PNEUMAX

SERIES 1800 ELECTRIC CYLINDERS

QUALITY AND PERFORMANCE

Index

Electric cylinders

Introduction 2

General 4

Characteristics 5

Codes 6

Overall dimensions 9

Technical data 12

Fixing 17

Sensors 30

Pneumax

Smart Technologies and Human Competence

Founded in 1976, **Pneumax S.p.A.** is today one of the leading, international manufacturers of components and systems for automation. It is at the fore front of a group comprised of **29 companies**, with over **850 employees** worldwide.

Ongoing investment in research and development has allowed **Pneumax** to continually expand its range of standard products and customised solutions, adding to the well-established pneumatic technology, a range of electric drive actuators and fluid control components.

The desire to provide the service and specific application skills has led to the creation of 3 business units, dedicated to Industrial Automation, Process Automation and Automotive sector.

Overall dimensions and technical information are provided solely for informative purposes and may be modified without notice

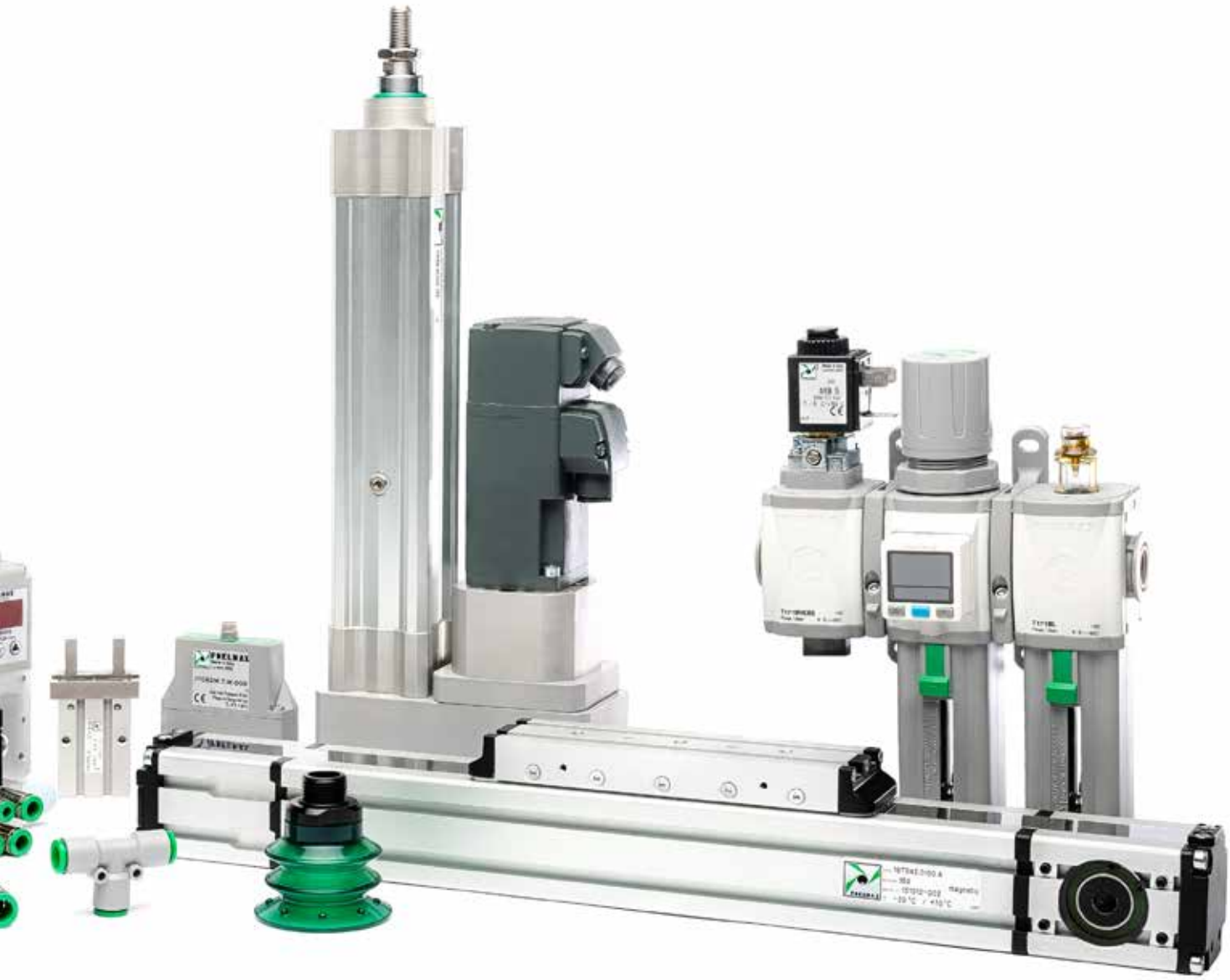

The ability to provide various technologies and solutions for each of our clients applications is the main objective of the Company, making Pneumax the ideal strategic partner.

What defines us is the "**Pneumax Business Attitude**", born out of the capacity to combine industry sectors, technology and our application skills via the clients collaboration with our business and product specialists.
The most effective solutions are studied around the TCO (Total cost of ownership) related to the entire life cycle of the product.
This represents the main Pneumax distinguishing factor.

Pneumatic technology

Electric actuation

Fluid control

ELECTRIC ACTUATION

Electric cylinders series 1800

- **Ø 32, 40, 50, 63**
- **Fixing interface ISO 15552**
- **Versions with linear or parallel motors**
- **SIEMENS brushless motors**
- **IP Rating IP65**
- **Anti-rotating piston**
- **Adapted for use with magnetic sensors**
- **A vast range of accessories and motor fixing interfaces**

The Series 1800 Electric cylinders offer additional functions to that of a standard pneumatic cylinder, with the possibility to totally manage the complete working cycle, with control over acceleration and deceleration and the ability stop in mid position with precision and repeatability to fractions of a millimetre.
The actuators are available four sizes, 32-40-50-63, with in-line or parallel mounted electric motors with a fixing interface according to ISO 15552 standard and with IP65 IP rating.
The motor drives a ball screw transmission that converts the motors rotary motion into a linear motion.
The internal piston is non-rotating with built in calibrated slides to reduce any torsional backlash of the piston rod and to obtain optimal precision for positioning.

The actuators are fitted with magnetic pistons for use with external sensors or external linear position transducers.
It is possible to access the ball screw through a hole in the barrel for the purpose of lubrication.
Motors: brushless SIEMENS (IP65), relativ encoder (100W, 400W, 750W, 1000W, 1500W, 2000W).
Versions with brake and positioning encoders are available upon request.
In the event of the customer wanting to use they're own electric motor, Pneumax can provide the required assembly kits upon request.
Servo Drives: SIEMENS 220 ... 240V 1AC/3AC; a version for multi-axis interpolation is available upon request.

Depending on the wiring, the motors even if of the same type, can rotate in different directions.
The moving direction of the piston rod depends on the direction of rotating ball screw.

Overall dimensions and technical information are provided solely for informative purposes and may be modified without notice

Construction characteristics

Mounting Standard	ISO 15552 (only for fixing interface)
Rod version	non rotation piston rod
Transmission type	ball screw
Rod	stainless steel
Head nut	stainless steel
Heads	anodised aluminuim
Profiled tube	anodised aluminuim

Operational characteristics	U.M.	Value
Environment temperature	°C	0/+60
Storage temperature	°C	-20/+60
IP Rating	-	IP65
Air relative humidity	%	90% (condensation not admitted)
Out of control impact at the end of the stroke	-	NOT ADMITTED (recommended addition to stroke min. 30mm)
Magnetic piston	-	yes

Technical characteristics		U.M	Size 32			Size 40			Size 50			Size 63		
Ball screw pitch		mm	5	10	12	5	10	16	5	10	20	5	10	25
Ball screw diameter		mm	12			16			20			25		
Maximum torque admitted	In-line motor	Nm	1,8	3,0	4,1	5,8	7,0	6,1	7,8	13,1	22,0	12,2	22,6	34,3
	Parallel motor										15,0		20,0	20,0
Friction torque		Nm	0,1			0,2			0,3			0,5		
Coefficient of dynamic axial load		N	4.700	4.700	5.450	15.200	9.600	9.600	17.650	18.300	12.350	23.500	27.150	13.600
Admitted axial load		N	1.950	1.650	1.900	6.550	3.900	2.150	8.750	7.350	6.200	13.750	12.750	7.750
Efficiency		-	0,9											
Maximum stroke		mm	800						1000			1200		
Minimum stroke		mm	30											
Maximum admitted rotary speed		rpm	(see the graphs in the Technical data section)						(see the graphs in the Technical data section)					
Maximum admitted linear speed		m/s	(see the graphs in the Technical data section)						(see the graphs in the Technical data section)					
Maximum admitted acceleration		m/s^2	5	13	15	4	12	20	4	10	20	4	10	20
Repetition accurancy		mm	±0.015											
Maximum axial play		mm	≤0,02			≤0,04			≤0,04	≤0,05	≤0,04	≤0,04	≤0,05	≤0,04
Maximum rod rotation angle		(°)	±0.25											

ELECTRIC ACTUATION

The following combinations are available to order:

Cylinder which can be assembled with an IN-LINE motor	Cylinder which can be assembled with a PARALLEL mounted motor	Cylinder + IN-LINE motor	Cylinder + PARALLEL motor

Motors	Servo Drives, filters, cables	Motors fixing kits (in-line or parallel version)

Fixing and accessories

Cylinder ordering codes (with or without motor)

18A . _ . _ . _ _ _ _ . _ . _ _ _ _

Motor Assembly Position	
A	IN-LINE position
B	PARALLEL position (transmission ratio: 1:1)

Size	
A	32
B	40
C	50
D	63

Stroke (mm)*
Size 32 (max. 800)
Size 40 (max. 800)
Size 50 (max. 1000)
Size 63 (max. 1200)

Ball screw pitch	
A	pitch 5
B	pitch 10
C	pitch 12 (only Ø32)
D	pitch 16 (only Ø40)
E	pitch 20 (only Ø50)
F	pitch 25 (only Ø63)

Motor			
0000		Without motor	
BRUSHLESS SIEMENS			
B001	200 ... 240V 3AC - IP65 - SIEMENS	motor cod. **1800B0400801** 0,32 Nm - 100W	available on size 32 and 40
B002		motor cod. **1800B0601401** 1,27 Nm - 400W	available on size 32, 40 and 50
B003		motor cod. **1800B0801900** 2,39 Nm - 750W	available on size 40, 50 and 63
B004		motor cod. **1800B0801901** 3,18 Nm - 1000W	available on size 50 and 63
B005		motor cod. **1800B1001900** 4,78 Nm - 1500W	available on size 50 and 63
B006		motor cod. **1800B1001901** 6,37 Nm - 2000W	available on size 63

SIEMENS motors with brake or absolute encoder are available upon request.

*** Stroke definition**
To avoid damage, it is important to prevent collision at the end of the stroke of the piston. Therefore, add an additional 30mm to the required stroke length.

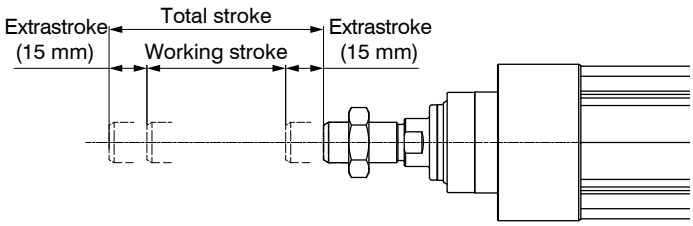

Overall dimensions and technical information are provided solely for informative purposes and may be modified without notice

BRUSHLESS SIEMENS MOTORS with incremental encoder without brake (Motors with absolute encoders or brake are also available upon request)							
Ordering code		**1800B0400801**	**1800B0601401**	**1800B0801900**	**1800B0801901**	**1800B1001900**	**1800B1001901**
Torque	rated	0,32 Nm	1,27 Nm	2,39 Nm	3,18 Nm	4,78 Nm	6,37 Nm
	maximum	0,96 Nm	3,82 Nm	7,20 Nm	9,54 Nm	14,30 Nm	19,10 Nm
Usable cylinders sizes		32 and 40	32, 40 and 50	40, 50 and 63	50 and 63		63
rpm		5000 max, 3000 rated					
Rated voltage		200 ... 240V 1AC/3AC			200 ... 240V 3AC		
Rated power		100 W	400 W	750 W	1.000 W	1.500 W	2.000 W
Moment of inertia (10^{-4}Kgm^2)		0,052	0,351	0,897	1,15	2,04	2,62
Temperature	storage	-20°C ... +65°C (-4°F ... +149°F)					
	operation	0°C ... +40°C (-32°F ... +104°F)					
Thermal class		B (130°C/266°F)					
Relative atmospheric humidity (storage and operation)		90% a 30°C (86°F) (no condensation)					
IP Rating		Motor IP65 - Connector IP20				IP65	
Weight (g)		630	1.460	2.800	3.390	5.350	6.560

SERVO DRIVES SIEMENS							
Ordering code		**1800AZ0001**	**1800AZ0003**	**1800AZ0004**	**1800AZ0005**	**1800AZ0006**	**1800AZ0007**
Usable motor		1800B0400801	1800B0601401	1800B0801900	1800B0801901	1800B1001900	1800B1001901
Line frequency		50Hz / 60Hz ±10 %					
Communication		n°2 PROFINET communication with a PLC (RJ45)					
Maximum motor power		100 W	400 W	750 W	1.000 W	1.500 W	2.000 W
Frame size		FSA	FSB	FSC	FSD		
Dimensions	Height	45mm	55mm	80mm	95mm		
	Width	170mm					
	Depth	170mm		195mm			
Output current	rated	1,2A	2,6A	4,7A	6,3A	10,6A	11,6A
	max.	3,6A	7,8A	14,1A	18,9A	31,8A	34,8A
Line supply voltage		200 ... 240V 1AC/3AC (-15%/+10 %)			200 ... 240V 3AC (-15%/+10%)		
Line capacity	single-phase 1AC	0,5kVA	1,2kVA	2kVA	-	-	-
	three-phase 3AC	0,5kVA	1,1kVA	1,9kVA	2,7kVA	4,2kVA	4,6kVA
Cooling		Natural cooling			Fan cooling		
Weight (g)		1.100	1.200	2.000	2.500		
USB inerfaces		mini USB					
Digital outputs		4 inputs, NPN/PNP; 2 outputs, NPN/PNP					
SD card slot		micro Sd					
Safety functions		STO (safe torque off) SIL2					

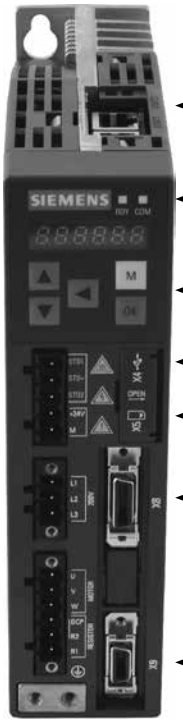

ELECTRIC ACTUATION

FILTER						
Ordering code	1800FT0001 (for 3AC)			1800FT0002 (for 3AC)		
	1800FT0003 (for 1AC)			/		
Usable motor	1800B0400801	1800B0601401	1800B0801900	1800B0801901	1800B1001900	1800B1001901

3Mtr Motor Cable ORANGE (3, 5, 10, and 20Mtr cables are available upon request)						
Ordering code	1800CM000103				1800CM000203	
Usable motor	1800B0400801	1800B0601401	1800B0801900	1800B0801901	1800B1001900	1800B1001901
IP Rating	IP20				IP65	

3Mtr Encoder Cable GREEN (3, 5, 10, and 20Mtr cables are available upon request)						
Ordering code	1800CE000103				1800CE000203	
Usable motor	1800B0400801	1800B0601401	1800B0801900	1800B0801901	1800B1001900	1800B1001901
IP Rating	IP20				IP65	

SIEMENS motor fixing KITS code

Cylider size	MOTOR ordering code	Fixing KITS ordering code			
		IN LINE version	Weight (g)	PARALLEL version	Weight (g)
32	1800B0400801	18KL0001	250	18KP0001	200
	1800B0601401	18KL0002	290	18KP0002	240
40	1800B0400801	18KL0003	320	18KP0001	200
	1800B0601401	18KL0004	360	18KP0002	240
	1800B0801900	18KL0005	510	18KP0003	390
50	1800B0601401	18KL0006	517	18KP0004	485
	1800B0801900	18KL0007	890	18KP0005	655
	1800B0801901	18KL0007	890	18KP0005	655
	1800B1001900	18KL0008	1390	18KP0006	1150
63	1800B0801900	18KL0009	1090	18KP0005	655
	1800B0801901	18KL0009	1090	18KP0005	655
	1800B1001900	18KL0010	1590	18KP0006	1150
	1800B1001901	18KL0010	1590	18KP0006	1150

In the event of the customer wanting to use they're own motor, assembly kits for different brands of motor are available upon request. Please complete the table below and contact our technical office.

ØA	
A1	
A2	

ØB	
B1	

ØD	
ØD1	
D2	

E	
EE	

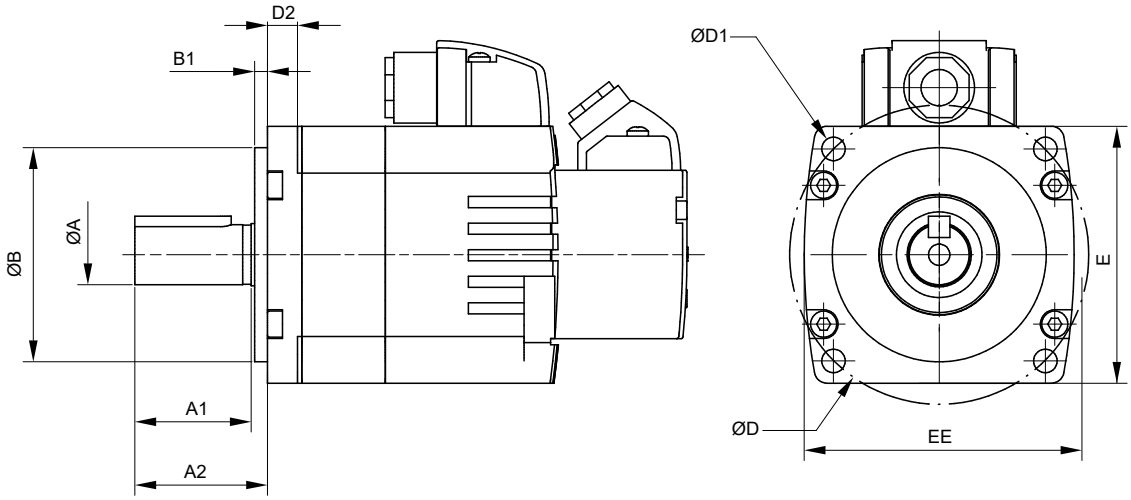

Overall dimensions and technical information are provided solely for informative purposes and may be modified without notice

Cylinder dimensions without motor

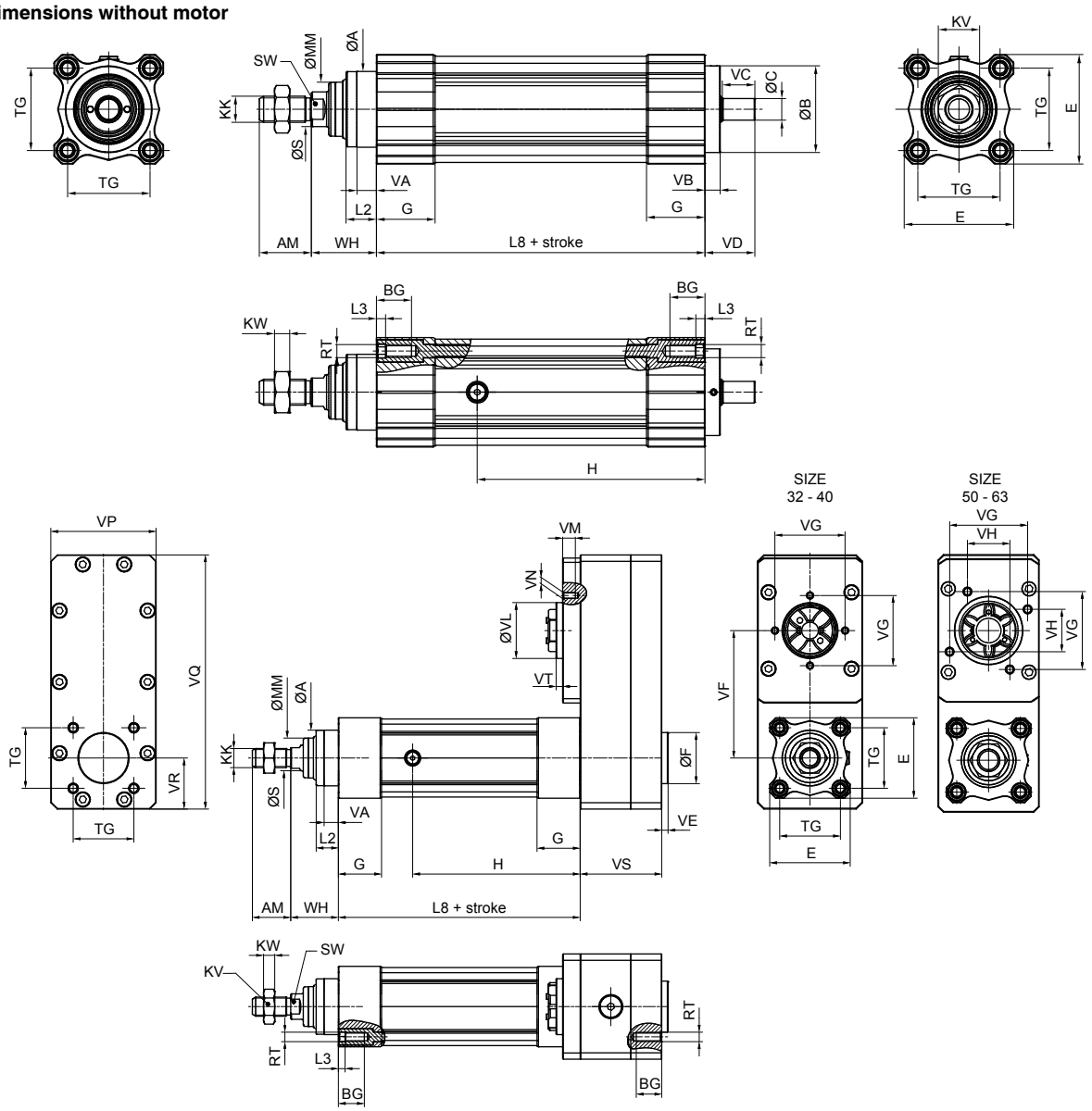

Size	A (d11)	AM	B +0 (- 0.03)	BG	C (h7)	E	F (d11)	G	H	KK	KV	KW	L2	L3	L8	MM	RT	S	SW
32	30	22	34	16	8	45	30	27	86,75	M10x1,25	17	6	12	4	130,5	20	M6	14	12
40	35	24	40	16	10	50,5	35	27	105	M12x1,25	19	7	14	4	151,5	25	M6	16	13
50	40	32	50	18	12	62	40	33	118,75	M16x1,5	24	8	20	5	175	30	M8	19	17
63	45	32	60	18	15	72	45	33	126,75	M16x1,5	24	8	20	5	189	32	M8	19	17

Size	TG	VA	VB	VC	VD	VE	VF	VG	VH	VL	VM	VN	VP	VQ	VR	VS	VT	WH
32	32,5	8	7	12	20	4	60	44	/	35	8	M4	53	121	26,5	50,2	4	26
40	38	9	7	15	23	4	80	44	/	35	8	M4	66	159,5	32	51,2	4	30
50	46,5	9	9	18	28	4	95	57	31	50	9	M6	74	188,5	38	67,2	9	37
63	56,5	9	9	22,5	32,5	4	104	57	31	50	9	M6	86	209	43	67	9	37

In-line version weight (g)			
0 Stroke			Weight every mm
Size	Pitch	g	g
32	5	744	3,2
	10	637	
	12	734	
40	5	1036	4,7
	10	1056	
	16	996	
50	5	1775	7
	10	1817	
	20	1775	
63	5	2499	8,7
	10	2600	
	25	2559	

Parallel version weight (g)			
0 Stroke			Weight every mm
Size	Pitch	g	g
32	5	1526	3,2
	10	1419	
	12	1516	
40	5	2310	4,7
	10	2330	
	16	2270	
50	5	3870	7
	10	3912	
	20	3870	
63	5	5132	8,7
	10	5233	
	25	5192	

ELECTRIC ACTUATION

Cylinder dimensions with BRUSHLESS SIEMENS motor

Motors with power <1500W

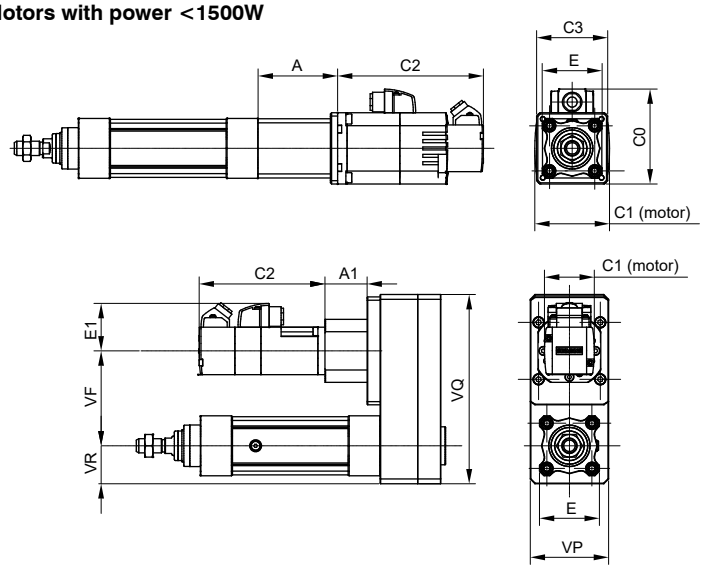

Motors with power ≥1500W

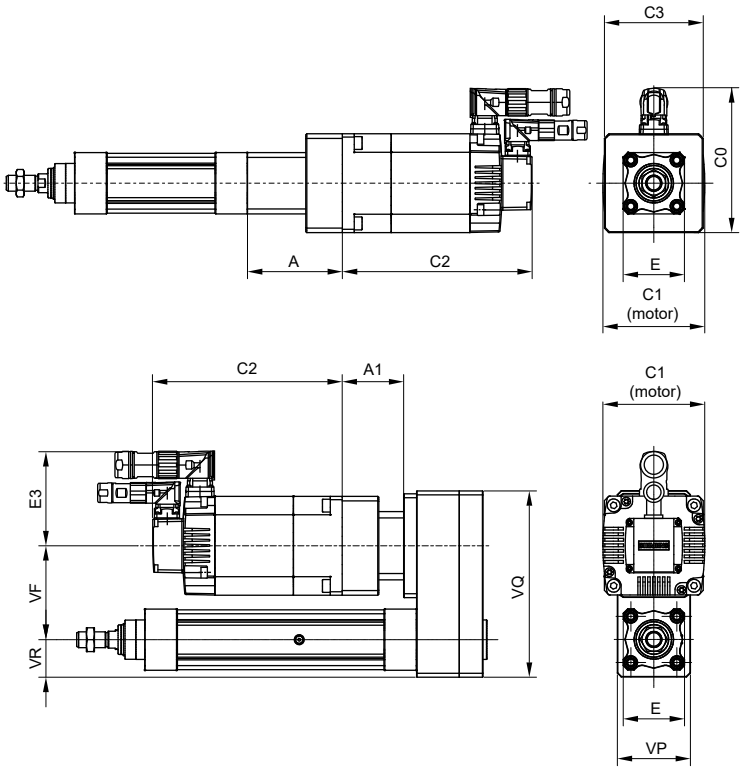

Cylinders weight + Motors (g)					
Size	Motor	Pitch	0 Stroke		Weight every mm (g)
			In-line version (g)	Parallel version (g)	
32	0,32 Nm	5	1624	2356	3,2
	100W	10	1517	2249	
	1800B0400801	12	1614	2346	
	1,27 Nm	5	2494	3226	
	400W	10	2387	3119	
	1800B0601401	12	2484	3216	
40	0,32 Nm	5	1986	3140	4,7
	100W	10	2006	3160	
	1800B0400801	16	1946	3100	
	1,27 Nm	5	2856	4010	
	400W	10	2876	4030	
	1800B0601401	16	2816	3970	
	2,39 Nm	5	4346	5500	
	750W	10	4366	5520	
	1800B0801900	16	4306	5460	
50	1,27 Nm	5	3752	5815	7
	400W	10	3794	5857	
	1800B0601401	20	3752	5815	
	2,39 Nm	5	5465	7325	
	750W	10	5507	7367	
	1800B0801900	20	5465	7325	
	3,18 Nm	5	6055	7915	
	1000W	10	6097	7957	
	1800B0801901	20	6055	7915	
	4,78 Nm	5	8515	10370	
	1500W	10	8557	10412	
	1800B1001900	20	8515	10370	
63	2,39 Nm	5	6389	8587	8,7
	750W	10	6490	8688	
	1800B0801900	25	6449	8647	
	3,18 Nm	5	6979	9177	
	1000W	10	7080	9278	
	1800B0801901	25	7039	9237	
	4,78 Nm	5	9439	11632	
	1500W	10	9540	11733	
	1800B1001900	25	9499	11692	
	6,37 Nm	5	10649	12842	
	2000W	10	10750	12943	
	1800B1001901	25	10709	12902	

Size	Motor	A	A1	C0	C1	C2	C3	E	E1	E3	VF	VP	VQ	VR
32	cod. **1800B0400801** (0,32 Nm - 100W)	58	35	62,5	42	106	45	45	40	/	60	53	121	26,5
	cod. **1800B0601401** (1,27 Nm - 400W)	64	41,5	80	63	123	60	45	50	/	60	53	121	26,5
40	cod. **1800B0400801** (0,32 Nm - 100W)	61	35	65	40	106	50	50,5	40	/	80	66	159,5	32
	cod. **1800B0601401** (1,27 Nm - 400W)	67	41,5	80	63	123	60	50,5	50	/	80	66	159,5	32
	cod. **1800B0801900** (2,39 Nm - 750W)	73	47,5	100	83	139	80	50,5	60	/	80	66	159,5	32
50	cod. **1800B0601401** (1,27 Nm - 400W)	72	46	81	63	123	62	62	50	/	95	74	188,5	38
	cod. **1800B0801900** (2,39 Nm - 750W)	86	52	100	83	139	80	62	60	/	95	74	188,5	38
	cod. **1800B0801901** (3,18 Nm - 1000W)	86	52	100	83	159	80	62	60	/	95	74	188,5	38
	cod. **1800B1001900** (4,78 Nm - 1500W)	96	62	171	103	192	100	62	/	98	95	74	188,5	38
63	cod. **1800B0801900** (2,39 Nm - 750W)	86	52	100	83	139	80	72	60	/	104	86	209	43
	cod. **1800B0801901** (3,18 Nm - 1000W)	86	52	100	83	159	80	72	60	/	104	86	209	43
	cod. **1800B1001900** (4,78 Nm - 1500W)	96	62	171	103	192	100	72	/	98	104	86	209	43
	cod. **1800B1001901** (6.37 Nm - 2000W)	96	62	171	103	216	100	72	/	98	104	86	209	43

Overall dimensions and technical information are provided solely for informative purposes and may be modified without notice

BRUSHLESS SIEMENS motors dimensions

Motors with power <1500W

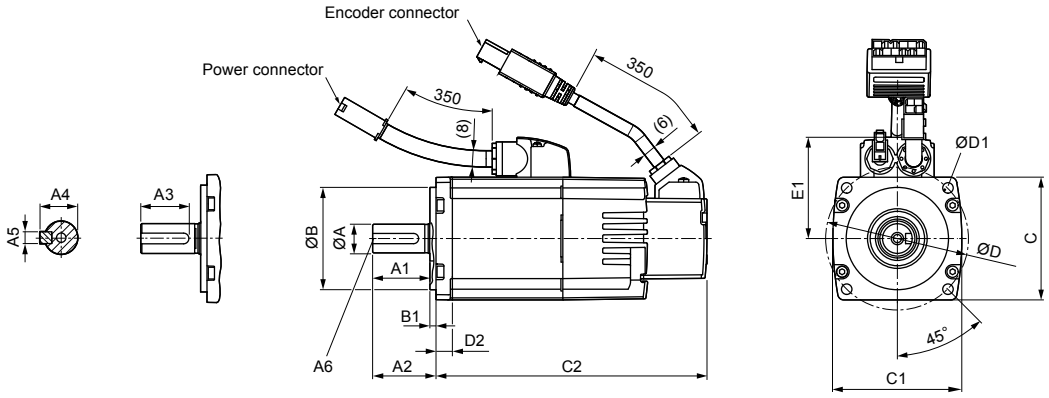

Motors with power ≥1500W

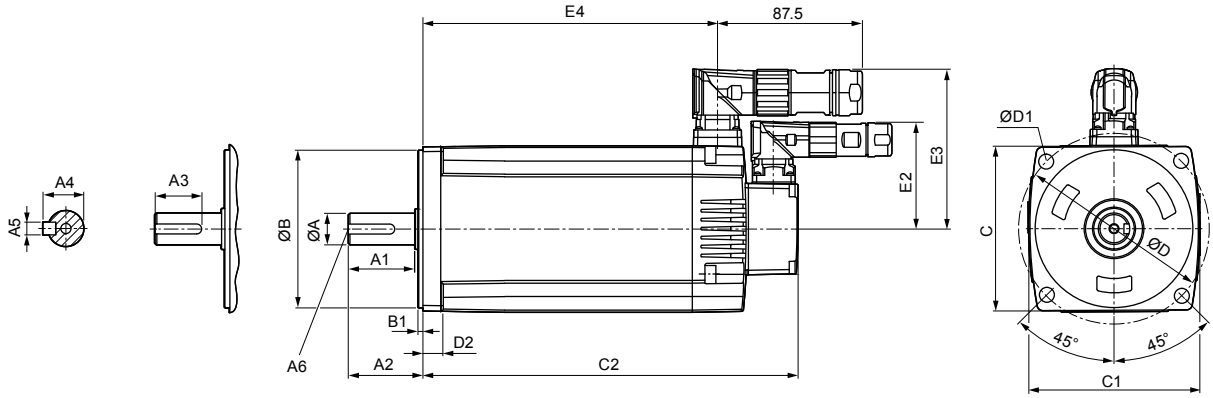

	Ordering code	1800B0400801	1800B0601401	1800B0801900	1800B0801901	1800B1001900	1800B1001901
	Rated torque	0,32 Nm	1,27 Nm	2,39 Nm	3,18 Nm	4,78 Nm	6,37 Nm
	Power	100 W	400 W	750 W	1.000 W	1.500 W	2.000 W
Overall dimensions	ØA	8 h6	14 h6	19 ($^{+0}_{-0.013}$)	19 ($^{+0}_{-0.013}$)	19 ($^{+0}_{-0.013}$)	19 ($^{+0}_{-0.013}$)
	A1	22	26	30	30	40	40
	A2	25	31	35	35	45	45
	A3	17,5	22,5	28	28	28	28
	A4	9	16	21,5	21,5	21,5	21,5
	A5	3	5	6	6	6	6
	A6	M3x8	M4x15	M6x16	M6x16	M6x16	M6x16
	ØB	30 ($^{+0}_{-0.02}$)	50 ($^{+0}_{-0.03}$)	70 ($^{+0}_{-0.03}$)	70 ($^{+0}_{-0.03}$)	95 ($^{+0}_{-0.03}$)	95 ($^{+0}_{-0.03}$)
	B1	2,5 ($^{+0}_{-0.2}$)	3 ($^{+0}_{-0.2}$)	3 ($^{+0}_{-0.3}$)	3 ($^{+0}_{-0.3}$)	3 ($^{+0}_{-0.3}$)	3 ($^{+0}_{-0.3}$)
	C	40	60	80	80	100	100
	C1	42	63	83	83	103	103
	C2	106	123	139	159	192	216
	ØD	Ø46	Ø70	Ø90	Ø90	Ø115	Ø115
	ØD1	4,5	5,5	7	7	9	9
	D2	6	8	8	8	12	12
	E1	40	50	60	60	/	/
	E2	/	/	/	/	65,5	65,5
	E3	/	/	/	/	98	98
	E4	/	/	/	/	143,5	167,5
	Weight (g)	630	1460	2800	3390	5350	6560

ELECTRIC ACTUATION

Axial load admissible as a function of stroke

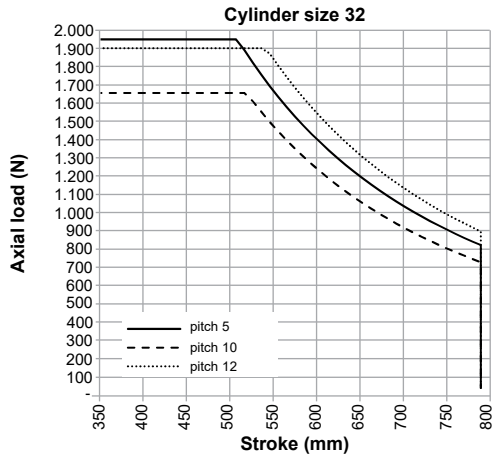

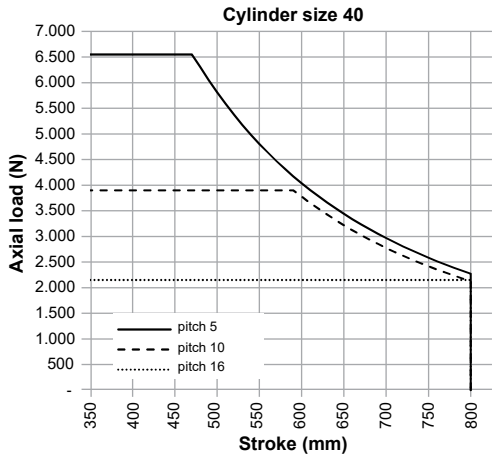

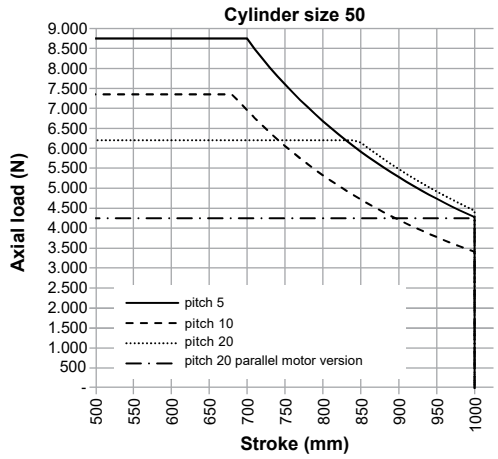

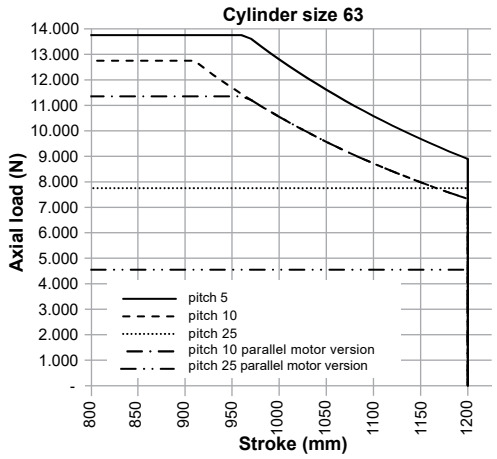

Overall dimensions and technical information are provided solely for informative purposes and may be modified without notice

Maximum RPM subject to stroke

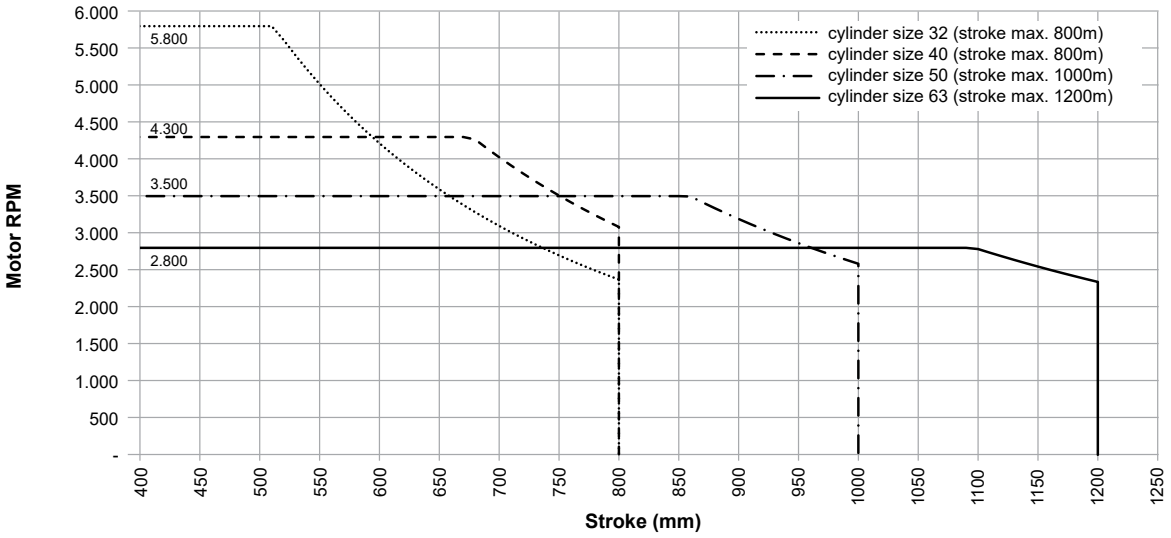

Speed: According to Motor (RPM)

Please note: take in consideration the maximum number of revolutions shown in the previous graph.

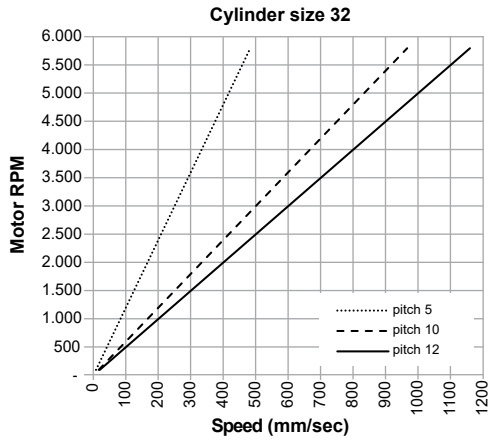

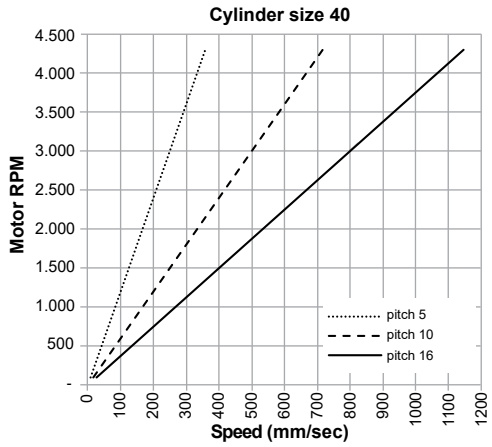

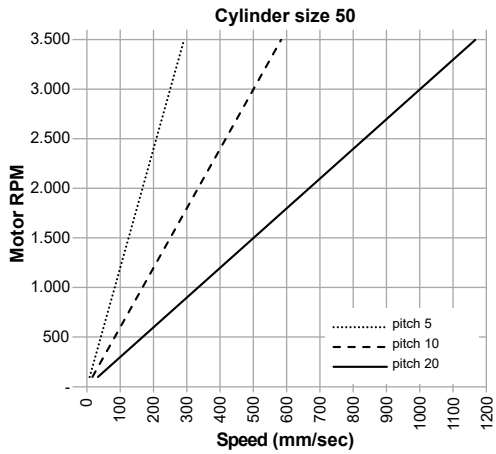

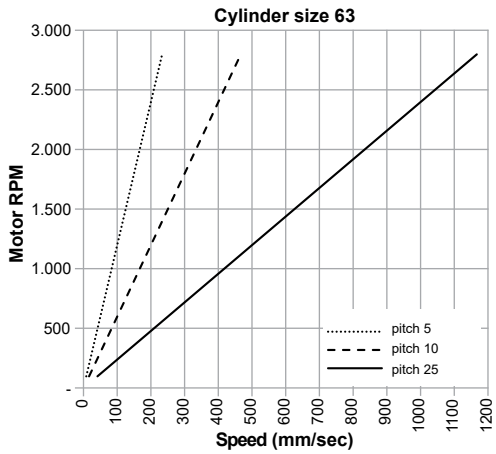

ELECTRIC ACTUATION

Admissible axial load as a function of stroke

Power Supply Voltage: 230 VAC
Torque values below the rated torque line are continuously rated.
Torque values below the maximum torque line but above the rated torque line are momentary values not continuous.

Motor cod. 1800/B0400801

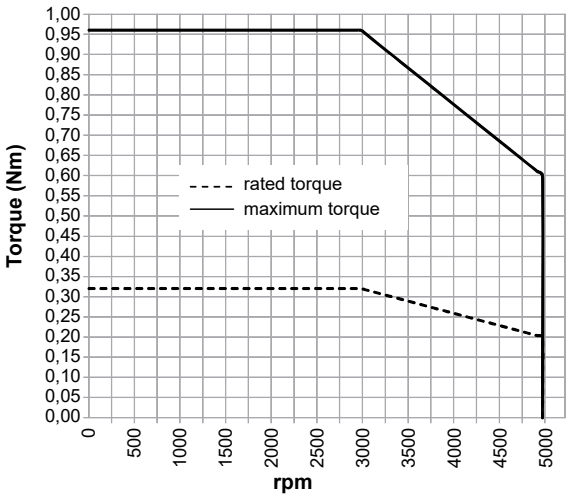

Motor cod. 1800/B0601401

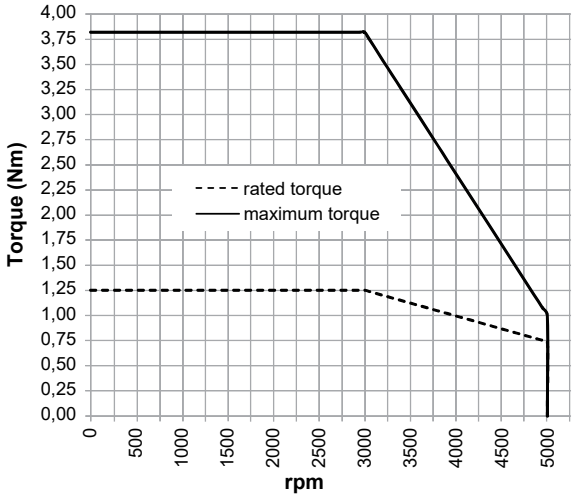

Motor cod. 1800/B0801900

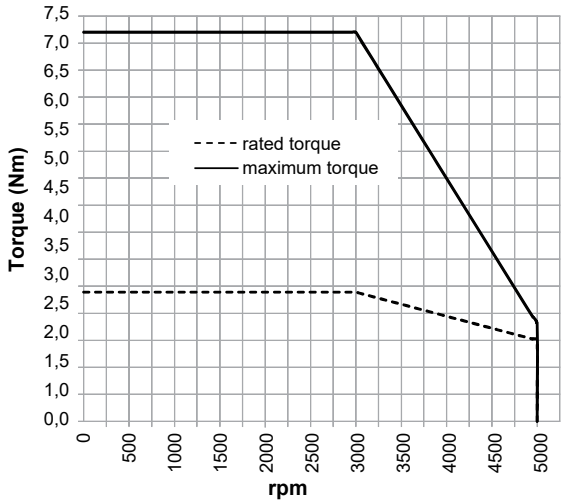

Motor cod. 1800/B0801901

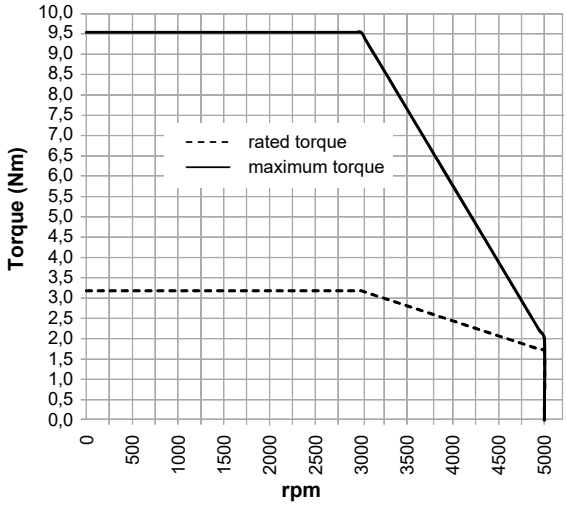

Motor cod. 1800/B1001900

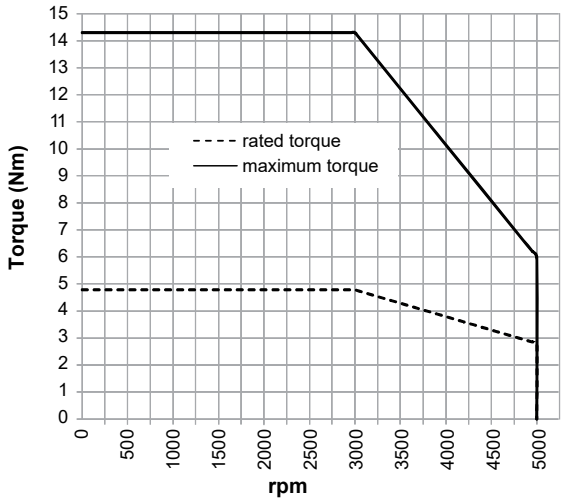

Motor cod. 1800/B1001901

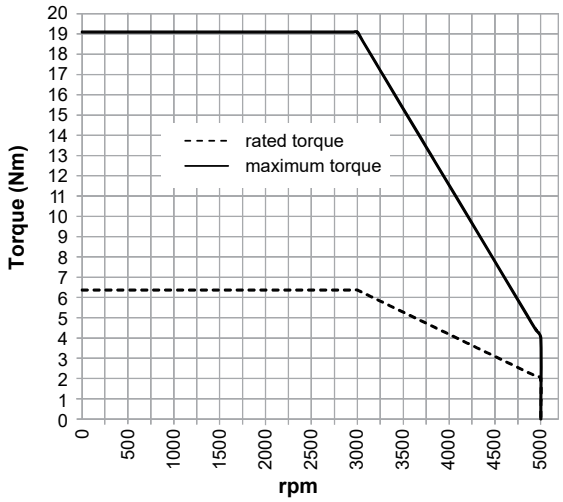

Overall dimensions and technical information are provided solely for informative purposes and may be modified without notice

Cylinder thrust according to the motor torque

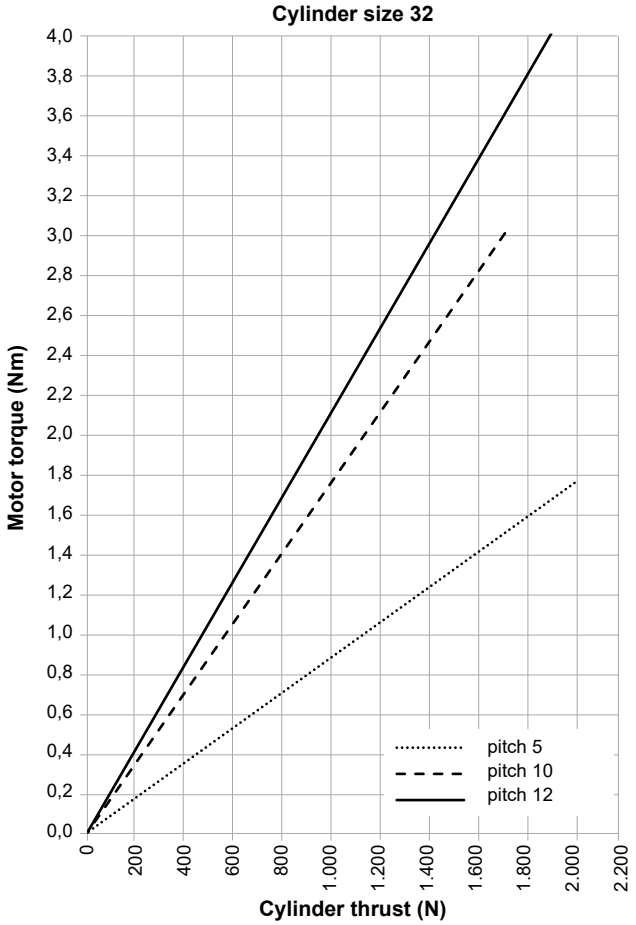

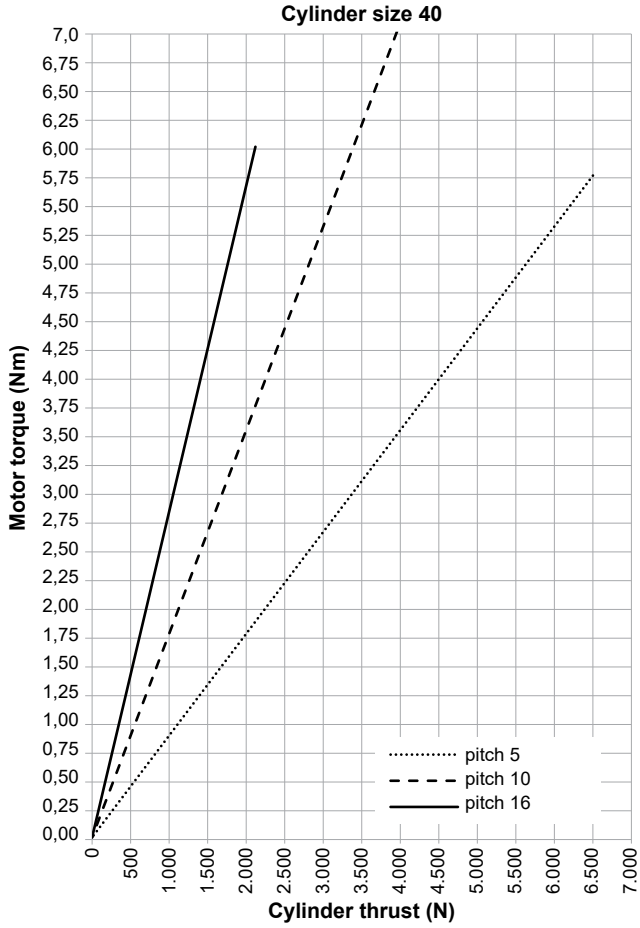

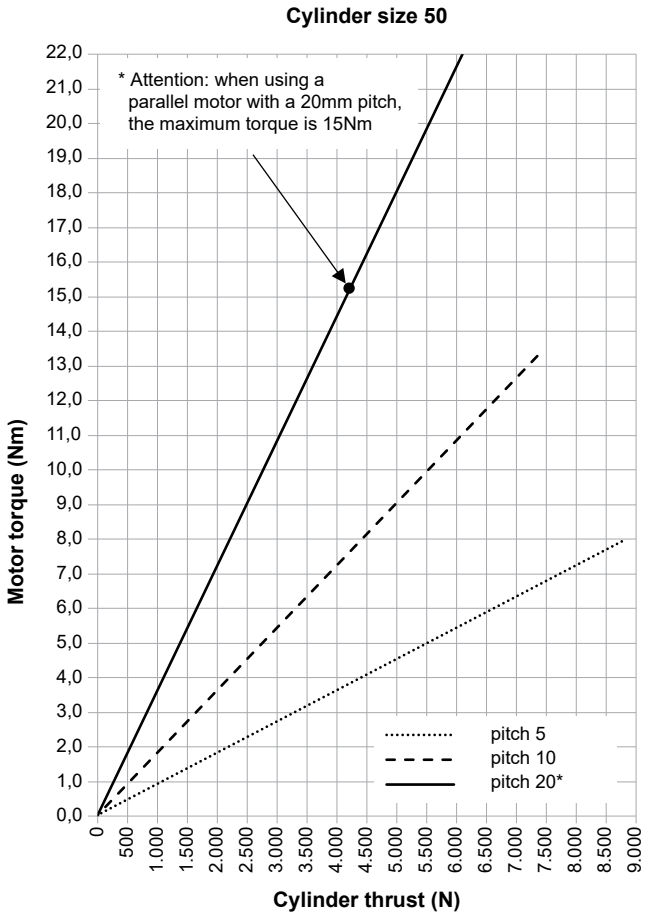

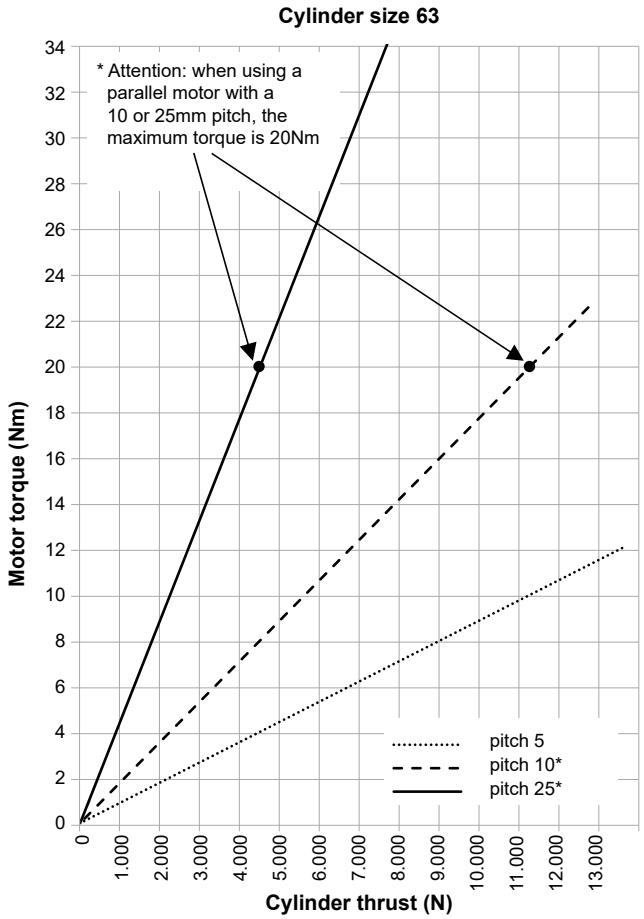

ELECTRIC ACTUATION

Service life

Please note: the actual duration may vary depending on the application

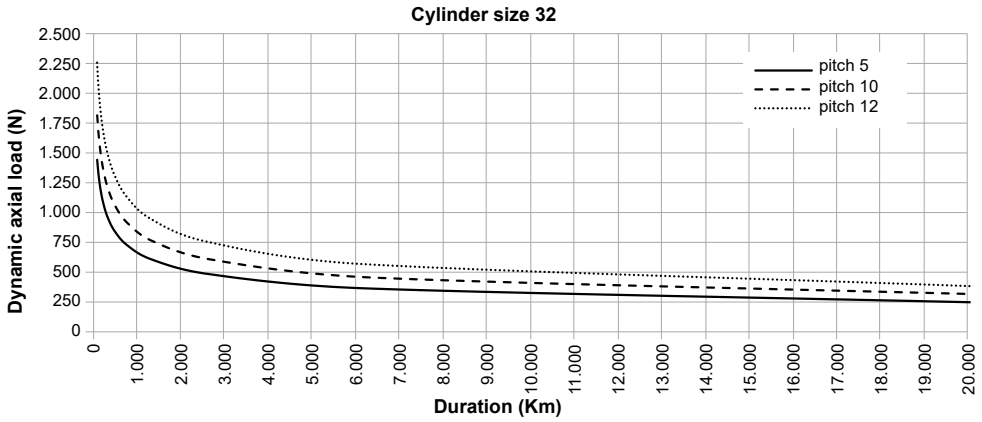

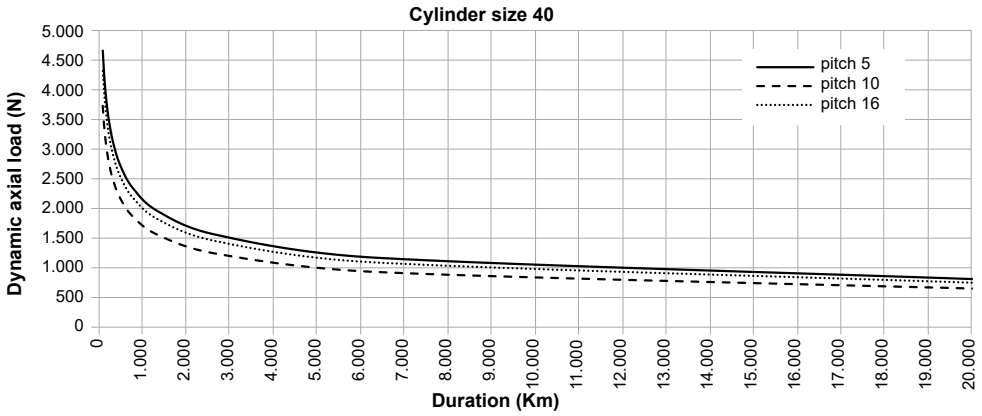

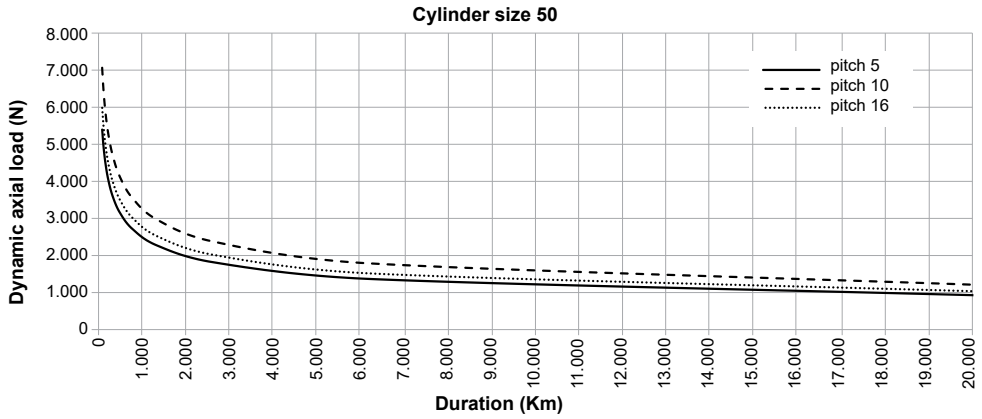

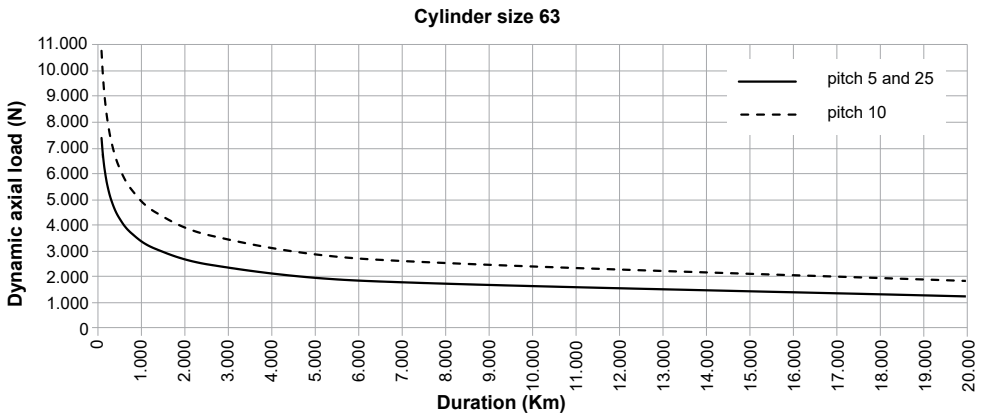

Overall dimensions and technical information are provided solely for informative purposes and may be modified without notice

Cylinder fixing

The cylinder fixing interface (mounting holes and piston rod dimensions) conform to the ISO 15552 Standard.
Therefore the cylinders can be fixed with:

- the threaded holes (pos.1 and pos.4)
- the thread on the rod (pos.3)
- on the barrel (pos.5 and pos.2)

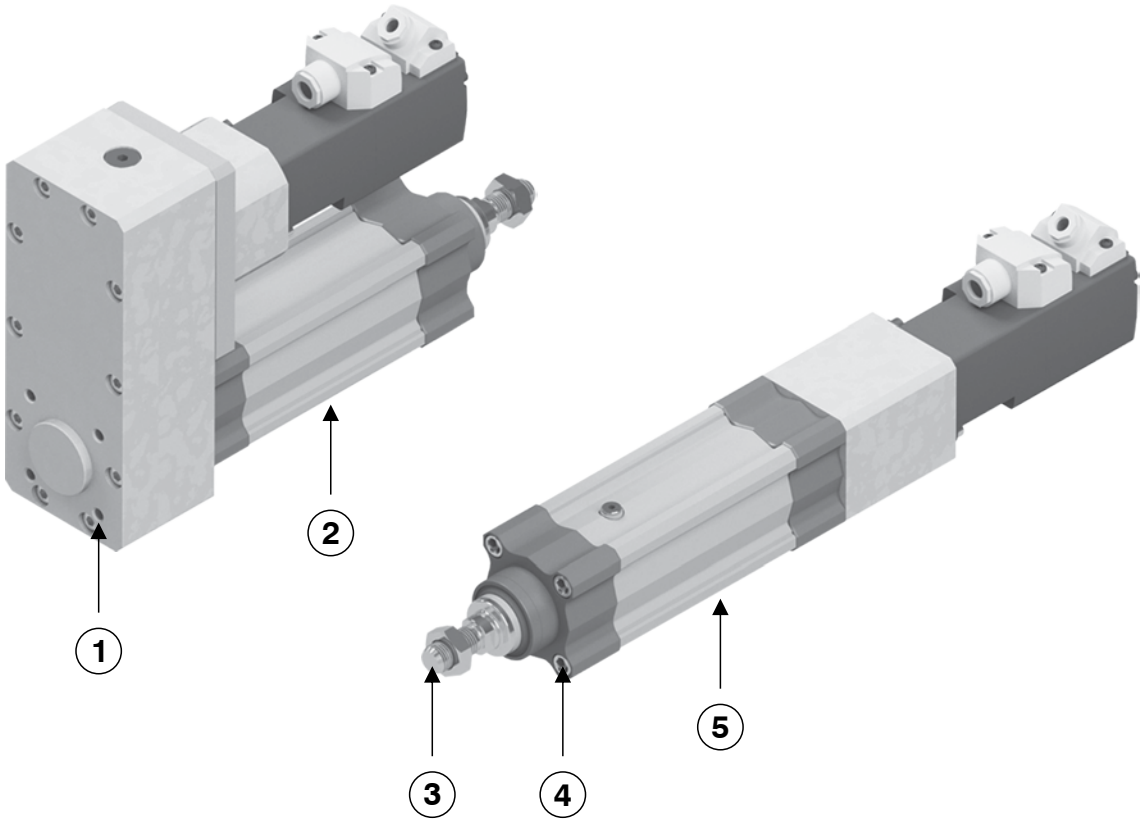

The following page shows all the fixing devices suitable for fixing the cylinders to the in-line or parallel mounted motors.

Fixing devices available

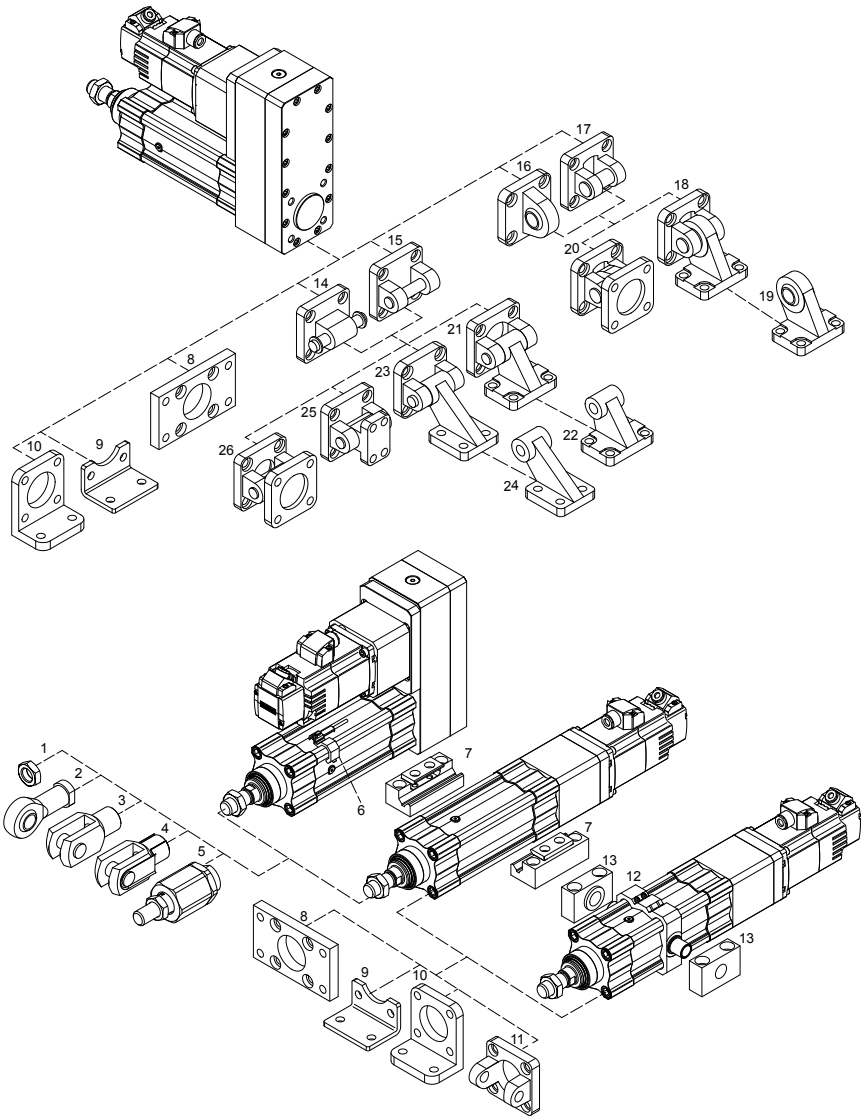

Position	Description	Aluminium	Steel
1	Rod nut	/	1320.Ø.18F
2	Ball joint	/	1320.Ø.32F
3	Fork	/	1320.Ø.13F
4	Fork with clips	/	1320.Ø.13/1F
5	Self-aligning joint	/	1320.Ø.33F
6	Sensor bracket	1320._S	/
7	Intermediate supports	1800.Ø.02F	
8	Flange (MF1)	1390.Ø.03FP	1380.Ø.03F
9	Short mounting foot brackets (MS1)	/	1320.Ø.05/1F
10	Standard mounting foot brackets	1320.Ø.05F	/
11	Front clevis (not according to standard ISO 15552)	1380.Ø.08F	1320.Ø.19F
12	Intermediate trunnion	1320.Ø.12BF	1320.Ø.12F
13	Support for intermediate trunnion	1320.Ø.12/1F	/
14	Rear male clevis (MP4)	1380.Ø.09/1F	1320.Ø.21F
15	Rear female clevis (MP2)	1380.Ø.09F	1320.Ø.20F
16	Rear male clevis (with jointed head - MP6)	1380.Ø.15F	1320.Ø.25F
17	Rear narrow clevis (AB6)	1380.Ø.30F	1320.Ø.29F
18	Complete square angle trunnion (pos.17+19)	/	1320.Ø.27F
19	Simple square counter clevis	/	1320.Ø.28F
20	Square angle trunnion with jointed head (pos.16+17)	1380.Ø.36F	1320.Ø.26F
21	Square angle trunnion (AB7) (pos.15+22)	1380.Ø.35F	1320.Ø.23F
22	Simple square counter clevis	1320.Ø.11/2F	1320.Ø.24F
23	Simple rear trunnion with support brackets (pos.24+15)	1380.Ø.11F	/
24	Simple square counter clevis	1320.Ø.11/1F	/
25	Standard trunnion	1380.Ø.10F	/
26	Standard complete trunnion (pos.14+15)	1380.Ø.22F	1320.Ø.22F

Overall dimensions and technical information are provided solely for informative purposes and may be modified without notice

Front flange (MF1)

Plate which allows anchorage of the cylinder at a right angle to the plane.

Ordering code:

Aluminium	**1390.Ø.03FP**
Steel	**1380.Ø.03F**

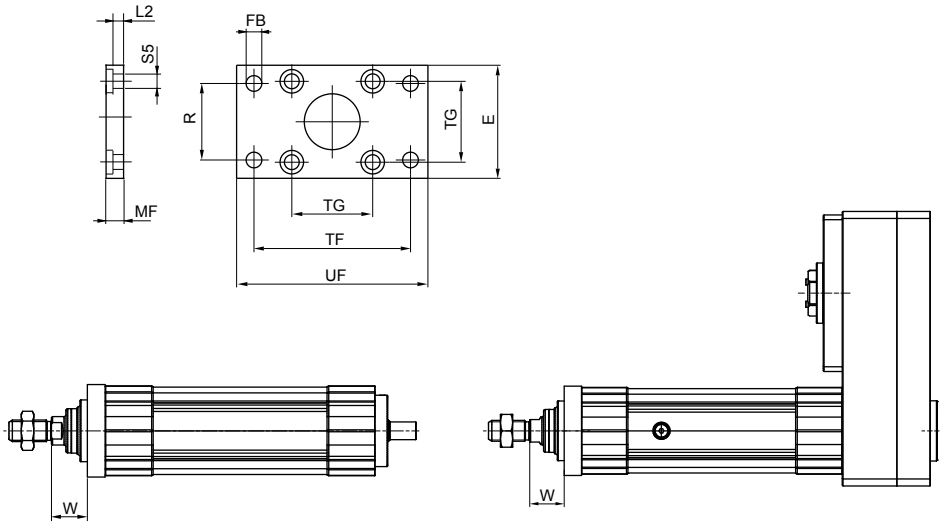

Size	E	FB (H 13)	MF (JS 14)	R (JS 14)	TF (JS 14)	TG	UF	W	L2	S5	Weight (g)	
											Steel	Aluminium
32	45	7	10	32	64	32,5	80	16	5	6,6	190	60
40	52	9	10	36	72	38	90	20	5	6,6	250	69
50	65	9	12	45	90	46,5	110	25	6,5	9	480	130
63	75	9	12	50	100	56,5	120	25	6,5	9	620	170

Standard mounting foot brackets

Elements used to anchor the cylinder parallel to the mounting plane. They are made of cast aluminium, painted black.

Ordering code: 1320.Ø.05F

Aluminium	1 piece

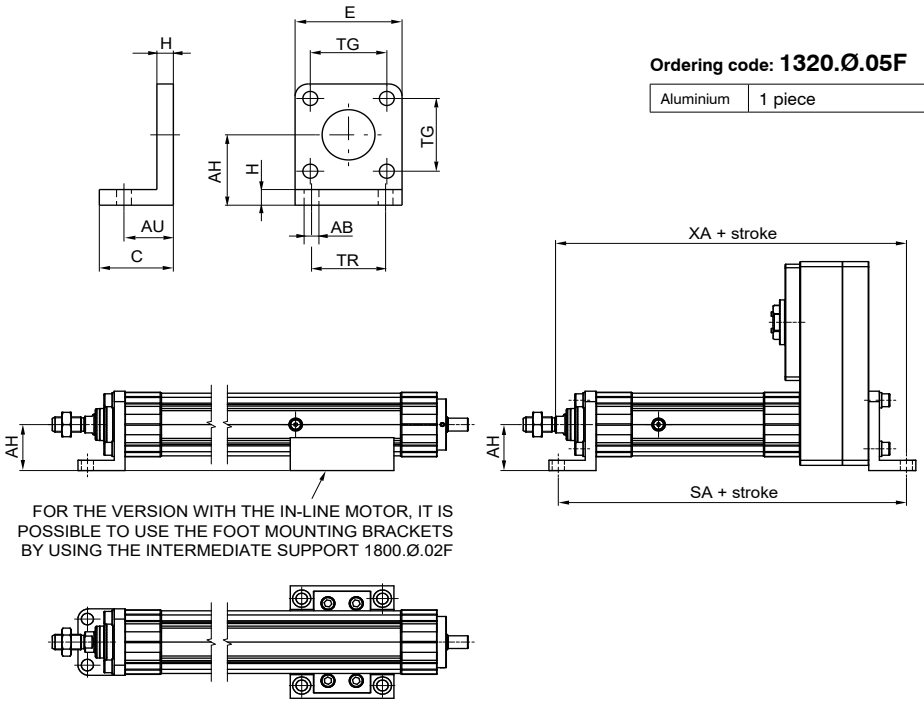

FOR THE VERSION WITH THE IN-LINE MOTOR, IT IS POSSIBLE TO USE THE FOOT MOUNTING BRACKETS BY USING THE INTERMEDIATE SUPPORT 1800.Ø.02F

Size	AB (H 14)	AH (JS 15)	AU (±0,2)	C	E	H	SA	TG	TR (JS 14)	XA	Weight (g)
32	7	32	24	35	45	8	228.7	32.5	32	230.7	45
40	9	36	28	35	52	8	258.7	38	36	260.7	65
50	9	45	32	45	65	10	306.2	46.5	45	311.2	140
63	9	50	32	45	75	10	320	56.5	50	325	175

ELECTRIC ACTUATION

Short mounting foot brackets (in sheet metal MS1)

Elements used to anchor the cylinder parallel to the mounting plane. They are made of steel, and painted black.

Ordering code: 1320.Ø.05/1F

Steel	(1 piece)

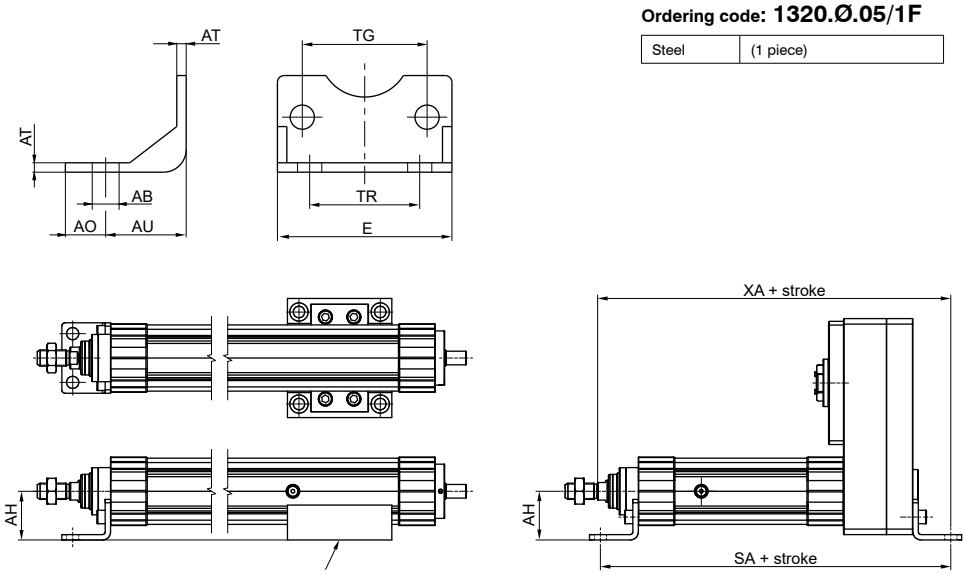

FOR THE VERSION WITH THE IN-LINE MOTOR, IT IS POSSIBLE TO USE THE FOOT MOUNTING BRACKETS BY USING THE INTERMEDIATE SUPPORT 1800.Ø.02F

Size	AB (H 14)	AH (JS 15)	AU (±0.2)	AO (±0.2)	E	AT	SA	TG	TR (JS 14)	XA	Weight (g)
32	7	32	24	11	45	4	228.7	32,5	32	230.7	65
40	9	36	28	8	52	4	258.7	38	36	260.7	80
50	9	45	32	15	65	5	306.2	46,5	45	311.2	170
63	9	50	32	13	75	5	320	56,5	50	325	190

Front clevis (not specified by ISO-VDMA standards)

Used to mount the cylinder either parallel or at a right angle to the mounting plane; allows the cylinder to self-align under load. Made of die-cast aluminium alloy or steel (see ordering code) and painted black.

Ordering code:

Aluminium	**1380.Ø.08F**
Steel	**1320.Ø.19F**

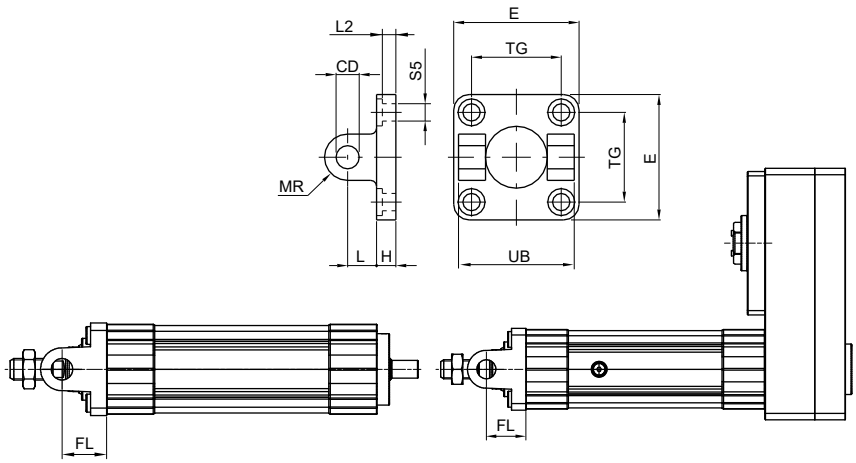

Size	CD (H9)	E		FL (±0,2)	H		L		MR	TG	UB (h14)	L2 (±0,5)	S5 (H13)	Weight (g)	
		Aluminium	Steel		Aluminium	Steel	Aluminium	Steel						Aluminium	Steel
32	10	45	45	22	9	10	13	12	10	32,5	45	5,5	6,6	50	150
40	12	52	55	25	9	10	16	15	12	38	52	5,5	6,6	75	235
50	12	65	65	27	11	10	16	17	12	46,5	60	6,5	9	125	340
63	16	75	75	32	11	12	21	20	16	56,5	70	6,5	9	190	550

Overall dimensions and technical information are provided solely for informative purposes and may be modified without notice

Rear clevis (MP2)

Similar to type 08 but includes a hinge pin. This type of mounting allows anchorage of the cylinder either parallel or right angle to plane; the cylinder rod can oscillate and selfalign as necessary when under load. Made of die-cast aluminium or steel (see ordering code) and painted black.

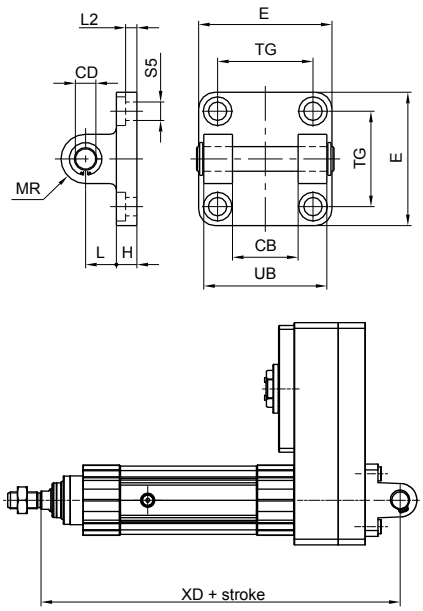

Ordering code :

Aluminium	**1380.Ø.09F**
Steel	**1320.Ø.20F**

Size	CB (H 14)	CD	E		H		L		MR	TG	UB (h14)	XD	L2 (±0,5)	S5	Weight (g)	
			Aluminium	Steel	Aluminium	Steel	Aluminium	Steel							Aluminium	Steel
32	26	10	45	45	9	10	13	12	10	32,5	45	228.7	5,5	6,6	80	180
40	28	12	52	55	9	10	16	15	12	38	52	257.7	5,5	6,6	130	290
50	32	12	65	65	11	10	16	17	12	46,5	60	306.2	6,5	9	185	400
63	40	16	75	75	11	12	21	20	16	56,5	70	325	6,5	9	310	670

Rear male clevis (MP4)

Similar to 09 and 20F clevis except for the connection, which is male rather than female.
Used to mount the cylinder either parallel or at a right angle to the plane; the cylinder rod can oscillate and self-align as necessary when under load. Made of die-cast aluminium or steel (see ordering code) and painted black.

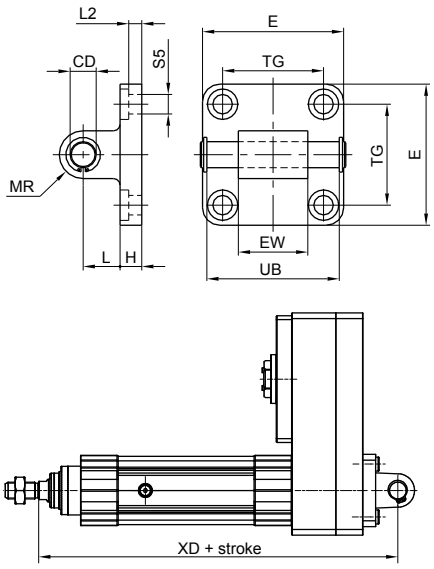

Ordering code :

Aluminium	**1380.Ø.09/1F**
Steel	**1320.Ø.21F**

Size	CD	E		EW	H		L		MR	TG	UB ($^{-0,5}_{-0}$)	XD	L2 (±0.5)	S5	Weight (g)	
		Aluminium	Steel		Aluminium	Steel	Aluminium	Steel							Aluminium	Steel
32	10	45	45	26 ($^{-0,2}_{-0,6}$)	9	10	13	12	10	32,5	46	228.7	5,5	6,6	90	210
40	12	52	55	28 ($^{-0,2}_{-0,6}$)	9	10	16	15	12	38	53	257.7	5,5	6,6	130	330
50	12	65	65	32 ($^{-0,2}_{-0,6}$)	11	10	16	17	12	46,5	61	306.2	6,5	9	190	430
63	16	75	75	40 ($^{-0,2}_{-0,6}$)	11	12	21	20	16	56,5	71	325	6,5	9	340	810

ELECTRIC ACTUATION

Simple rear trunnion with support brackets (not specified by ISO-VDMA standards)

Used to mount cylinders parallel to the plane to which the counter clevis is attached.
Allows self-alignment of the cylinder rod under load with an oscillation up to 90 degrees from the mounting plane.

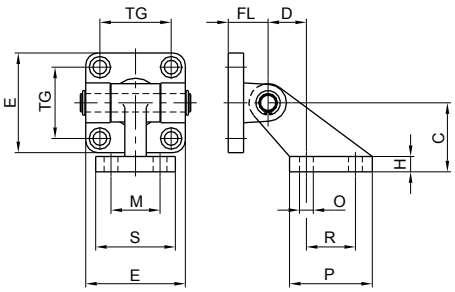

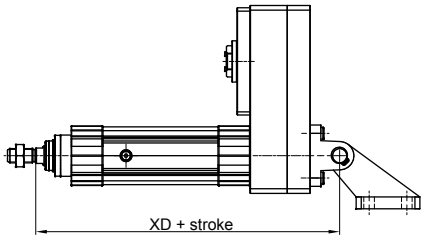

Ordering code: 1380.Ø.11F

Aluminium

Counter clevis can be ordered separately with code **1320.Ø.11/1F**

Size	C (±0,2)	D (±0.5)	E	H	FL	M (JS 14)	TG	O (H 13)	P	R (JS 14)	S	XD	Weight (g)
32	32	18	45	8	22	25	32,5	7	37	20	41	228.7	130
40	45	25	52	10	25	32	38	9	54	32	52	257.7	260
50	45	25	65	10	27	32	46,5	9	54	32	52	306.2	330
63	63	32	75	12	32	40	56,5	11	75	50	63	325	600

Square angle trunnion

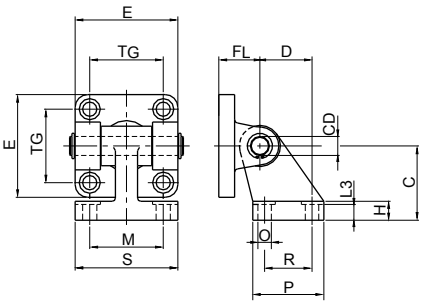

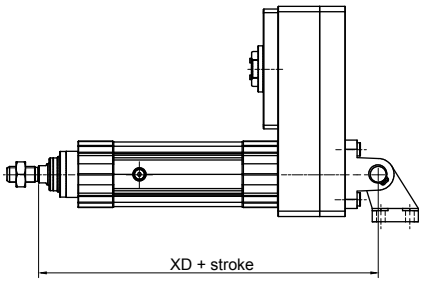

Ordering code:

Aluminium	**1380.Ø.35F**

Counter clevis can be ordered separately with code **1320.Ø.11/2F**

Steel	**1320.Ø.23F**

Counter clevis can be ordered separately with code **1320.Ø.24F**

Size	E		TG	FL	D (JS14)	CD	C (JS15)	H		L3		R (JS14)	P	O (H13)	S	M (JS14)	XD	Weight (g)	
	Aluminium	Steel						Aluminium	Steel	Aluminium	Steel							Aluminium	Steel
32	45	45	32,5	22	21	10	32	8	8	6,4	6,5	18	31	6,6	51	38	228.7	120	340
40	52	55	38	25	24	12	36	10	10	8,4	8,5	22	35	6,6	54	41	257.7	180	500
50	65	65	46,5	27	33	12	45	12	12	10,4	10,5	30	45	9	65	50	306.2	225	640
63	75	75	56,5	32	37	16	50	14	12	12,4	10,5	35	50	9	67	52	325	435	1250

Overall dimensions and technical information are provided solely for informative purposes and may be modified without notice

Standard trunnion (not specified by ISO-VDMA standards)

Mounting consists of clevis 09 and counter clevis. Used to mount cylinders at a right angle to the plane to which the counter clevis is attached. Allows self-alignment of the cylinder rod under load with an oscillation of ± 60 degrees.

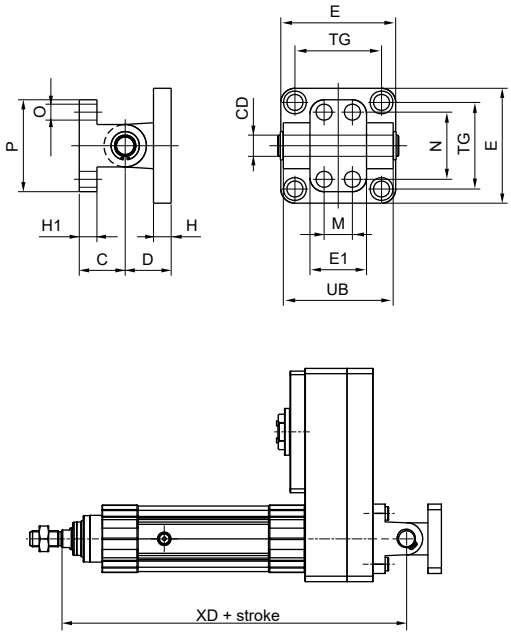

Ordering code: 1380.Ø.10F

Aluminium

Size	CB (±0,2)	CD	D	E	E1	H	H1	M (±0,2)	N (±0,2)	O	P	TG	UB	XD	Weight (g)
32	18	10	22	45	25	10	8	-	28	7	40	32.5	45	228.7	110
40	26	12	25	52	32	10	10	16	38	9	52	38	52	257.7	190
50	26	12	27	65	32	12	10	16	38	9	52	46.5	60	306.2	240
63	34	16	32	75	46	12	12	25	54	11	75	56.5	70	325	490

Rear narrow clevis

Utilised with clevis 15F or 25F allows the cylinder to oscillate in all directions. Made of die-cast aluminium or steel (see ordering code) and painted black.

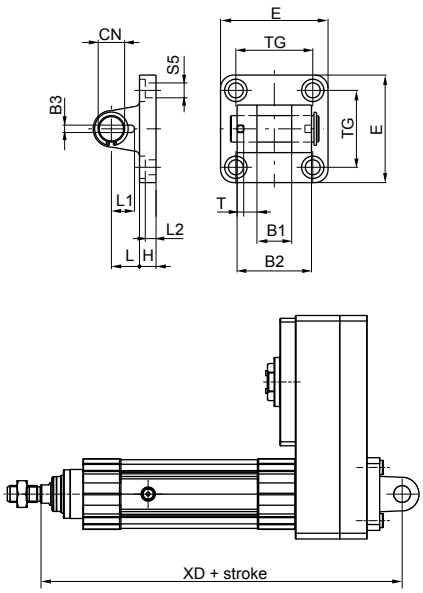

Ordering code:

Aluminium	**1380.Ø.30F**
Steel	**1320.Ø.29F**

Size	B1 (H 14)	B2 (d 12)	B3 ($^{0}_{-0,2}$)	CN	E		H		L		L1	L2 (±0,5)	S5	T	TG	XD	Weight (g)	
					Aluminium	Steel	Aluminium	Steel	Aluminium	Steel							Aluminium	Steel
32	14	34	3.3	10	45	45	9	10	13	12	11.5	5,5	6,6	3	32.5	228.7	70	160
40	16	40	4.3	12	52	55	9	10	16	15	12	5,5	6,6	4	38	257.7	115	270
50	21	45	4.3	16	65	65	11	10	16	17	14	6,5	9	4	46.5	306.2	200	370
63	21	51	4.3	16	75	75	11	12	21	20	14	6,5	9	4	56.5	325	290	670

Rear male clevis (with jointed head according to DIN 648K standard)

Utilised with clevis 30F or 29F allows the cylinder to oscillate in all directions. Made of die-cast aluminium or steel (see ordering code) and painted black.

Ordering code:

Aluminium	**1380.Ø.15F**
Steel	**1320.Ø.25F**

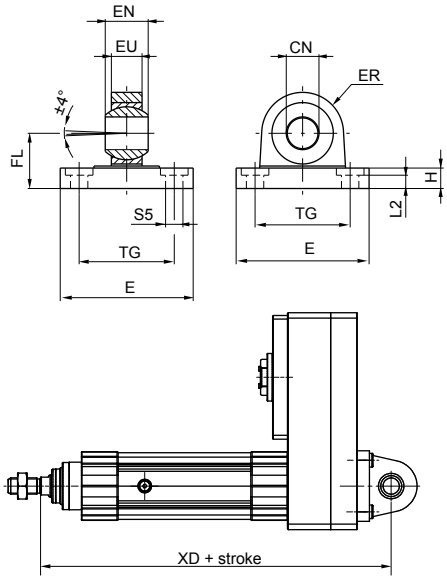

Size	CN (H 7)	E		EN (-0.1)	ER		EU	FL (JS 15)	H		L2 (±0.5)	S5	TG	XD	Weight (g)	
		Aluminium	Steel		Aluminium	Steel			Aluminium	Steel					Aluminium	Steel
32	10	45	45	14	16	15	10.5	22	9	10	5,5	6.6	32,5	228.7	60	210
40	12	52	55	16	19	18	12	25	9	10	5,5	6.6	38	257.7	100	310
50	16	65	65	21	21	20	15	27	11	10	6,5	9	46,5	306.2	180	400
63	16	75	75	21	24	23	15	32	11	12	6,5	9	56,5	325	245	710

Complete standard trunnion (with joined head according to DIN 648K standards)

Ordering code:

Aluminium	**1380.Ø.36F**

Counter clevis can be ordered separately with code **1380.Ø.15F**

Steel	**1320.Ø.26F**

Counter clevis can be ordered separately with code **1320.Ø.25F**

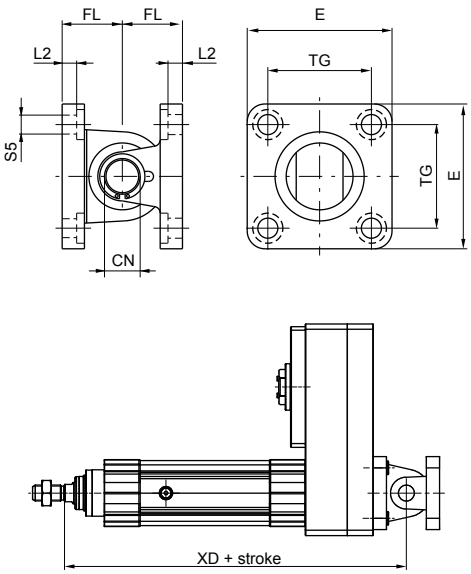

Size	CN	E		FL (JS 15)	L2 (±0.5)	S5	TG	XD	Weight (g)	
		Aluminium	Steel						Aluminium	Steel
32	10	45	45	22	5,5	6.6	32,5	228.7	130	380
40	12	52	55	25	5,5	6.6	38	257.7	215	580
50	16	65	65	27	6,5	9	46,5	306.2	380	770
63	16	75	75	32	6,5	9	56,5	325	535	1380

Overall dimensions and technical information are provided solely for informative purposes and may be modified without notice

Standard complete trunnion

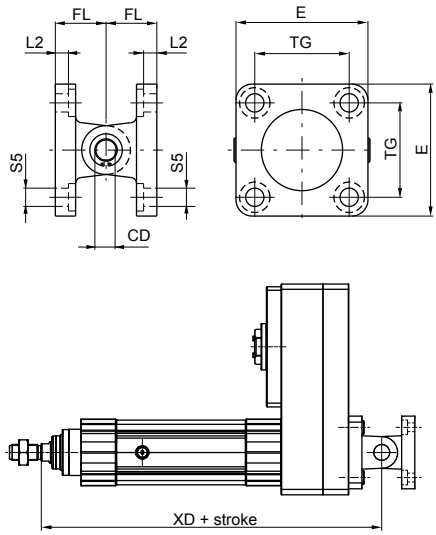

Ordering code:

Aluminium	**1380.Ø.22F**

Mounting consists of rear clevis code **1380.Ø.09F** + rear male clevis code **1380.Ø.09/1F** (ordering separately)

Steel	**1320.Ø.22F**

Mounting consists of rear clevis code **1320.Ø.20F** + rear male clevis code **1320.Ø.21F** (ordering separately)

Size	CD	E	FL	L2 (±0.5)	S5	TG	XD	Weight (g)
32	10	45	22	5,5	6.6	32.5	228.7	360
40	12	55	25	5,5	6.6	38	257.7	580
50	12	65	27	6,5	9	46.5	306.2	780
63	16	75	32	6,5	9	56.5	325	1370

Complete square angle trunnion (with joined head according to DIN 648K standards)

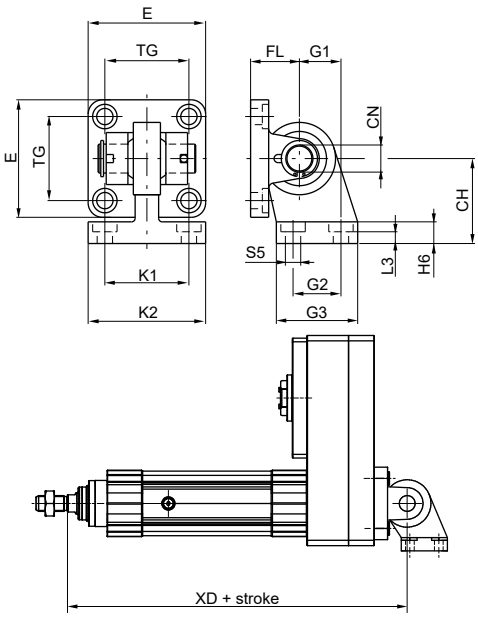

Ordering code: 1320.Ø.27F

Steel

Mounting consists of rear clevis narrow code **1320.Ø.29F** + simple counter clevis code **1320.Ø.28F** (ordering separately)

Size	CH (JS 15)	CN	E	FL (JS 15)	G1 (JS 15)	G2 (JS 14)	G3	H6	K1 (JS 14)	K2	L3 ( )	S5	TG	XD	Weight (g)
32	32	10	45	22	21	18	31	10	38	51	8.5	6.6	32.5	228.7	330
40	36	12	55	25	24	22	35	10	41	54	8.5	6.6	38	257.7	480
50	45	16	65	27	33	30	45	12	50	65	10.5	9	46.5	306.2	830
63	50	16	75	32	37	35	50	12	52	67	10.5	9	56.5	325	1220

ELECTRIC ACTUATION

Intermediate trunnion

Clevis to be mounted on the barrel to have the centre of rotation of the hinge pin at a point between the end plates of the cylinder. It is attached to the barrel by means of eight pointed grains that block in the "V" groove of the four protruding shapes. In the case of anchorage subject to heavy use, it is recommended to connect the clevis once the right position has been found.

Attention: mounting of the clevis with contact to the end plates does not allow the use of the magnetic sensors as the switch limits.

Ordering code: 1320.Ø.12F

Steel

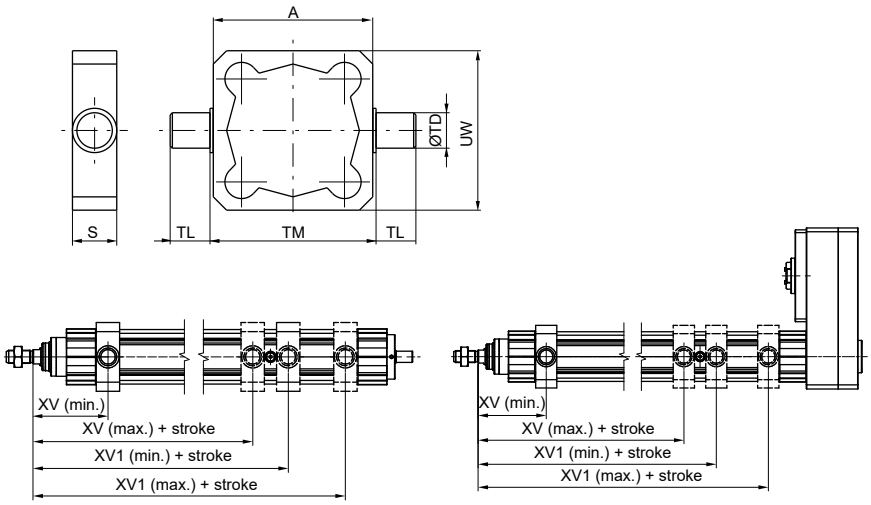

Size	A	S	TD (e9)	TL (h14)	TM (h14)	UW	Weight (g)	Maximum axial thrust (N)
32	49	18	Ø12	12	50	59	180	790
40	62	21	Ø16	16	63	62	270	1200
50	73	21	Ø16	16	75	73	330	1900
63	87	27	Ø20	20	90	87	650	3100

Size	XV		XV1	
	min.	max. + stroke	min. + stroke	max. + stroke
32	62	51,75	87,75	120,5
40	67,5	57	96	144
50	80,5	73,75	112,75	168,5
63	83,5	76,75	121,75	179,5

Minimum cylinder stroke: 30mm (In addition to stroke required)

Intermediate trunnion

Anodized aluminium intermediate trunnion with steel bushes to be mounted on the barrel.
This solution allows the cylinder to rotate around the hinge which can be mounted in any position between the end caps. It is attached to the barrel by means of 8 grub screws which secure the trunnion to the extruded barrel. In the case of heavy duty applications it is recommended that the trunnion is secured using expansion pins.
In case off applications with high speed, high load and high pressure please contact our technical office.

Please note: If the trunnion is mounted in direct contact with the cylinder end cap, it will not be possible to fit magnetic sensors at the end of stroke.

Ordering code: 1320.Ø.12BF

Aluminium with steel bushes

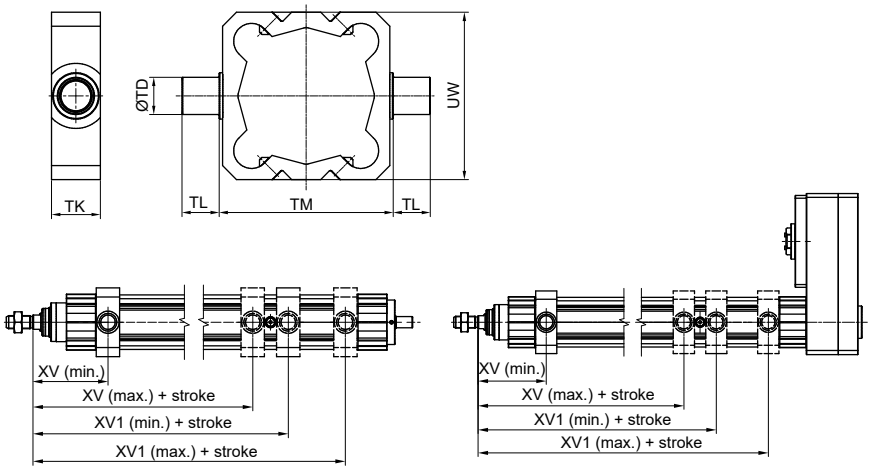

Size	TD	TL	TM	TK	UW	Weight (g)
32	Ø12	12	50	18	54	70
40	Ø16	16	63	21	60	110
50	Ø16	16	75	21	72	140
63	Ø20	20	90	27	87	280

Size	XV		XV1	
	min.	max. + stroke	min. + stroke	max. + stroke
32	62	51,75	87,75	120,5
40	67,5	57	96	144
50	80,5	73,75	112,75	168,5
63	83,5	76,75	121,75	179,5

Minimum cylinder stroke: 30mm (In addition to stroke required)

Overall dimensions and technical information are provided solely for informative purposes and may be modified without notice

Support for intermediate trunnion

Combining two supports to the intermediate trunnion it is possible to fix the cylinder on plane surface.

Ordering code: 1320.Ø.12/1F

1 piece

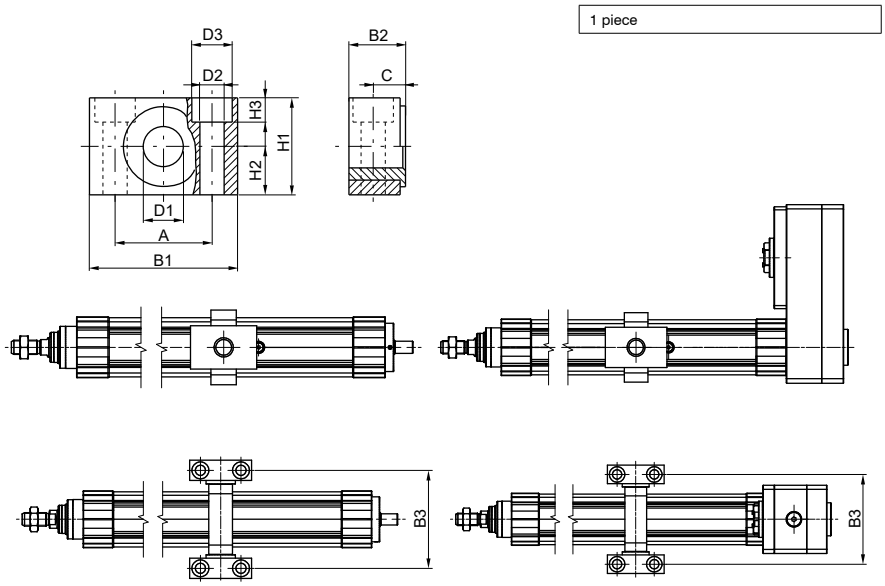

Size	A (±0.2)	B1	B2	B3	C	D1 (F7)	D2	D3	H1	H2 (±0.1)	H3	Weight (g) 1 piece
32	32	46	18	71	10.5	12	6.6	11	30	15	7	100
40	36	55	21	87	12	16	9	15	36	18	9	150
50	36	55	21	99	12	16	9	15	36	18	9	150
63	42	65	23	116	13	20	11	18	40	20	11	235

Intermediate support

Ordering code: 1800.Ø.02F

2 pieces

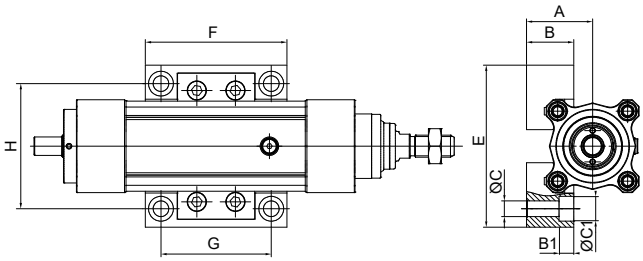

Attention: fixing not available on the following cylinders:
Size 40, with motor Part No. 1800B0801900 on-line
Size 50, with motor Part No. 1800B1001900 on-line
Maximum axial thrust per single support (with screws tightened to 20Nm):
Ø32 = 1950N - Ø40 = 6550N - Ø50 = 7400N - Ø63 = 7400N

Size	A	B	B1	C	ØC1	E	F	G	H	Weight (g)
32	32	25	8	8.5	13.5	82.5	77	60	60	313
40	36	26	8	8.5	13.5	88	77	60	68	331
50	45	31.5	8	9	14	102	77	60	81.5	391
63	50	31.5	8	9	14	111.5	77	60	91.5	391

Number of supports for applications

Size	Stroke	
32	≤100	>100
40	≤80	>80
50	≤70	>70
63	≤55	>55
N° supports	1	2

ELECTRIC ACTUATION

Fork

Element that when screwed to the rod consents a regular functioning even when there are significant lateral forces as the connection point. Made of zinc-plated steel.

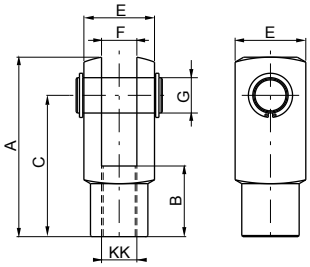

Ordering code: 1320.Ø.13F

Steel

Fork with clips

Element that when screwed to the rod consents a regular functioning even when there are significant lateral forces as the connection point. Made of zinc-plated steel.

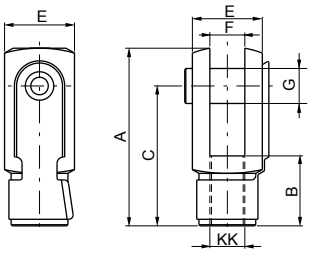

Ordering code: 1320.Ø.13/1F

Steel

Nut

Used to block the position of the fork.

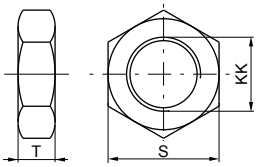

Ordering code: 1320.Ø.18F

Steel

Size	A	B	C	E	F (B12)	G	S	T	KK	Weight (g)	
										Fork	Nut
32	52	20	40	20	10	10	17	6	M10x1.25	100	15
40	62	24	48	24	12	12	19	7	M12x1.25	140	20
50	83	32	64	32	16	16	24	8	M16x1.5	340	20
63	83	32	64	32	16	16	24	8	M16x1.5	340	20

Lubrication filling syringe

Syringe complete with nozzle (M5)

For the amount of lubricant and re-fill interval, please refer to the assembly instructions.

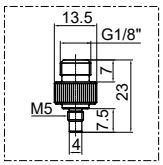

Ordering code: 1800.99.03

Weight 420 g

Nozzle (M5) can be ordered separately with code **1800.UM5**

**ATTENTION: the syringe is supplied empty

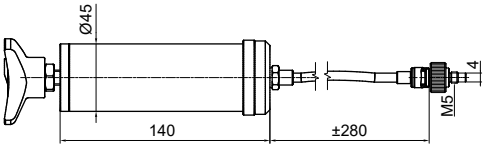

Lubrication (Grease)

For the ball screws, please use the lubricant (grease) specified.

Ordering code: RS/GRAS19

Weight 1.000 g

Overall dimensions and technical information are provided solely for informative purposes and may be modified without notice

Ball joint

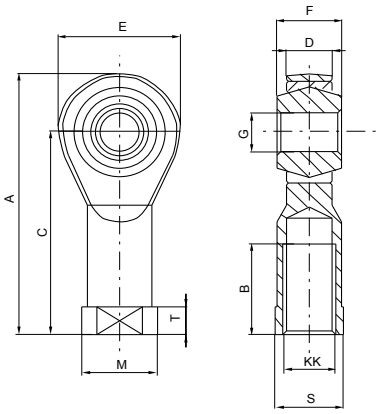

Ordering code: 1320.Ø.32F

Steel

Size	A	B	C	D (-0.1)	E	F	G (H7)	KK	M	S	T	Weight (g)
32	57	20	43	10.5	28	14	10	M10x1.25	19	17	6.5	76
40	66	22	50	12	32	16	12	M12x1.25	22	19	6.5	110
50	85	28	64	15	42	21	16	M16x1.5	27	22	8	220
63	85	28	64	15	42	21	16	M16x1.5	27	22	8	220

Self-aligning joint

Ordering code: 1320.Ø.33F

Steel

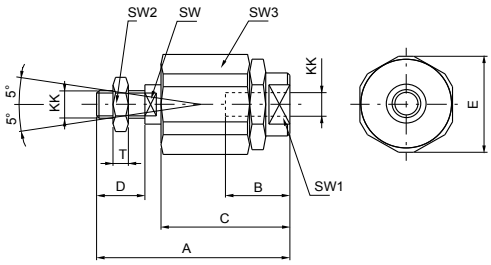

Size	A	B	C	D	E	KK	SW	SW1	SW2	SW3	T	Weight (g)
32	71	20	46	20	32	M10x1.25	12	19	17	30	6	220
40	75	20	46	24	32	M12x1.25	12	19	19	30	7	230
50	103	32	63	32	45	M16x1.5	20	27	24	41	8	660
63	103	32	63	32	45	M16x1.5	20	27	24	41	8	660

Magnetic Sensors (Limit switches)

Accidental collision of a mechanical limit switch can cause damage the electric cylinder. Therefore it is advisable to use magnetic sensor limit switches.
(Important: avoid external magnetic interference near the sensors.

You can use REED or HALL effect sensors. For the types available, see following pages.
The limit switches must be fixed to the cylinder barrel profile using the appropriate aluminum mounting brackets indicated below.

Sensor brackets 1580._, MRS._, MHS._		
Code	**Size**	**L1**
1320.AS	32	48
	40	54
1320.BS	50	66
	63	76

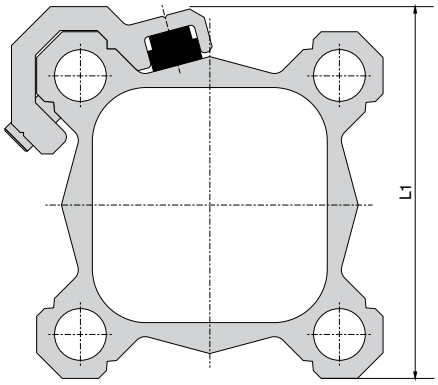

Assembly

Remove the screw as shown on **pos.1** and attached to the bracket as shown in **pos.2.**
attach the switch/bracket on to the barrel in the required position and fix with the screw a shown on **pos.3.**

There after, check that the function of the switch is correct and is in the correct position byoperating the actuator slowly.
This will help avoid damage to the cylinder because of incorrect switch position.
The Homing search phase must be performed at low speed(close to 10mm/sec) to avoid harmful impacts to the device.

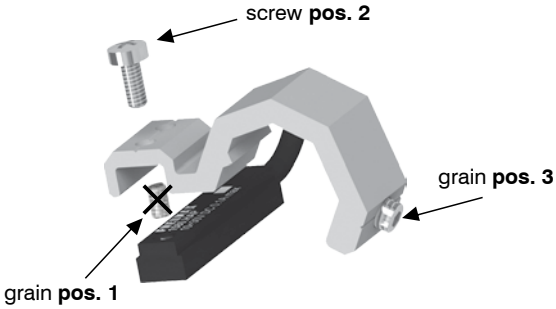

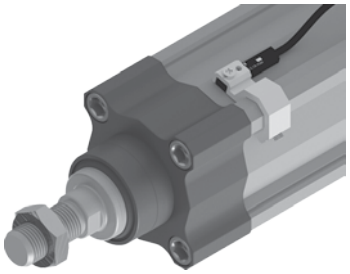

Overall dimensions and technical information are provided solely for informative purposes and may be modified without notice

Sensor with 2,5 m. cable

Weight 27 g

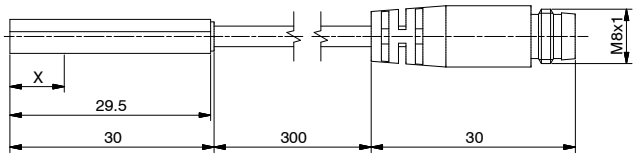

Slot detail type "B"

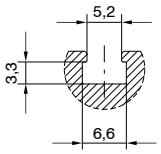

Sensor with cable and M8 connector

Weight 15 g

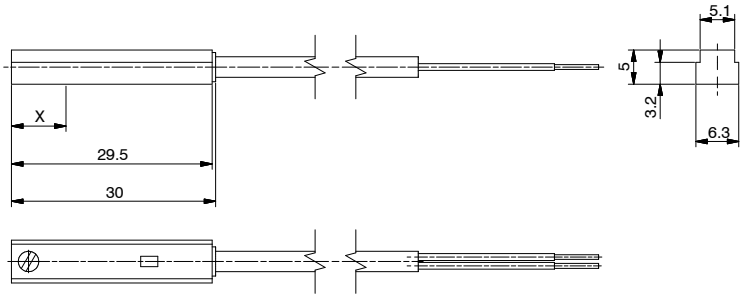

Sensor ordering codes

Ampulla Reed sensors, with led, Universal, N.O. (Normally open)		X=point of communtation
1580.U	(2 wires) cable 2.5 mt.	15 mm
MRS.U	(2 wires) cable 300 mm, M8 connector (use MC1 or MC2 connectors)	15 mm
1580.UAP	PNP (3 wires) cable 2.5 mt.	15 mm
MRS.UAP	PNP (3 wires) cable 300 mm, M8 connector (use MCH1 or MCH2 connectors)	15 mm

Hall effect sensors, with led, DC, N.O. (Normally open)		X=point of communtation
1580.HAP	PNP (3 wires) cable 2.5 mt.	8 mm
1580.HAN	NPN (3 wires) cable 2.5 mt.	8 mm
MHS.P	PNP (3 wires) cable 300 mm, M8 connector (use MCH1 or MCH2 connectors)	8 mm

Diagrams and connections

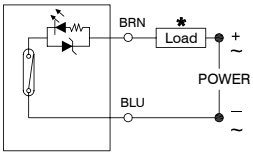

with Reed bulb (2 wires)

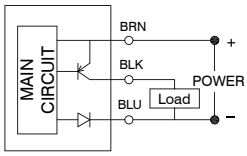

Hall-PNP effect (3 wires)

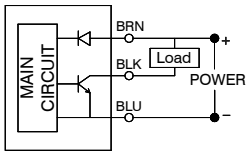

Hall-NPN effect (3 wires)

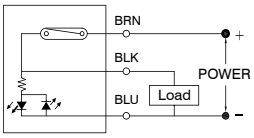

with Reed bulb (3 wires)

*** The load (LOAD) can be connected either to negative or positive pole**

TECHNICAL CHARACTERISTICS	1580.U	MRS.U	1580.UAP	MRS.UAP	1580.HAP	1580.HAN	MHS.P
Type of contact	N.O.						
Output type	/		PNP			NPN	PNP
Maximum permanent current	100mA						
Maximum permanent power	14 VA - 10 W		4 VA - 3 W		3 W		
Voltage range	5 ... 230V DC/AC	5 ... 30V DC/AC	10 ... 30 V DC/AC		10 ... 30 V DC		
Working temperature	-10°C ... +70°C						
Maximum voltage drop	3,5 V		0V **		2 V		
Cable section (mm²)	2 x 0,14 Ø3,3 mm PUR	2 x 0,14 Ø3,3 mm PUR	3 x 0,14 Ø3,3 mm PUR		3 x 0,14 Ø3,3 mm PUR		
Degree of protection	IP 67						

****Even if one sensor generates a voltage drop very close to 0 volts, we suggest to connect no more than 30 sensors in series.**

Cable ordering code

Connection 2 wires	
MC1	cable 2 wires l=2.5m with M8 connector
MC2	cable 2 wires l=5m with M8 connector
MC3	cable 2 wires l=10m with M8 connector

Connection 3 wires	
MCH1	cable 3 wires l=2.5m with M8 connector
MCH2	cable 3 wires l=5m with M8 connector
MCH3	cable 3 wires l=10m with M8 connector

Connector

Sensor

Connection 2 wires

1 Brown (+)
4 Blue (-)
3 Not use

Connector

Sensor

Connection 3 wires

1 Brown (+)
4 Black (signal)
3 Blue (-)

HEADQUARTERS

PNEUMAX

PNEUMAX S.P.A.

Via Cascina Barbellina, 10
24050 Lurano (BG) - Italia
Tel. 035/4192777
Fax 035/4192740 - 035/4192741
info@pneumaxspa.com
www.pneumaxspa.com

WORLDWIDE NETWORK

EUROPE

ALBANIA
Industrial Air Solution shpk
Rruga industriale Tirane Vore, km 11,
1032 Vore Tirane
Tel. +355 69 40 80 349
info@iasolution.al
www.iasolution.al

AUSTRIA AND SWITZERLAND
Managed by Pneumax GmbH (Germany)

BELGIUM
Pneuvano BV
Koralenhoeve 4
2160, Wommelgem
Tel. +32 3 355 32 20
info@pneuvano.com
www.pneuvano.com

BOSNIA AND HERZEGOVINA
TRI BEST d.o.o.
Industrijska zona Ramići b.b., 78000
Banja Luka, Bosnia and Herzegovina
Tel: +387 51 392 093
info@tribestbl.com
www.tribestbl.com

BULGARIA
Ulmer DM OOD
Adam Mizkevich Str. 4a, 1360, Sofia
Tel. +359 (2) 9259951
office@ulmer.bg
www.ulmer.bg

CYPRUS
G C V Spare Parts & Services Ltd
Industrial Area, Anatoniko 8086
P.O. Box 62731, Paphos
Tel. +357 26812444
gcv.cy@cytanet.com.cy
www.gcv-parts.com

CROATIA
ProElektronika d.o.o. - Zagabria
Stefanovecka 10, 10040, Zagabria
Tel. +385 (0)1 5588 988
info@proelektronika.hr
www.proelektronika.hr

ESTONIA
Alas-Kuul AS
Loomäe tee 1, Lehmja küla
75306, Rae vald Harjumaa
Tel. +372 6593 218
info@alas-kuul.ee
www.alas-kuul.ee

FRANCE
Pneumax France SAS
Z.I. NORD PARADIES 7
Rue de Waldkirch - BP 42
67601, Selestat CEDEX
Tel. +33 (3) 88580450
commercial@pneumax-france.fr
www.pneumax-france.fr

GERMANY
Pneumax GmbH
Tantalstraße 4
63571, Gelnhausen
Tel. +49 (0) 6051 9777 0
info@pneumax-gmbh.de
www.pneumax.de

GREECE
Hydropneumatic Hellas S.A.
69, Spirou Patsi Str. T.K., 118 55, Atene
Tel. +30 (210) 3474181-2-3
info@mitsis.com.gr
www.mitsis.com.gr

UNITED KINGDOM
Pneumax UK Ltd.
110 Vista Park,
Mauretania Road
SO16 0YS, Nursling
Tel. +44 2380 740412
sales@pneumax.co.uk
www.pneumax.co.uk

ICELAND
Barki E.H.F. Ltd
Nybylavegi 22, 200, Kópavogur
Tel. +354 554 6499
barkiea@islandia.is

LITHUANIA
UAB "Domingos prekyba"
Savanoriu PR 187-4 Korp, 2053, Vilnius
Tel. +370 5 2322231
info@dominga.lt
www.dominga.lt

NORTHERN MACEDONIA
DIL KOM DOOEL
St. Joska Jordanoski No 657500, Prilep
Tel. +389 78244177
export.dilkom@gmail.com
www.dilkom.mk

MALTA
iAutomate Limited
San Bernard, Marsa MRS 1332, Malta
Tel. +356 2786 3996
matthew@iautomate.mt
www.iautomate.mt

NETHERLANDS
Pneu/Tec B.V.
Dirk Storklaan 75, 2132 PX, Hoofddorp
Tel. +31 (0) 235699090
sales@pneutec.nl
www.pneutec.nl

POLAND
Rectus Polska SP. Z.O.O.
Gumna 96, 43-426, Debowiec
Tel. +48 (33) 857 98 00
pneumax@pneumax.pl
www.pneumax.pl

PORTUGAL
Portugal Pneumax Lda
Complexo Industrial da
Granja Fracção H-Casarias
2625-607, Vialonga
Tel. +351 (219) 737390
geral@pneumax.pt
www.pneumax.pt

CZECH REPUBLIC
Pneumax Automation s.r.o.
U Panského mlýna 240/9,
747 06, Opava
Tel. +420 553 760 953
pneumax@pneumaxsro.cz
www.pneumaxsro.cz

ROMANIA
Gica Import Export
Zona Industriala de Vest str. II nr. 5,
310491, Arad
Tel. +40 257 259816
comercial@gica.ro
www.gica.ro
DENMARK - FINLAND

Overall dimensions and technical information are provided solely for informative purposes and may be modified without notice

NORWAY - SWEDEN (SCANDINAVIA)
Pneumax Scandinavia AB
Strandvägen 101, SE-234 31, Lomma
Tel. +46 (40) 617 40 40
info@pneumax.se
www.pneumax.se

SERBIA
Hidraulika DOO
Cirila i Metodija 15, 15000, Šabac
Tel. +381 15 360 090
info@hidraulika.rs
www.hidraulika.rs

SLOVENIA
Hidravlika d.o.o.
Medlog, 16, 3000, Celje
Tel. +386 (3) 5453610
info@hidravlika.si
www.hidravlika.si

TRG d.o.o.
Celovška cesta 150, 1000, Ljubljana
+386 1 500 14 51
info@podjetje-trg.si
www.podjetje-trg.si

SPAIN
Pneumax S.A.
Pol. Ind. Olaso Edif. 15 – Pab. 52-53-54
20870 Elgoibar, Guipúzcoa
Tel. +34 943 744144
pneumax@pneumax.es
www.pneumax.es

Pneumax Catalunya S.A.
C/Riera de Vallvidrera,
Parc. 2N. 1 P.I. Riera del Molì
8750, Molins de Rei
Tel. +34 (93) 680 25 30
pneumax@pneumaxcat.com
www.pneumax.es

TURKEY
Eteknik Otomasyon Tic. Ltd. Sti
Perpa Ticaret Merkezi B Blok Kat:11 No:1636 Ok-meydanı Sisli (Istanbul)
Tel. +90 212 320 81 10
recepcakar@eteknik.com
www.eteknik.com

UKRAINE
UKRTECHTRONIC LLC.
st. Nyzhnoyurkivska, 9, 04080, Kiev
Tel. +38 044 500 98 48
sales@techtronic.com.ua
www.techtronic.com.ua

HUNGARY
Szele-Tech Bt.
Jr. Dinamarca 1427,
Neumann János u. 1.
2142 Nagytarcsa
Tel. +36 1 401 0023
info@szele-tech.hu
www.szele-tech.hu

NORTH AMERICA

CANADA
Manufacture Scorpion Inc.
561, rue Edouard, J2G 3Z5, Granby
Tel. +1 (450) 378-3595
contact@mscorpion.com
www.manufacturescorpion.com

USA
Pneumax Automation LLC
5005 Apple Creek Parkway (PO Box 495)
Dallas NC, 28034 - USA
Tel.: +1 704 215 6991
Fax: +1 888 613 6529
info@pneumax.us
www.pneumax.us

MEXICO
Pneumatecnia S.A. DE C.V. - Zapopan
Calle Volcán Popocatépetl 1844, Colli Urbano
45070, Zapopan, Jalisco
Tel. +52 33 31255978
pneumatecnia@yahoo.com.mx
www.pneumatecnia.com.mx

CENTRAL AMERICA

COSTA RICA
PYASA Proyectos y Automatizacion S.A.
Oficentro Santa María Oficina 1A,
50 metros Norte
Del Hampton Inn & Suites, Alajuela
Tel. +506 2441-5129 / 2441-5130
info@pyasa.net
https://pyasa.net

EL SALVADOR
Tecni Equipos S.A. de C.V.
Av. Sierra Nevada, 704 Edificio CC, 2
Colonia Miramonte, San Salvador
Tel. (503) 2260-8293
Tel. (503) 2261-1497
tecniequipos.com.sv

GUATEMALA
PYASA Proyectos y Automatización S.A.
Avenida 3era 13-30 El Rosario Ofibodegas
San Javier zona 3 de Mixco bodega 7
Città del Guatemala
Tel. +502 24911414
info@pyasa.net
https://pyasa.net

NICARAGUA
PYASA Proyectos y Automatización S.A.
Plaza Maranhao, local 7, Reparto Los Robles, o bien, del Hotel Seminole 100 m sur,
1/2 m al oeste
Managua
Tel. +505-2255-6840
info@pyasa.net
https://pyasa.net

SOUTH AMERICA

ARGENTINA
Figli Daniele S.r.l.
PTE PERON 3234
San Justo - Pcia De Bs As.
Tel. +54 11 4484-2074
Fax +54 11 4651-6721
bruno@dinautomacion.com.ar
www.dinautomacion.com.ar

BRAZIL
Pneumax Brasil
Rua Apucarana 211
8301050, São José dos Pinhais
Tel. +55 41 33987262
diretoria@pneumaxbr.com.br
www.pneumaxbr.com.br

CHILE
Schultz Automatizacion e Ingenieria Ltda
El Retiro 1247 - Enea - Pudahuel, Santiago
Tel. +56 (2) 4951400
jschultz@schultzautomatizacion.cl
www.schultzsa.cl

COLOMBIA
Soluciones Neumaticas S.A.S.
Calle. 21 #1-21, Barrio San Nicolas, Cali
Tel. +57 (2) 4897647
ingenieria@solucionesneumaticas.com
www.solucionesneumaticas.com

ECUADOR
Equipos para automatización
Industrial Equipautind S.A.
Km 12,5 de la vía a Daule s/n entre
La Ciudadela el caracol y el motel las Palmas
090706, Guayaquil
Tel. +593-42017785 / 2017914
info@equipautind.com.ec
www.equipautind.com.ec

AINSA S.A.
Av. Juan Tanca Marengo
Km 2,5 y Agustín Freire
EC090509, Guayaquil
Tel. +593-4 3712670
info@ainsa.com.ec
www.ainsa.com.ec

PERU
Neumatec Perù S.A.C.
Jr. Mantaro 184 Urb. Chacra Colorada
Breña, Lima, Peru
Tel. +51 (1) 393 97 39
Tel. +51 (1) 946 46 73 94
ventas@neumatecperu.com
www.neumatecperu.com

GRUPO 2B PERU
Av. Naciones Unidas 1578 Piso 7 Urb.
Chacra Rios Norte, Cercado de Lima, Perù
Tel. +51 997 508 676
administracion@grupo2bperu.com
www.grupo2bperu.com

GRUPO 2B IMPORT E.I.R.L.
Jr. Dinamarca 1427, Cercado de Lima, Peru
Tel. +51 425 5740
framirez@grupo2bperu.com

URUGUAY
Secoin S.A
General Aguilar 1270 bis,
Gral. Fausto Aguilar 1270,
11800 Departamento de Montevideo
Tel. +598 2209 3815
ventas@secoin.com.uy
www.secoin.com.uy

VENEZUELA
Sinteco Barquisimento
AV.Las Industrias Km2,
Edif. Centro de servicios
mercantiles local 2, Barquisimeto
Tel. +58 414 3500587
sintecobarqto@gmail.com

WORLDWIDE NETWORK

AFRICA

ALGERIA
C.M.P.R. Sarl
23 Rue Lalla Fatma N'Soumeur Hassen
Badi El-Harrach, Algeri
Tel. +213 21 82 70 69
tn.cmpr@yahoo.fr

EGYPT
MEGA PASCAL COMPANY
Shop 6 building no 1 Jordan co.
10th Of Ramadan City, Egypt
Tel. +20554368385
Fax: +20554368385
info@eefhydropneu.com
www.eefhydropneu.com

ALKHAMIS Hydraulic Company
A/6 Elfaroqia Buildings -Gesr
El Suis St., El Nozha Cairo
Tel. +20 2 26206391/3/2
Fax: +20 2 26206394
gkhamisimp@gmail.com
www.alkhamis-eg.com

GHANA
Cemix Limited
34 SPINTEX ROAD-ACCRA-GHANA-WEST
Tel. +233 0302 817030
sales@cemixghana.com
www.cemixghana.com

MOROCCO
R2i TFZ
Ilot 87, 1er étage, Bureau 20,
zone franche d'Exportation Tanger
Tel. +212 539 39 10 17
r2itfz@r2imaroc.ma
www.r2itfz.com

SOUTH AFRICA
Titan Pneumatics (Pty) Ltd
Unit D1, Palisades Business Park, 39 Kelly Road,
Jet Park, Boksburg Gauteng, South Africa, 1459
Tel: +27 11 568 2922 / 33
sales@titanpneumatics.co.za
www.titanpneumatics.co.za

TUNISIA
L'Equipement moderne
86, Av. de Carthage, 1000, Tunisi
Tel. +216 71 343844
equipement.moderne@planet.tn
www.equipementmoderne.com.tn

ASIA

SAUDI ARABIA
Arabian Universal Est. for Trading
7325 Ath Thuqfah – Al Faisaliyah
District - Jeddah
Tel. +966 122610299
info@aue-co.com
www.arabianuniversal.com

CHINA
Pneumax Pneumatic
Equipments Co., Ltd.
No. 76, Jinma Rd., Jiufu Economic
Development Zone, Jiuting Town
201615, PRC, Shanghai
Tel. +86 (21) 57763100
sales@pneumaxchina.com
www.pneumaxchina.com

UNITED ARAB EMIRATES
Fine Industrial & Agri ENG. Services
P. O. BOX 5763, Sharja UAE
Tel. +971 (6) 5335434
fineinds@emirates.net.ae

PHILIPPINES
Integrated Hydro-Pneumatic Systems, Inc.
N°4 St. Thomas Avenue,
Lopez Commercial Area
Sucat, Parañaque City
Tel. +632 02 820-0569
integhps@iconex.net

JORDAN
Al Sultan Company
P.O. Box 620996
11162, Amman
Tel: + 962 6 4753764
info@alsultanco.com
www.alsultanco.com

INDIA
Pneumax Pneumatic India Pvt. Ltd.
Plot No. 2, Sector 151
Noida-201310
Tel. +91 (120) 4352560 / 61 / 62
info@pneumax-india.com
www.pneumaxindia.com

INDONESIA
Managed by Pneumax Singapore Pte Ltd

PT. Mutiara Citramulia Teknindo
Ruko Karawaci Residence Blok A1,
No. 17 Jl. Raya
Legok. Bojong Nangka Kelapa Dua
Serpong-Tangerang 15810, Banten, 15810,
Giacarta
Tel. +62 21 29324792
pneumaxmct@cbn.net.id
www.pneumaxspa.com/en

IRAN
Ital Electro Pneumatic
NO. 204-2ND FLOOR-TAGHINIA
BLDG-SOUTH SA'ADI STREET
114715719, Teheran
Tel. +98 (21) 33919177
info@italpneum.com

ISRAEL
Ilan & Gavish
Yokneam Ilit 20692
POB 335, Soltam Site
Tel. +972 3 9221824
mail@ilan-gavish.com
www.ilan-gavish.co.il

LEBANON
Yammine Trading Company SARL
Boushrieh, Industrial City, P.O. Box 90 684
Jdeideh, El Metn 1202
2060, Beirut
Tel. +961 1 885520
info@yamminetrading.com
www.yamminetrading.com

MALAYSIA
Managed by Pneumax Singapore Pte Ltd
PSI Pneumatic Control Sdn Bhd
4M (1) Desa Universiti Commercial Complex,
Jalan Sungai Dua
11700, Penang
Tel. +60 4 6592627
sales-psi@airdynamics.com.sg

OMAN
Muscat Pneumatic System & Project LLC
Shop # 1484, Building # 1450B,
P.O. Box 105 PC: 120,
Muscat, Sultanate Of Oman
Tel. +968 93989398
sales@muscat-pneumatic.com

PAKISTAN
Fluid Tekhnik
Suite 101-104 Industrial Town Plaza, Opp. Sind
Madressah, Shahrah-e-Liaquat
74000, Karachi
Tel. +92 (21) 2410335
info@fluid-technik.com.pk
www.fluid-technik.com.pk

SINGAPORE
Pneumax Singapore Pte Ltd
51, Ubi Avenue 1/ 01-16,
Paya Ubi Industrial Park
408933, Singapore
Tel. +65 6392 0581
sales@pneumax.com.sg
www.pneumax.com.sg

SYRIA
Al Rowad Trading
P.O. BOX. 12806
Damasco
Tel: +963 944 228 955
alrowadtrading01@hotmail.com

THAILAND
Thai Agency Engineering Co. LTD
9 Soi Yasoop 2, 2nd-3rd Floor,Vorasin
building,Vipavadirangsit Road,Ladyao
10900, Chumphon
Tel: +66 (2) 6915900
taec@bkk.loxinfo.co.th
www.thai-a.com

OCEANIA

AUSTRALIA
Air Automation Group Pty Ltd
15 Broadhurst Rd,
Ingleburn NSW 2565
Tel. +61 02 9618 6777
sales@airautomation.com.au
www.airautomation.com.au

NEW ZEALAND
Treotham Automation Pty Ltd
Level 4, 21 Putney Way,
Manukau Auckland 2104
Tel. +64 9278 6577
Fax: +64 9278 6578
info@treotham.co.nz
www.treotham.co.nz

Overall dimensions and technical information are provided solely for informative purposes and may be modified without notice

PNEUMAX S.p.A.
Via Cascina Barbellina, 10
24050 Lurano (BG) - Italy
P. +39 035 41 92 777
electric@pneumaxspa.com

D.NW.93-EN-REV.E-10/2024