PNEUMAX

VALVES POPPET SYSTEM **SERIES PG**

HIGH FLOW RATES FOR COMPRESSED AIR AND VACUUM

Series PG - for compressed air and vacuum

The large flow valves and solenoid poppet valves for compressed air and vacuum.
Are manufactured for 3/2 and 2/2 versions only, either normally close and normally open.

Construction characteristics

	G 1/2" - 1/2" NPT	G 3/4" - 3/4" NPT	G 1" - 1" NPT	G 1 1/2" - 1 1/2" NPT
Body, operator and end cover	Aluminium			
Actuators rod	Steel			
Bottom plates	Aluminium			
Seals and poppets	NBR			
Springs	Stainless steel			
Pin guide	Stainless steel			
Pistons	Acetal resin			

Use and maintenance

These valves have a mean life of 10 to 15 million cycles under normal operating conditions.
Lubrication is not required for good operation but we recommend good filtration to avoid dirty deposit causing malfunction.
Please ensure that the valve is being used according with the manufacturers specification, such as air pressure and temperature.
The exhaust port of the distributor has to be protected in a dusty and dirty environment.
For these products, according to the construction technique and special application, is not required any maintenance with parts replacement.
When necessary it is sufficient to clean the internal parts.
When it is used the solenoid valves with internal pilot, either for air or vacuum, inlet flow rate must be equal or higher that the required consumption flow rate.
Otherwise is better choose the external pilot version.

Pneumatic - Spring

Coding: P❍2A❍11E❍00000

Operational characteristics	
Fluid	Filtered air. No lubrication needed, if applied it shall be continuous
Max. working pressure (bar)	10
Minimum pilot pressure (bar)	2,5
Temperature °C	-5 ... +70
Flow rate at 6 bar with Δp=1 (Nl/min)	4800
Orifice size (mm)	15
Working ports size	G1/2" - 1/2" NPT
Pilot ports size	G1/8" - 1/8" NPT

❍	CONNECTIONS
	G = Gas thread
	N = NPT thread
❍	WAYS NUMBER
	2 = 2 ways, 2 positions
	3 = 3 ways, 2 positions
❍	FUNCTION
	A = Normally Open (only for 3 ways)
	C = Normally Closed

AIR DISTRIBUTION

2/2

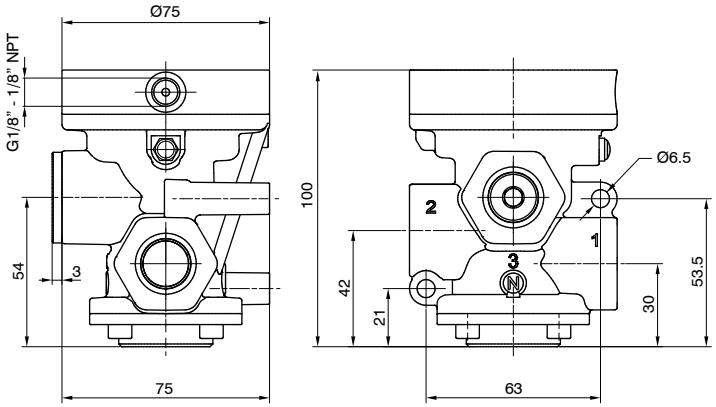

N.C.
Inlet port 1
Outlet port 2
Exhaust port 3 (closed)

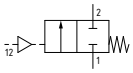

Weight 675 g

P❍2A211E❍00000

3/2

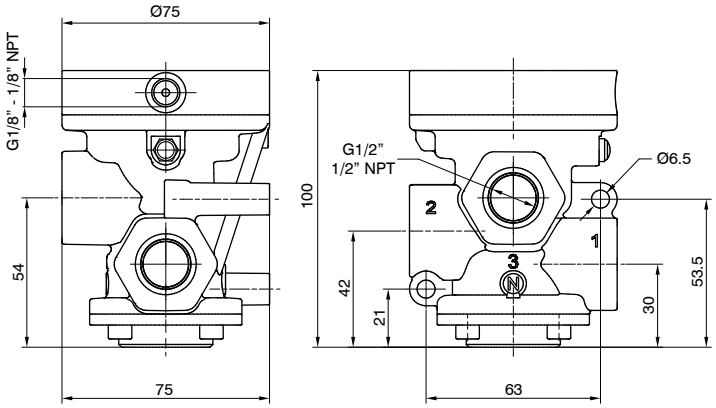

N.O.
Inlet port 3
Outlet port 2
Outlet port 1

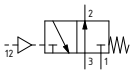

N.C.
Inlet port 1
Outlet port 2
Exhaust port 3

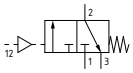

Weight 648,5 g

P❍2A311E❍00000

Overall dimensions and technical information are provided solely for informative purposes and may be modified without notice

Solenoid-Spring

Coding: P©2A(N)01(V)(F)(T)

Operational characteristics	
Fluid	Filtered air. No lubrication needed, if applied it shall be continuous
Max. working pressure (bar)	10
Minimum pilot pressure (bar)	2,5
Temperature °C	-5 ... +50
Flow rate at 6 bar with Δp=1 (Nl/min)	4800
Orifice size (mm)	15
Working ports size	G1/2" - 1/2" NPT
Pilot ports size	G1/8" - 1/8" NPT
Responce time according to ISO 12238, activation time (ms)	21 (self feeding version)
Responce time according to ISO 12238, deactivation time (ms)	83 (self feeding version)

©	CONNECTIONS
	G = Gas thread
	N = NPT thread
(N)	WAYS NUMBER
	2 = 2 ways, 2 positions
	3 = 3 ways, 2 positions
(V)	VERSION
	A = Self feeding
	E = External feeding
(F)	FUNCTION
	A = Normally Open (only for 3 ways)
	C = Normally Closed
(T)	VOLTAGE (22 MM SOLENOID COIL)
	S40B0 = 12 VDC
	S50B0 = 24 VDC
	S60B0 = 24 V 50/60 Hz
	S70B0 = 110 V 50/60 Hz
	S80B0 = 230 V 50/60 Hz
	10000 = Without solenoid coil
(T)	VOLTAGE (30 MM SOLENOID COIL)
	S40C0 = 12 VDC
	S50C0 = 24 VDC
	S60C0 = 24 V 50/60 Hz
	S70C0 = 110 V 50/60 Hz
	S80C0 = 230 V 50/60 Hz
	10000 = Without solenoid coil

2/2

30 mm SOLENOID COIL
Connection: DIN 43650 "A" SHAPE

22 mm SOLENOID COIL
Connection: DIN 43650 INDUSTRIAL "B" SHAPE

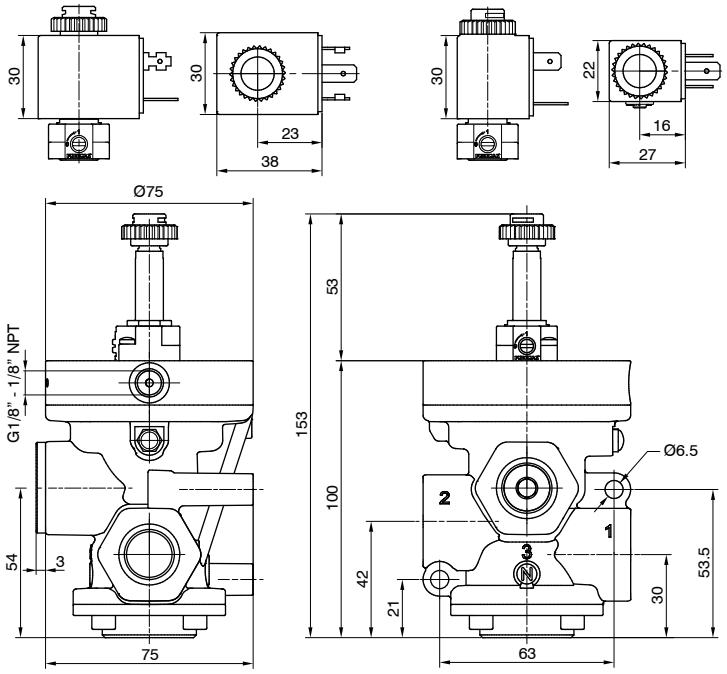

Self feeding - N.C.
Inlet port 1
Outlet port 2
Exhaust port 3 (closed)

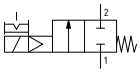

External feeding - N.C.
Inlet port 1
Outlet port 2
Exhaust port 3 (closed)

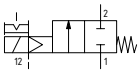

Weight 720,5 g

P©2A201(V)(F)(T)

3/2

30 mm SOLENOID COIL
Connection: DIN 43650 "A" SHAPE

22 mm SOLENOID COIL
Connection: DIN 43650 INDUSTRIAL "B" SHAPE

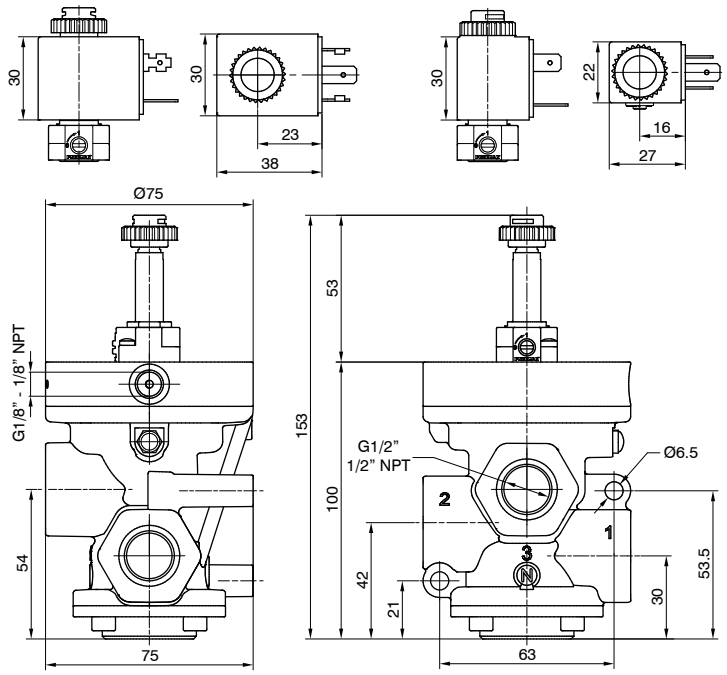

Self feeding - N.O.
Inlet port 3
Outlet port 2
Outlet port 1

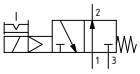

Self feeding - N.C.
Inlet port 1
Outlet port 2
Exhaust port 3

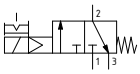

External feeding - N.O.
Inlet port 3
Outlet port 2
Outlet port 1

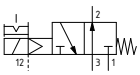

External feeding - N.C.
Inlet port 1
Outlet port 2
Exhaust port 3

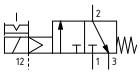

Weight 693,5 g

P©2A301(V)(F)(T)

Pneumatic - Spring

Coding: P❍2V❍11E❍00000

Operational characteristics	
Fluid	Vacuum
Minimum pilot pressure (bar)	2
Temperature °C	-5 ... +70
Orifice size (mm)	15
Working ports size	G1/2" - 1/2" NPT
Pilot ports size	G1/8" - 1/8" NPT
Max. vacuum (mmHg)	758,5

❍	CONNECTIONS
	G = Gas thread
	N = NPT thread
❍	WAYS NUMBER
	2 = 2 ways, 2 positions
	3 = 3 ways, 2 positions
❍	FUNCTION
	A = Normally Open (only for 3 ways)
	C = Normally Closed

AIR DISTRIBUTION

2/2

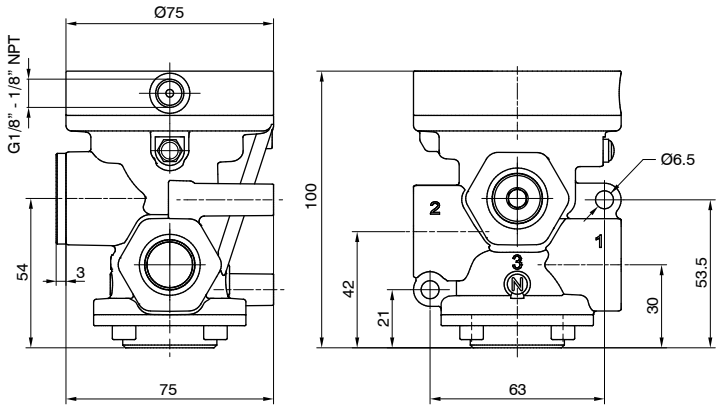

N.C.
Pump 1
Outlet port 2
Exhaust port 3 (closed)

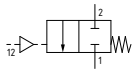

Weight 675,5 g

P❍2V211E❍00000

3/2

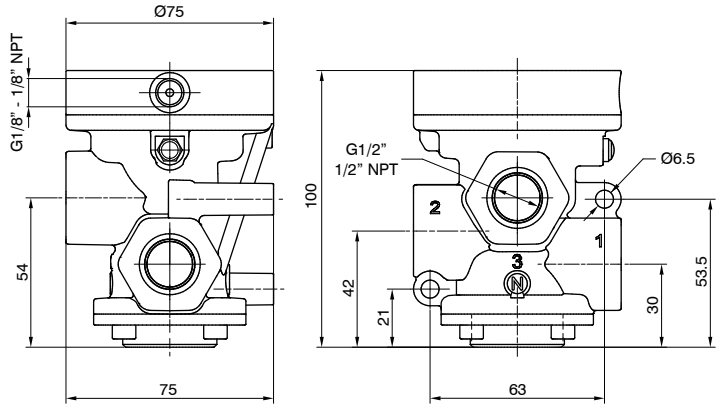

N.O.
Pump 3
Outlet port 2
Outlet port 1

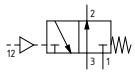

N.C.
Pump 1
Outlet port 2
Exhaust port 3

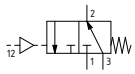

Weight 648,5 g

P❍2V311E❍00000

Overall dimensions and technical information are provided solely for informative purposes and may be modified without notice

Solenoid-Spring

Coding: PⒸ2VⓃ01ⓋⒻⓉ

Operational characteristics	
Fluid	Vacuum
Minimum pilot pressure (bar)	2 (external feeding version)
Temperature °C	-5 ... +50
Orifice size (mm)	15
Working ports size	G1/2" - 1/2" NPT
Pilot ports size	G1/8" - G1/8" NPT
Max. vacuum (mmHg)	758,5
Minimum operating vacuum (mmHg)	250 (self feeding version)

Ⓒ	CONNECTIONS
	G = Gas thread
	N = NPT thread
Ⓝ	WAYS NUMBER
	2 = 2 ways, 2 positions
	3 = 3 ways, 2 positions
Ⓥ	VERSION
	A = Self feeding
	E = External feeding
Ⓕ	FUNCTION
	A = Normally Open (only for 3 ways)
	C = Normally Closed
Ⓣ	VOLTAGE (22 MM SOLENOID COIL)
	S40B0 = 12 VDC
	S50B0 = 24 VDC
	S60B0 = 24 V 50/60 Hz
	S70B0 = 110 V 50/60 Hz
	S80B0 = 230 V 50/60 Hz
	10000 = Without solenoid coil
Ⓣ	VOLTAGE (30 MM SOLENOID COIL)
	S40C0 = 12 VDC
	S50C0 = 24 VDC
	S60C0 = 24 V 50/60 Hz
	S70C0 = 110 V 50/60 Hz
	S80C0 = 230 V 50/60 Hz
	10000 = Without solenoid coil

2/2

30 mm SOLENOID COIL
Connection: DIN 43650 "A" SHAPE

22 mm SOLENOID COIL
Connection: DIN 43650 INDUSTRIAL "B" SHAPE

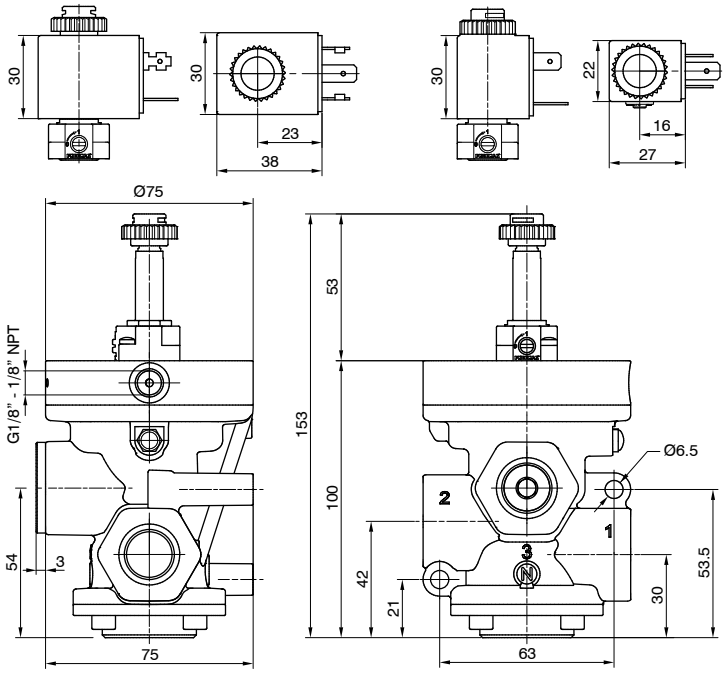

Self feeding - N.C.
Pump 3
Outlet port 2
Exhaust port 1 (closed)

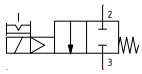

External feeding - N.C.
Pump 1
Outlet port 2
Exhaust port 3 (closed)

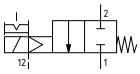

Weight 720,5 g

PⒸ2V201ⓋⒻⓉ

3/2

30 mm SOLENOID COIL
Connection: DIN 43650 "A" SHAPE

22 mm SOLENOID COIL
Connection: DIN 43650 INDUSTRIAL "B" SHAPE

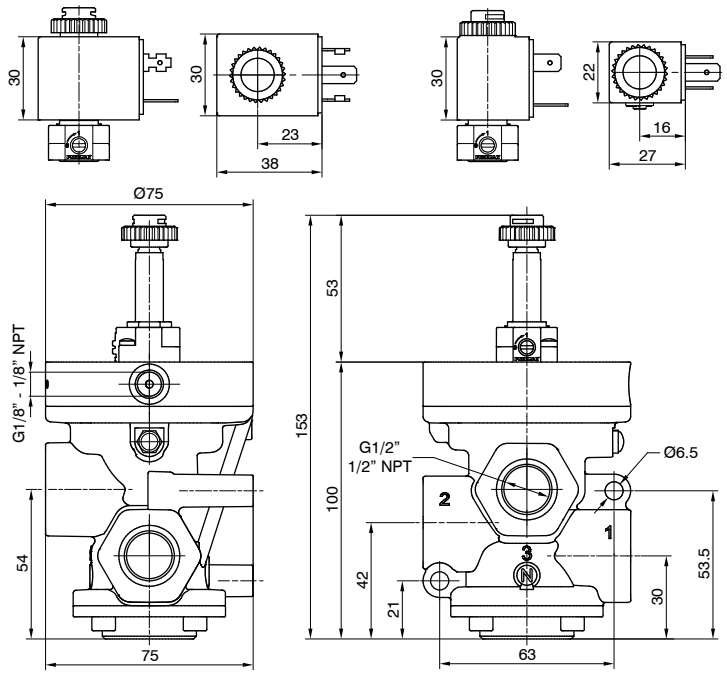

Self feeding - N.O.
Pump 1
Outlet port 2
Exhaust port 3

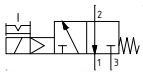

Self feeding - N.C.
Pump 3
Outlet port 2
Outlet port 1

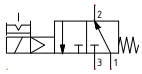

External feeding - N.O.
Pump 3
Outlet port 2
Outlet port 1

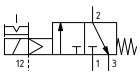

External feeding - N.C.
Pump 1
Outlet port 2
Exhaust port 3

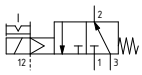

Weight 693,5 g

PⒸ2V301ⓋⒻⓉ

Pneumatic - Spring

Coding: P❍3A❍11E❍00000

Operational characteristics	
Fluid	Filtered air. No lubrication needed, if applied it shall be continuous
Max. working pressure (bar)	10
Minimum pilot pressure (bar)	2,5
Temperature °C	-5 ... +70
Flow rate at 6 bar with Δp=1 (Nl/min)	6100
Orifice size (mm)	20
Working ports size	G3/4" - 3/4" NPT
Pilot ports size	G1/8" - 1/8" NPT

❍	CONNECTIONS
	G = Gas thread
	N = NPT thread
❍	WAYS NUMBER
	2 = 2 ways, 2 positions
	3 = 3 ways, 2 positions
❍	FUNCTION
	A = Normally Open (only for 3 ways)
	C = Normally Closed

AIR DISTRIBUTION

2/2

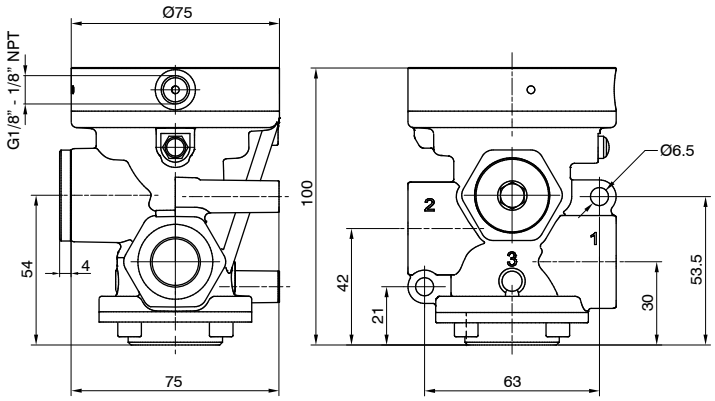

N.C.
Inlet port 1
Outlet port 2
Exhaust port 3 (closed)

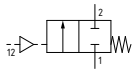

Weight 576,5 g

P❍3A211E❍00000

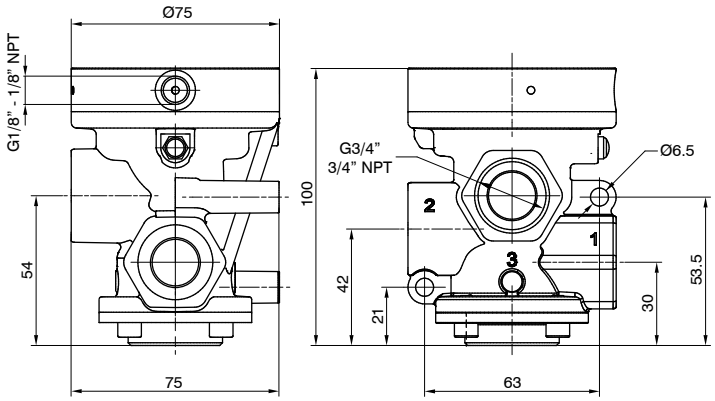

N.O.
Inlet port 3
Outlet port 2
Outlet port 1

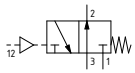

N.C.
Inlet port 1
Outlet port 2
Exhaust port 3

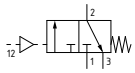

Weight 522,5 g

P❍3A311E❍00000

Overall dimensions and technical information are provided solely for informative purposes and may be modified without notice

Solenoid-Spring

Coding: PⒸ3AⓃ01ⓋⒻⓉ

Operational characteristics	
Fluid	Filtered air. No lubrication needed, if applied it shall be continuous
Max. working pressure (bar)	10
Minimum pilot pressure (bar)	2,5
Temperature °C	-5 ... +50
Flow rate at 6 bar with Δp=1 (Nl/min)	6100
Orifice size (mm)	20
Working ports size	G3/4" - 3/4" NPT
Pilot ports size	G1/8" - 1/8" NPT
Responce time according to ISO 12238, activation time (ms)	22 (self feeding version)
Responce time according to ISO 12238, deactivation time (ms)	81 (self feeding version)

Ⓒ	CONNECTIONS
	G = Gas thread
	N = NPT thread
Ⓝ	WAYS NUMBER
	2 = 2 ways, 2 positions
	3 = 3 ways, 2 positions
Ⓥ	VERSION
	A = Self feeding
	E = External feeding
Ⓕ	FUNCTION
	A = Normally Open (only for 3 ways)
	C = Normally Closed
Ⓣ	VOLTAGE (22 MM SOLENOID COIL)
	S40B0 = 12 VDC
	S50B0 = 24 VDC
	S60B0 = 24 V 50/60 Hz
	S70B0 = 110 V 50/60 Hz
	S80B0 = 230 V 50/60 Hz
	10000 = Without solenoid coil
Ⓣ	VOLTAGE (30 MM SOLENOID COIL)
	S40C0 = 12 VDC
	S50C0 = 24 VDC
	S60C0 = 24 V 50/60 Hz
	S70C0 = 110 V 50/60 Hz
	S80C0 = 230 V 50/60 Hz
	10000 = Without solenoid coil

2/2

30 mm SOLENOID COIL
Connection: DIN 43650 "A" SHAPE

22 mm SOLENOID COIL
Connection: DIN 43650 INDUSTRIAL "B" SHAPE

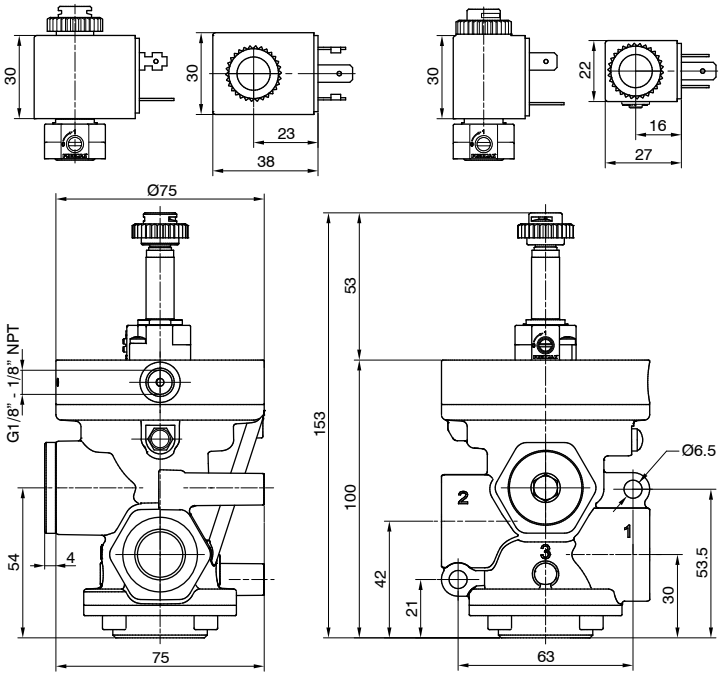

Self feeding - N.C.
Inlet port 1
Outlet port 2
Exhaust port 3 (closed)

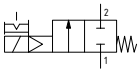

External feeding - N.C.
Inlet port 1
Outlet port 2
Exhaust port 3 (closed)

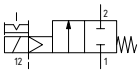

Weight 621,5 g

PⒸ3A201ⓋⒻⓉ

3/2

30 mm SOLENOID COIL
Connection: DIN 43650 "A" SHAPE

22 mm SOLENOID COIL
Connection: DIN 43650 INDUSTRIAL "B" SHAPE

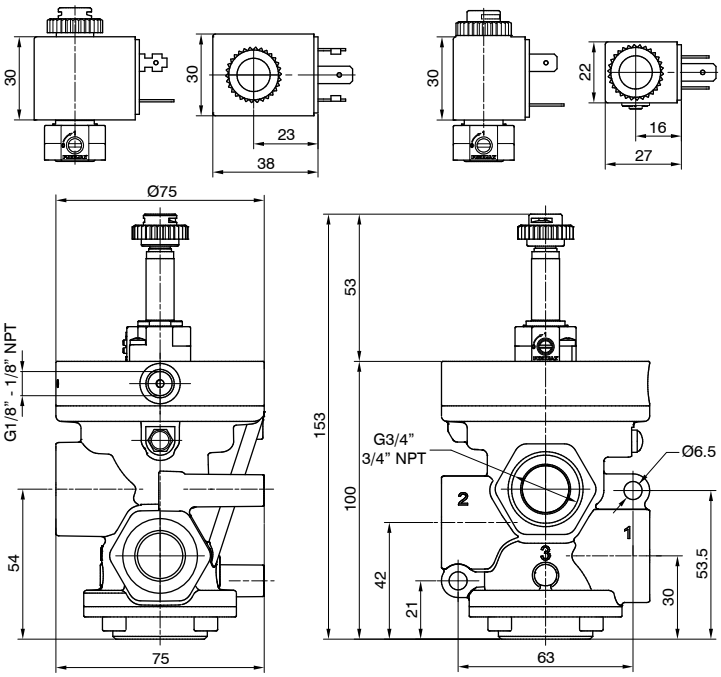

Self feeding - N.O.
Inlet port 3
Outlet port 2
Outlet port 1

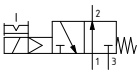

Self feeding - N.C.
Inlet port 1
Outlet port 2
Exhaust port 3

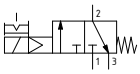

External feeding - N.O.
Inlet port 3
Outlet port 2
Outlet port 1

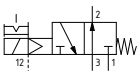

External feeding - N.C.
Inlet port 1
Outlet port 2
Exhaust port 3

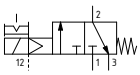

Weight 567,5 g

PⒸ3A301ⓋⒻⓉ

Pneumatic - Spring

Coding: P❍3V❍11E❍00000

Operational characteristics	
Fluid	Vacuum
Minimum pilot pressure (bar)	2
Temperature °C	-5 ... +70
Orifice size (mm)	20
Working ports size	G3/4" - 3/4" NPT
Pilot ports size	G1/8" - 1/8" NPT
Max. vacuum (mmHg)	758,5

❍	CONNECTIONS
	G = Gas thread
	N = NPT thread
❍	WAYS NUMBER
	2 = 2 ways, 2 positions
	3 = 3 ways, 2 positions
❍	FUNCTION
	A = Normally Open (only for 3 ways)
	C = Normally Closed

AIR DISTRIBUTION

2/2

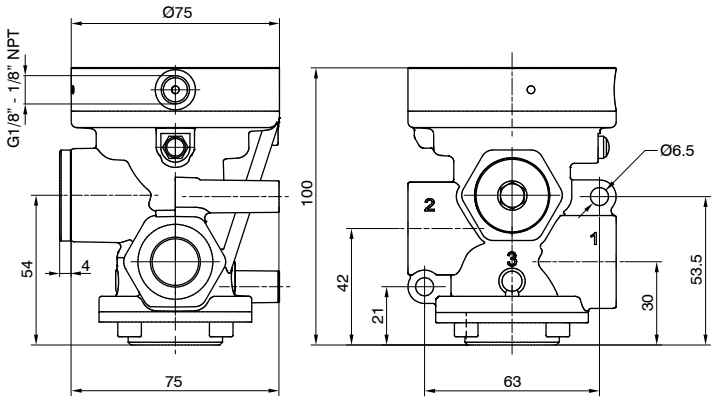

N.C.
Pump 1
Outlet port 2
Exhaust port 3 (closed)

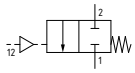

Weight 576,5 g

P❍3V211E❍00000

3/2

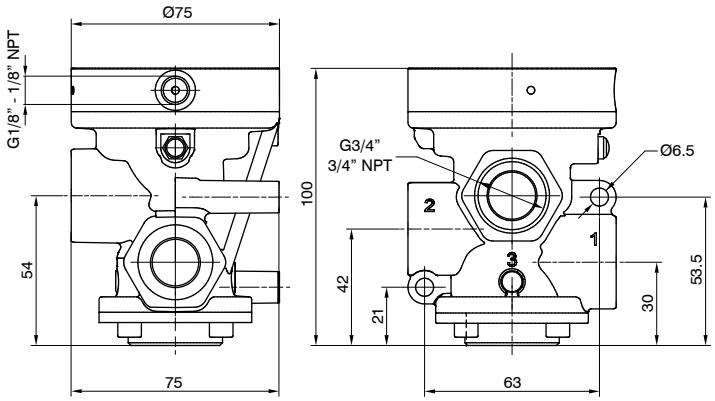

N.O.
Pump 3
Outlet port 2
Outlet port 1

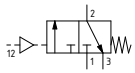

N.C.
Pump 1
Outlet port 2
Exhaust port 3

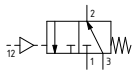

Weight 522,5 g

P❍3V311E❍00000

Overall dimensions and technical information are provided solely for informative purposes and may be modified without notice

Solenoid-Spring

Coding: P❍3V❍01❍❍❍

Operational characteristics	
Fluid	Vacuum
Minimum pilot pressure (bar)	2 (external feeding version)
Temperature °C	-5 ... +50
Orifice size (mm)	20
Working ports size	G3/4" - 3/4" NPT
Pilot ports size	G1/8" - 1/8" NPT
Max. vacuum (mmHg)	758,5
Minimum operating vacuum (mmHg)	250 (self feeding version)

❍	CONNECTIONS
	G = Gas thread
	N = NPT thread
❍	WAYS NUMBER
	2 = 2 ways, 2 positions
	3 = 3 ways, 2 positions
❍	VERSION
	A = Self feeding
	E = External feeding
❍	FUNCTION
	A = Normally Open (only for 3 ways)
	C = Normally Closed
❍	VOLTAGE (22 MM SOLENOID COIL)
	S40B0 = 12 VDC
	S50B0 = 24 VDC
	S60B0 = 24 V 50/60 Hz
	S70B0 = 110 V 50/60 Hz
	S80B0 = 230 V 50/60 Hz
	10000 = Without solenoid coil
❍	VOLTAGE (30 MM SOLENOID COIL)
	S40C0 = 12 VDC
	S50C0 = 24 VDC
	S60C0 = 24 V 50/60 Hz
	S70C0 = 110 V 50/60 Hz
	S80C0 = 230 V 50/60 Hz
	10000 = Without solenoid coil

2/2

30 mm SOLENOID COIL
Connection: DIN 43650 "A" SHAPE

22 mm SOLENOID COIL
Connection: DIN 43650 INDUSTRIAL "B" SHAPE

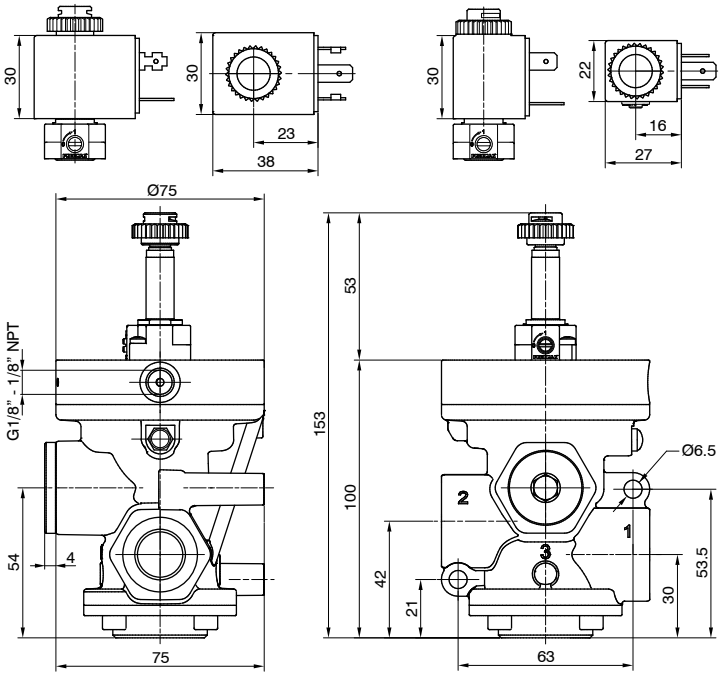

Self feeding - N.C.
Pump 3
Outlet port 2
Exhaust port 1 (closed)

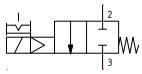

External feeding - N.C.
Pump 1
Outlet port 2
Exhaust port 3 (closed)

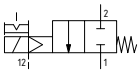

Weight 621,5 g

P❍3V201❍❍❍

3/2

30 mm SOLENOID COIL
Connection: DIN 43650 "A" SHAPE

22 mm SOLENOID COIL
Connection: DIN 43650 INDUSTRIAL "B" SHAPE

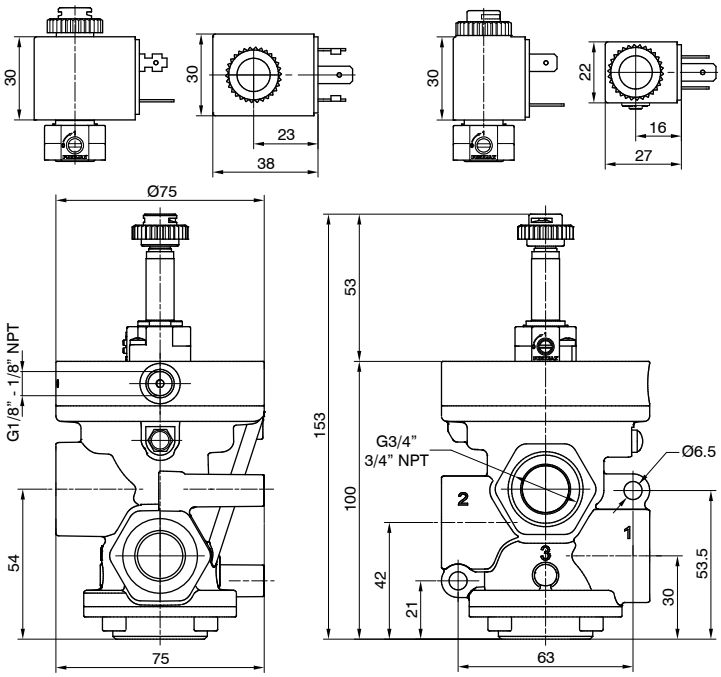

Self feeding - N.O.
Pump 1
Outlet port 2
Exhaust port 3

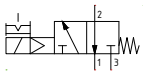

Self feeding - N.C.
Pump 3
Outlet port 2
Outlet port 1

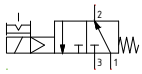

External feeding - N.O.
Pump 3
Outlet port 2
Outlet port 1

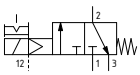

External feeding - N.C.
Pump 1
Outlet port 2
Exhaust port 3

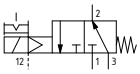

Weight 567,5 g

P❍3V301❍❍❍

Pneumatic - Spring

Coding: P❍1A❍11E❍00000

Operational characteristics	
Fluid	Filtered air. No lubrication needed, if applied it shall be continuous
Max. working pressure (bar)	10
Minimum pilot pressure (bar)	2,5
Temperature °C	-5 ... +70
Flow rate at 6 bar with Δp=1 (Nl/min)	12500
Orifice size (mm)	25
Working ports size	G1" - 1" NPT
Pilot ports size	G1/8" - 1/8" NPT

❍	CONNECTIONS
	G = Gas thread
	N = NPT thread
❍	WAYS NUMBER
	2 = 2 ways, 2 positions
	3 = 3 ways, 2 positions
❍	FUNCTION
	A = Normally Open (only for 3 ways)
	C = Normally Closed

2/2

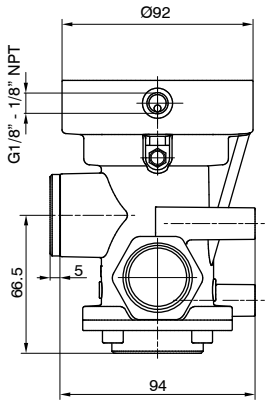

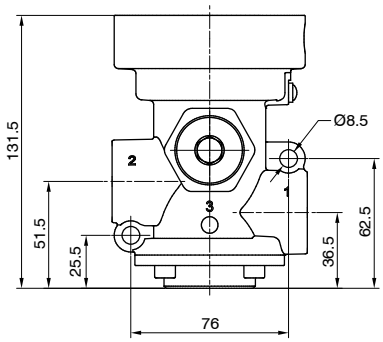

N.C.
Inlet port 1
Outlet port 2
Exhaust port 3 (closed)

Weight 1231,5 g

P❍1A211E❍00000

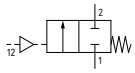

3/2

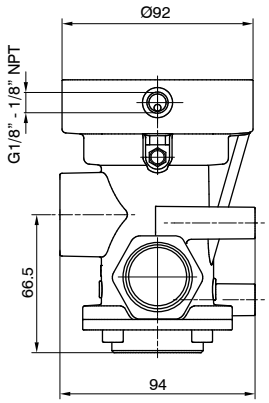

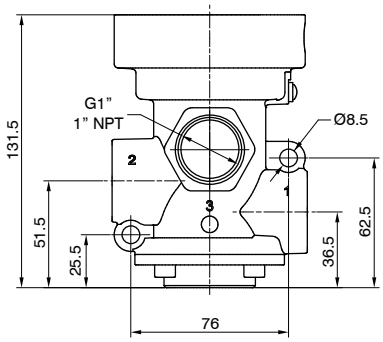

N.O.
Inlet port 3
Outlet port 2
Outlet port 1

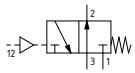

N.C.
Inlet port 1
Outlet port 2
Exhaust port 3

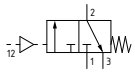

Weight 1139,5 g

P❍1A311E❍00000

Overall dimensions and technical information are provided solely for informative purposes and may be modified without notice

Solenoid-Spring

Coding: PC1AN01VFT

Operational characteristics	
Fluid	Filtered air. No lubrication needed, if applied it shall be continuous
Max. working pressure (bar)	10
Minimum pilot pressure (bar)	2,5
Temperature °C	-5 ... +50
Flow rate at 6 bar with Δp=1 (Nl/min)	12500
Orifice size (mm)	25
Working ports size	G1" - 1" NPT
Pilot ports size	G1/8" - 1/8" NPT
Responce time according to ISO 12238, activation time (ms)	27 (self feeding version)
Responce time according to ISO 12238, deactivation time (ms)	88 (self feeding version)

C	CONNECTIONS
	G = Gas thread
	N = NPT thread
N	WAYS NUMBER
	2 = 2 ways, 2 positions
	3 = 3 ways, 2 positions
V	VERSION
	A = Self feeding
	E = External feeding
F	FUNCTION
	A = Normally Open (only for 3 ways)
	C = Normally Closed
T	VOLTAGE (22 MM SOLENOID COIL)
	S40B0 = 12 VDC
	S50B0 = 24 VDC
	S60B0 = 24 V 50/60 Hz
	S70B0 = 110 V 50/60 Hz
	S80B0 = 230 V 50/60 Hz
	10000 = Without solenoid coil
T	VOLTAGE (30 MM SOLENOID COIL)
	S40C0 = 12 VDC
	S50C0 = 24 VDC
	S60C0 = 24 V 50/60 Hz
	S70C0 = 110 V 50/60 Hz
	S80C0 = 230 V 50/60 Hz
	10000 = Without solenoid coil

AIR DISTRIBUTION

2/2

30 mm SOLENOID COIL
Connection: DIN 43650 "A" SHAPE

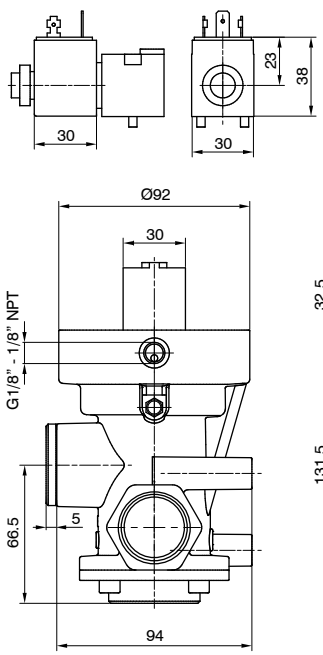

22 mm SOLENOID COIL
Connection: DIN 43650 INDUSTRIAL "B" SHAPE

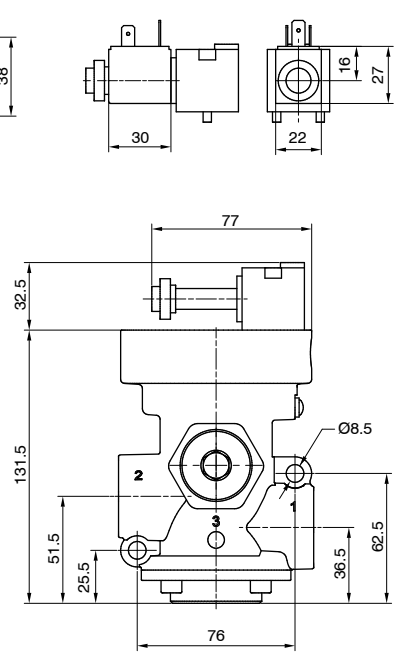

Self feeding - N.C.
Inlet port 1
Outlet port 2
Exhaust port 3 (closed)

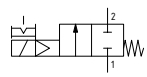

External feeding - N.C.
Inlet port 1
Outlet port 2
Exhaust port 3 (closed)

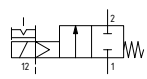

Weight 1290 g

PC1A201VFT

3/2

30 mm SOLENOID COIL
Connection: DIN 43650 "A" SHAPE

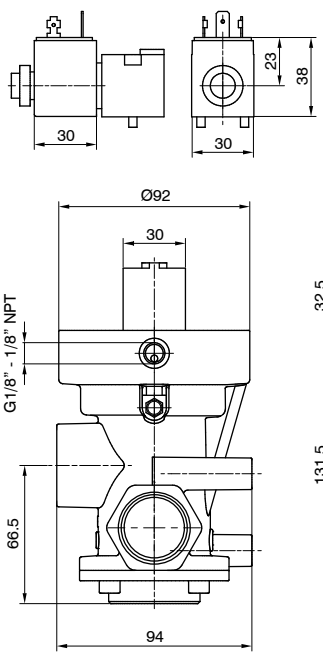

22 mm SOLENOID COIL
Connection: DIN 43650 INDUSTRIAL "B" SHAPE

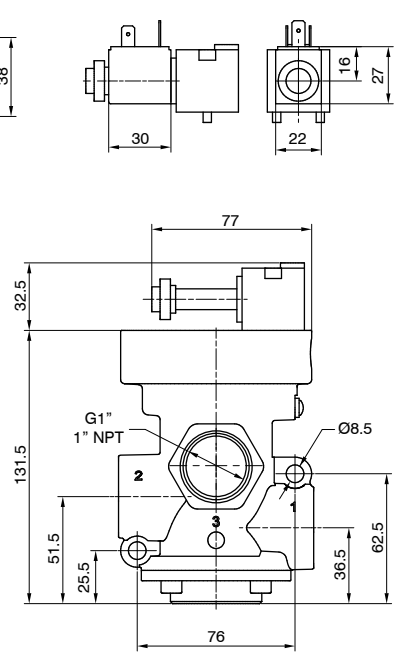

Self feeding - N.O.
Inlet port 3
Outlet port 2
Outlet port 1

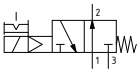

Self feeding - N.C.
Inlet port 1
Outlet port 2
Exhaust port 3

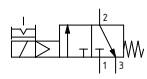

External feeding - N.O.
Inlet port 3
Outlet port 2
Outlet port 1

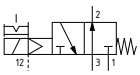

External feeding - N.C.
Inlet port 1
Outlet port 2
Exhaust port 3

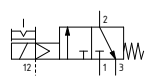

Weight 1198 g

PC1A301VFT

Pneumatic - Spring

Coding: P❍1V❍11E❍00000

Operational characteristics	
Fluid	Vacuum
Minimum pilot pressure (bar)	2
Temperature °C	-5 ... +70
Orifice size (mm)	25
Working ports size	G1" - 1" NPT
Pilot ports size	G1/8" - 1/8" NPT
Max. vacuum (mmHg)	758,5

❍	CONNECTIONS
	G = Gas thread
	N = NPT thread
❍	WAYS NUMBER
	2 = 2 ways, 2 positions
	3 = 3 ways, 2 positions
❍	FUNCTION
	A = Normally Open (only for 3 ways)
	C = Normally Closed

AIR DISTRIBUTION

2/2

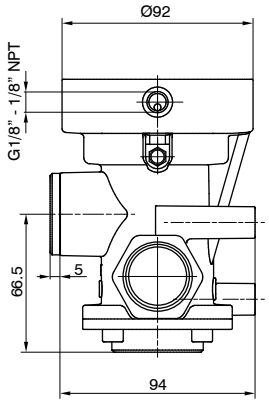

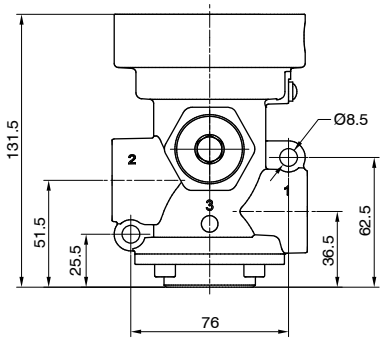

N.C.
Pump 1
Outlet port 2
Exhaust port 3 (closed)

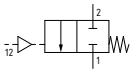

Weight 1231,5 g

P❍1V211E❍00000

3/2

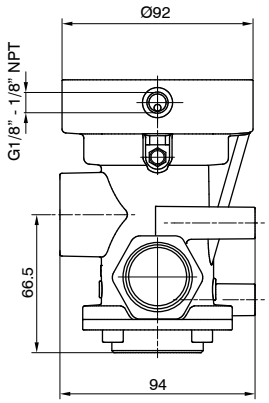

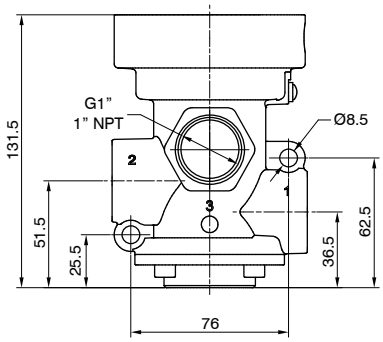

N.O.
Pump 3
Outlet port 2
Outlet port 1

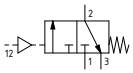

N.C.
Pump 1
Outlet port 2
Exhaust port 3

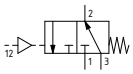

Weight 1139,5 g

P❍1V311E❍00000

Overall dimensions and technical information are provided solely for informative purposes and may be modified without notice

Solenoid-Spring

Coding: P Ⓒ 1V Ⓝ 01 Ⓥ Ⓕ Ⓣ

Operational characteristics	
Fluid	Vacuum
Minimum pilot pressure (bar)	2 (external feeding version)
Temperature °C	-5 ... +50
Orifice size (mm)	25
Working ports size	G1" - 1" NPT
Pilot ports size	G1/8" - 1/8" NPT
Max. vacuum (mmHg)	758,5
Minimum operating vacuum (mmHg)	250 (self feeding version)

Ⓒ	CONNECTIONS
	G = Gas thread
	N = NPT thread
Ⓝ	WAYS NUMBER
	2 = 2 ways, 2 positions
	3 = 3 ways, 2 positions
Ⓥ	VERSION
	A = Self feeding
	E = External feeding
Ⓕ	FUNCTION
	A = Normally Open (only for 3 ways)
	C = Normally Closed
Ⓣ	VOLTAGE (22 MM SOLENOID COIL)
	S40B0 = 12 VDC
	S50B0 = 24 VDC
	S60B0 = 24 V 50/60 Hz
	S70B0 = 110 V 50/60 Hz
	S80B0 = 230 V 50/60 Hz
	10000 = Without solenoid coil
Ⓣ	VOLTAGE (30 MM SOLENOID COIL)
	S40C0 = 12 VDC
	S50C0 = 24 VDC
	S60C0 = 24 V 50/60 Hz
	S70C0 = 110 V 50/60 Hz
	S80C0 = 230 V 50/60 Hz
	10000 = Without solenoid coil

AIR DISTRIBUTION

2/2

30 mm SOLENOID COIL
Connection: DIN 43650 "A" SHAPE

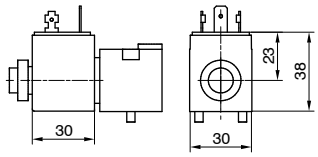

22 mm SOLENOID COIL
Connection: DIN 43650 INDUSTRIAL "B" SHAPE

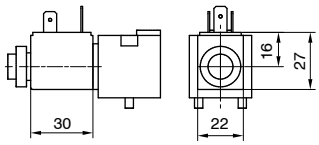

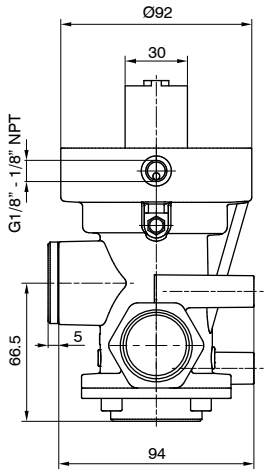

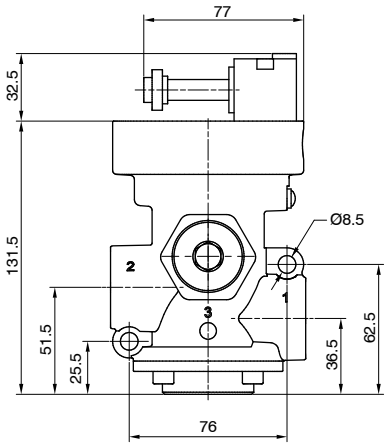

Self feeding - N.C.
Pump 3
Outlet port 2
Exhaust port 1 (closed)

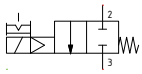

External feeding - N.C.
Pump 1
Outlet port 2
Exhaust port 3 (closed)

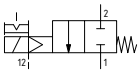

Weight 1290 g

P Ⓒ 1V201 Ⓥ Ⓕ Ⓣ

3/2

30 mm SOLENOID COIL
Connection: DIN 43650 "A" SHAPE

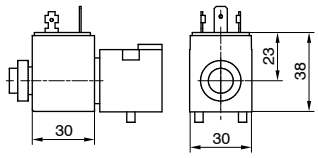

22 mm SOLENOID COIL
Connection: DIN 43650 INDUSTRIAL "B" SHAPE

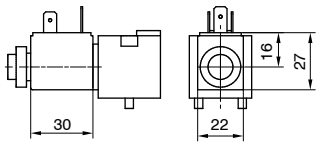

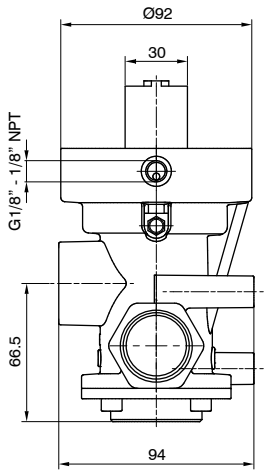

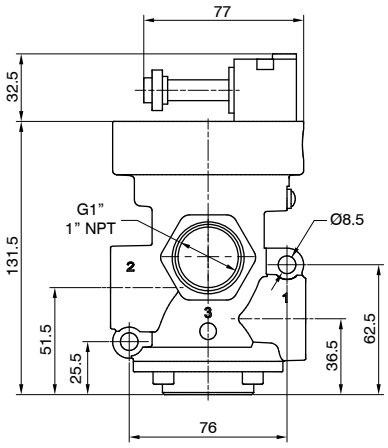

Self feeding - N.O.
Pump 1
Outlet port 2
Exhaust port 3

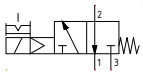

Self feeding - N.C.
Pump 3
Outlet port 2
Outlet port 1

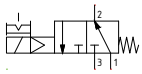

External feeding - N.O.
Pump 3
Outlet port 2
Outlet port 1

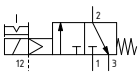

External feeding - N.C.
Pump 1
Outlet port 2
Exhaust port 3

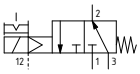

Weight 1198 g

P Ⓒ 1V301 Ⓥ Ⓕ Ⓣ

Pneumatic - Spring

Coding: P❍6A❍11E❍00000

Operational characteristics	
Fluid	Filtered air. No lubrication needed, if applied it shall be continuous
Max. working pressure (bar)	10
Minimum pilot pressure (bar)	3
Temperature °C	-5 ... +70
Flow rate at 6 bar with Δp=1 (Nl/min)	33500
Orifice size (mm)	38
Working ports size	G1 1/2" - 1 1/2" NPT
Pilot ports size	G1/8" - 1/8" NPT

❍	CONNECTIONS
	G = Gas thread
	N = NPT thread
❍	WAYS NUMBER
	2 = 2 ways, 2 positions
	3 = 3 ways, 2 positions
❍	FUNCTION
	A = Normally Open (only for 3 ways)
	C = Normally Closed

AIR DISTRIBUTION

2/2

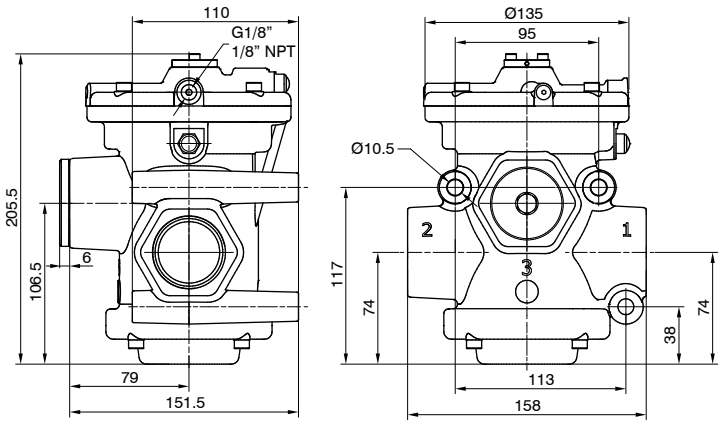

N.C.
Inlet port 1
Outlet port 2
Exhaust port 3 (closed)

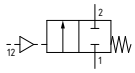

Weight 3417 g

P❍6A211E❍00000

3/2

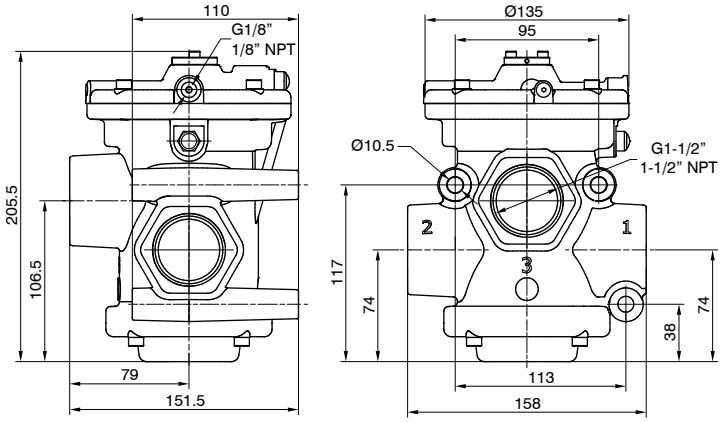

N.O.
Inlet port 3
Outlet port 2
Outlet port 1

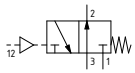

N.C.
Inlet port 1
Outlet port 2
Exhaust port 3

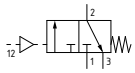

Weight 3168 g

P❍6A311E❍00000

Overall dimensions and technical information are provided solely for informative purposes and may be modified without notice

Solenoid-Spring

Coding: PⒸ6AⓃ01ⓋⒻⓉ

Operational characteristics	
Fluid	Filtered air. No lubrication needed, if applied it shall be continuous
Max. working pressure (bar)	10
Minimum pilot pressure (bar)	3
Temperature °C	-5 ... +50
Flow rate at 6 bar with Δp=1 (Nl/min)	33500
Orifice size (mm)	38
Working ports size	G1 1/2" - 1 1/2" NPT
Pilot ports size	G1/8" - 1/8" NPT
Responce time according to ISO 12238, activation time (ms)	182 (self feeding version)
Responce time according to ISO 12238, deactivation time (ms)	78 (self feeding version)

Ⓒ	CONNECTIONS
	G = Gas thread
	N = NPT thread
Ⓝ	WAYS NUMBER
	2 = 2 ways, 2 positions
	3 = 3 ways, 2 positions
Ⓥ	VERSION
	A = Self feeding
	E = External feeding
Ⓕ	FUNCTION
	A = Normally Open (only for 3 ways)
	C = Normally Closed
Ⓣ	VOLTAGE (22 MM SOLENOID COIL)
	S40B0 = 12 VDC
	S50B0 = 24 VDC
	S60B0 = 24 V 50/60 Hz
	S70B0 = 110 V 50/60 Hz
	S80B0 = 230 V 50/60 Hz
	10000 = Without solenoid coil
Ⓣ	VOLTAGE (30 MM SOLENOID COIL)
	S40C0 = 12 VDC
	S50C0 = 24 VDC
	S60C0 = 24 V 50/60 Hz
	S70C0 = 110 V 50/60 Hz
	S80C0 = 230 V 50/60 Hz
	10000 = Without solenoid coil

AIR DISTRIBUTION

2/2

30 mm SOLENOID COIL
Connection: DIN 43650 "A" SHAPE

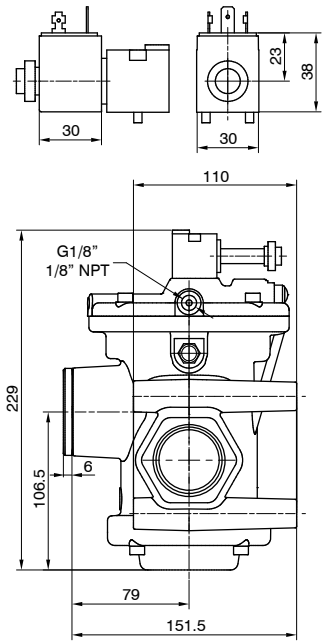

22 mm SOLENOID COIL
Connection: DIN 43650 INDUSTRIAL "B" SHAPE

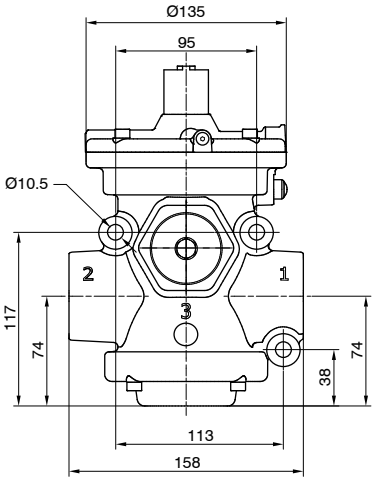

Weight 3491,5 g

PⒸ6A201ⓋⒻⓉ

Self feeding - N.C.
Inlet port 1
Outlet port 2
Exhaust port 3 (closed)

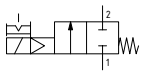

External feeding - N.C.
Inlet port 1
Outlet port 2
Exhaust port 3 (closed)

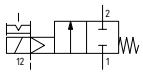

3/2

30 mm SOLENOID COIL
Connection: DIN 43650 "A" SHAPE

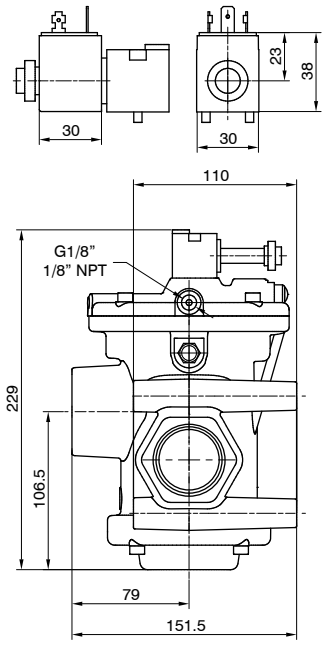

22 mm SOLENOID COIL
Connection: DIN 43650 INDUSTRIAL "B" SHAPE

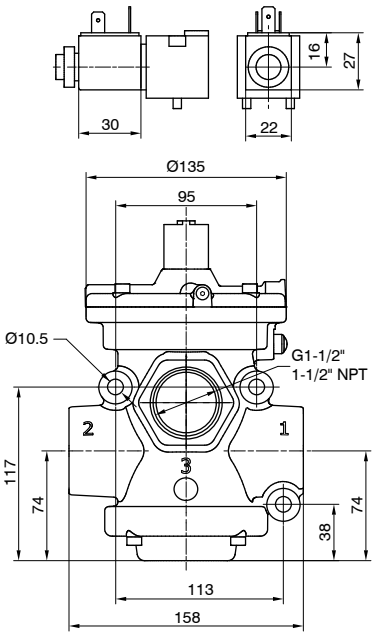

Weight 3242,5 g

PⒸ6A301ⓋⒻⓉ

Self feeding - N.O.
Inlet port 3
Outlet port 2
Outlet port 1

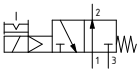

Self feeding - N.C.
Inlet port 1
Outlet port 2
Exhaust port 3

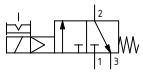

External feeding - N.O.
Inlet port 3
Outlet port 2
Outlet port 1

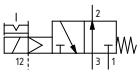

External feeding - N.C.
Inlet port 1
Outlet port 2
Exhaust port 3

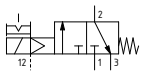

Pneumatic - Spring

Coding: P❍6V❍11E❍00000

Operational characteristics	
Fluid	Vacuum
Minimum pilot pressure (bar)	2
Temperature °C	-5 ... +70
Orifice size (mm)	38
Working ports size	G1 1/2" - 1 1/2" NPT
Pilot ports size	G1/8" - 1/8" NPT
Max. vacuum (mmHg)	758,5

❍	CONNECTIONS
	G = Gas thread
	N = NPT thread
❍	WAYS NUMBER
	2 = 2 ways, 2 positions
	3 = 3 ways, 2 positions
❍	FUNCTION
	A = Normally Open (only for 3 ways)
	C = Normally Closed

AIR DISTRIBUTION

2/2

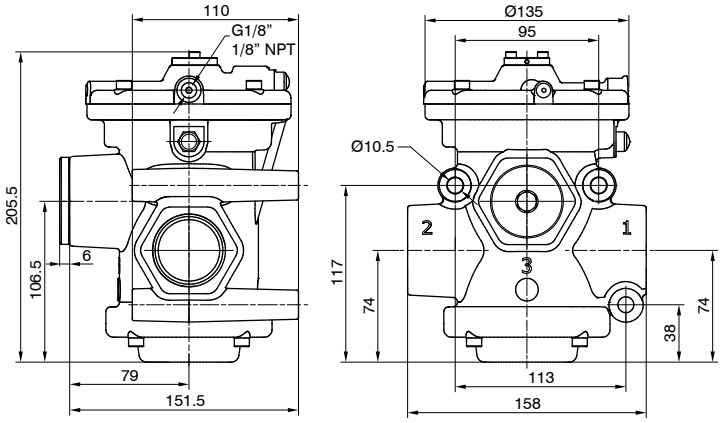

N.C.
Pump 1
Outlet port 2
Exhaust port 3 (closed)

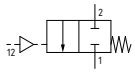

Weight 3417 g

P❍6V211E❍00000

3/2

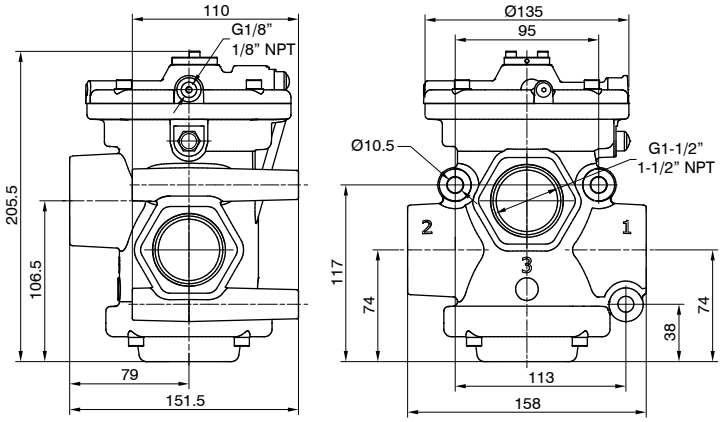

N.O.
Pump 3
Outlet port 2
Outlet port 1

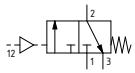

N.C.
Pump 1
Outlet port 2
Exhaust port 3

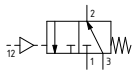

Weight 3168 g

P❍6V311E❍00000

Overall dimensions and technical information are provided solely for informative purposes and may be modified without notice

Solenoid-Spring

Coding: PⒸ6VⓃ01ⓋⒻⓉ

Operational characteristics	
Fluid	Vacuum
Minimum pilot pressure (bar)	2 (external feeding version)
Temperature °C	-5 ... +50
Orifice size (mm)	38
Working ports size	G1 1/2" - 1 1/2" NPT
Pilot ports size	G1/8" - 1/8" NPT
Max. vacuum (mmHg)	758,5
Minimum operating vacuum (mmHg)	250 (self feeding version)

Ⓒ	CONNECTIONS
	G = Gas thread
	N = NPT thread
Ⓝ	WAYS NUMBER
	2 = 2 ways, 2 positions
	3 = 3 ways, 2 positions
Ⓥ	VERSION
	A = Self feeding
	E = External feeding
Ⓕ	FUNCTION
	A = Normally Open (only for 3 ways)
	C = Normally Closed
Ⓣ	VOLTAGE (22 MM SOLENOID COIL)
	S40B0 = 12 VDC
	S50B0 = 24 VDC
	S60B0 = 24 V 50/60 Hz
	S70B0 = 110 V 50/60 Hz
	S80B0 = 230 V 50/60 Hz
	10000 = Without solenoid coil
Ⓣ	VOLTAGE (30 MM SOLENOID COIL)
	S40C0 = 12 VDC
	S50C0 = 24 VDC
	S60C0 = 24 V 50/60 Hz
	S70C0 = 110 V 50/60 Hz
	S80C0 = 230 V 50/60 Hz
	10000 = Without solenoid coil

AIR DISTRIBUTION

2/2

30 mm SOLENOID COIL
Connection: DIN 43650 "A" SHAPE

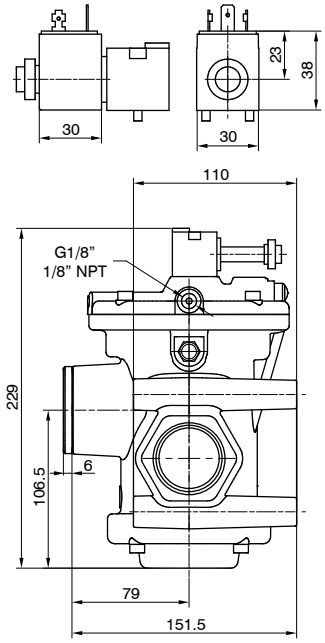

22 mm SOLENOID COIL
Connection: DIN 43650 INDUSTRIAL "B" SHAPE

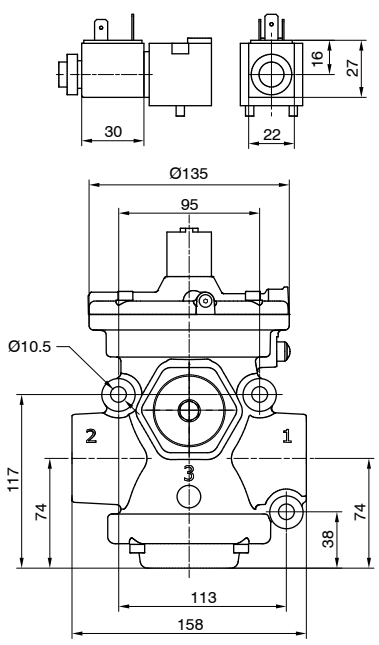

Self feeding - N.C.
Pump 3
Outlet port 2
Exhaust port 1 (closed)

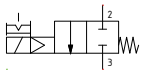

External feeding - N.C.
Pump 1
Outlet port 2
Exhaust port 3 (closed)

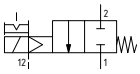

Weight 3491,5 g

PⒸ6V201ⓋⒻⓉ

3/2

30 mm SOLENOID COIL
Connection: DIN 43650 "A" SHAPE

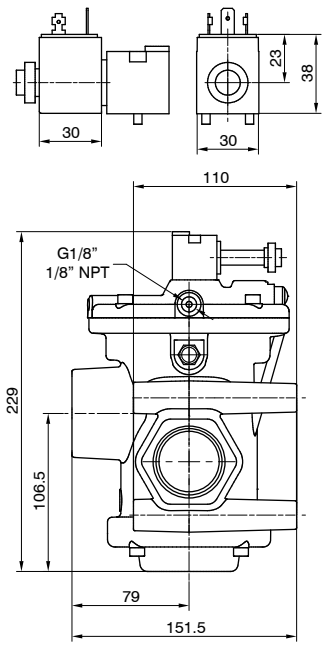

22 mm SOLENOID COIL
Connection: DIN 43650 INDUSTRIAL "B" SHAPE

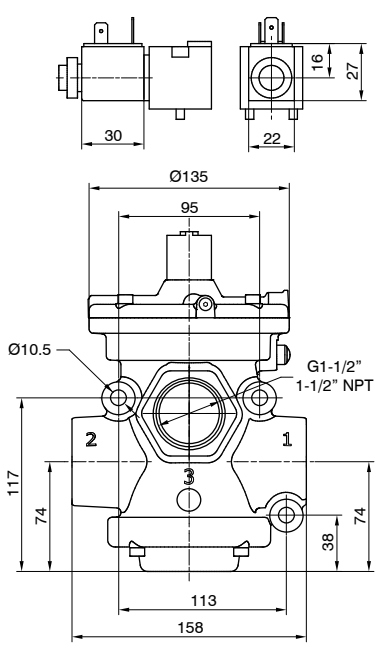

Self feeding - N.O.
Pump 1
Outlet port 2
Exhaust port 3

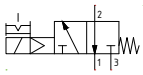

Self feeding - N.C.
Pump 3
Outlet port 2
Outlet port 1

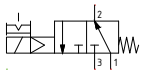

External feeding - N.O.
Pump 3
Outlet port 2
Outlet port 1

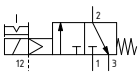

External feeding - N.C.
Pump 1
Outlet port 2
Exhaust port 3

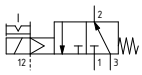

Weight 3242,5 g

PⒸ6V301ⓋⒻⓉ

PNEUMAX S.p.A.
Via Cascina Barbellina, 10
24050 Lurano (BG) - Italy
P. +39 035 41 92 777
info@pneumaxspa.com

D.NW.106-EN-REV.B-08/2024