GENERAL CATALOGUE

Components for Pneumatic Automation

2018 Edition

PNEUMAX GREEN LINE: TECHNOLOGY & INNOVATION

PNEUMAX®

www.pneumaxspa.com

Warnings

PNEUMAX GREEN LINE: technology & innovation

Pneumax reserves the right to modify the dimensions or technical characteristics of any of its products contained within this catalogue without prior notice.
The products included in this catalogue should only be used in applications for which they were originally intended and should only be used by personnel with adequate technical knowledge, PLEASE NOTE: That the misuse of this product could cause serious injury.
The user should ensure that the product is installed and operated within the operating characteristics shown and that this complies with any health and safety requirements, however should you require any further information please do not hesitate to contact our Technical office.

Pneumax S.p.A. accepts no liability for damage or injury arising from the error, misuse or omission in the data provided.
Pneumax S.p.A. accepts no liability from third parties in the form of consequential losses.

It is the responsibility and duty of the client/user to ensure that all operating requirements are carried out and that the products are used safely.
The application is always the responsibility of the client/user.

PNEUMAX

company

PNEUMAX GREEN LINE: technology & innovation

Established in 1976 Pneumax has, over the years, achieved a role of primary importance in the pneumatic and automation world. Its strength is, and always has been, the capacity to offer innovative, modern products supported by great productive power.

The head office is situated in Lurano in the Bergamo province and covers an area of 94,000 square meters, 54,000 of which are office and manufacturing facilities. The machining departments are equipped with the latest design machine tools, which enable Pneumax to produce, with extreme ease and flexibility, all components needed for production processes.

Pneumax employees now number more than 370 between offices and production departments, operating in a stimulating, modern and comfortable environment. All processes are integrated with a company Quality Management System, operating in accordance with ISO 9001:2008 - 14001:2004 (Eenvironmental Management System), and OHSAS 18001:2007 (Occupational Health and Safety Management System).

Most of the company's resources are invested in the commercial expansion and strengthening of our productive capabilities, both of which are key aspects of our management policy.

The company is owned by two families and the proprietors are active within the company, ensuring continuity over time and focus on the set objectives.

growth

products

The complete and innovative product range offered by Pneumax offers intelligent solutions to all application problems.
Beginning with air preparation units, moving on to air management devices such as manual and solenoid operated valves and finally through to actuators, cylinders and handling equipment; Pneumax can always offer the right product.
The range is complemented by the most advanced electronic components, in the form of serial communication modules, which can be integrated, with most ranges of valves, helping reduce and optimise wiring procedures. Accessories, such as fittings, cylinder mountings, sensors, flow regulators, check valves, timers, pressure boosters, etc. complete the range. Special care has been taken in the design and manufacturing of the latest series of products; by selecting innovative and technologically advanced materials, high performance and long life are guaranteed.

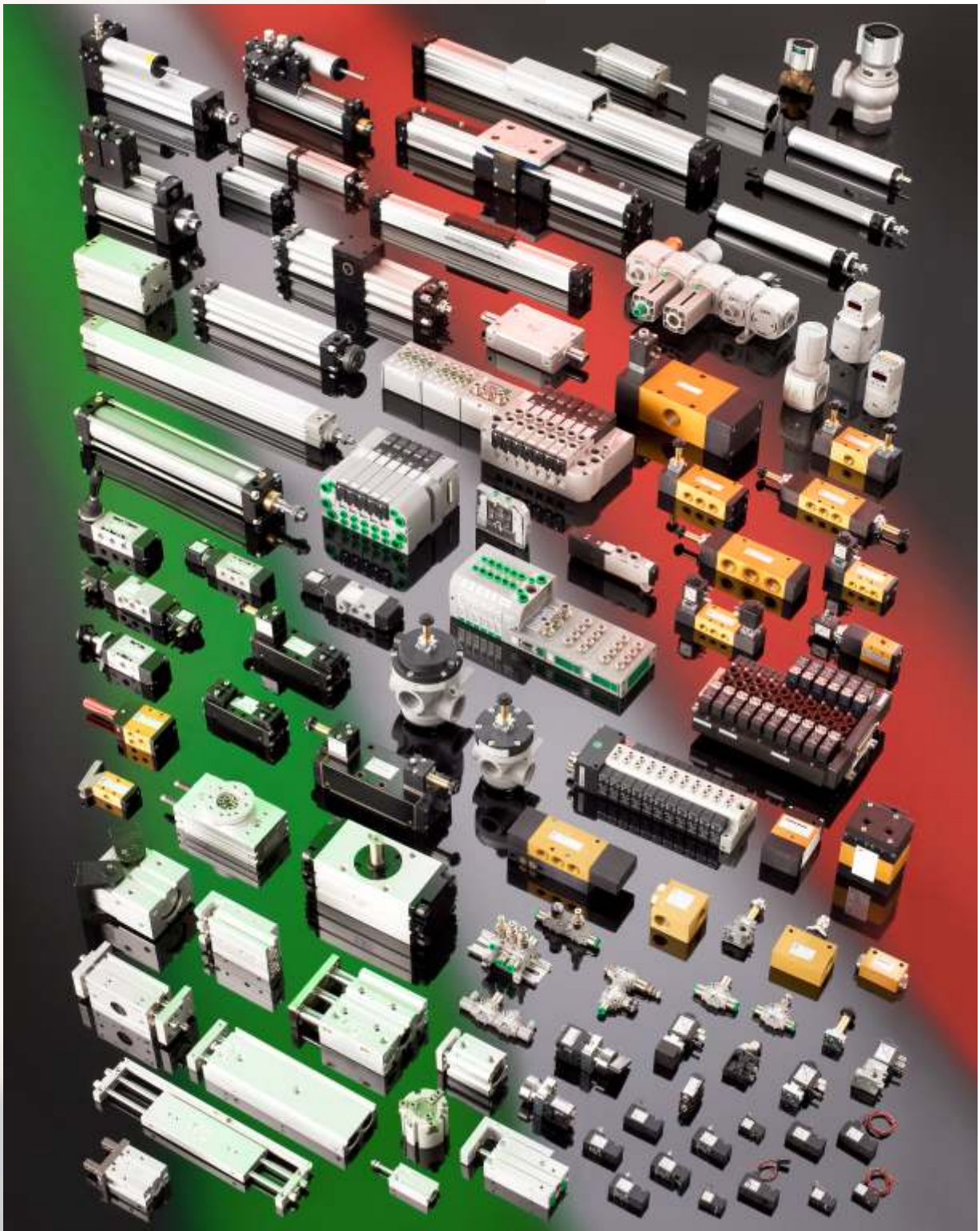

branches

PNEUMAX GREEN LINE: technology & innovation

SUPERMECCANICA - TITAN

Pneumax S.p.A. is the mother company of 21 branches, of which 3 are dedicated to manufacturing, with the balance mainly involved in sales activities; all operations are co-ordinated by Pneumax headquarters.

The role of the 3 manufacturing units is to provide special products or services.

This is the case with Supermeccanica who specialize in a variety of machining processes.

Titan Engineering distribute fittings, plastic tubing and accessories.

Their experience is in providing quality performance at competitive prices, which allows the mother company to co-ordinate these skills into continuous market development.

sales network

PNEUMAX GREEN LINE: technology & innovation

PNEUMAX SpA
24050 LURANO (BG) - Italia
Via Cascina Barbellina, 10
Tel. 035/4192777
Fax 035/4192740
035/4192741
http://www.pneumaxspa.com

CAP. SOC. €. 2.700.000 I.V.
R.E.A. BERGAMO N. 160798
R.E.A. MILANO N. 931262
COD. FISC. E P.IVA N.02893330163
COD. MECC. MI 322178

Italy

ABRUZZO - MARCHE

PNEUMATEC S.r.l.
Via Ancona, 42
61010 TAVULLIA (PU)
Tel. 0721 202762
info@pneumatec.it
www.pneumatec.it

BASILICATA - CAMPANIA - CALABRIA - MOLISE PUGLIA - LAZIO - SARDEGNA - SICILIA

PNEUMAX SUD S.r.l.
Via dei Bucaneve snc
70026 MODUGNO (BA)
Tel. 080 9645904
info@pneumaxsud.it
www.pneumaxsud.it

EMILIA - ROMAGNA

AIR FLUID CENTER
Via Machiavelli (angolo Via Pirandello)
29100 PIACENZA
Tel. 0523 490800
info@airfluidcenter.com
www.airfluidcenter.com

A.I.R. PNEUMATIC CENTER S.r.l.
Via J. Gutemberg
47038 SANTARCANGELO di ROMAGNA (RN)
Tel. 0541 624314
info@airpneumatic.it
www.airpneumatic.it

C.A.I. Centro Aut. Industriali S.r.l.
Via Piave, 33/35
40064, OZZANO EMILIA (BO)
Tel. 051 799391
info@cai-srl.it
www.cai-srl.it

F.I.A.P. S.r.l.
Via Palach 75 (angolo via dalla costa)
Villaggio Torrazzi, 41122 MODENA
Tel. 059 311146
info@fiapspa.it
www.fiapspa.it

F.I.P. S.p.A.
Via Beniamino Franklin, 31
Q.re SPIP, zona commerciale Cittadella
43100,PARMA
Tel. 0521 606132
info@fipspa.eu
www.fip-srl.it

LOMBARDIA

PNEUMAX MILANO BRIANZA S.r.l.
Via Alberto I° re dei Belgi, 13
20052 MONZA (MB)
Tel. 039 736176
info@pneumaxmb.it
www.pneumaxmilanobrianza.it

PNEUMAX SERVICE S.r.l.
Via Mons. Portaluppi, 13
24049 VERDELLO (BG)
Tel. 035 4820540
info@pneumax-service.it
www.pneumax-service.it

CL TECNICA s.n.c.
Via Manzoni, 26
23841, Annone di Brianza (LC)
Tel: 0341 263115
Fax: 0341 577811
Mail : info@cltecnica.it
web: http://www.cltecnica.it/

FILIALE
Via Roma, 43/A
23813, Cortenova (LC)
Tel: 0341 901455
Fax: 0341 901352
P. IVA: 02189530138
Mail : info@cltecnica.it
web: http://www.cltecnica.it/

FLUIDMEC S.p.A.
Via Gussalli, 4
25131 Brescia (BS)
Tel. 030 2686511
assistenza.online@fluidmec.it
www.fluidmec.it

INTERFLUID S.r.l.
Via Lazzaretto, 10 F
21013 GALLARATE (VA)
Tel. 0331 772410
info@interfuid.it
www.interfuid.it

LAZIO

S.I.R.I. S.r.l.
Via della Meccanica 19
04011 APRILIA (LT)
Tel. 06 9206291
info@sirisrl.com
http://www.sirisrl.com

LIGURIA - VALLE D'AOSTA

PNEUMAX TORINO S.r.l.
Corso Allamano 34
10095,Grugliasco (TO)
Tel. 011 4143656
info@pneumaxtorino.com
www.pneumaxtorino.com

PIEMONTE

PNEUMAX TORINO S.r.l.
Corso Allamano 34
10095,Grugliasco (TO)
Tel. 011 4143656
info@pneumaxtorino.com
www.pneumaxtorino.com

TOSCANA

FLUIDODINAMICA TOSCANA S.r.l.
Via Caravaggio,19
50028, Tavarnelle val di Pesa (FI)
Tel. 055 8071307
toscana@fuido.info
www.fuidodinamicatoscana.it

UMBRIA

OLEODINAMICA PALMERINI S.r.l.
Via dell'industria - Zona Ind.
Molinaccio
06087 PONTE SAN GIOVANNI (PG)
Tel. 075 393753 - 398541/2
oleodinamica@palmerini.com
www.palmerini.com

VENETO - TRENTINO ALTO ADIGE FRIULI VENEZIA GIULIA

PNEUMAX VENETO S.r.l.
Viale della Tecnica
36100 VICENZA
Tel. 0444 289011
info@pneumaxveneto.it
www.pneumaxveneto.it

sales network

PNEUMAX GREEN LINE: technology & innovation

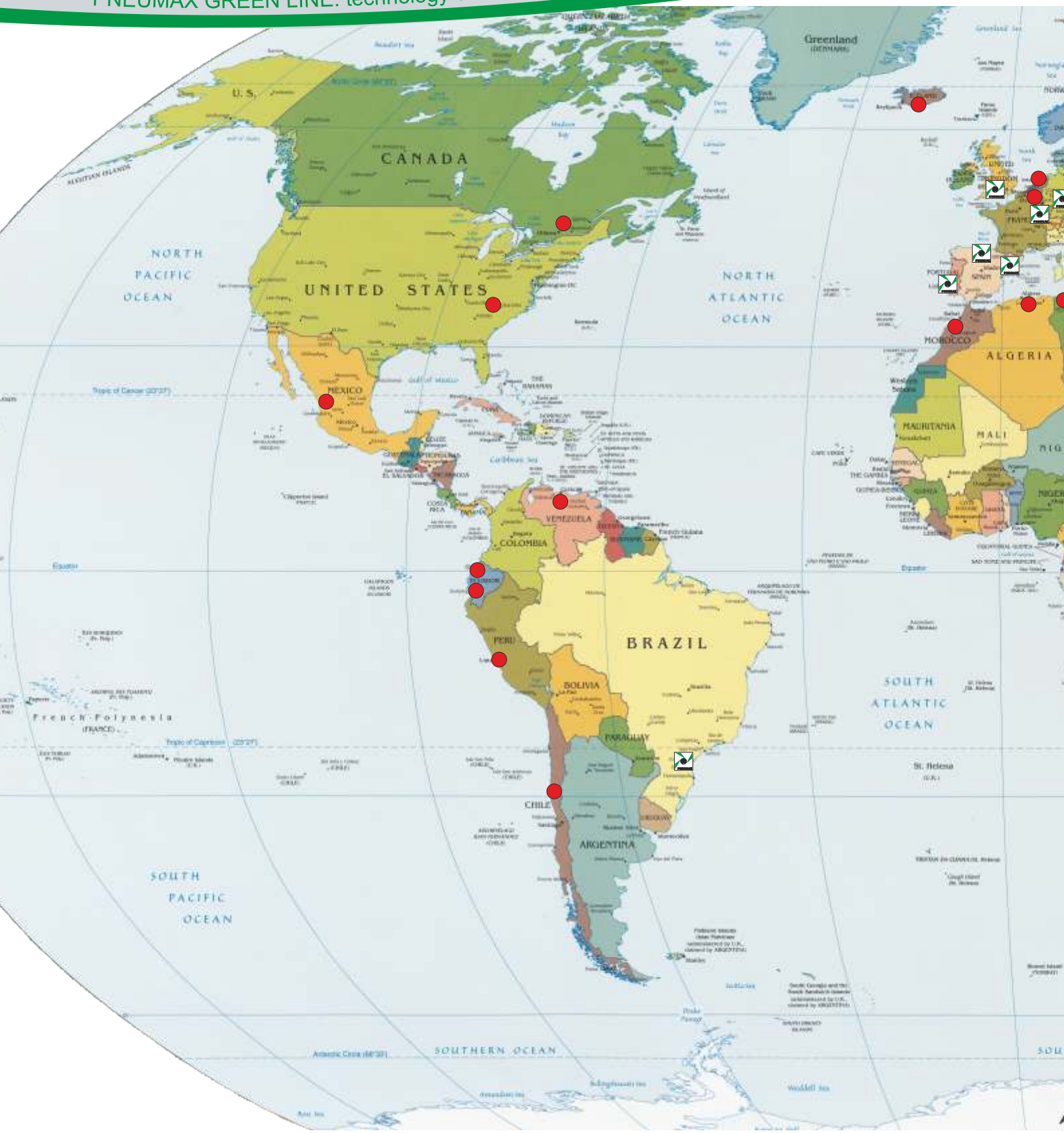

PNEUMAX S.p.A. has a direct presence in the most important markets and the **Pneumax Holding group** now controls 21 companies (18 trading, 3 manifacturing)with more than 550 employees .

World

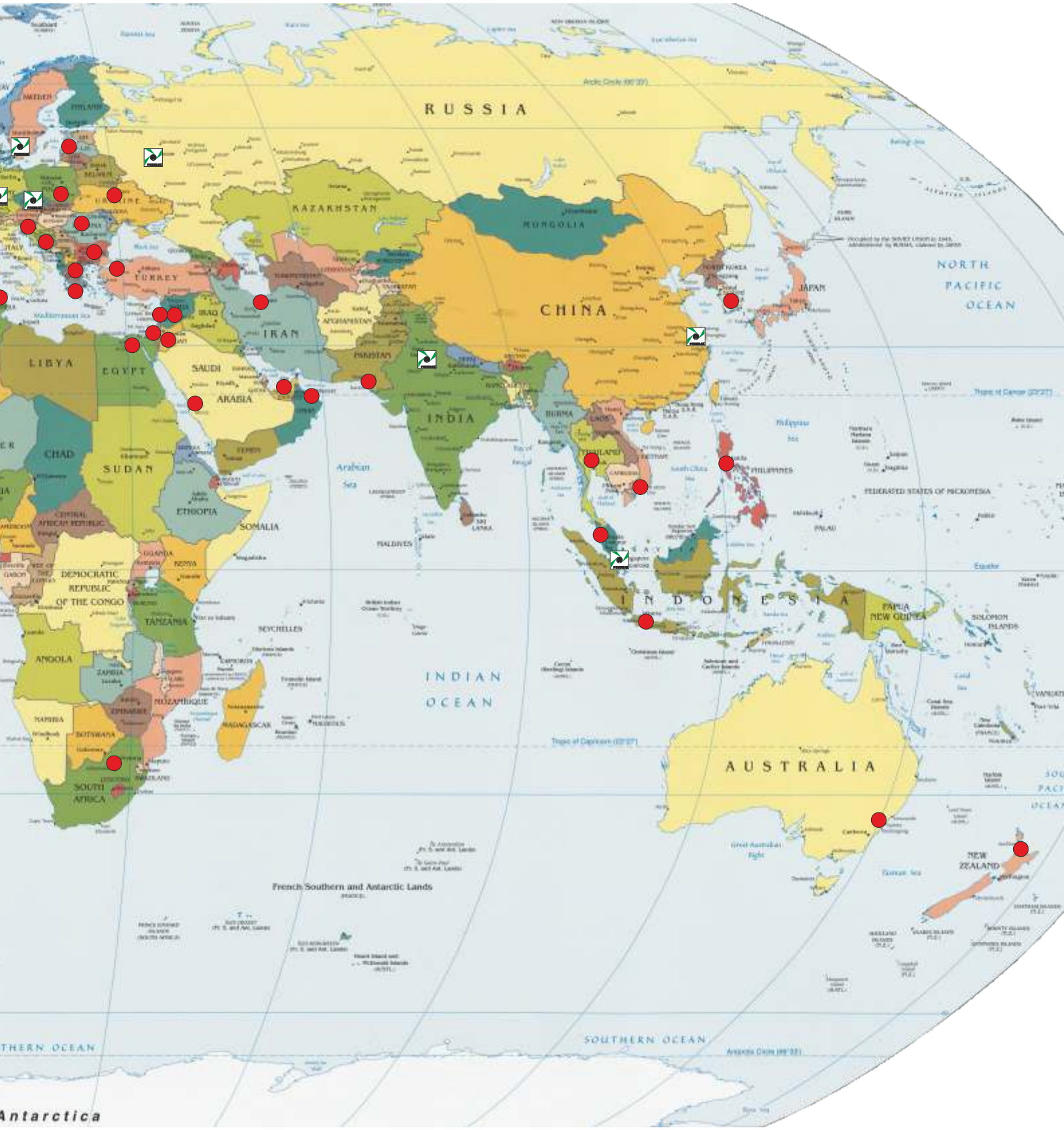
RUSSIA
KAZAKHSTAN
MONGOLIA
CHINA
NORTH PACIFIC OCEAN
JAPAN
TURKEY
IRAN
IRAQ
AFGHANISTAN
PAKISTAN
INDIA
LIBYA
EGYPT
SAUDI ARABIA
CHAD
SUDAN
ETHIOPIA
SOMALIA
Arabian Sea
MALDIVES
SRI LANKA
BURMA
THAILAND
PHILIPPINES
FEDERATED STATES OF MICRONESIA
PALAU
INDONESIA
PAPUA NEW GUINEA
SOLOMON ISLANDS
DEMOCRATIC REPUBLIC OF THE CONGO
TANZANIA
SEYCHELLES
ANGOLA
ZAMBIA
MOZAMBIQUE
ZIMBABWE
NAMIBIA
BOTSWANA
MADAGASCAR
SOUTH AFRICA
INDIAN OCEAN
AUSTRALIA
NEW ZEALAND
French Southern and Antarctic Lands
SOUTHERN OCEAN
Antarctica

sales network

PNEUMAX GREEN LINE: technology & innovation

World

EUROPA

AUSTRIA and SWITZERLAND
Pneumax G.m.b.H.

BELGIUM
Doedijns Fluidap NV/SA - Amay
Tel. 0032 0 85 51 96 96
http://www.fluidindustry.com
Doedijns Fluidap NV/SA - Puurs
Tel. 0032 0 3 570 93 83
http://www.fluidindustry.com

BULGARIA
HABERKORN EOOD
Tel. 00359 2 270561
http://www.haberkorn.bg/

CZECH REPUBLIC
Pneumax Automation s.r.o.
Opava
Tel. 0042 0553 760952-9
www.pneumaxsro.cz
pneumax@pneumaxsro.cz

ENGLAND
Pneumax Ltd.
Nursling - Southampton
Tel. 0044 02380 740412
sales@pneumax.co.uk
www.pneumax.co.uk

FRANCE
PNEUMAX FRANCE SAS
Selestat
Tel. (+33)3-88-580450
www.pneumax-france.fr

GERMANY
Pneumax G.m.b.H.
Gelnhausen
Tel. (+49)-06051-97770
www.pneumax.de

GREECE
Hydropneumatik Hellas
Tel. 0030 210 3474181
http://www.mitsis.com.gr
Theodoros Sofroniadis & Co.
Tel. 0030 231 0527243
Fax. 0030 231 515403

HOLLAND
Pneu/Tec BV
Tel. 0031 23 5699090
http://www.pneutec.nl

ICELAND
Barki Ltd.
Tel. 00354 554 6499
Fax. 00354 554 6401

LITHUANIA
DOMINGA PREKYBA
Tel. 00370 5 2322231
http://www.dominga.lt

POLAND
RECTUS POLSKA sp. z o.o.
Tel. 0048 33 857 98 00
http://www.rectus.com.pl

PORTUGAL
Portugal Pneumax Lda
Vialonga
Tel. (+351)219-737390
http://www.pneumax.pt
geral@pneumax.pt

ROMANIA
GICA Import Export Srl
Tel. 0040 257 259816
Fax. 0040 257 257259816

RUSSIA / CIS
Pneumax Ltd Moscow
Moscow
Tel. (+7)-095-7393999
http://www.pneumax.ru

SERBIA
Hidraulika d.o.o.
Tel. 00381 15 360 090
info@hidraulika.rs

SLOVENIA
Hidravlika D. O. O.
Tel. 00386 3 5453610
www.hidravlika.si

SPAIN
Pneumax S.A.
Elgoibar
Tel. (+34)-943-744174
www.pneumax.es
Pneumax Catalunia S.A.
Molins De Rei
Tel. (+34)-93-6802530
www.pneumax.es

SWEDEN / SCANDINAVIA
Pneumax Scandinavia AB
Lomma
Tel. (+46) 406174040
info@pneumax.se
http://www.pneumax.se

UKRAINE
Techtronic Ltd.
Tel. 0038 044 500 98 48
http://www.techtronic.com.ua

TURKEY
Hipel Endüstriyel Otomasyon Ltd. Sti
Tel. 0090 212 2932768
www.hipel.com.tr

OCEANIA

AUSTRALIA
Air & Automation Equipment Ltd.
Tel. 0061 2 97431271
airauto@ihug.com.au
http://www.airautomation.com.au

NUW ZELAND
Automation Equipment
Tel. 0064 7 8472082
sales@autoequip.co.nz
www.autoequip.co.nz

NORTH AMERICA

CANADA
Manufacture Scorpion Inc.
Tel. 001 450 378 3595
contact@pneumaxcanada.com
http://www.pneumaxcanada.com

U.S.A.
Rankin USA
Tel. 001 800 909-4988
Fax. 001 704 923-0594
www.rankinusa.com

SOUTH AMERICA

BRASIL
Pneumax Brasil
Tel. 0055 41 33987262
www.pneumaxbr.com.br
diretoria@pneumaxbr.com.br

CHILE
Schultz Automat. e Ing.
Tel. 0056 2 5550838
jschultz@schultzautomatizacion.cl
www.schultzautomatizacion.cl

ECUADOR
Ainsa S.A. Guayaquil City
Tel. 00593 4 3712670
Ainsa S.A Quito City
Tel. 00593 2 6014657
http://www.ainsa.com.ec
info@ainsa.com.ec

PERU'
Neumatec Perú s.a.c.
Tel. 0051 1 4442499
ventas@neumatecperu.com
http://www.neumatecperu.com

MEXICO
Pneumatecnia S.A. DE C.V.
Tel. 0052 33 36289831
pneumatecnia@yahoo.com.mx
http://www.pneumatecnia.com.mx

VENEZUELA
Sinteco Barquisimeto
Tel. 0058 251 4432555
sintecobarqto@cantv.net
http://www.sintecobqto.com.ve/

AFRICA

ALGERIA
Sarl C.M.P.R.
Tel. 00213 23 827069
Fax. 00213 23 827070

EGYPT
Technical center for machienry supply
Tel. +2 (02) 26989348
Fax. +2 (02) 26990874
tcms@fluidspower.net
http://www.tcms.fluidspower.net/

MAROC
H.P. Maroc
Tel. 00212 522 35 82 82
Fax. 00212 522 35 82 91
hpmaroc@hpmaroc.com

SOUTH AFRICA
Pneumax Southern Africa
Tel. 0027 11 573 0900
info@pneumax.co.za
www.pneumax.co.za

TUNISIA
L'Equipement moderne
Tel. 00216 71 343844
Fax. 00216 71 351845
equipement.moderne@planet.tn
http://www.lequipementmoderne.com

ASIA

CHINA
Pneumax
Pneumatic Equipments Co. Ltd
Shangha
isales@pneumaxchina.com
www.pneumaxchina.com

INDIA
Pneumax
Pneumatic India Pvt. Ltd
Noida
Tel.(+91)-120-5352560/61/62
info@pneumax-india.com
www.pneumax-india.com

INDONESIA
Pneumax Singapore Pte Ltd

PT. Mutiara Citramulia Teknindo
Tel. 0062 21 71425077
Fax. 0062 21 66693177
pneumaxmct@cbn.net.id

IRAN
ITAL ELECTRO PNEUMATIC
Tel. 0098 (21) 33919177
Fax. 0098 (21) 33119617
info@italpneum.com

ISRAEL
Ilan & Gavish
Tel. 00972 3 9221824
Fax. 00972 3 9221850
mail@ilan-gavish.com
www.ilan-gavish.co.il

JORDAN
Technical center for machienry supply
Tel. 00962 6 4746901
Fax. 00962 6 4746903
techno@fluidspower.net

LEBANON
Yammine Trading Company SARL
Tel. 00961 1 885520
info@yamminetrading.com
www.yamminetrading.com

MALAYSIA
Pneumax Singapore Pte Ltd.

PSI Pneumatic Control Sdn Bhd
Tel. 0060 4 6592627
Fax. 0060 4 6592629
sales-psi@airdynamics.com.sg

OMAN SULTANATE
Technical engineering company L.L.C
Tel. 00968 591670
Fax. 00968 591700
tecoman@omantel.net.om

PAKISTAN
Fluid technik
Tel. 0092 21 2410335
info@fuid-technik.com.pk
www.fuid-technik.com.pk

PHILIPPINES
Integrated Hydro-Pneumatic
Tel. 0063 2 8200570
integhps@iconex.net

SAUDITA ARABIA
Arabian-Universal Est. for Trading
Tel. 00966 26 477159
Fax. 00966 1 4622838

SINGAPORE
Pneumax
Pneumax Singapore Pte Ltd
Singapore
Tel. 0065 6392 0581
sales@pneumax.com.sg
www.pneumax.com.sg

SYRIA
Al Rowad Trading
Tel. 00963 11 6350530
Fax. 00963 11 6350531
ama@scs-net.org

THAILAND
Thai Agency Engineering.Co. Ltd.
Tel. 0066 2 6915900
taec@bkk.loxinfo.co.th
http://www.thai-a.com

U.A.E.
Fine Industries Eng. Serv.
Tel. 0971 6 5335434
Fax. 0971 6 5335405

VIETNAM
Pneumax Singapore Pte Ltd

certifications

PNEUMAX S.p.A.is pursuing total quality in full respect of ambience and security conditions in work ambience, for this we work in full respect of ISO9001 : 2008, ISO 14001 : 2004 and OHSAS : 18001 : 2007

SQS

Certificate

SQS herewith certifies that the company named below has a management system which meets the requirements of the standards specified below.

PNEUMAX

Pneumax S.p.A.
Via Cascina Barbellina, 10
24050 Lurano (BG)
Italy

Scope of certification

According to appendix

Field of activity

Components for pneumatic automation

Normative basis

ISO 9001:2015 Quality Management System
ISO 14001:2015 Environmental Management System
OHSAS 18001:2007 Occupational Health and Safety Management System

Partner of IQNet

IQNet

THE INTERNATIONAL CERTIFICATION NETWORK

CERTIFICATE

SQS and IQNet Partner hereby states that the organisation

Pneumax S.p.A.
Via Cascina Barbellina, 10
24050 Lurano (BG)
Italy

for the following scope and type of activities

According to appendix SQS registration number 10677

has implemented and maintains a

Management System

which fulfills the requirements of the following standards:

ISO 9001:2015 / Quality Management System
ISO 14001:2015 / Environmental Management System
OHSAS 18001:2007 / Occupational Health and Safety Management System

for the validity date, please refer to the original certificate* issued by SQS

Issue Date: 17
Issued on: 2017-02-13
Validity date: 2020-02-13
Registration Number: CH-10677

IQNet

Michael Deschuel
President of IQNet

Roland Glauser
CEO SQS

SQS

General index

PNEUMAX GREEN LINE: technology & innovation

General technical information

- Pneumatic principles
- Standards
- Measures, conversion tables
- Pneumatic symbols
- Materials
- Air treatment units
- Valves
- Cylinders
- Sizing: how to choose the correct cylinder and valve Electrotechnics and electronics

Mechanical - manual valves and accessories

Miniature valves 2/2, 3/2, 5/2, 5/3 tube ø4
(Series 104)

Miniature valves 3/2, 5/2, M5
(Series 105)

Valves 3/2, 5/2, 5/3 - G1/8" - G1"
(Series 200 - T200 - T400)

Valves 3/2 - 5/2 - G1/4" - G1/8"
(Series 800)

Accessories
Pneumatic circuit devices, M5 - G1"
(Series 600)
Complementary valves
(Series 900)
Blocking valves
(Series 50 - T50)
Function fittings
(Series 55)
Miniaturised pressure regulators
(Series 1750-1760)
Compact fittings for lubrication
(Series Mini-RAP)

Pneumatic and solenoid valves

Direct operated solenoid valves 2/2, 3/2
(Series 300)
Solenoid valves 3/2, 5/2, 5/3, G1/8" - G1/4"- G1/2" - G1"
(Series 400 - Series T400)
Valves and Solenoid valves Poppet system, for compressed air & vacuum 3/2, 5/2, 5/3, G3/8" - G1-1/2"
Pad Valves 2/2 for Air
(Series 700 - T700 - T771 - N776)
Distributors and electrodistributors 3/2, 5/2, 5/3 - M5 - G1/8", G1/8" - G1/4"
(Series 800 - 888)
Distributors and electrodistributors ISO 5599/1, 5/2 - 5/3, Size 1, 2 and 3
(Series 1000 - 1000M12)
Distributors and electrodistributors 5/2, 5/3 Size 10, 18 and 26 mm (LINE, FLAT, VDMA or BASE)
(Series 2000)
Electroditributors ISO 15407-2
(Series 2700)
Electrodistributors 5/2 - 5/3 - 2x3/2 - 2x2/2 Size 12,5
(Series Enova)
Solenoid valves 5/2 - 5/3 - 2x3/2 - 2x2/2 Size 12,5 18,8
(Series OPTYMA)

Air service units

FRL **Size 1**

FRL **Size 2**

FRL **Size 3**

FRL **Size 4**

Air service units series **Steel Line**
FRL Size 2 - 3 - 4

Electronic proportional regulators available also with CANopen protocol
Size 0 - 1 - 3
Miniaturized proportional regulators
Size 0 - 1 - 3

Pressure Booster

Pressure Booster series **P+**

Air service units series **AIRPLUS**
FRL **Size 1 - 2 - 3 - 4**

Cylinder

Microcylinders accor. to standard ISO 6432
Special performance microcylinders
Threaded end covers version
Rolled end covers version “MIR”
Rolled end covers version “MIR-INOX”
Microcylinders “TECNO-MIR”
Stainless steel AISI 316 microciylinders
Series Steel line

Cylinders according to standard
CNOMO - CETOP - ISO
(tye rods cylinders)
- series 1303 - 1308
- series 1315 (Ø250 - Ø320)
Cylinders according to standard ISO 15552
VDMA 24562 profile tube
- series 1319 - 1321
Twin rod cylinder
- series 1325 - 1326 - 1345 - 1347
Non rotating cylinder
- series 1348 - 1350
Rotary actuators
- series 1330 - 1333
Profile tube cylinders
- series 1386 - 1388,1396 - 1398 ECOPLUS
Profile tube cylinders
- series 1390 - 1392 ECOLIGHT
Stainless steel AISI 316 cylinders
- Series Steel line
Linear control units, piston rod lock
Profile tube cylinders
- series 1370 - 1373 ECOFLAT

Hydraulic speed controll check cylinders

Hydro-Pneumatic cylinders

Short stroke compact cylinders

Compact cylinders “Europe”

Compact cylinders ECOMPACT

Compact cylinders ECOMPACT-**S**

Rodless cylinders

Cable cylinders

Rodless cylinders Ø16

Manipulation

Guided compact cylinder
- series 6100
- series 6101

Twin rod slide units
- series 6200

Twin rod slide units
- series 6210

Pneumatic grippers
Version grippers, angular:
- Standard version (series 6301)
- 180 °angular (series 6302)
- 180° angular gripper rack & pinion style (series 6303)
Version Parallel style
- Standard version (series 6310)
- Wide opening (series 6311)
- 3 Finger parallel style (series 6312)

Rotary actuators
- Double rack Rotary actuators with turn table (series 6400)
- Single rack Rotary actuators (series 6411)
- Van type Rotary actuators (series 6420)

Arbitrary mount cylinders (series 6500)

Slide cylinders (series 6600)

Guide cylinders (series 6700)

Dampers (series 6900)

Sensors

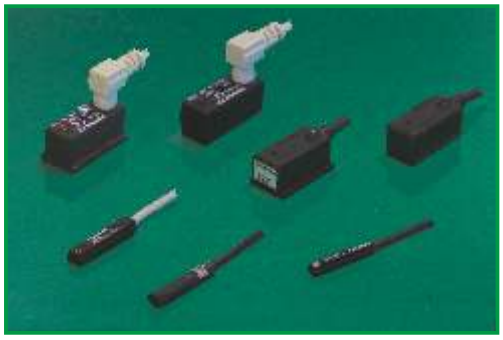

Magnetic sensors REED type with cable

Magnetic sensors REED type for connector

Magnetic sensors Hall effect with cable

Magnetic sensors Hall effect for connector

Miniaturized magnetic sensors
- rectangular profile
- oval profile
- round profile
- round section 90° cable

Technical informations

General technical information

01 - Pneumatic basic principles

- Pressure and vacuum
- Boyle - Mariotte law
- Gay - Lussac law
- Flow characteristics
- Coefficient "C" and "b"
- Coefficient Kv
- Nominal flow rate Q.Nn

PRESSURE

Pressure is defined as the ratio between force and the surface area upon which it acts $P=\frac{F}{S}$

International system measurement unit: $P=\frac{N\ (\text{Newton})}{m^2}=Pa\ (\text{Pascal})$

As a Pa is a very small unit, it is preferred to use bar: **1bar= 10^5Pa (100kPa)**

(For pressure conversion tables from bar to other units, see section 3),
Atmospheric pressure: is the pressure that the air in the atmosphere applies to the earth's surface.
At 20°C, with 65% humidity, at sea level the atmospheric pressure corresponds to 1,013 bar and varies according to height above sea level. During calculations this value is normally rounded to 1 bar regardless of height.
Relative pressure: is the value of pressure measured by instruments in pneumatic circuits.
Absolute pressure: is the sum of the atmospheric and relative pressure (normally used to calculate cylinder's air consumption)

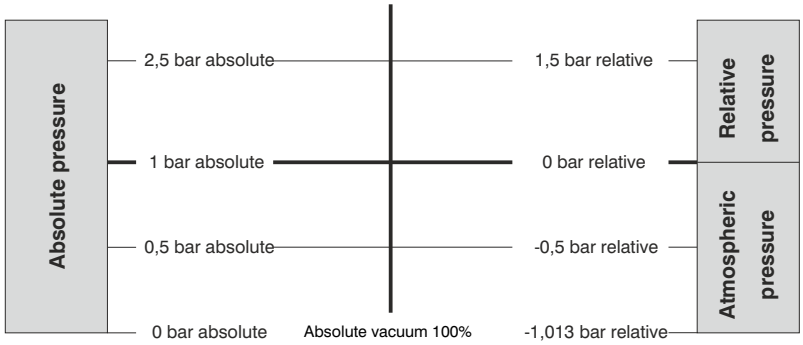

VACUUM:
Is a space with no or very little gas pressure. We talk about vacuum when the pressure is lower than the atmospheric pressure, and about absolute vacuum when absolute and atmospheric pressure are equal to zero.
Measurement unit: indicated as negative pressure calculated in: bar, Pa, Torr, mmHg, % of vacuum.
Application field: - up to 20% of vacuum for ventilation, cooling and cleaning purposes
- between 20% and 99% "Industrial vacuum" for handling, lifting and automation
- above 99% "Process vacuum" for laboratories , microchip production, molecular deposit coating…

BOYLE - MARIOTTE Law
When an elastic fluid is subject to compression, and kept at a constant temperature, the product of the pressure and volume is constant.

P1xV1 = P2xV2 = P3xV3 = etc.

GAY-LUSSAC Law
- At constant **pressure** **V1:V2=T1:T2**
the volume of a given quantity of gas
is directly proportional to the **temperature***.

- at constant **volume** **P1:P2=T1:T2**
the pressure of a given quantity of gas
is directly proportional to the **temperature***
(***** absolute temperature in Kelvin:0°C=273°K)
Based on the above, it emerges that in order **to fill a cylinder chamber** (at constant temperature) **we require as many liters as the chamber can contain, multiplied by the pressure.**

Should a variation in temperature take place during the filling process, the result obtained (V·P) would not change significantly. For example if we consider a 20 C° difference between the temperature of the air in the line and the temperature of the air in the cylinder; applying the Gay - Lussac law would result:

· Assuming a cylinder chamber volume of 100 l.
· Air line temperature 30°C at 6 bar pressure
· Air temperature in the cylinder chamber 10°C (final)

V1:V2 = T1:T2

100:V2=273+30:273+10

$V2=\frac{100x283}{303}=93,4l.$

In the same way the pressure:

P1:P2=T1:T2

6:P2=273+30:273+10

$P2=\frac{6x283}{303}=5,6\ bar$

As we can see from these results the variation is only 6.6% in both cases.

In order to calculate a cylinder air consumption in liter per minutes please refer to section 8.

Flow characteristics

Each cylinder requires, in order to generate specific forces and operate at the needed speed, specific air flow through the control valve.
It is therefore necessary to know and understand the laws that regulate the flow through a valve; and therefore the relation between pressure, pressure drop and flow rate. Only by doing so is it possible to determine whether a valve is capable of supplying the required flow rate to a cylinder at a given inlet pressure and with a reasonable pressure drop.
In order to carry out these analyses it is necessary to work with precise functional data; it is not sufficient to know the valve port size.
This data is presented in different ways depending on the different applicable ,standards and various experimental measurments methods. The figures are mainly coefficients which must be used in specific equations, with which we can estimate the valve flow rate.
In order to understand the meaning of these equations it is necessary to examine the flow inside a pneumatic valve.
For example, let us consider the following conditions: a valve supplied with an absolute pressure P1 and with a flow regulator connected downstream .

<u>Starting condition - flow regulator closed</u>
- no flow rate (Q=0)
- Upstream and downstream pressure are identical (P2=P1)

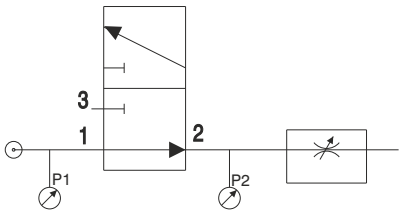

<u>Intermediate conditions - opening flow regulator</u>
By progressively opening the flow regulator the pressure P2 will decrease and the flow rate increase up to a critical point at which the flow rate becomes constant even if the flow regulator is opened further..
This critical point corresponds to the sonic condition of the flow.

<u>Final condition - flow regulator completely open</u>
- maximum flow rate (constant from critical point)
- downstream pressure P2=0

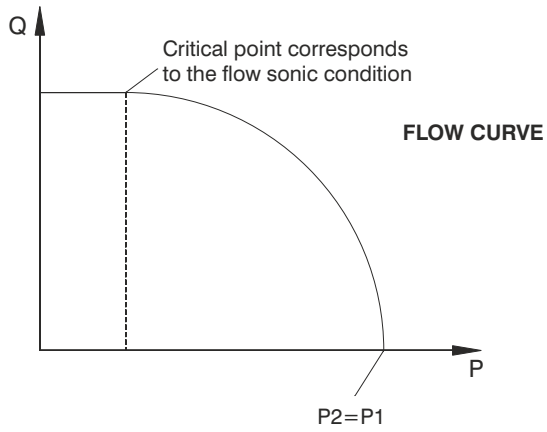

On a varying P1 the curves maintain the same form and only shift into a higher or lower flow rate area depending on whether P1 has increased or decreased. The area of interest in pneumatic valve applications is the subsonic zone, just before the critical flow point is reached. This zone is expressed in a number of different ways which average the effective flow pattern enabling simple description of the flow using experimental coefficients.

VALVE COEFFICIENTS "C" e "B"

CETOP RP50P recommendation (derived from ISO 6358 standard) expresses flow rate in function of two experimental coefficients:
- conductance **C**
- critical pressure ratio **b**.

Conductance C = Q*/P1 is the ratio between maximum flow rate Q* and absolute inlet pressure P1 under sonic flow condition at a temperature of 20°C.
Critical ratio b = P*2/P1 is the ratio between the output absolute pressure P2 and the inlet absolute pressure P1 at which the flow becomes sonic.
The expression that represents an elliptic approximation of the relationship between pressure and flow follows:

$$Q_N = C \cdot P_1 \cdot K_t \cdot \sqrt{1-\left(\frac{r-b}{1-b}\right)^2} \qquad [1]$$

Where:	QN (dm^3/s)	is the flow rate in dm^3/s at normal condition : 1,013 bar and 20°C;
	C $\left(\frac{dm^3}{s \cdot bar}\right)$	is the valve conductance
	P1 (bar)	is the inlet absolute pressure;
	r	is the ratio between downstream and upstream pressure (P2/P1);
	b	is the pressures critical ratio;
	$kt = \sqrt{293/T_1}$	is a corrective factor that consider the absolute inlet temperature T1;
	$T1 = 273 + t_1\ (°K)$	is the absolute temperature (t1 is the temperature in °C).

The experimental determination of the valve coefficient C & b is carried out with compressed air following standardised procedures and according to the scheme below.

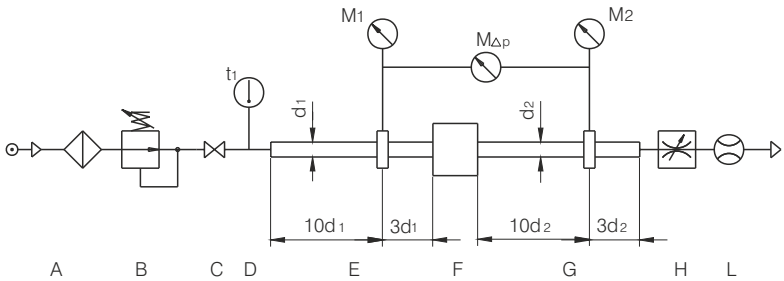

CETOP test circuit

A	Compressed air generator.
B	Pressure regulator to set upstream pressure P_1.
C	Shut off valve.
D	Temperature sensor to check upstream temperature t 1, positioned in a low velocity area.
E	Pipe where the upstream pressure is measured
F	Test valve.
G	Pipe where the downstream pressure is measured .
H	Flow regulator to adjust the downstream pressure P2.
L	Flow meter.
M1,M2	Pressure measuring equipment for upstream and downstream .
MΔP	Pressure drop measuring equipment assuming P1-P2< 1 bar.

Pipes E & G, used to measure the valve upstream and downstream pressure, must be sized according to the standard's specifications and change in size depending on the valve port sizes; the position of the connection at which the measurements are taken depends on the pipe's inner diameter.
Conductance C is determined with the following equation, measuring the critical flow rate Q* through the valve, where upstream pressure P1 is constant and greater than 3 bar.

$$C = \frac{Q^*}{P_1 \cdot K_t} \qquad [2]$$

Pressure critical ration **b** can be calculated using the following equation:

$$b = 1 - \frac{\Delta P}{P_1\left[1-\sqrt{1-\left(\frac{Q'}{Q^*}\right)^2}\right]} \qquad [3]$$

Considering a given constant pressure P1 it is necessary to proceed measuring the flow rate Q' corresponding to a pressure drop DP = P1-P2 = 1 bar.
Equation 3 is used to calculate the critical ratio as it is difficult to experimentally identify the exact pressure P*2 at which the flow becomes sonic.
The values of both the conductance C and the critical ratio b are experimentally calculated and are the average of the results obtained.
Equation [1] is used to calculate the flow in subsonic conditions P2>b·P1 when values C ; b and the valve working conditions (P1, P2, T1) are known.
Under sonic conditions , P2≤ b · P1 the equation can be simplified and the maximum flow rate can be calculated as follows:

$$Q^* = C \cdot P1 \cdot kt \qquad [4]$$

HYDRAULIC COEFFICIENT Kv

The hydraulic coefficient allows, using the equation $Q = Kv\sqrt{\frac{Dp}{\varrho}}$ (l/min) [5]
The calculation of the flow rate of a fluid through a valve
Where: Q is the fluid flow rate in l/min
Dp is the pressure drop inside the valve calculated in bar (P_1 - P1)
ϱ is the fluid density calculated in Kg/dm³
Kv is the hydraulic coefficient calculated in $\frac{l}{min}\left(\frac{kg}{dm^3 \bullet bar}\right)^{1/2}$

Using these measurement units the flow rate coefficient Kv represents the flow rate (in liters) of water across the valve with a pressure drop of 1 bar.

The measurement are carried out using the standardised circuit below on which the connection ports are positioned according to the pipe inner bore size (norm VDE/VDI 2173).

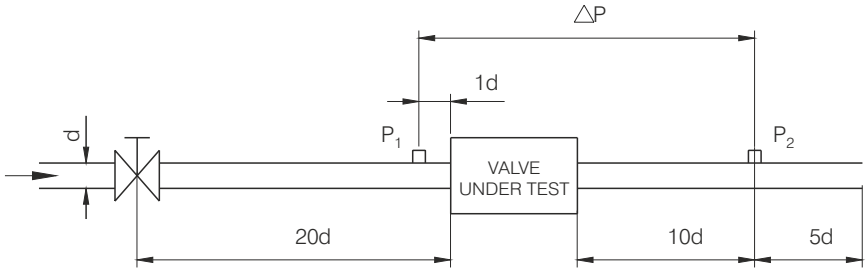

Hydraulic circuit

In some cases flow rate is measured in m³/h which correspond a Kv measured

To obtain Kv expressed in $\frac{l}{min}\left(\frac{kg}{dm^3 \bullet bar}\right)^{1/2}$ it is sufficient to multiply the Kv value expressed in $\frac{m^3}{h}\left(\frac{kg}{dm^3 \bullet bar}\right)^{1/2}$

By the coefficient 16,66.

The coefficient kv is perfectly suitable to express the flow rate of fluids but only gives approximate values in case of compressed air .

Experiences gained in hydraulic environments can be inferred in the pneumatic field, bearing in mind the difference in density, and assuming that the air flow will generate the same pressure drops and flow reductions as water
It is therefore possible to calculate reliable values for compressed air using flow coefficients Kv obtained from experiments with water.

To define the flow rate Qn through a valve at a given constant absolute inlet pressure P1, regardless of fluctuations of the downstream absolute pressure P2, refer to the equation below :

$$Q_N = 28{,}6 \bullet K_v \bullet \sqrt{P_2 \bullet \Delta P} \bullet \sqrt{\frac{T_n}{T_1}} \qquad [6]$$

where:

Qn	is the flow rate in volume l/min;
Kv	is the hydraulic coefficient $\frac{l}{min}\left(\frac{kg}{dm^3 \bullet bar}\right)^{1/2}$
Tn	is the absolute reference temperature;
T1	is the inlet absolute temperature in °K;
P2	is the downstream absolute pressure in bar;
DP	is the pressure drop P1 - P2 in bar.

Equation [6] is real up to $\Delta P = \frac{P_1}{2}$ therefore $P_2 = \frac{P_1}{2}$

For lower P_2 values the flow rate is considered to be constant, corresponding to the sonic flow rate Q*n given by the following equation:

$$Q^*_N = 14{,}3 \cdot K_v \cdot P_1 \sqrt{\frac{T_n}{T_1}} \qquad [7]$$

THE NOMINAL FLOW RATE Q_{Nn}

The nominal flow rate is the flow volume (at normal conditions) that passes through a valve with an upstream pressure P1=6bar (7 bar absolute pressure) and a pressure drop of 1 bar, corresponding to a downstream relative pressure P2 of 5bar (6 bar absolute pressure).
Normally the nominal flow rate is expressed in l/min and can be easily deduced from an experimental flow curve drawn for a upstream pressure of 6 bar (relative).
Nominal flow rate can be useful for a preliminary assesment of the performances of different valves but in reality can be used only if the working conditions are the same as those mentioned before.
In order to be able to compare valve charactersistics which are expressed in different coefficients it is possible to use conversion equations.
Given the C and b coefficient, it is possible to determine the nominal flow rate using the following equation:

$$Q_{Nn} = 420 \bullet C \sqrt{1 - \left(\frac{0{,}857 - b}{1 - b}\right)^2} \qquad [8]$$

Where : QNn = is in l/min and C in $\frac{dm^3}{s \bullet bar}$

The correlation between the hydraulic coefficient KV and the corresponding nominal flow rate is as follows:

QNn = 66 KV

where: QNn is in l/min and KV in $\frac{l}{min}\left(\frac{kg}{dm^3 \bullet bar}\right)^{1/2}$ [9]

Conversion table

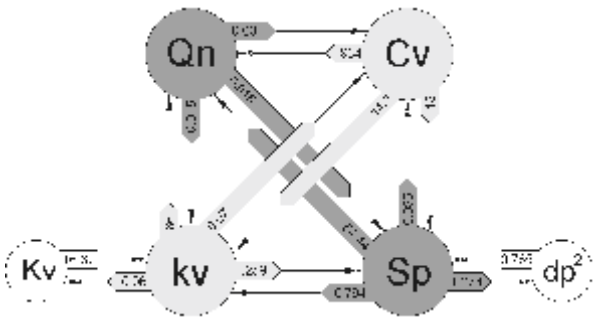

Qn	Nominal flow rate	Nl/min
kv	Hydraulic coefficient	l/min
Kv		m^3/hours
Cv		USA gallons/min
Sp	Nominal inner section area	mm^2
dp^2	Nominal diameter ²	mm^2

* to calculate the diameter dp (mm^2) square root of dp^2

02 - measures, conversion tables

- International system of units- tables
- Conversion tables
- Specific weights and melting points tables
- Thread tables
- Weight tables

INTERNATIONAL SYSTEM OF UNITS - TABLE

Size	Name	Symbol
Lenght	Meter	m
Area	square meter	m^2
Volume	cubic meter	m^3
Force	Newton	N
Mass	kilogram	Kg
Pressure	Pascal	Pa (N/m^2)
Work and Energy	Joule	J (Nm)
Power	Watt	W (J/s)
Time	Second	s
Speed	meter / second	m/s
Acceleration	meter / second^2	m/s^2
Flow rate	meter^3/second	m^3/s
Temperature	Kelvin	°K
Frequency	Hertz	Hz (1/s)
Electric current	Ampere	A
Voltage	Volt	V (W/A)
Electrical resistance	Ohm	Ω (V/A)
Electric power	Volt Ampere	VA (VA)

MEASURE AND CONVERSION UNITS

Lenght	centimetre (cm)	meter (m)	inch (In)	Foot (ft)	yard (yd)
1 meter (m)	100	1	39,37	3,281	1,094
1 inch (In)	2,54	$2,54x10^{-2}$	1	$8,33x10^{-2}$	0,028
1 foot (ft)	30,48	0,3048	12	1	0,333
1 yard (yd)	91,44	0,9144	36	3	1

Area	square centimetre (cm^2)	square meter (m^2)	square inch (sq in)	square foot (sq ft)	square yard (sq yd)
1 square centimetre (cm^2)	1	$1x10^{-4}$	0,155	$1,08x10^{-3}$	$1,2x10^{-4}$
1 square meter (m^2)	$1x10^4$	1	1.550	10,764	1,2
1 square inch (sq in)	6,452	$6,45x10^{-4}$	1	$6,95x10^{-3}$	$7,72x10^{-4}$
1 square foot (sq ft)	929	$9,29x10^{-2}$	144	1	0,111
1 square yard (sq yd)	8.361	0,8361	1.296	9	1

Volume	Litre (l = dm^3)	cubic metre (m^3)	cubic inch (cu in)	cubic foot (cu ft)	Gallon (gal - USA)	Gallon (gal -GB)
1 liter (l) = 1dm^3	1	$1x10^{-3}$	61,02	$3,53x10^{-2}$	0,2642	0,22
1 cubic meter (m^3)	1.000	1	$6,102x10^4$	35,31	264,2	220
1 cubic inch (cu in)	$1,64x10^{-2}$	$1,64x10^{-5}$	1	$5,8x10^{-4}$	$4,33x10^{-3}$	$3,6x10^{-3}$
1 cubic foot (cu ft)	28,317	$2,83x10^{-2}$	1.728	1	7,48	6,23
1 Gallon (gal -USA)	3,785	$3,79x10^{-3}$	231	0,1337	1	0,8327
1 Gallon (gal -GB)	4,546	$4,55x10^{-3}$	277,4	0,1605	1,2	1

Mass (Weight)	kilogram (Kg)	Pound (lb)	hundred-weight USA	hundred-weight GB
1 kilogram (Kg)	1	2,205	$1,102x10^{-3}$	$9,842x10^{-4}$
1 pound (lb)	0,4536	1	$5x10^{-4}$	$4,464x10^{-4}$
1 hundred-weight USA	907,2	2.000	1	0,8929
1 hundred-weight GB	1.016	2.240	1,12	1

Force	Newton (N)	Kilopound (kgp)	Poundal (pdl)
1 Newton (N)	1	0,102	7,23
1 Kilopound (kgp)	9,807	1	70,93
1 Poundal (pdl)	0,1383	0,0141	1

Pressure	Pascal (Pa)	Bar (bar)	Poundal/pollice^2 (psi)	Technical atmosphere (at = kg/cm^2)	Atmosphere (atm)	Column of Mercury (mmHg = Torr)	Column of water (mH_2O)
1 Pascal (Pa)	1	$1x10^{-5}$	$1,45x10^{-4}$	$1,02x10^{-5}$	$9,87x10^{-6}$	$7,5x10^{-3}$	$1,02x10^{-4}$
1 Bar (bar)	$1x10^5$	1	14,50	1,02	0,9869	750	10,2
1 Poundal/pollice^2 (psi)	6.895	0,069	1	$7,03x10^{-2}$	0,06805	51,72	0,703
1 Technical atmosphere (at = kg/cm^2)	$9,807x10^4$	0,9807	14,22	1	0,9678	735,6	10
1 Atmosphere (atm)	$1,013x10^5$	1,013	14,70	1,033	1	760	10,33
1 millimetre of mercury (mmHg = Torr)	133,32	$1,34x10^{-3}$	$1,934x10^{-2}$	$1,36x10^{-3}$	$1,316x10^{-3}$	1	$1,36x10^{-2}$
1 metre of water (mH_2O)	9.810	$9,81x10^{-2}$	1,423	0,1	$9,682x10^{-2}$	73,6	1

Work and Energy	Kilocalorie (kcal)	Kilogrammetre (kgm)	Kilowatt (kWh)	Horse power / hr (Hph) - non Metric	Joule (J)
1 Kilocalorie (kcal)	1	427	$1,163x10^{-3}$	$1,561x10^{-3}$	4.190
1 Kilogrammeter (kgm)	$2,34x10^{-3}$	1	$2,724x10^{-6}$	$3,653x10^{-6}$	9,806
1 kilowatt-hour (kWh)	860	367.122	1	1,341	$3,6x10^5$
1 Horsepower/hour-non metric (hph)	641	273.761	0,7457	1	$2,685x10^6$
1 Joule (J)	$2,39x10^{-4}$	0,102	$2,78x10^{-7}$	$3,725x10^{-7}$	1

Temperature	Kelvin (K)	Celsius (°C)	Fahrenheit (°F)
Kelvin (K)	/	K-273 = °C	(K-273)x1,8 = °F
Celsius (°C)	°C+273 = K	/	(°Cx1,8)+32 = °F
Fahrenheit (°F)	273+[(°F-32):1,8] = K	(°F-32):1,8 = °C	/

SPECIFIC GRAVITY AND FUSION TEMPERATURE

SOLID Substances

Substance	Chemical abbreviation	Specific gravity (Kg/dm3)	Fusion temperature (°C)
Unalloyed steel		7,8	1480
Stainless steel		7,8	1450
Tungsten steel		8,7	1450
Aluminium	Al	2,7	660
Nickel silver		8,6	1050
Antimony	Sb	6,67	630
Silver	Ag	10,5	960
Bronze	94 Cu 6 Sn	7,4- 8,9	900
Antiacid Bronze		8,78	990
Cadmium	Cd	8,64	321
Calcium	Ca	1,55	851
Cement		1,65	-
Cobalt		8,9	1490
Corundum		3,9 - 4,0	2050
Chromium	Cr	7,1	1890
Diamond	C	3,51	~ 3500
Iron	Fe	7,86	1539
Cast iron		7,25	1150 - 1250
Rubber		1,1	-
Manganese	Mn	7,3	1260
Magnesium	Mg	1,75	650
White metal		7,5 - 10,1	300 ... 400
Hard metal K10		14,7	> 2000
Hard metal P10		11,1	> 2000
Mica		2,6 - 3,6	~ 1300
Molybdenum	Mo	10,2	2600
Nichel	Ni	8,85	1450
Gold	Au	19,83	1063
Iron oxide		5,1	1565
Brass 63/37		8,5	900 - 1000
Paraffin		0,92	54
Lead	Pb	11,34	327
Synthetic plastic		1,4 - 1,5	-
Platinum		21,45	1775
Copper	Cu	8,93	1085
Emery		4	2200
Tin	Sn	7,28	232
Titanium	Ti	4,6	3380
Tungsten	W	19,3	3370
Vanadium	V	6,1	1800
Zinco	Zn	7,15	420
Die-cast zinc		6,8	390

LIQUID Substances

Substance	Chemical abbreviation	Specific gravity (Kg/dm3)	Fusion temperature (°C)
Distilled water		1	0
Ethanol		0,79	-117
Gasoline		0,68 - 0,75	-30 - -50
Pure benzol		0,88	64
Gas oil		0,88 - 1	-5
Mercury	Hg	13,59	-38,9
Lube oil		0,91	-20
Machine oil		0,91	-5
Petroleum		0,81	-70
Perchloroethylene		1,62	

GASEOUS Substances

Substance	Chemical abbreviation	Specific gravity (Kg/dm3)	Fusion temperature (°C)
Acetylene	C_2H_2	0,91	-81
Carbon dioxide	CO_2	1,53	-57
Air		1	-220
Nitrogen	N_2	0,97	-210
Illumination gas		0,47	-230
Hydrogen	H_2	0,07	-257
Neon	Ne	0,69	-249
Carbon monoxide	CO	0,97	-205
Oxygen	O_2	1,1	-218
Water vapor 100°C		0,62	0

ISO METRIC THREAD UNI 4535-64

Coarse ISO metric thread

Thread	Pitch (mm)	Ø Drilling (mm)	Ø Drill point (mm)
M 1,6	0,35	1,321	1,20
M 1,8	0,35	1,521	1,45
M 2	0,40	1,679	1,60
M 2,2	0,45	1,838	1,75
M 2,5	0,45	2,138	2,05
M 3	0,50	2,599	2,5
M 3,5	0,60	3,010	2,9
M 4	0,70	3,422	3,3
M 4,5	0,75	3,878	3,7
M 5	0,80	4,334	4,2
M 6	1	5,153	5
M 7	1	6,153	6
M 8	1,25	6,912	6,8
M 9	1,25	7,912	7,8
M 10	1,5	8,676	8,5
M 11	1,5	9,676	9,5
M 12	1,75	10,441	10,2
M 14	2	12,210	12
M 16	2	14,210	14
M 18	2,5	15,744	15,5
M 20	2,5	17,744	17,5
M 22	2,5	19,744	19,5
M 24	3	21,252	21
M 27	3	24,252	24
M 30	3,5	26,771	26,5
M 33	3,5	29,771	29,5
M 36	4	32,270	32
M 39	4	35,270	35
M 42	4,5	37,799	37,5
M 45	4,5	40,799	40,5
M 48	5	43,297	43
M 52	5	47,297	47
M 56	5,5	50,796	50,5
M 60	5,5	54,796	54,5
M 64	6	58,305	58
M 68	6	62,305	62

Fine ISO metric thread

Thread	Pitch (mm)	Ø Drilling (mm)	Ø Drill point (mm)
M 3	0,35	2,721	2,65
M 4	0,50	3,599	3,5
M 5	0,50	4,599	4,5
M 6	0,75	5,378	5,2
M 7	0,75	6,378	6,2
M 8	0,75	7,378	7,2
M 8	1	7,153	7
M 9	1	8,153	8
M10	0,75	9,378	9,2
M 10	1	9,153	9
M 10	1,25	8,912	8,8
M 11	1	10,153	10
M 12	1	11,153	11
M 12	1,25	10,912	10,8
M 12	1,5	10,676	10,5
M 14	1	13,153	13
M 14	1,25	12,912	12,8
M 14	1,5	12,676	12,5
M 15	1	14,153	14
M 15	1,5	13,676	13,5
M 16	1	15,153	15
M 16	1,5	14,676	14,5
M 18	1	17,153	17
M 18	1,5	16,676	16,5
M 18	2	16,210	16
M 20	1	19,153	19
M 20	1,5	18,676	18,5
M 20	2	18,210	18
M 22	1	21,153	21
M 22	1,5	20,676	20,5
M 21	2	20,210	20
M 24	1	23,153	23
M 24	1,5	22,676	22,5
M 24	2	22,210	22
M 24	1	24,153	24
M 25	1,5	23,676	23,5
M 26	1,5	24,676	24,5
M 27	1,5	25,676	25,5
M 27	2	25,210	25
M 28	1,5	26,676	26,5
M 30	1,5	28,676	28,5
M 30	2	28,210	28
M 32	1,5	30,676	30,5
M 33	2	31,210	31
M 35	1,5	33,676	33,5
M 36	1,5	34,676	34,5
M 36	2	34,210	34
M 36	3	33,252	33
M 38	1,5	36,676	36,5
M 39	3	36,252	36
M 40	1,5	38,676	38,5
M 42	1,5	40,676	40,5
M 45	1,5	43,676	43,5
M 50	1,5	48,676	48,5

WHITWORTH THREAD UNI 2709

«W»

Thread	Ø External (mm)	Ø Drilling (mm)	Ø Drill point (mm)
W 1/16” - 60	1,588	1,18	1,2
W 3/32” - 48	2,381	1,87	1,9
W 1/8” - 40	3,175	2,56	2,6
W 5/32” - 32	3,969	3,21	3,2
W 3/16” - 24	4,762	3,74	3,8
W 7/32” - 24	5,556	4,54	4,6
W 1/4” - 20	6,350	5,13	5,2
W 5/16” - 18	7,938	6,58	6,6
W 3/8” - 16	9,525	8,01	8,0
W 7/16” - 14	11,112	9,37	9,4
W 1/2” - 12	12,700	10,66	10,5
W 9/16” - 12	14,288	12,25	12,0
W 5/8” - 11	15,875	13,66	13,5
W 3/4” - 10	19,050	16,61	16,5
W 7/8” - 9	22,225	19,51	19,5
W 1” - 8	25,400	22,35	22,5
W 1 1/8”- 7	28,575	25,09	25,0
W 1 1/4”- 7	31,750	28,26	28,0
W 1 3/8”- 6	34,925	30,86	31,0
W 1 1/2”- 6	38,100	34,03	34,0
W 1 5/8”- 5	41,275	36,39	36,5
W 1 3/4”- 5	44,450	39,56	39,5
W 1 7/8”- 4,5	47,625	42,20	42,0
W 2” - 4,5	50,800	45,37	45,5
W 2 1/4” - 4	57,150	51,04	51,0
W 2 1/2” - 4	63,500	57,39	57,5
W 2 3/4” - 3,5	69,850	62,87	63,0
W 3”- 3	76,200	69,22	69,5

«BSF»

Thread	Ø External (mm)	Ø Drilling (mm)	Ø punta (mm)
W 3/16”- 32	4,762	4,00	4,0
W 7/32”- 28	5,556	4,69	4,7
W 1/4” - 26	6,350	5,41	5,4
W 5/16”- 22	7,938	6,83	6,8
W 3/8” - 20	9,525	8,30	8,3
W 7/16”- 18	11,113	9,76	9,8
W 1/2” - 16	12,700	11,17	11,0
W 9/16”- 16	14,288	12,76	12,5
W 5/8” - 14	15,875	14,13	14,0
W 3/4” - 12	19,050	17,01	17,0
W 7/8” - 11	22,225	20,00	20,0
W 1” - 10	25,400	22,96	23,0
W 1 1/8” - 9	28,575	25,86	26,0
W 1 1/4” - 9	31,750	29,04	29,0
W 1 3/8” - 8	34,925	31,87	32,0
W 1 1/2” - 8	38,100	35,05	35,0
W 1 5/8” - 8	41,275	38,22	38,0
W 1 3/4” - 7	44,450	40,96	41,0
W 1 7/8” - 7	47,625	44,14	44,0
W 2” - 7	50,800	47,31	47,5
W 2 1/4” - 6	57,150	53,08	53,0
W 2 1/2” - 6	63,500	59,43	59,5
W 2 3/4” - 6	69,850	65,78	66,0
W 3” - 5	76,200	71,32	71,5

GAS THREAD

«G» UNI 338-66

Thread	Ø External (mm)	Ø Drilling (mm)	Ø Drill point (mm)
G 1/8” - 28	9,73	8,68	8,70
G 1/4” - 19	13,16	11,62	11,75
G 3/8” - 19	16,66	15,12	15,25
G 1/2” - 14	20,95	18,86	19,00
G 5/8” - 14	22,91	20,82	21,00
G 3/4” - 14	26,44	24,35	24,50
G 7/8” - 14	30,20	28,11	28,25
G 1” - 11	33,25	30,59	30,50
G 1 1/8” - 11	37,90	35,24	35,50
G 1 1/4” - 11	41,91	39,25	39,50
G 1 3/8” - 11	44,32	41,66	41,50
G 1 1/2” - 11	47,80	45,14	45,00
G 1 5/8” - 11	51,32	48,67	48,50
G 1 3/4” - 11	53,75	51,08	51,00
G 2” - 11	59,61	56,95	57,00
G 2 1/4” - 11	65,71	63,05	63,00
G 2 1/2” - 11	75,18	72,52	72,50
G 2 3/4” - 11	81,53	78,87	79,00
G 3” - 11	87,88	85,22	85,50
G 3 1/4” - 11	93,98	91,32	91,50
G 3 1/2” - 11	100,33	97,67	97,50
G 3 3/4” - 11	106,68	104,02	104,00
G 4” - 11	113,03	110,37	110,50

«Gc» UNI 339-66

Thread	Ø External (mm)	Ø Drilling (mm)	Ø punta (mm)
Gc 1/8”-28	8,5	4,9	3,1
Gc 1/4”-19	11,5	7,3	4,7
Gc 3/8”-19	15,0	7,7	5,1
Gc 1/2”-14	18,5	10,0	6,4
Gc 3/4”-14	23,5	11,3	7,7
Gc 1”-11	30,0	12,7	8,1
Gc 1 1/4”-11	38,0	15,0	10,4
Gc 1 3/8”-11	41,0	15,0	10,4
Gc 1 1/2”-11	44,5	15,0	10,4
Gc 2”-11	56,0	18,2	13,6
Gc 2 1/2”-11	72,0	21,0	14,0
Gc 3”-11	85,0	24,1	17,1
		max	min

AMERICAN THREAD

Standard «NC» and «UNC»

Thread	Ø External (mm)	Ø Drilling (mm)	Ø Drill point (mm)
UNC No. 1-64	1,854	1,425	1,582
UNC No. 2-56	2,184	1,694	1,872
UNC No. 3-48	2,515	1,941	2,136
UNC No. 4-40	2,845	2,156	2,383
UNC No. 5-40	3,175	2,487	2,697
UNC No. 6-32	3,505	2,647	2,909
UNC No. 8-32	4,166	3,307	3,515
UNC No. 10-24	4,826	3,680	3,960
UNC No. 12-24	5,486	4,341	4,575
UNC 1/4"-20	6,350	4,976	5,232
UNC 5-16"-18	7,938	6,411	6,680
UNC 3/8"-16	9,525	7,805	8,087
UNC 7/16"-14	11,112	9,149	9,451
UNC 1/2"-13	12,700	10,584	10,896
UNC 9/16"-12	14,288	11,996	12,319
UNC 5/8"-11	15,875	13,376	13,709
UNC 3/4"-10	19,050	16,299	16,644
UNC 7/8"- 9	22,225	19,169	19,530
UNC 1"- 8	25,400	21,963	22,339
UNC 1 1/8"- 7	28,575	24,648	25,039
UNC 1 1/4"- 7	31,750	27,823	28,214
UNC 1 3/8"- 6	34,925	30,343	30,800
UNC 1 1/2"- 6	38,100	33,518	33,975

fine «NF» and «UNF»

Thread	Ø External (mm)	Ø Drilling (mm)		Ø Drill point (mm)
		max	min	
UNF No. 0-80	1,524	1,181	1,306	1,3
UNF No. 1-72	1,854	1,473	1,613	1,6
UNF No. 2-64	2,184	1,755	1,913	1,9
UNF No. 3-56	2,515	2,024	2,174	2,1
UNF No. 4-48	2,845	2,271	2,438	2,35
UNF No. 5-44	3,175	2,550	2,713	2,65
UNF No. 6-40	3,505	2,817	2,995	2,9
UNF No. 8-36	4,166	3,401	3,561	3,5
UNF No. 10-32	4,826	3,967	4,125	4
UNF No. 12-28	5,486	4,503	4,466	4,6
UNF 1/4"-28	6,350	5,367	5,519	5,4
UNF 5/16"-24	7,938	6,792	6,957	6,7
UNF 3/8"-24	9,525	8,379	8,545	8,4
UNF 7/16"-20	11,112	9,738	9,921	9,8
UNF 1/2"-20	12,700	11,326	11,509	11,4
UNF 9/16"-18	14,288	12,761	12,954	12,8
UNF 5/8"-18	15,875	14,348	14,542	14,4
UNF 3/4"-16	19,050	17,330	17,534	17,4
UNF 7/8"-14	22,225	20,261	20,477	20,3
UNF 1"-12	25,400	23,109	23,338	23,2
UNF 1 1/8"-12	28,570	26,284	26,513	26,4
UNF 1 1/4"-12	31,750	29,459	29,688	29,6
UNF 1 3/8"-12	34,920	32,634	32,863	32,7
UNF 1 1/2"-12	38,100	35,809	36,038	35,9

«NPS» Pipe thread

Thread	Ø External (mm)	Ø Drilling (mm)	Ø Drill point (mm)
NPS 1/8”-27	10,27	8,92	8,9
NPS 1/4”-18	13,57	11,54	11,5
NPS 3/8”-18	17,05	15,03	15,0
NPS 1/2”-14	21,22	18,61	18,5
NPS 3/4”-14	26,56	23,95	24,0
NPS 1”-11½	33,22	30,05	30,0
NPS 1¼”-11½	41,98	38,80	39,0
NPS 1½”-11½	48,05	44,87	45,0
NPS 2”-11½	60,09	56,91	57,0
NPS 2½”-8	72,70	68,13	68,0
NPS 3”-8	88,60	84,04	84,0

«NPT» Taper thread

Thread	Ø Drilling (mm)
NPS 1/8”-27	8,5
NPS 1/4”-18	11,0
NPS 3/8”-18	14,5
NPS 1/2”-14	18,0
NPS 3/4”-14	23,0
NPS 1”-11½	29,0
NPS 1¼”-11½	38,0
NPS 1½”-11½	44,0
NPS 2”-11½	56,0
NPS 2 1/2”-8	67,0
NPS 3”-8	83,0

WEIGHT in Kg per meter

STEEL (specific grafity 7,85 Kg/dm³)

Size (mm)	●	⬢	■	Size (mm)	●	⬢	■	Size (mm)	●	⬢	■	Size (mm)	●	⬢	■
2	0.024	0.027	0.031	**22**	2.98	3.29	3.80	**46**	12.93	14.40	16.60	**100**	61.62	67.98	78.50
2,5	0.038	0.042	0.049	**23**	3.26	3.57	4.12	**48**	14.20	15.67	18.09	**110**	74.60	82.26	94.99
3	0.055	0.061	0.070	**24**	3.55	3.92	4.52	**50**	15.40	17.00	19.60	**120**	88.80	97.90	113
3,5	0.075	0.083	0.096	**25**	3.85	4.21	4.91	**52**	16.70	18.51	21.22	**130**	104	114.9	132.7
4	0.098	0.109	0.126	**26**	4.17	4.60	5.26	**53**	17.30	19.10	22.05	**140**	121	133.3	153.9
4,5	0.125	0.138	0.159	**27**	4.49	4.96	5.72	**54**	17.96	19.81	22.89	**150**	139	153	176.6
5	0.154	0.170	0.196	**28**	4.83	5.29	6.10	**55**	18.70	20.60	23.70	**160**	158	174	201
6	0.222	0.245	0.283	**29**	5.14	5.67	6.54	**56**	19.30	21.31	24.62	**170**	178	196.5	226.9
7	0.302	0.333	0.385	**30**	5.55	6.12	7.06	**58**	20.70	22.87	26.41	**180**	200	220.3	254.3
8	0.395	0.435	0.502	**31**	5.87	6.46	7.54	**60**	22.20	24.47	28.30	**190**	223	245.4	283.4
9	0.499	0.551	0.636	**32**	6.31	6.96	8.04	**62**	23.69	26.13	30.17	**200**	247	271.9	314
10	0.617	0.680	0.785	**33**	6.71	7.32	8.55	**64**	25.24	27.84	32.15	**210**	272	299.8	346.2
11	0.746	0.823	0.950	**34**	7.06	7.86	9.07	**65**	26.00	28.72	33.20	**220**	298	329	379.9
12	0.888	0.979	1.130	**35**	7.55	8.33	9.62	**66**	26.84	29.61	34.19	**230**	326	359.6	415.3
13	1.04	1.140	1.33	**36**	7.99	8.81	10.20	**68**	28.50	31.43	36.30	**240**	355	391.6	452.2
14	1.21	1.33	1.54	**37**	8.37	9.30	10.75	**70**	30.20	33.30	38.50	**250**	385	424.9	490.6
15	1.39	1.52	1.77	**38**	8.90	9.81	11.34	**72**	31.84	35.24	40.69	**260**	417	459.6	430.7
16	1.58	1.73	2.01	**39**	9.38	10.34	11.94	**74**	33.74	37.23	42.98	**270**	449	495.6	572.3
17	1.78	1.96	2.27	**40**	9.86	10.88	12.60	**75**	34.70	38.20	44.20	**280**	483	533	615.4
18	2.00	2.18	2.54	**41**	10.28	11.40	13.20	**76**	35.60	39.26	45.34	**300**	554.8	611.8	706.5
19	2.23	2.45	2.83	**42**	10.91	12.00	13.85	**78**	37.50	41.36	47.75				
20	2.47	2.70	3.14	**44**	11.83	13.16	15.20	**80**	39.50	43.50	50.20				
21	2.72	3.00	3.44	**45**	12.50	13.77	15.90	**90**	49.90	55.07	63.58				

ALUMINIUM(specific grafity 2,7 Kg/dm³)

Size (mm)	●	⬢	■	Size (mm)	●	⬢	■	Size (mm)	●	⬢	■	Size (mm)	●	⬢	■
2	0.008	0.009	0.011	**22**	1.026	1.131	1.307	**46**	4.487	4.947	5.715	**100**	21.206	23.384	27.000
2,5	0.013	0.014	0.016	**23**	1.122	1.237	1.429	**48**	4.886	5.387	6.224	**110**	25.659	28.294	32.670
3	0.019	0.021	0.024	**24**	1.223	1.347	1.555	**50**	5.302	5.845	6.570	**120**	30.536	33.672	38.900
3,5	0.025	0.028	0.031	**25**	1.326	1.462	1.689	**52**	5.734	6.322	7.304	**130**	35.810	39.488	45.617
4	0.034	0.037	0.043	**26**	1.434	1.581	1.826	**53**	5.957	6.568	7.588	**140**	41.564	45.833	52.947
4,5	0.043	0.047	0.054	**27**	1.546	1.704	1.968	**54**	6.184	6.819	7.877	**150**	47.712	52.612	60.800
5	0.053	0.058	0.068	**28**	1.663	1.833	2.118	**55**	6.415	7.069	8.168	**160**	54.300	59.877	69.171
6	0.077	0.084	0.097	**29**	1.783	1.966	2.271	**56**	6.650	7.333	8.471	**170**	61.300	67.596	78.089
7	0.104	0.115	0.132	**30**	1.909	2.104	2.430	**58**	7.134	7.866	9.087	**180**	68.700	75.756	87.480
8	0.136	0.150	0.173	**31**	2.038	2.247	2.596	**60**	7.634	8.420	9.720	**190**	76.600	84.468	97.579
9	0.172	0.189	0.219	**32**	2.171	2.394	2.765	**62**	8.152	8.989	10.384	**200**	84.800	93.510	108.000
10	0.212	0.234	0.270	**33**	2.309	2.546	2.941	**64**	8.686	9.578	11.064	**210**	93.500	103.104	119.108
11	0.257	0.283	0.327	**34**	2.451	2.702	3.122	**65**	8.960	9.880	11.414	**220**	102.600	113.138	130.700
12	0.306	0.337	0.389	**35**	2.598	2.864	3.308	**66**	9.237	10.185	11.766	**230**	112.200	123.724	142.929
13	0.358	0.395	0.456	**36**	2.748	3.029	3.500	**68**	9.806	10.813	12.491	**240**	122.150	134.696	155.605
14	0.416	0.458	0.529	**37**	2.903	3.201	3.698	**70**	10.391	11.458	13.230	**250**	132.600	146.220	168.917
15	0.477	0.526	0.608	**38**	3.062	3.376	3.900	**72**	10.933	12.056	13.927	**260**	143.350	158.074	182.611
16	0.543	0.599	0.691	**39**	3.226	3.557	4.109	**74**	11.612	12.804	14.792	**270**	154.600	170.480	196.942
17	0.613	0.675	0.780	**40**	3.393	3.736	4.320	**75**	11.928	13.153	15.194	**280**	166.250	183.326	211.783
18	0.687	0.757	0.865	**41**	3.565	3.930	4.541	**76**	12.249	13.507	15.603	**300**	190.900	210.508	243.184
19	0.766	0.844	0.975	**42**	3.741	4.125	4.765	**78**	12.902	14.227	16.435				
20	0.848	0.935	1.080	**44**	4.105	4.526	5.229	**80**	13.572	14.966	17.280				
21	0.935	1.031	1.191	**45**	4.294	4.735	5.468	**90**	17.177	18.941	21.870				

BRASS (specific grafity 8,5 Kg/dm³)

Size (mm)	●	⬢	■	Size (mm)	●	⬢	■	Size (mm)	●	⬢	■	Size (mm)	●	⬢	■
2	0.026	0.028	0.034	**22**	3.231	3.564	4.114	**46**	14.126	15.585	17.988	**100**	66.759	73.658	85.011
2,5	0.041	0.045	0.052	**23**	3.532	3.897	4.497	**48**	15.385	16.974	19.591	**110**	80.829	88.587	102.928
3	0.060	0.066	0.076	**24**	3.845	4.242	4.896	**50**	16.690	18.414	21.253	**120**	96.135	106.070	122.419
3,5	0.081	0.089	0.103	**25**	4.173	4.604	5.313	**52**	18.051	19.916	22.986	**130**	112.820	124.479	143.665
4	0.106	0.116	0.134	**26**	4.513	4.979	5.746	**53**	18.752	20.689	23.878	**140**	130.849	144.371	166.165
4,5	0.135	0.148	0.159	**27**	4.867	5.369	6.197	**54**	19.466	21.455	24.788	**150**	150.203	165.725	191.269
5	0.167	0.184	0.212	**28**	5.234	5.774	6.665	**55**	20.196	22.283	25.717	**160**	170.901	188.562	217.626
6	0.240	0.264	0.305	**29**	5.614	6.194	7.148	**56**	20.935	23.098	26.658	**170**	192.933	212.871	245.682
7	0.327	0.360	0.416	**30**	6.009	6.629	7.651	**58**	22.457	24.777	28.596	**180**	216.299	238.652	275.436
8	0.428	0.472	0.545	**31**	6.416	7.079	8.170	**60**	24.033	26.516	30.603	**190**	241.000	265.906	306.891
9	0.542	0.598	0.690	**32**	6.835	7.541	8.703	**62**	25.662	28.314	32.627	**200**	237.036	294.632	340.045
10	0.667	0.735	0.849	**33**	7.270	8.021	9.257	**64**	27.344	30.169	34.820	**210**	294.406	324.831	374.899
11	0.809	0.892	1.030	**34**	7.717	8.514	9.826	**65**	28.205	31.119	35.916	**220**	323.110	356.501	411.450
12	0.963	1.062	1.226	**35**	8.178	9.023	10.413	**66**	29.080	32.085	37.030	**230**	353.464	389.992	450.103
13	1.128	1.244	1.436	**36**	8.652	9.546	11.017	**68**	30.869	34.059	39.308	**240**	384.561	424.270	489.664
14	1.308	1.443	1.665	**37**	9.139	10.083	11.637	**70**	32.716	36.097	41.660	**250**	417.239	460.358	531.315
15	1.502	1.657	1.912	**38**	9.639	10.635	12.274	**72**	34.607	38.183	44.068	**260**	451.290	497.928	574.676
16	1.709	1.885	2.176	**39**	10.154	11.203	12.930	**74**	36.556	40.333	46.550	**270**	486.676	536.971	619.737
17	1.929	2.128	2.456	**40**	10.684	11.788	13.605	**75**	37.553	41.433	47.820	**280**	523.387	577.476	665.992
18	2.163	2.386	2.754	**41**	11.222	12.381	14.290	**76**	38.560	42.544	49.102	**300**	600.831	662.923	765.103
19	2.410	2.659	3.068	**42**	11.776	12.992	14.995	**78**	40.616	44.813	51.708				
20	2.670	2.946	3.400	**44**	12.924	14.259	16.457	**80**	42.725	47.140	54.406				
21	2.944	3.248	3.748	**45**	13.518	14.915	17.213	**90**	54.074	59.662	68.858				

03 - Pneumatic symbols

- FRL
- Valves and Solenoid valves,
- Auxiliary valves,
- Connectors and pipe
- Cylinders

AIR SERVICE UNITS

Air treatment mechanisms	Other mechanisms
Pneumatic accumulator (capacity)	Pressure gauge
Automatic drain air	Shut-off valve
Automatic drain air	
Lubricator	Progressive start-up valve With Electric control
Air filter	
Filter - with manual drain	
Filter - with automatic drain	
Pressure control valves	Progressive start-up valve With Pneumatic control
Pressure switch	
Free discharge pressure relief valve	
Free discharge pilot-operated pressure relief valve	
Sequence valve	
Pressure regulator	
Pressure regulator without exhaust valve	
Pilot-operated pressure regulator without exhaust valve	
Pressure regulator without exhaust valve (free)	
Differential pressure regulator	
Assembled units	
Filter pressure regulator	
Filter pres. reg. + lubricator Filter + pres. reg. + lubricator	

VALVES AND SOLENOID VALVES

- **Terms and descriptions** -

The connections to the inlet and out lets of the valves can be of two types:

- **main connections**:
- supply connection identified with number 1
- consumption connection identified with number 2 and 4
- exhaust connection identified with number 3 and 5
- **Pilot connections**:
- repositioning connection on 2/2 & 3/2 ways valves identified with number 10
- switching connection on 2/2 & 3/2 ways valves and repositioning connection on 5/2 & 5/3 ways valves identified with number 12
- switching connection on 5/2 & 5/3 ways valve identified with number 14

Switching : is the process that changes the state of a valve from rest position to actuated position and is achieved by means of a mechanical, pneumatic or electric signal

Repositioning: is the process that changes the valve state from actuated back to rest position and is achieved by means of an external mechanical (spring), pneumatic (differential) or electric signal

Ways: indicated the number of connections on the valve body and on the pneumatic diagram

Positions: indicates the number of positions achieved by the valve and corresponds to the number of squares on the pneumatic simple.

Function: indicates the valve working diagram at rest condition and corresponds to the right square in the pneumatic scheme.

Valves symbols

Way	Pos.	Function	Symbol
2	2	Normally closed	
2	2	Normally open	
3	2	Normally closed	
3	2	Normally open	
5	2	Separated exhaust connections	
5	3	Closed centres	
5	3	Open centres	
5	3	Pressured centres	

Switching and Repositioning

Mechanical	Pneumatics
Plunger	Pneumatic
Sensitive plunger	Pneumatic -return to center
Roller	Pneumatic - depressurised
Unidirectional roller	Differential (pneumatic spring)
Sensitive roller	Differential external pilot
Pedal	Sensitive differential
Pedal - spring return	**Electrical**
Push Button	Solenoid
Sensitive push button	Bistable solenoid
Push button - two positions-.	Solenoid (internal pilot)
Lever	Solenoid (external pilot)
Lever - spring to center	Solenoid - spring to center
Sensitive lever	Solenoid with suppl. pilot
Two position mechanical stop	
Three position mechanical stop	
Spring	

Complementary valves

Throttle valve	Silencer
Bidirectional flow regulator	Non-return valve without spring
Unidirectional flow regulator	Non-return valve with spring
Quick exhaust valve	Non-return valve controlled during closing
Shuttle valve	Non-return valve controlled during opening

Piping and connections

Pressure line	One-way rotating intake
Control line	Three-way rotating intake
Exhaust line	Closed air intake
Flexible line	Air intake with connection
Electric line	Quick coupling connection without non-return valve
Piping connections	Quick coupling connection with non-return valve
Piping intersection	Air exhaust unthreaded connection
Main air connection	Air exhaust threaded connection

CYLINDERS

Single acting cylinders

with external return	
with spring return	

Double acting cylinders

Standard rod	
Double rod (push/pull version)	
With non adjustable cushioning	
With adjustable cushioning	
With magnetic piston	
With magnetic piston with adjustable cushioning	

Tandem cylinders

In tandem, common rod	
In tandem, independant rods	
In tandem, opposite rods	
Opposed, common rod	

Non rotating cylinders

Standard rod / double acting	
Twin rod / double acting	
Twin rod / double acting push/pull rod	
Push/pull twin rod double acting	
Guided compact cylinders	

Cylinders for piston rod lock

With magnetic piston with adjustable cushioning	
With non magnetic piston with adjustable cushioning	

Rodless cylinders

With magnetic piston With adjustable cushioning	
Cable cylinders with magnetic piston	
Cable cylinders with non magnetic piston	

Telescopic cylinders

Single acting	
Double acting	

Various cylinders

Rotating cylinders	
Rotating cylinder	
Bellows cylinder	

Pressure boosters

Air-Air intensifier	
Air-oil intensifier	
Hydropneumatic accumulator	

04 - Materials - technical features

- Elastomer and plastic materials table

ELASTOMER AND PLASTIC MATERIALS

CODE (According to ISO 1629)	Working temperature	Chemical description
ELASTOMERS		
EPDM	-40°C ÷ +100°C	ethylene propylene diene monomer
FFPM - FFKM	-5°C ÷ +200°C	Elastomero perfluorurato
FPM - FKM	-5°C ÷ +150°C	Fluoro rubber
HNBR	-5°C ÷ +120°C	Hydrogenated acrylonitrille butadiene
NBR	-5°C ÷ +70°C	Nitrile rubber
PUR	-30°C ÷ +80°C	Polyurethan
EU	-30°C ÷ +80°C	Injection molding polyurethan
PLASTIC MATERIALS		
PTFE	-150°C ÷ +200°C	Polytetrafluoroethylene
POM	-40°C ÷ +110°C	Acetalic resin
PA	-40°C ÷ +120°C	Polyamide (Nylon)
PC	-100°C ÷ +130°C	Polycarbonate
PBT	-40°C ÷ +130°C	Polybutylene terephthalate

05 - FRL units

- General information
- FRL units
- Flow rate curves

Once air is compressed it is necessary to process it in order to improve its quality. The air quality is measured in classes according to ISO 8573-1 standard, where the three types of contaminants that could effect pneumatic equipment life:

- quantity of water particles dissolved in the air
- quantity of oil particles dissolved in the air
- quantity of solid particles in the air

	WATER QUANTITY	OIL QUANTITY
CLASS	Maximum dew point under pressure (C°)	Maximum oil concentration (mg/m³)
1	-70	0,01
2	-40	0,1
3	-20	1
4	+3	5
5	+7	>5
6	+10	/
7	/	/

	QUANTITY OF SOLID PARTICLES				
	Particle size (d) [μm]				
	≤ 0,10	0,10 < d ≤ 0,5	0,5 < d ≤ 1,0	1,0 < d ≤ 5,0	5,0 < d ≤ 50
CLASS	Maximum number of particles for m³				
1	Not specified	100	1	0	0
2	Not specified	100 000	1 000	10	1
3	Not specified	Not specified	10 000	500	10
4	Not specified	Not specified	Not specified	1 000	100
5	Not specified	Not specified	Not specified	20 000	1 000
6	Not specified	Not specified	Not specified	Not specified	20 000

The correct functioning of a pneumatic plant is also maintained through the use of FRL units, comprising a filter, a pressure regulator and a lubricator positioned before the pneumatic equipment.

FILTER

This component is used to eliminate vapour particles, dust, solid particles, corrosive gasses, oil vapours etc from the air.

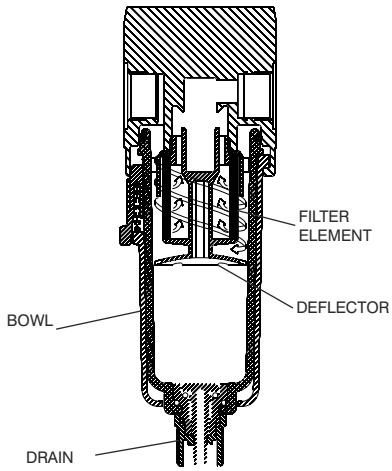

In the bottom of the bowl there is a device which is used to drain the particles which have been extracted from the air. This device can be automatic or manually operated, in case of the manual version it is important to ensure that the condensate level does not reach the deflector as it would be sucked back into the air line.

Subsequently the dried air goes through a filter element which blocks further particles; the element is made of a porous material which, depending on the size of the particles it blocks, can be classified as a 5μm - 20μm - 50μm element.

Another type of filter is based on a double filtering action system (**called** a **two stage system**) and is capable of removing up to 99.7% of the organic and inorganic solid particles from the air and facilitates the agglomeration of liquid particles into drops that subsequently fall to the bottom of the bowl. Such units are called coalescing filters.

PRESSURE REGULATOR

Enables the regulation, reduction and stabilization of the air pressure in the pneumatic circuit; adapting it to the requirements of the equipment to be supplied.

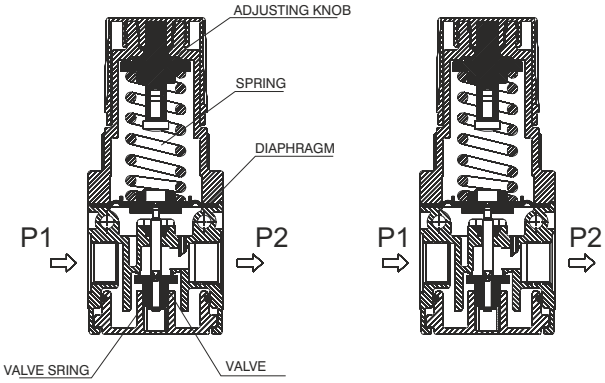

Compressed air pressure, both in reservoir and pipe lines, is continuously subjected to variation and fluctuation caused by inconsistencies in consumption and by irregular operation of compressors. Therefore, it is always necessary to regulate the air pressure in order to reduce it to the required values and to level it to a more constant supply.

Screwing and unscrewing the adjusting knob generates an increase or reduction of the regulated pressure.

RELIEVING: pressure regulators normally incorporates what is called the RELIEVING function, a system that exhausts any over pressure (pressure above the regulated pressure) that might build up (for example under the force generated by an external actuator) in the down stream part of the circuit. All regulators are fitted with a threaded connection for a pressure gauge to indicate the regulated pressure level. Pneumax Spa's product range also includes a pressure regulator which integrates the gauge directly in the regulating knob, thus reducing envelope size and assembly costs whencompared to a traditional regulator & gauge assembly. Furthermore Pneumax has designed a dedicated bayonet coupling system which enables the assembly of a series of regulators (both traditional and with integrated gauge) which can thereby be supplied with a single air supply.

LUBRICATOR

Under normal working conditions Pneumax equipment does not require additional lubrication. Only in specific conditions, and in cases where the prelubrication applied to the sliding components during production is removed , is it necessary to use additional lubrication. The air that passess through the lubricator automatically draws nebulised oil , via a venturi, which subsequently deposist on the pneumatic equipment internals.

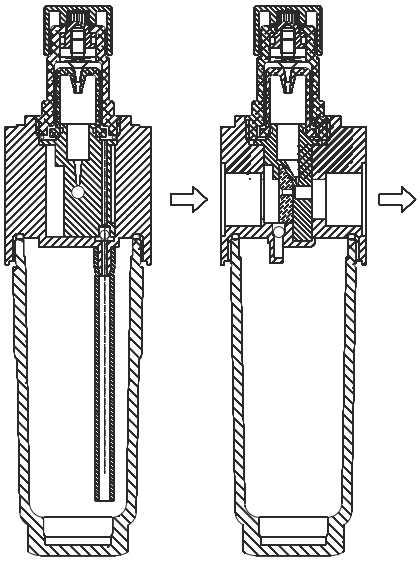

The lubricator is ideally mounted as close as possible to the components which require lubrication in order to prevent oil deposits in the air lines.

FRL GROUPS

The FRL group includes the three items described earlier assembled in sequence; Filter, regulator, lubricator.

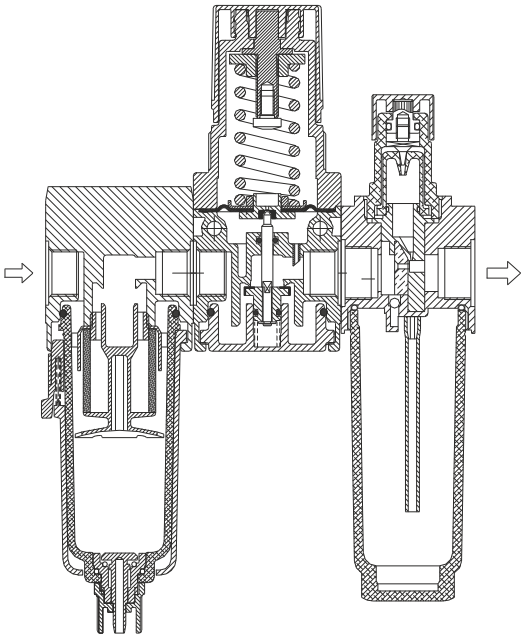

SHUT OFF VALVE

A 3/2 way N/C poppet valve, normally manually operated, which is used to allow or block air flow into the FRL group (always fitted before an FRL group).
A lockable version , to be used with a pad lock, is available in order to prevent accidental operation.

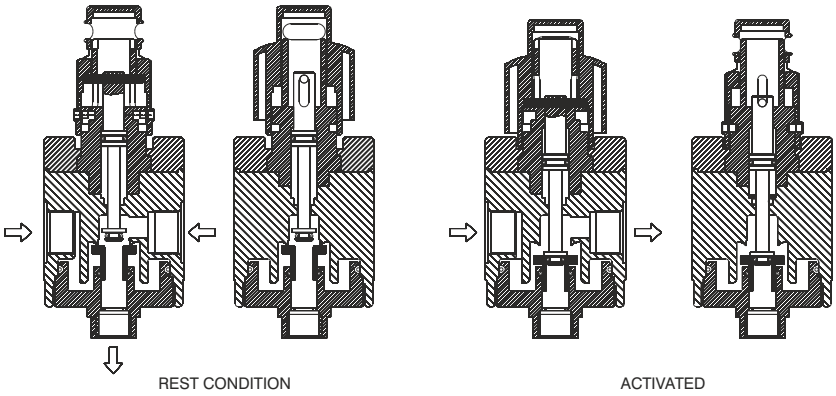

SOFT START VALVE

When compressed air is supplied to a circuit there is a short period of time during which the pressure level in the different components connected to the circuit is uneven and needs to be stabilised. This difference in pressure can generate sudden and unforeseen cylinder movements which can be dangerous or damage the machine.
In order to prevent this occurring it is necessary to progressively supply the air into the circuit, at least until a pressure of 3bar has been reached. Above this value it is possible to rapidly increase the pressure.
The soft start valve, which can be pneumatically or electrically operated, fitted at the end of the FRL group accomplishes this task.

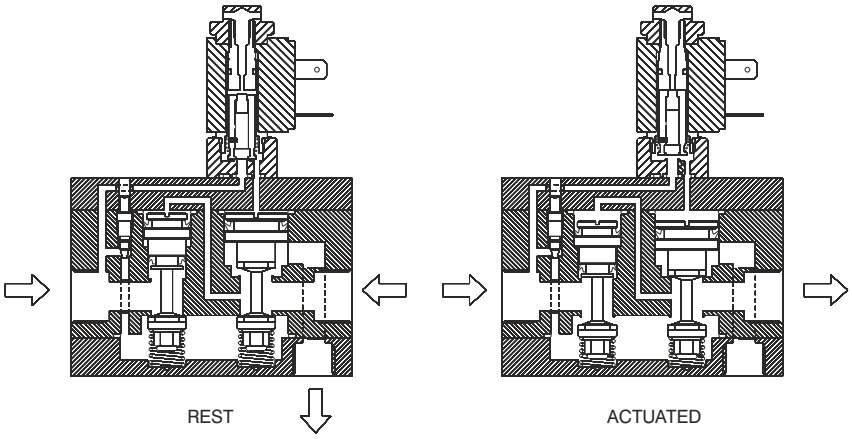

FILTER-REGULATOR

This units integrates, in one single component the functions of a filter and a pressure regulator.

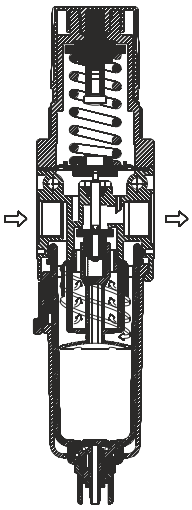

The technical features of this unit combine the features of the two individual components.

As shown below the lower part of the unit resembles a conventional filter and offers the same filtration performance as an equivalent stand alone unit. The air then enters the pressure regulator at the top of the unit,wherethe pressure is regulated and sent downstream. This units are dimensionally and economically more convenient.

PRESSURE BOOSTER

The pressure booster is designed to continuously pump air into the downstream part of the circuit until the pressure reaches a value which doubles the inlet pressure. When this value is reached the unit is balanced and stops pumping.

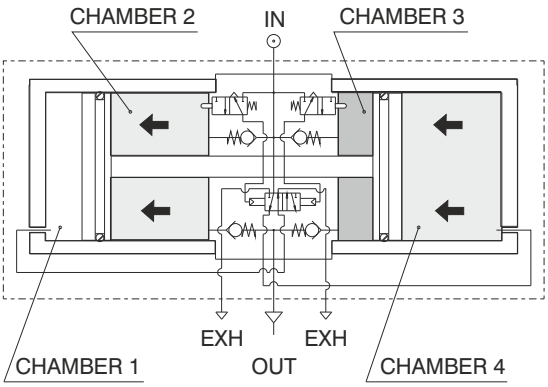

When the downstream pressure drops the booster re-starts, and operates until the balance condition is reacheived.

Pressure boosters can also be fitted with a pressure regulator fitted directly to the inlet connection in order to better regulate the output pressure.

It is important to remember that the pressure booster reaches the 1:2 ratio only when the air consumption is zero, which means that it is possible to put under pressurize a reservoir.

When there is air consumption the boost ratio varies depending on the flow rate and pressures required.

Pressure boosters are normally used on application where it is necessary increase the force from a cylinder that can not be replaced with a larger bore. It is therefore necessary to supply the actuator with a higher pressure than the standard line pressure in order to generate a greater force.

This solution allows the use of a single line pressure to the whole machine, increasing it only where necessary.

The pressure booster compression ratio is 1:2

06 - Valves and solenoid valves

06

- Basic principles, working diagram
- Flow rate curves

GENERAL INFORMATION

In pneumatic applications the valve is the component that manages the compressed air, diverting and regulating the flow.
It is possible to distinguish three main categories:
- **logic elements**: block or redirect the compressed air flow depending on requirements (e.g. logic elements such as OR & AND)
- **regulation valves**: adjust the compressed air flow or pressure **depending on** requirements (e.g. flow regulators)
- **distribution valves :** redirect the compressed air flow without affecting flow rate or pressure.

Distribution valves are made by two main parts: a functional part that physically diverts the air flow (the main **body**),and a control part (the **operator**) that actuates the main valve and interfaces between the operator and the powersource (such as an actuator).

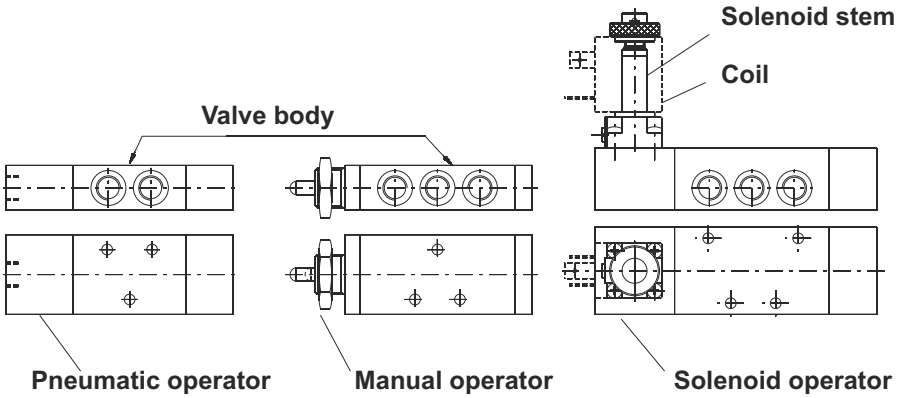

VALVE BODY

This is the functional part of the valve and includes the air connections, the mounting holes, and the moving parts needed to divert the air flow.
Two main constructive systems are available: poppet system and spool system.

Poppet system

This principle is based on two rubber poppets which move inside the valve main body and directly seal on the inner bore section .

Advantages

- the moving parts only travel short distances: fast response times
- Limited pressure drop
- large air passage sections: high flow rate

Disadvantages

- only available in monostable configuration: the control signal must stay on during operation: repositioning can only be achieved via a spring
- unbalanced system; pressure acts directly on the poppet and therefore requires strong springs to counteract it, as a consequence minimum working pressure is high.
- 5/3 function not available

Spool system

This principle is based on the spool which moves inside the seals which are fixed in the valve body. The spool is profiled so that during the movemet it opens and closes air passages.

Advantages

- easy to assemble and maintain
- 5/3 functions available
- compact dimensions
-Possibility of using different type of operators on the same valve body
-Possibility of assembly on manifolds

Disadvantages

- moving parts have to travel longer distances: longer response times
- smaller air passages / lower flow rate

Various valve functions are available depending on the valve type. Listed below are some examples of the spool system.

2/2 - 2 ways 2 positions 2 threaded connections (supply and consumption no exhaust)

Normally closed (NC)

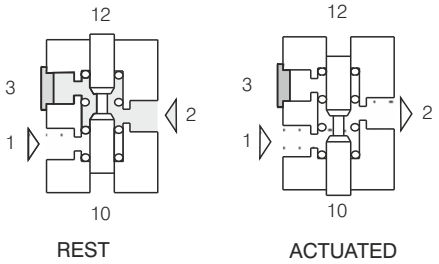

Normally open (NO)

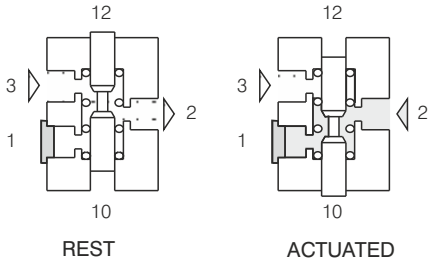

3/2 - 3 ways 2 positions 3 threaded connections (supply, outlet and exhaust)

Normally closed (NC)

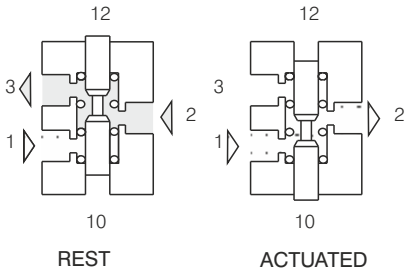

Normally open (NO)

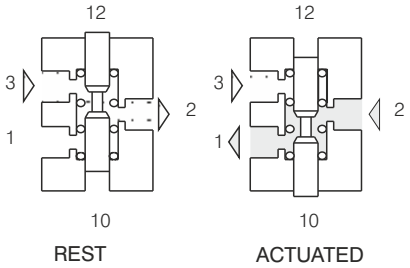

5/2 - 5 Ways 2 positions 5 threaded connections (supply , outlets, and exhausts)

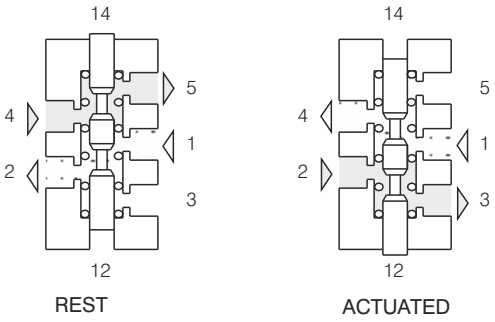

5/3 - 5 ways 3 positions

5 threaded connections (supply, outlets and exhausts)

Closed centers (CC)
(rest condition: all ports closed)

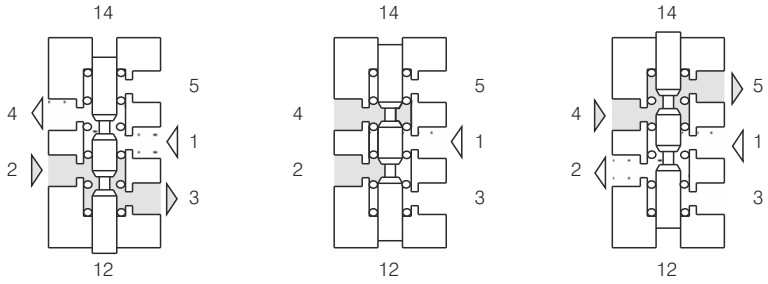

operated by 14 | rest | operated by 12

Open centers (CA)
(rest conditions: port 1 closed, port 4 connected to port 5 and port 2 connected to port 3)

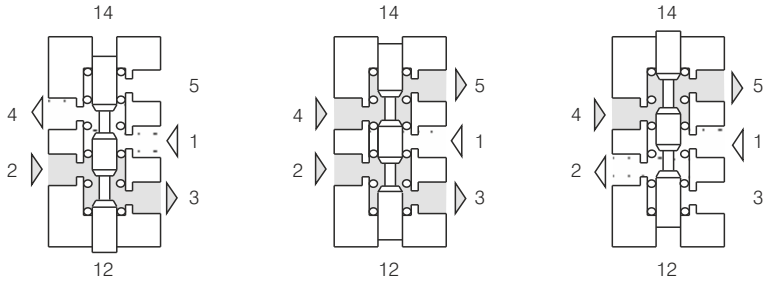

Operated by 14 | rest | operated by 12

Pressurised centers (CP)
(rest conditions: port one connected to 2 and 4 ,connections 5 and 3 closed)

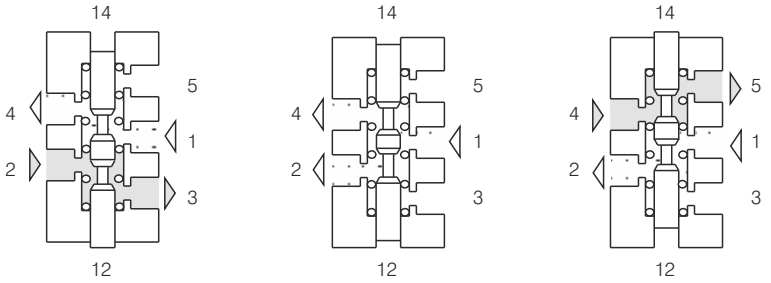

operated by 14 | rest | operated by 12

OPERATORS

The part dedicated to the control of the valve and can be used to actuate (switch) the valve or to reposition it (return the valve into the rest position) .
If the operator is manually or mechanically piloted we are talking about a valve , if it is electrically piloted we are talking about a solenoid valve.

Manual/mechanical operators
Include lever, rollers, buttons, pedals etc.... And act directly on the valve internal air distribution system (spool).

Pneumatic operators
Normally used when it is not possible to directly operate the valve; it comprises a piston which, upon receipt of an air signal, operates the valve internal air distribution system (spool) .

Electropneumatic operators
These operators transform an elettrical signal into a pneumatic signal.

MONOSTABLE AND BISTABLE VALVES

Depending on the number of signals needed to operate them, valves can classed as monostable or bistable

Monostable valves and solenoid valves: only require one external signal to operate.
On these valves the repositioning operator is unstable and does not require an external signal to switch; reset is automatic as soon as the opposiing signal is removed.

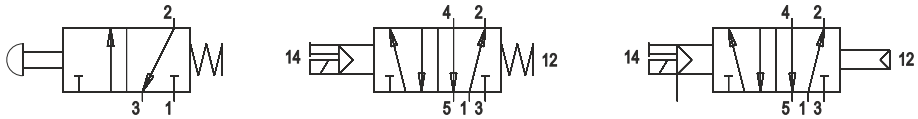

The most common unstable operators are mechanical (spring) or pneumatic (differential). The first is simply a spring that moves the spool longitudinally. The second is based on a piston which has a smaller diameter than the opposite pneumatic operator and therefore generates a smaller force. From the pneumatic symbols shown below when the signal 12 is not present the valve switches back to the rest position.

Bistable valves and solenoid valves: require two external signals in order to operate. These are valves with stable operators, such as pneumatic or 2 position buttons, which remain in position until the opposite signal is received.

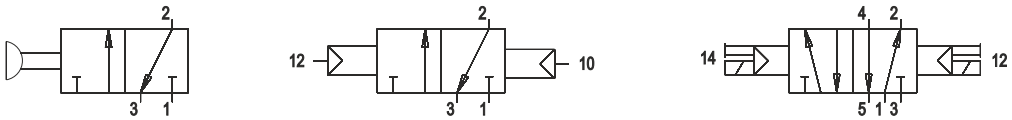

SOLENOID VALVES

Directly operated solenoid valves: these valves directly control the compressed air flow from inlet to the outlet port and can also be defined as poppet valves. The construction is based on a hollow stem, normally made of brass or stainless steel, which is fitted at one end with a fixed plunger. Inside the stem there is a moving plunger which also carries the poppets, which is moved the magnetic field generated by the solenoid which fits onto the stem's outer diameter. The fixed plunger is normally made of a low magnetically retentive steel which acts as a magnetic field intensifier; on application with AC current the plunger if fitted with a copper ring called displacement ring , which helps to reduce vibrations generated by this type of current.
These solenoid valves are normally equipped whit an additional manual override which can be used to activate the valve at any time (for example during maintenance or inspection) and can only be 2/2 or 3/2 (normally open or normally closed)

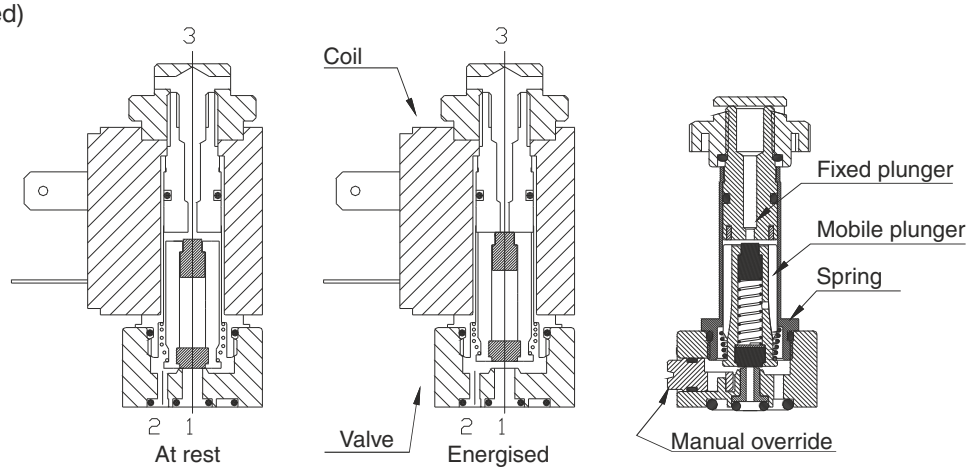

Indirectly operated valves: these valves are fitted with adirectly operated valve which upon receipt of an electric signal, actuates a pneumatic operator.
it is possible to distinguish two main categories:
- **servo assisted** (internal feeding): the operator receives the air supply directly from the valve supply port "1" ; when the solenoid is activated the air passes from the valve port "1" into the pneumatic operator that actuates the valve. The valve supply pressure is the same as the operator pressure.
- **externally supplied**: basic working principle common to the servo assisted version but with the operator externally fed.
The valve and operator working pressure can be different.

TERMS

Minimum switching pressure: indicates the minimum pressure needed to switch the valve, below that value the valve does not operate.
Minimum switching force: for mechanically operated indicates the minimum mechanical or manual force needed to switch the valve.
Minimum working pressure: is the maximum pressure value at which the pneumatic devise can operate in safe conditions.
Nominal orifice size: correspond the connection minimum passage size.
Minimum and maximum temperature: indicates the temperature range within which the component can operate safely

07 - Cylinders

- Basic information
- Cylinder operation diagram
- Air consumption
- Axial load
- End of stroke damping properties
- Pull/Push force
- Single acting cylinders spring forces
- End cap screws - maximum torque

Base principles

- Function

Cylinders are , together with some other items , the components of an automatic system that transform the pneumatic energy in labour

L = F x s
(Labour=Force x movement)

The theoretical force of a cylinder is directly proportional to the supply pressure and the surface upon which it acts (piston surface).

F = P x S
(Force=Pression x Superface)

(On the inwards stroke the area on which the pressure acts is reduced by the area of the piston rod)

The true force fo the cylinder has to be calculated, bearing in mind :
- the friction of the seals during operation.
- the cylinder has to overcome the static friction generated by the seals before it can actually start moving. When a piston does not move for some time, the compression between the seals and barrel forces away the pre lubricating grease. When the cylinder is then operated it will therefore encounter a dry spot which will further increase breakaway friction.
.
Therefore, the real force is roughly 10 -15% lower than the theoretical force

Construction design

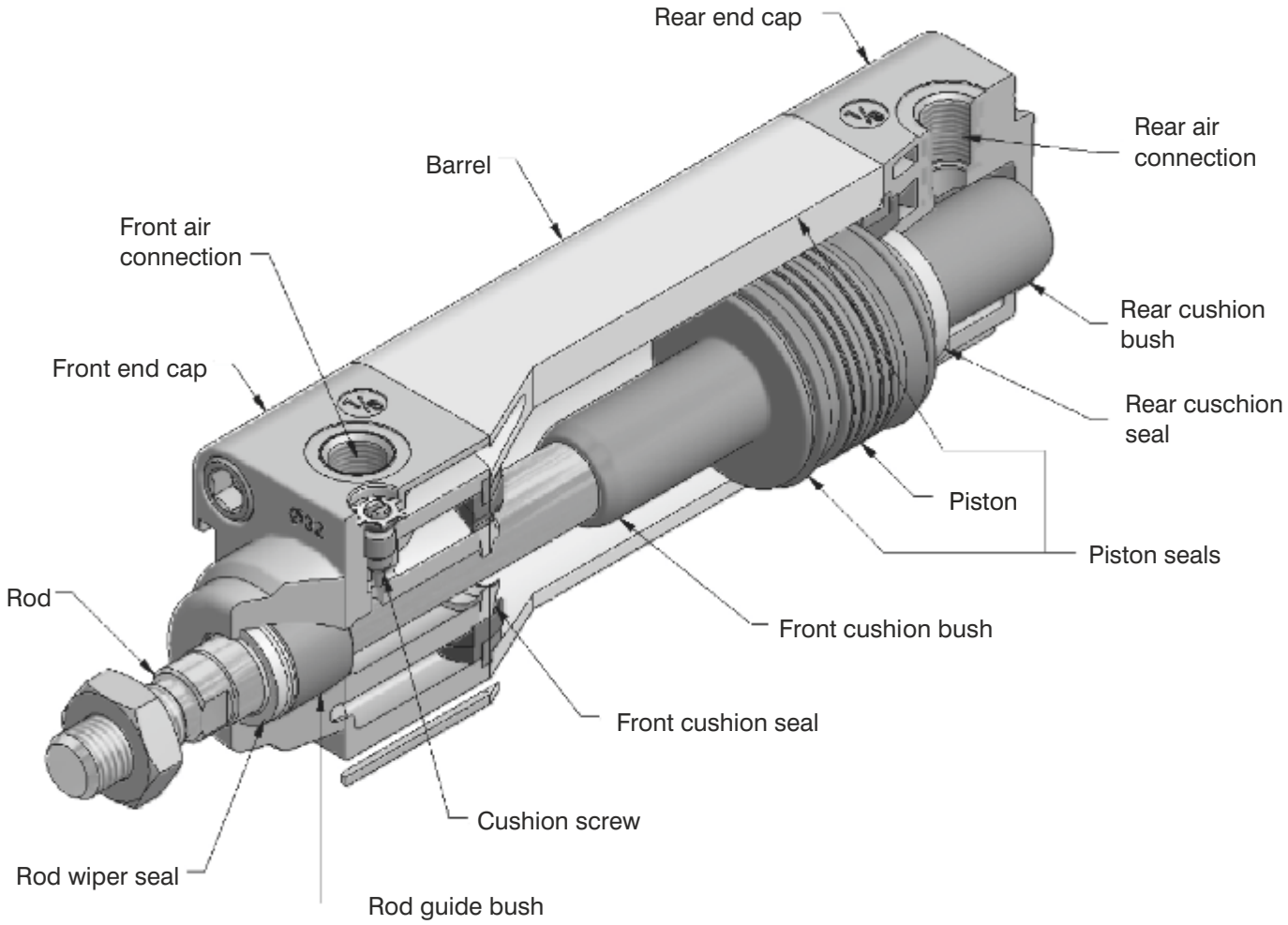

CYLINDER OPERATION DIAGRAM

A cylinder working cycle can be divided into 4 phases: start , acceleration, constant phase and cushioning.
Consider the diagram below showing a cylinder in rest position (piston rod IN) connected to a 5/2 valve (also in rest position (port 1 connected to port 2):
P1 = atmospheric pressure P2 = air line pressure (Pr)

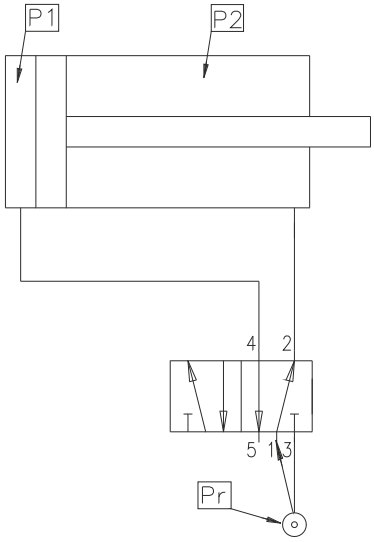

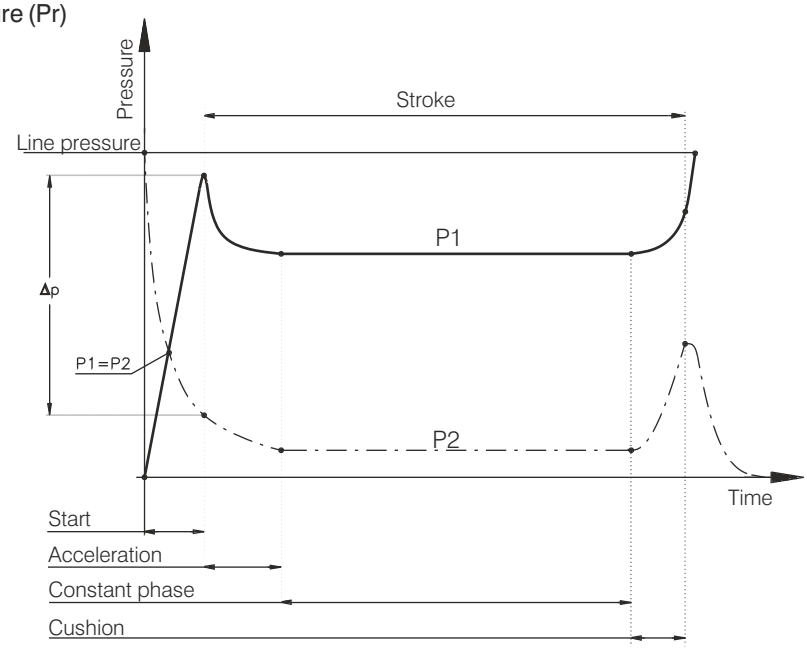

Start:
- actuating the 5/2 valve port 1 is connected to port 4 pressurizing the cylinder rear chamber ; in this conditions P1 increases while the front chamber exhaust the pressure through port 3 (port 2 connected to port 3) and therefore P2 decreases.
- theoretically when P1 reaches the same value of P2 the cylinder could start moving but in reality it still need to overcome friction and the load applied. When the Dp between the two pressures overcomes friction and load the cylinder will start moving

Acceleration:
The maximum speed is achieved at approximately 15 -30% of the unit stroke and is inversely proportional to the exhaust chamber volume and thereby the stroke; therefore considering units with the same bore the shorter the stroke the greater the acceleration will be.

Constant phase:

The translation speed is not always constant and is effected by many factors such as friction, load applied, mounting position, valve flow rate etc... The cylinder speed can be controlled by regulating the exhaust flow rate, always considering that it is important to use a valve with the highest possible flow rate (see section 09 “sizing and choosing a cylinder and valve) as the regulated speed would be lower than the maximum speed given by the valve.

Cushioning:
Is the final stage of the stroke when the front chamber exhaust flow is regulated. Under these conditions P2 grows and counteracts P1 reducing the unit speed until the end of stroke where P1 reaches the maximum value given by the air supply and P2 equals the atmospheric pressure.

CYLINDER AIR CONSUMPTION

The air consumption corresponds to the volume of air that the cylinder uses in a complete cycle (stroke out and back in) at a specific pressure.

Consumption= Pa x C x (A+b)

Pa= Absolute pressure (bar)
C= Cylinder stroke (dm)
A= see tab. 1 (dm^2)
b= see tab. 2 (dm^2)

Air consumption is measured in Normal-liters (Nl) which correspond to the volume that a specific quantity (mass) of gas would fill at atmospheric pressure.

Calculation example:

ISO 15552 cylinder - 1319 series:
Supply pressure 6 bar (Pa=7 bar)
stroke 50mm (C=0,5 dm)
Ø63 (A=0,31157 dm^2)
Rod Ø=20 mm (b=0,28017 dm^2)

Consumption = 7 (bar) x 0,5 (dm) x (0,31157+0,28017) = **2,072 Nl**
(In order to calculate the air consumption for a specific number of cycles it is sufficient to multiply the above value for the number of cycles)

Piston surface area

Ø cylinder	A
Ø 8	0,00502 dm^2
Ø 10	0,00785 dm^2
Ø 12	0,01130 dm^2
Ø 16	0,02010 dm^2
Ø 20	0,03140 dm^2
Ø 25	0,04906 dm^2
Ø 32	0,08038 dm^2
Ø 40	0,12560 dm^2
Ø 50	0,19625 dm^2
Ø 63	0,31157 dm^2
Ø 80	0,50240 dm^2
Ø 100	0,78500 dm^2
Ø 125	1,22656 dm^2
Ø 160	2,00960 dm^2
Ø 200	3,14000 dm^2

tab.1

Surface difference
Cylinder piston / rod Ø

Ø cylinder - Ø rod	b
Ø 8 - Ø 4	0,00377 dm^2
Ø 10 - Ø 4	0,00659 dm^2
Ø 12 - Ø 6	0,00848 dm^2
Ø 16 - Ø 6	0,01727 dm^2
Ø 20 - Ø 8	0,02638 dm^2
Ø 25 - Ø 10	0,04121 dm^2
Ø 32 - Ø 12	0,06908 dm^2
Ø 40 - Ø 14	0,11021 dm^2
Ø 40 - Ø 16	0,10550 dm^2
Ø 40 - Ø 18	0,10017 dm^2
Ø 50 - Ø 14	0,18086 dm^2
Ø 50 - Ø 18	0,17082 dm^2
Ø 50 - Ø 20	0,16485 dm^2
Ø 63 - Ø 20	0,28017 dm^2
Ø 63 - Ø 22	0,27357 dm^2
Ø 80 - Ø 22	0,46441 dm^2
Ø 80 - Ø 25	0,45334 dm^2
Ø 100 - Ø 25	0,73594 dm^2
Ø 100 - Ø 30	0,71435 dm^2
Ø 125 - Ø 30	1,15591 dm^2
Ø 125 - Ø 32	1,14618 dm^2
Ø 160 - Ø 40	1,88400 dm^2
Ø 200 - Ø 40	3,01440 dm^2

tab.2

Allowed axial load (combined bending and compressing load)

This is the maximum load that can be applied axially on the rod tip. Above this value the rod might bend under compression. This value depends on a number of factors such as load size, rod diameter, the distance at which the load is applied (bending and compressing length L) and the conditions under which the load is applied (cylinder mountings).
Among the possible conditions, the following three are the most common.

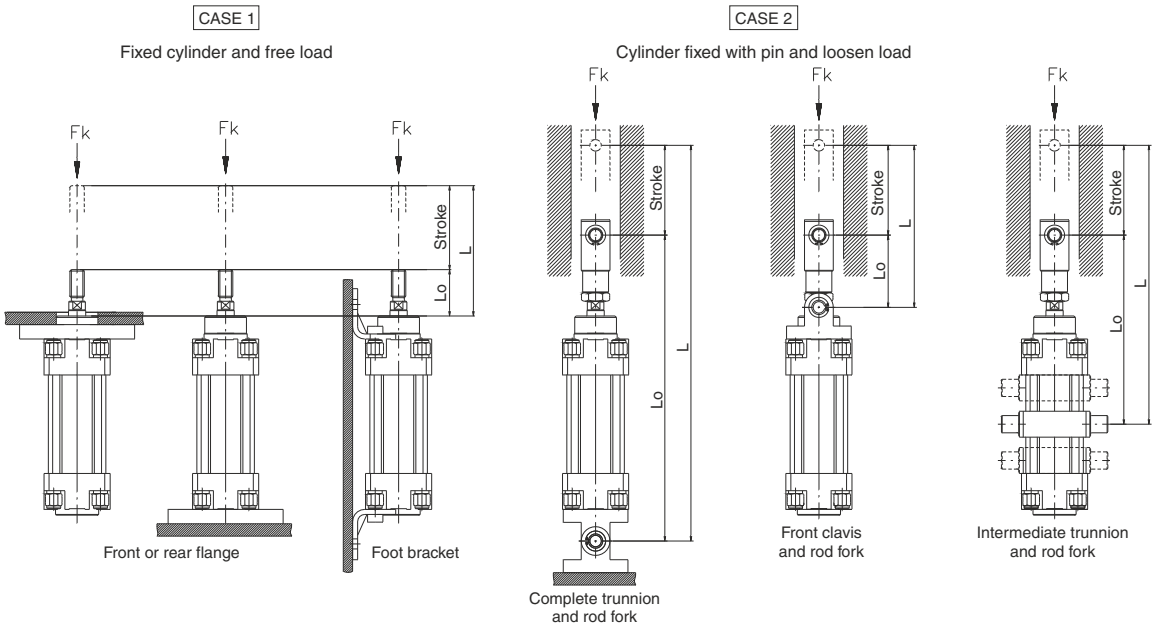

The maximum axial load can be calculated in two ways:
In an empirical way (see equations) or by checking the following diagram which shows the worst possible conditions (case 1 & 2) For all other possible mountings alternatives the axial load will surely be higher.

$$Fk = \frac{p^3 \times E \times d^4}{64 \times L^2 \times C} \quad (N)$$

$$d = \sqrt{\frac{Fk \times 64 \times L^2 \times C}{p^3 \times E}} \quad (cm)$$

$$L = \sqrt{\frac{p^3 \times E \times d^4}{Fk \times 64 \times C}} \quad (cm)$$

E= rod material coefficient of elasticity (N/cm^2) (steel=2,1x10^7 N/cm^2)

d= rod diameter (cm)

L= bending and compression distance (cm)

C= safety factor (da 2,5 a 5)

Example: **Axial load verification**

Cylinder ø80 mm
Rod diameter ø20 mm
Stroke 600 mm
Mounting CASE 2 intermediate trunnion: L0=290 mm
Carico 2000 N
L (distance) = 29+60=89 cm
Fk= (p^3 x 2,1 x 10^7 x 2^4) : (64 x 89^2 x 5) = 4104 N
(Above the 2000 N applied)

The same result can be obtained using the below diagram : following the bending and compression distance line relative to 900mm up to the intersection with the 20mm Ø line we obtain 4000N.

Example: **rod diameter sizing**

Considering the same conditions as in the above case we need to determinate the rod diameter suitable to withstand a 4000N load

$$d = \sqrt{(4000 \times 64 \times 89^2 \times 5) / (p^3 \times 2{,}1 \times 10^7)} = 2 \text{ cm}$$

The diameter to choose is the next one up : Ø25 mm

Also this second example can be resolved using the below diagram: following the bending and compression distance line relative to 900mm up to the intersection with the 4000N maximum load we obtain Ø20 mm.

With the third equation or using the diagram it is possible to calculate the bending and compression distance.

Axial load diagram

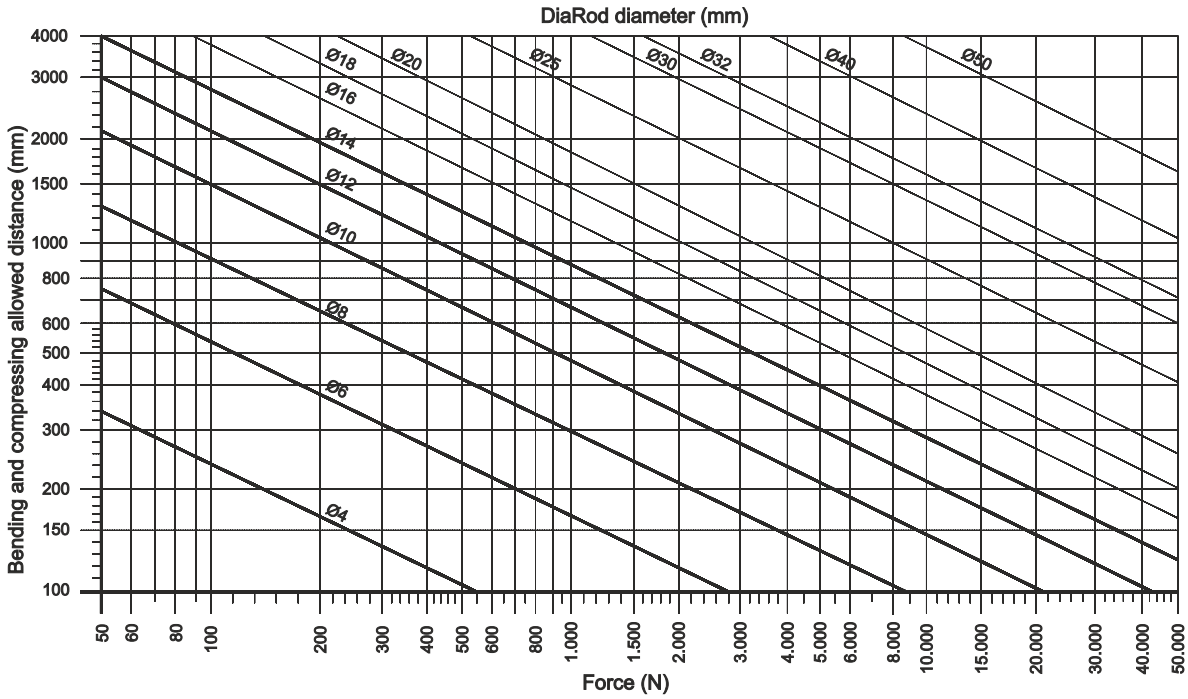

END OF STROKE CUSHIONING CAPABILITY

The function of the end of stroke cushioning is to reduce the kinetic energy generated by movement of the load and to prevent high speed impact between the piston and end caps that could compromise the unit functionality.
The use of non-cushioned cylinders is not recomended on high speed applications unless external means of deceleration (such as dampers) are used.

The maximum load that can be cushioned depends on the speed of the unit and the cylinder cushioning capacity. The chartbelow shows the values relative to the ISO 15552 series cylinders considering the out stroke movement and a supply pressure of 6 bar. The acceptable values for any diameter are those found below each size line.

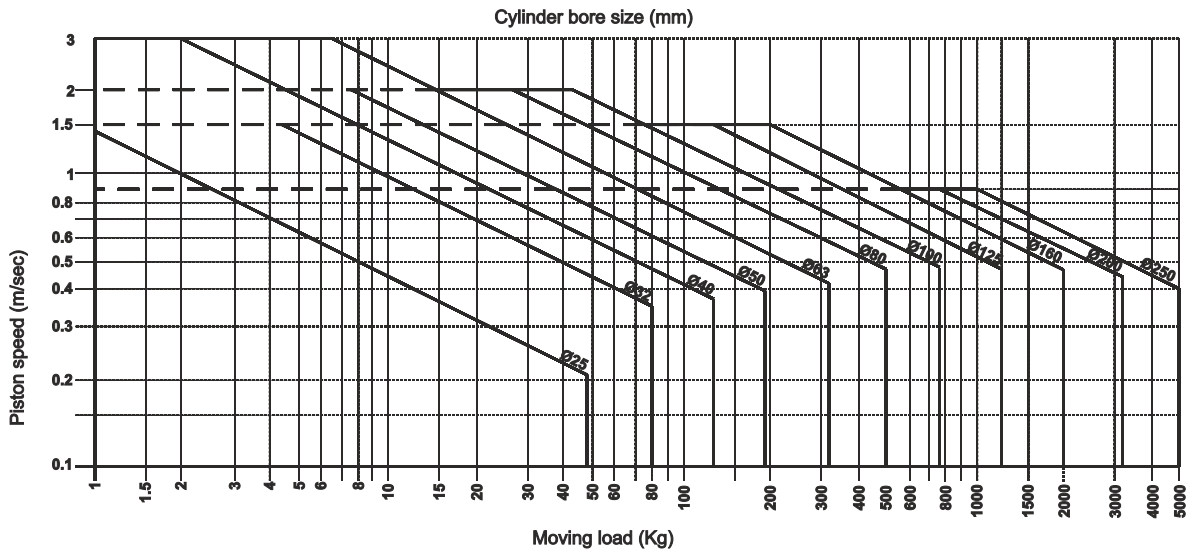

THEORETICAL FORCE -PUSH- (N) - rod moving out

Bore (mm)	Push area (mm^2)	Feeding pressure (bar)									
		1	2	3	4	5	6	7	8	9	10
Ø6	28	2,5	5,5	8	11	13,5	16,5	19	22	24,5	27,5
Ø8	50	4,5	9,5	14,5	19,5	24,5	29,5	34	39	44	49
Ø10	79	7,5	15	23	30,5	38	46	53,5	61,5	69	76,5
Ø12	113	11	22	33	44	55	66	77	88	99	110
Ø16	201	19	39	59	78	98	118	137	157	177	197
Ø20	314	30	61	92	123	153	184	215	246	277	307
Ø25	491	48	96	144	192	240	288	336	384	433	481
Ø32	804	78	157	236	315	394	472	551	630	709	788
Ø40	1.256	123	246	369	492	615	739	862	985	1.108	1.231
Ø50	1.963	192	384	577	769	962	1.154	1.347	1.539	1.732	1.924
Ø63	3.116	305	611	916	1.222	1,527	1.833	2.138	2.444	2.749	3.055
Ø80	5.024	492	985	1.478	1.970	2,463	2.956	3.448	3.941	4.434	4.926
Ø100	7.850	769	1.539	2.309	3.079	3,849	4.618	5.388	6.158	6.928	7.698
Ø125	12.266	1.202	2.405	3.608	4.811	6,014	7.217	8.419	9.622	10.825	12.028
Ø160	20.096	1.970	3.941	5.912	7.882	9.853	11.824	13.795	15.765	17.736	19.707
Ø200	31.400	3.079	6.158	9.237	12.317	15.396	18.475	21.555	24.634	27.713	30.792
Ø250	49.063	4.811	9.622	14.434	19.245	24.056	28.868	33.679	38.491	43.302	48.113

The following equations is used to calculate the force generated in the return stroke (rod moving back in)
F [N] = (Cylinder area - Rod area) [mm^2] x Pressure [bar] x 9,81

In order to obtain the cylinder real force, reduce the theoretical value by 10-15%

Surface difference - Cylinder piston / rod Ø

Ø cylinder - Ø rod	b
Ø 8 - Ø 4	0,377 cm^2
Ø 10 - Ø 4	0,659 cm^2
Ø 12 - Ø 6	0,848 cm^2
Ø 16 - Ø 6	1,727 cm^2
Ø 20 - Ø 8	2,638 cm^2
Ø 25 - Ø 10	4,121 cm^2
Ø 32 - Ø 12	6,908 cm^2
Ø 40 - Ø 14	11,021 cm^2
Ø 40 - Ø 16	10,550 cm^2
Ø 40 - Ø 18	10,017 cm^2
Ø 50 - Ø 14	18,086 cm^2
Ø 50 - Ø 18	17,082 cm^2
Ø 50 - Ø 20	16,485 cm^2
Ø 63 - Ø 20	28,017 cm^2
Ø 63 - Ø 22	27,357 cm^2
Ø 80 - Ø 22	46,441 cm^2
Ø 80 - Ø 25	45,334 cm^2
Ø 100 - Ø 25	73,594 cm^2
Ø 100 - Ø 30	71,435 cm^2
Ø 125 - Ø 30	115,591 cm^2
Ø 125 - Ø 32	114,618 cm^2
Ø 160 - Ø 40	188,400 cm^2
Ø 200 - Ø 40	301,440 cm^2

tab.2

SINGLE ACTING CYLINDER SPRING INITIAL AND FINAL LOAD CHARACTERISTICS.

Microcylinders ISO 6431 - 1260 series

	front spring	rear spring	Bore						
			Ø12	Ø16	Ø20	Ø25	Ø32	Ø40	Ø50
Initial load (N) external spring			9,9	10,8	10,8	7,9	19,7	39,3	39,3
Final load (N) compressed load			26,5	22,6	22,6	49,1	53,0	106,0	106,0

(stroke 0-40 mm)

Microcylinders ISO 6431 - 1280 series "MIR"

	front spring	rear spring	Bore						
			Ø8	Ø10	Ø12	Ø16	Ø20	Ø25	Ø32
Initial load (N) external spring			2,2	2,2	4,0	7,5	11,0	16,5	23,0
Final load (N) compressed load			4,2	4,2	8,7	21,0	22,0	30,7	52,5

(stroke 0-50 mm)

Cylinders ISO 15552 - 1319-20-21 series

	front spring	rear spring	Bore					
			Ø32	Ø40	Ø50	Ø63	Ø80	Ø100
Initial load (N) external spring			17,2	24,6	51,0	51,0	98,1	98,1
Final load (N) compressed load			41,7	83,4	114,8	114,8	194,2	194,2

(stroke 0-50 mm)

Short stroke compact cylinders

	front spring	rear spring	Bore							
			Ø20	Ø25	Ø32	Ø40	Ø50	Ø63	Ø80	Ø100
Initial load (N) external spring			7,9	9,9	34,4	34,4	50,1	54,0	117,7	108,9
Final load (N) compressed load			27,5	26,5	59,9	63,8	79,5	85,4	157,0	134,4

(stroke 0-10 mm)

"Europe" Compact cylinders

	front spring	rear spring	Bore									
			Ø12	Ø16	Ø20	Ø25	Ø32	Ø40	Ø50	Ø63	Ø80	Ø100
Initial load (N) external spring			3,9	4,4	4,9	9,8	12,3	16,7	27,5	37,3	59,4	101,3
Final load (N) compressed load			9,3	17,7	18,1	25,5	34,3	44,1	51,0	63,8	99,4	141,9

(Ø12 stroke 0-10 mm - Ø16-100 stroke 0-25 mm)

CYLINDER NUTS RECOMMENDED TIGHTENING TORQUE

Bore size	Torque (Nm)
Ø32	8
Ø40	8
Ø50	16
Ø63	16
Ø80	22
Ø100	22
Ø125	30
Ø160	85
Ø200	85

08 - Choosing /sizing a cylinder and valve

- Pipe flow resistence
- Valve sizing
- Cylinder sizing

08

PIPE FLOW RESISTENCE

Flow rate Qn

Flow rate is calculated as the volume at normal conditions (atmospheric pressure,20° C temperature) in relation to time.
The measurement unit is the normal litre per minute (Nl/min)
The normal litre is the specific quantity of compressed air, and corresponds to the volume that it would fill at atmospheric pressure
Flow rate is measured with standardised measuring equipment and, as previously explained, defines parameters such as:

kv (l/min) measured with water $\Delta P = 1$ bar
Kv(m^3/ora) measured with water $\Delta P = 1$bar
Cv(USA gallons/min) measured with water $\Delta P = 1$ psi (0,07 bar)

The chart below shows some of the conversion coefficients (see also pag. IX)

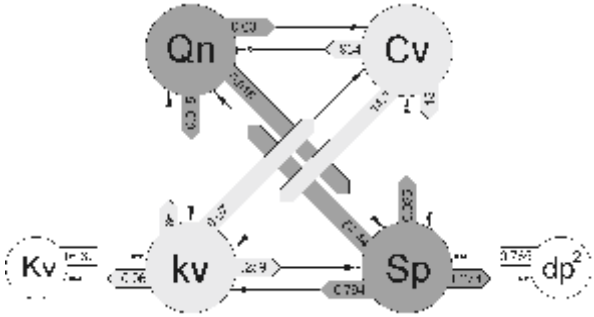

Qn	Nominal flow rate	Nl/min
kv	Hydraulic coefficient	l/min
Kv		m^3/hours
Cv		USA gallons/min
Sp	Nominal inner section area	mm^2
dp^2	Nominal diameter ^{2}	mm^2

* to calculate the diameter dp (mm^2) square root of dp^2

Pipes flow resistence

The C factor (l/sec) indicates the pipe flow capacity and is the ratio between the maximum flow rate and absolute pressure (ISO 6358) .The flow capacity progressively decreases with increasing pipe length, due to the air friction on the pipe inner surface increasing the pressure drop. Therefore the longer the pipe the smaller the flow rate.
The chart below shows the flow rate characteristics of different pipe sizes (i/d and o/d) in function of the length.

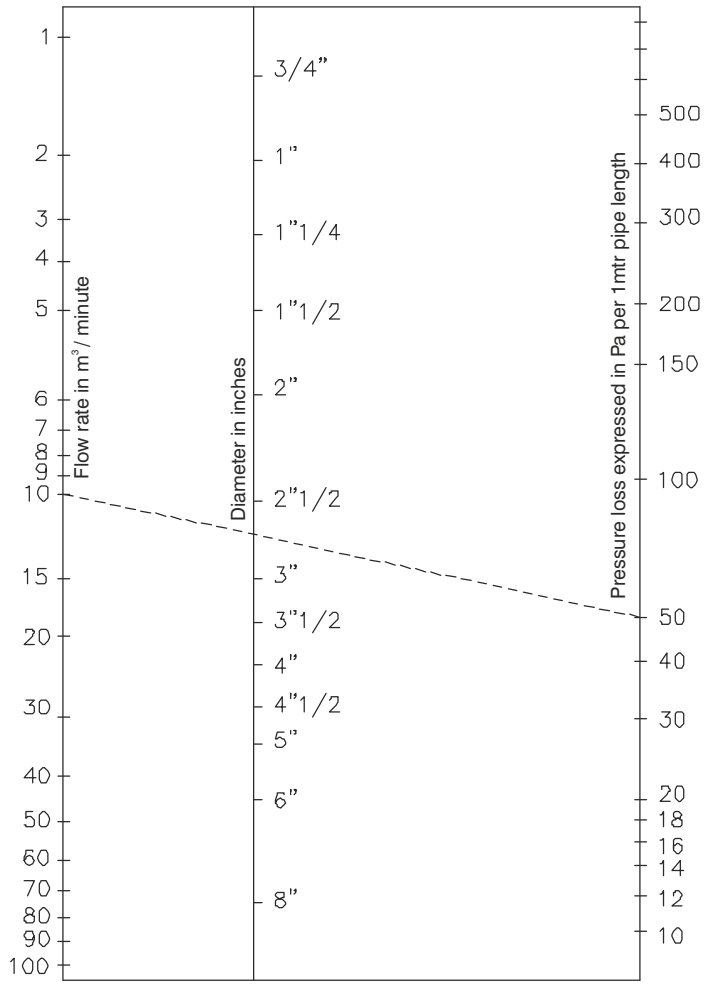

VALVE SIZING

The choice of the correct size valve is essential in order to ensure that the cylinder to be controlled will perform as expected. It is therefore necessary to know the cycle time to be achieved and to calculate the coefficient T which will be used as multiplier for the air consumption value previously calculated. The result of this equation, expressed in Nl/min and multiplied by a safety factor of 1.2, corresponds to the minimum flow rate needed (at standard conditions 6 bar supply and 5 bar on the consumption connection) to operate the cylinder at the required rate.

$$T = \frac{60}{\text{Cycle time}} \qquad Qn = T \times \text{Consumption}$$

It is also imortant to ensure that the pipes used to connect the valve to the air supply and to the cylinder do not affect the flow rate in any way. The pipe inner bore must therefore be at least 1.5 times the diameter of the valve nominal orifice size. The choice of the fittings is also very important, the inner bore must be equal or greater than the pipe I/D. The diagram below shows the flow rate required to operate different size cylinders atvarying speeds and also the valve connection sizes.

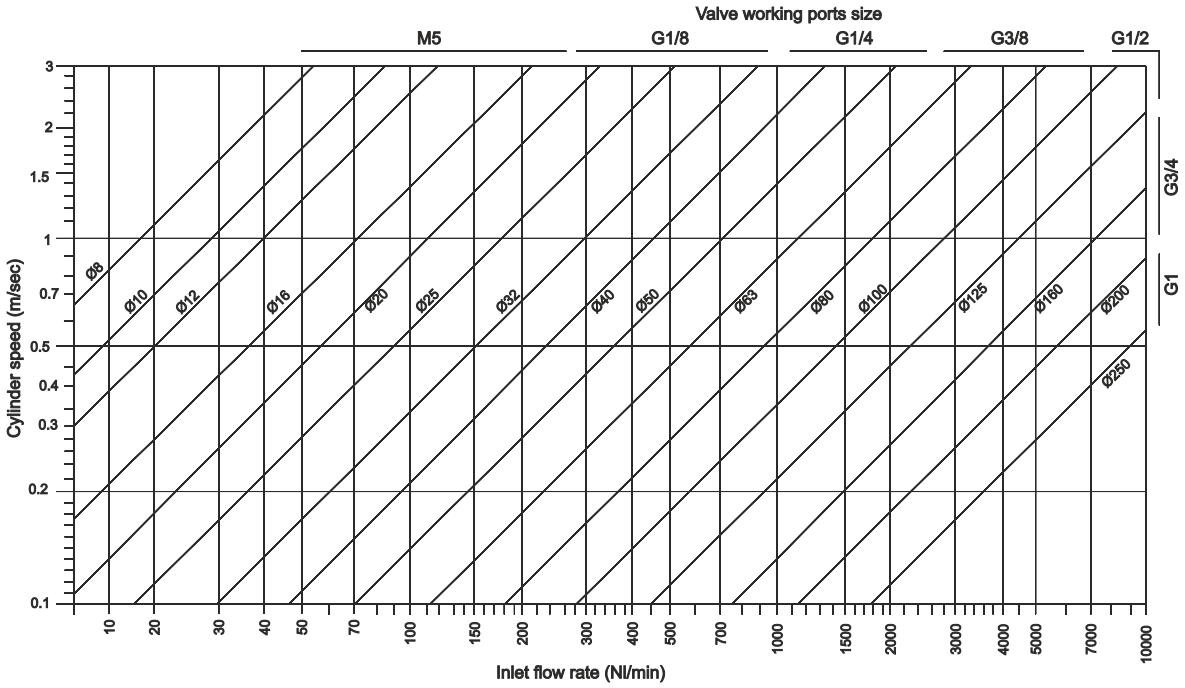

CYLINDER SIZING

In order to properly size a cylinder it is necessary to consider the following parameters:

Force generated : calculated in function of the piston area and of the pressure that acts upon it.

$$F = \text{area} \times \text{pressure} \qquad (daN) = (cm^2) \times (bar)$$

The value is theoretical and needs to be reduced by approximately 10-15% in order to compensate for the effects of friction. We must also consider that the force generated during the return stroke (traction) is lower, as the area on which the pressure acts is reduced by the presence of the rod.

Weight of the load : the force generated by the cylinder must be sufficient to move the load in the desired direction within the specified time (cycle time). The load ratio (RdC) must not exceed 70%.

$$\frac{\text{Needed force (load weight)}}{\text{Available force (generated)}} \times 100 = RdC$$

LOAD POSITION

Vertical lift (pull upwards): the real force generated by the cylinder must be sufficient to counterbalance the load and to accelerate it
Example:
Weight to be lifted 120Kg
Working pressure 6 bar
Load ratio 70%
Using the load ratio equation it is possible to calculate the force needed to lift the load:

$$\text{Available force} = \frac{\text{Load}}{\text{Rdc}} \times 100 \qquad \text{the result is 171,4 daN}$$

A 63 bore cylinder which generates a theoretical force of 187 daN is suitable for the application.
A similar load ratio allows, using unidirectional flow regulators, good speed control.

When the speed is below 20mm/sec. It is difficult to properly control the movement.
The load ratio must be reduced to 50% on slow speed applications. In these conditions, or where constant movement is required, the use of a hydraulic speed control unit is recommended.
On applications were the load is moving downwards, thereby increasing the force generated by the actuator, it is usually necessary to use flow regulators.

Horizontal or inclined movement: If the load is supported and the working position is horizontal, it is necessary to multiply the needed force by the coefficient of friction.
The coefficient of friction m varies according to the material.
For example considering m= 0.4
Weight to be moved 120Kg
Pressure 6 bar
Load ratio 70%
Solving the load ratio equation it is possible to calculate the available force:

$$\text{Available force} = \frac{\text{Load}}{\text{RdC}} \times 100 \times m \qquad \text{which, in the above conditions is 68,57 daN}$$

A Ø40 bore cylinder that generates a theoretical force of 75.4 daN is suitable for the application.
In cases of inclined application the required force increases according to the angle.
Also in these conditions it is necessary to multiply the needed force by a coefficient of friction.

End of stroke cushioning

The air cushion damping function is to absorb the kinetic energy in order to prevent end of stroke impacts which could damage the unit. Once the cylinder has been chosen, based on the parameters previously described, it is necessary to verify its capacity to absorb the kinetic energy. Using the chart below it is possible to verify, for each diameter and combination of speed/load, the suitability of the cylinder. The pressure value considered is 6 bar.

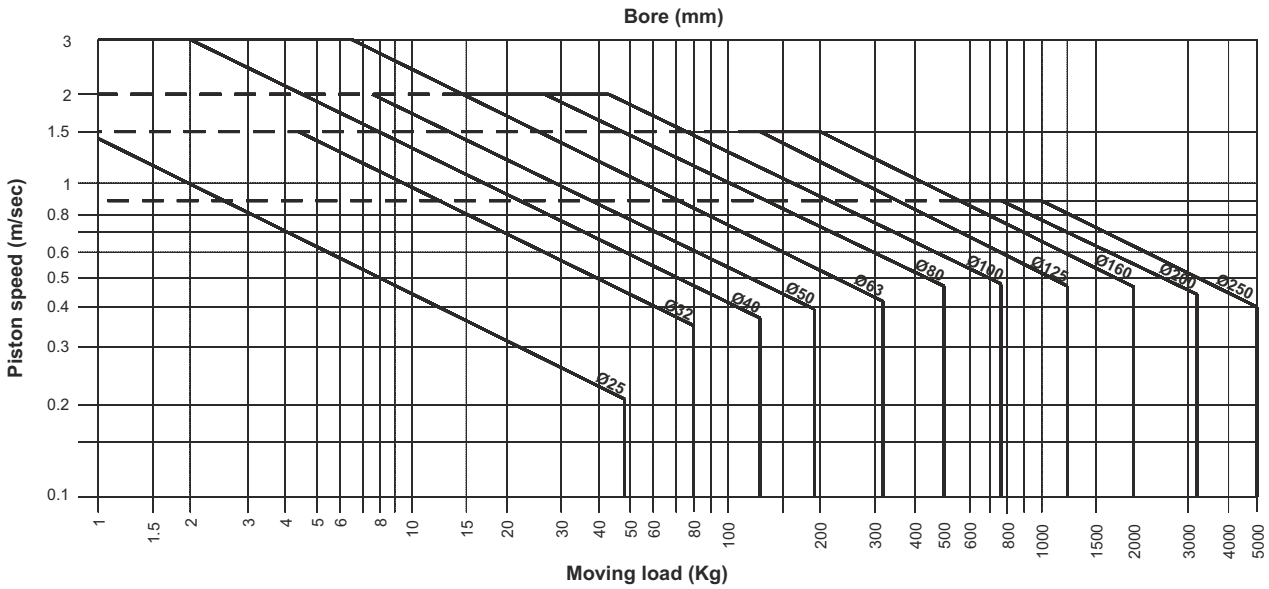

Axial load

Is a load that is applied axially to the rod tip. Under the action of axial load the rod can flex. The amount of flexion depends on the following factors:
-load applied
-rod size and length
-mountings used to hold the cylinder in position.
The worst case scenario is when the cylinder is fixed at both ends; on all other conditions the load allowed can be up to 50% greater.

The dimension to be considered is::

Ltot = Lo +stroke

CASE “A”

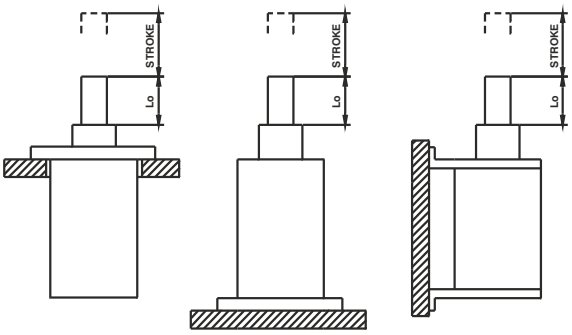

CASE “B”

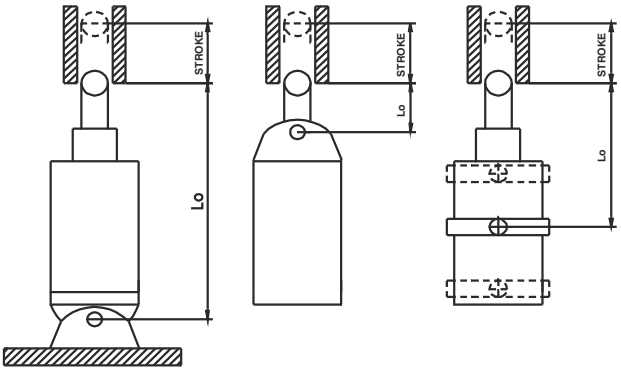

The below chart shows the values relative to the ISO 15552 series cylinders considering the out stroke movement and a supply pressure of 6 bar. The acceptable value for each diameters are those found below each size line.

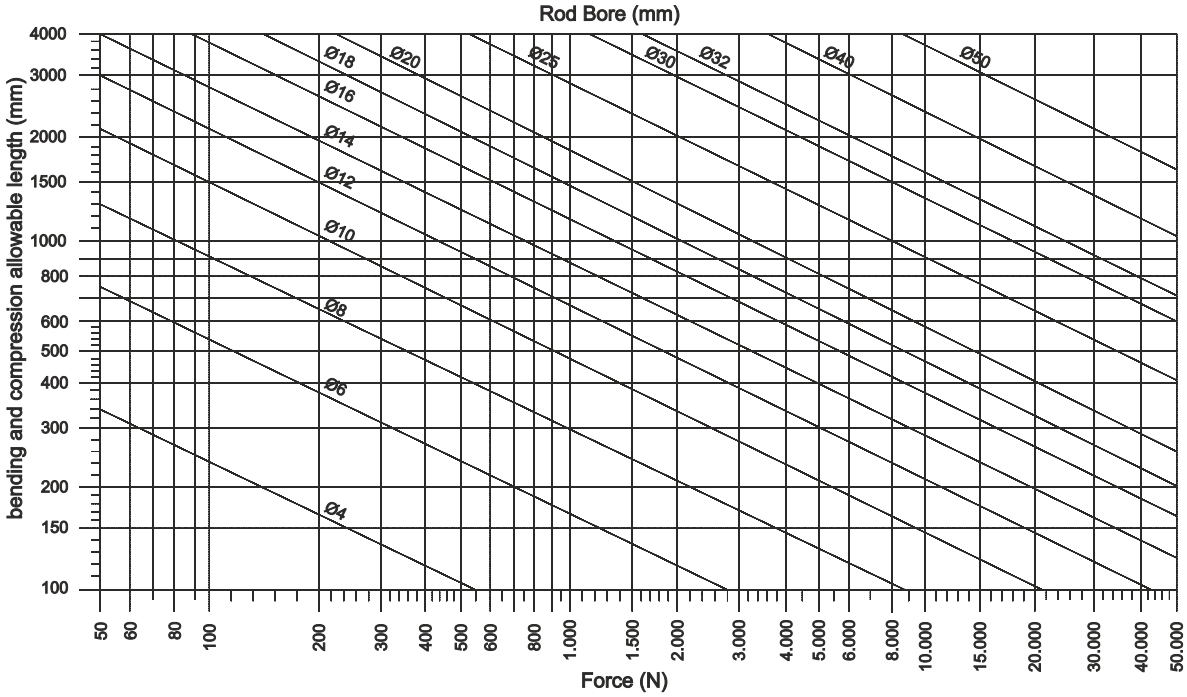

09 - Electrical current - basic principles and nomenclature

09

Voltage: is the difference of electrical potential between two points of an electronic circuit, expressed in volts (V). It is a measure of the capacity (not the technical meaning) of an electric field to cause an electric current in an electrical conductor. Depending on the difference of electrical potential it is called extra low voltage, low voltage, high voltage or extra high voltage. Voltage is measured with the volmeter connected in parallel to the electric circuit.

Current: is by definition the flow of electric charge in an electrical conductor, expressed in ampere (A).
Current is measured with the amperometer connected in series to the electric circuit.

Power: measured in Watt (W) is the product between current and voltage . **W = V x I**

For example a 15 mm valve power is 2,3W at 24 VDC
Current = 2,3 / 24 = 0,095 A = 95mA
Power = 24 x 0,095 = 2,3W

Frequency: is the measurement of the number of times that a repeated event occurs per unit of time. It is also defined as the rate of change of phase of a sinusoidal waveform. Is measured in Hertz (Hz). In Europe the frequency is 50Hz,In the USA is 60Hz.
In order to use a 50Hz coil on a 60Hz application it is necessary to compensate the voltage by a 60/50 factor and vice-versa

V(60Hz) = V(50Hz) . (60/50) V(50Hz) = V(60Hz) . (50/60)

Alternating current (AC) is an electrical current whose magnitude and direction vary cyclically, as opposed to direct current, whose direction remains constant. The usual waveform of an AC power circuit is a sine wave. The number of repetitions per second is the frequency

Direct current (DC) is an electrical current whose magnitude and direction remain constant in time. In a Direct current system it is important to observe the current direction, or the polarity.

Resistance (R): is a measure of the degree to which an object opposes the passage of an electric current, measured in ohm (W).

The quantity of resistance in an electric circuit determines the amount of current flowing in the circuit for any given voltage applied to the circuit.

In a long wire with small section the resistance will be greater than in a short wire with a larger section. This is similar to what happens in pneumatic applications where with a long and small bore pipe, the flow is smaller than in a shorter pipe with larger bore.

Coils
The coil working principle is based on a conductor (usually copper wire) wound around a cylindrically shaped support manufactured in a non-magnetic material. When energised the conductor generates a magnetic field which passes through the centre of the coil itself. If a metallic object is positioned in the centre of the support, the magnetic field strength is increased. The two points where the magnetic field enters the coils represent its magnetic poles as in a magnet.

Magnetic gap
In an electromagnetic system the magnetic gap is the distance between the moving metal core and the fixed armature. When working with alternating current the impedance is maximum when the magnetic gap is nil and vice versa (impedance is minimum when the magnetic gap is maximum). As a consequence , according to Ohm's law, the current consumption is higher at start up and lower during the holding condition.

Shading ring
The magnetic field generated by an alternating current coil periodically fluctuates from a maximum value to zero which generates vibration of the moving core. The solution to this phenomenon is the “shading ring” which is a small copper ring positioned at the end of the fixed armature. The shading ring generates an out of phase current which prevents the magnetic field from reaching zero, such that the vibration is not longer perceptible

Equations

Voltage	**V**	= R x I	Volt (V)	Product of resistance and current
Current	**I**	= V / R	Ampere (A)	Voltage / resistance ratio
Power	**W**	= V x I	Watt (W)	Product of voltage and current
		= R x I^2		Product of resistance and $current^2$
		= V^2 / R		$Voltage^2$/ resistance ratio
Resistance	**R**	= V / I	Ohm (Ω)	Voltage / current ratio
		= V^2 / W		$Voltage^2$/ power ratio

MECHANICAL-MANUAL AND PNEUMATIC VALVES

Miniature valves 2/2, 3/2, 5/2-5/3-and tube ø4 (Series 104)
Miniature valves 3/2, 5/2, M5 (Series 105)
Tappet / Pneumatic / Pusch button / Switch
Lever roller / Accessories / Lever button
Lever panel / Push button / Switch / Whisker / Handle

Valvole 3/2, 5/2, 5/3-G1/8" ÷ G1"
(Serie 200)
Tappet / Lever roller / Lever button / Lever sensitive
Lever panel / Lever front / Push button / Switch
Lever lateral / Pedal

General

New 104 micro valves series have been realized as an economic version to complete the range of 105 valves version. With their small overall dimensions it makes easy installation and operation.
Their main characteristic is the possibility to choose between the version with lateral or rear pneumatic connections realized with quick fitting for Ø 4 mm. tube included.
The valves are available with 2 or 3 ways versions, normally closed or open, 5 ways and 5 ways 3 positions open centres and pressured centres.
The 5 ways version is made with two 3 ways valves placed side by side with common inlet.
The operators available for this valve are push button (different versions), selector (key, short and long lever), lever (lever roller or lever unidirectional) and pneumatic.
It is also possible to combine the 2 and 3 ways valves with electrical switches, normally closed or open.

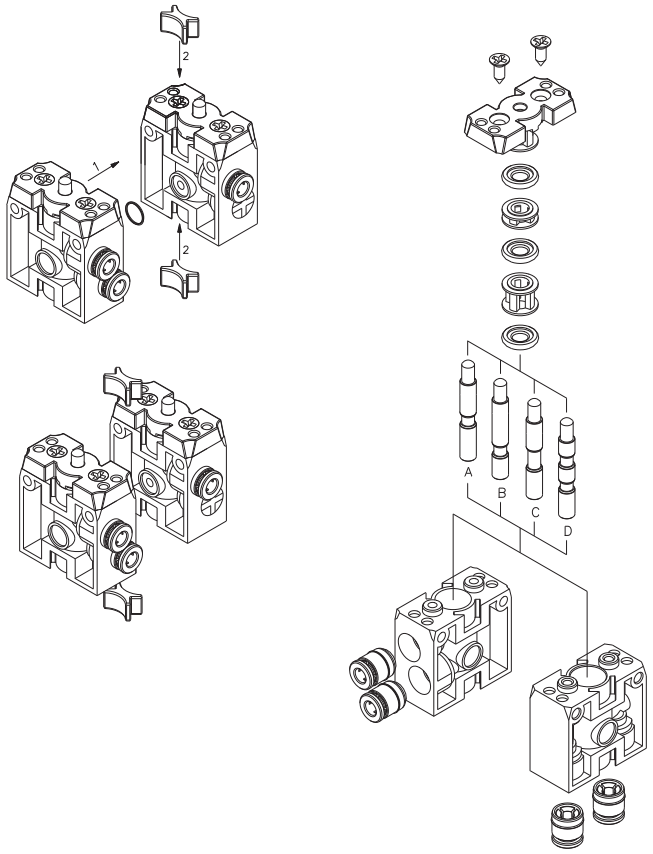

A : 2/2 N.C.
B : 2/2 N.O.
C : 3/2 N.C.
D : 3/2 N.O.

Construction characteristics

Body and cover	Technopolymer
Actuators	Plastic material for buttons and switches
Seals	NBR
Spacer	Acetal resin
Spool	Steel
Spring	Spring steel

Use and maintenance

These valves have an average life of 15 million cycles depending on the application and air quality, filtered and lubricated air using specified lubricants will dramatically reduce the wear of the seals and ensures long and trouble free operation.
Please ensure that the valve is being used according with the manufacturers specification, such as air pressure and temperature and that exhaust ports 3 & 5 are protected against the possible ingress of dirt or debris.
Repair kits including the spool complete with seals are available for overhauling the valves; however, although this is a simple operation it should be carried out by a competent person.

ATTENTION: use hydraulic oil class H for lubrication such as MAGNA GC 32 (Castrol).

Tappet - Spring

2/2
3/2

Lateral connections

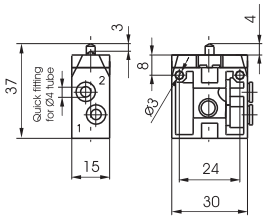

Weight gr. 20
Operating force 13 N

Ordering code

104.Ⓣ.0.1.ⓅⒻ

Ⓣ	TYPE
	22 = 2 ways
	32 = 3 ways
Ⓟ	CONNECTION TYPE
	L = Lateral
	P = Rear
Ⓕ	FUNCTION
	A = Normally Open
	C = Normally Closed

2/2
3/2

Tappet - Spring

Rear connections

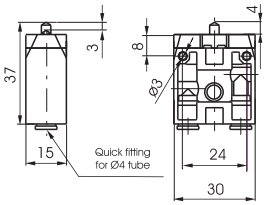

Weight gr. 20
Operating force 13 N

Operational characteristic

Fluid	Max working pressure (bar)	Temperature °C	Flow rate at 6 bar with Δp=1 (Nl/min)	Orifice size (mm)	Working ports size
Filtered air, with or without lubrication	10 bar	-5 - +70	90 Nl/min	mm 2,5	ø4 tube

Push button - Spring

2/2
3/2

Lateral connections

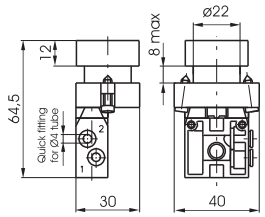

Weight gr. 50
Operating force 18 N

Ordering code

104.Ⓣ.6.22/Ⓒ.ⓅⒻ

Ⓣ	TYPE
	22 = 2 ways
	32 = 3 ways
Ⓒ	BUTTON COLOR
	1 = Red
	2 = Black
	3 = Green
	4 = Yellow
Ⓟ	CONNECTION TYPE
	L = Lateral
	P = Rear
Ⓕ	FUNCTION
	A = Normally Open
	C = Normally Closed

2/2
3/2

Push button - Spring

Rear connections

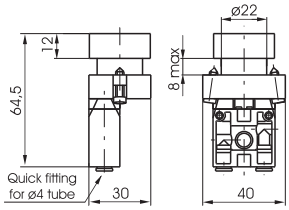

Weight gr. 50
Operating force 18 N

Operational characteristic

Fluid	Max working pressure (bar)	Temperature °C	Flow rate at 6 bar with Δp=1 (Nl/min)	Orifice size (mm)	Working ports size
Filtered air, with or without lubrication	10 bar	-5 - +70	90 Nl/min	mm 2,5	ø4 tube

Push button - Spring

5/2

Lateral connections

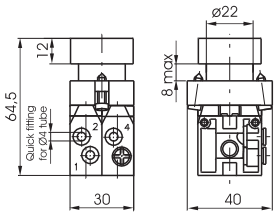

Weight gr. 105
Operating force 30 N

Ordering code

104.52.6.22/Ⓒ.Ⓟ

Ⓒ	BUTTON COLOR
	1 = Red
	2 = Black
	3 = Green
	4 = Yellow
Ⓟ	CONNECTION TYPE
	L = Lateral
	P = Rear

5/2

Push button - Spring

Rear connections

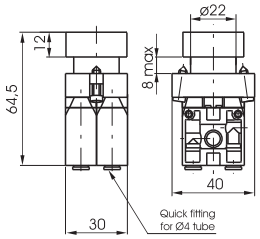

Weight gr. 105
Operating force 30 N

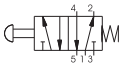

Operational characteristic

Fluid	Max working pressure (bar)	Temperature °C	Flow rate at 6 bar with Δp=1 (Nl/min)	Orifice size (mm)	Working ports size
Filtered air, with or without lubrication	10 bar	-5 - +70	90 Nl/min	mm 2,5	ø4 tube

1

Push button 2 positions (step - step)

2/2
3/2

Lateral connections

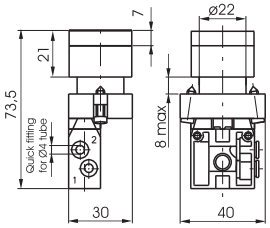

Weight gr. 60
Operating force 18N

Ordering code

104.Ⓣ.6.31.ⓅⒻ

Ⓣ	TYPE
	22 = 2 ways
	32 = 3 ways
Ⓟ	CONNECTION TYPE
	L = Lateral
	P = Rear
Ⓕ	FUNCTION
	A = Normally Open
	C = Normally Closed

2/2
3/2

Push button 2 positions (step - step)

Rear connections

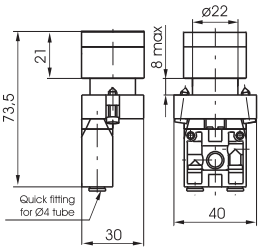

Weight gr. 60
Operating force 18N

Operational characteristic

Fluid	Max working pressure (bar)	Temperature °C	Flow rate at 6 bar with Δp=1 (Nl/min)	Orifice size (mm)	Working ports size
Filtered air, with or without lubrication	10 bar	-5 - +70	90 Nl/min	mm 2,5	ø4 tube

Push button 2 positions (step - step)

5/2

Lateral connections

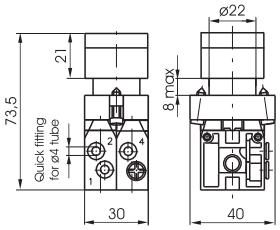

Weight gr. 110
Operating force 30N

Ordering code

104.52.6.31.Ⓟ

Ⓟ	CONNECTION TYPE
	L = Lateral
	P = Rear

5/2

Push button 2 positions (step - step)

Rear connections

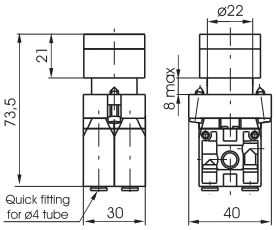

Weight gr. 110
Operating force 30N

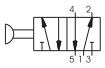

Operational characteristic

Fluid	Max working pressure (bar)	Temperature °C	Flow rate at 6 bar with Δp=1 (Nl/min)	Orifice size (mm)	Working ports size
Filtered air, with or without lubrication	10 bar	-5 - +70	90 Nl/min	mm 2,5	ø4 tube

Raised Push button - Spring

2/2
3/2

Lateral connections

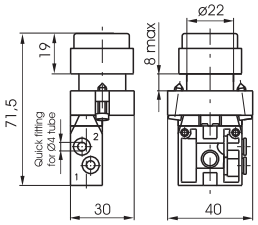

Weight gr. 50
Operating force 18N

Ordering code

104.Ⓣ.6.23/Ⓒ.ⓅⒻ

Ⓣ	TYPE
	22 = 2 ways
	32 = 3 ways
Ⓒ	BUTTON COLOR
	1 = Red
	2 = Black
	3 = Green
	4 = Yellow
Ⓟ	CONNECTION TYPE
	L = Lateral
	P = Rear
Ⓕ	FUNCTION
	A = Normally Open
	C = Normally Closed

2/2
3/2

Raised Push button - Spring

Rear connections

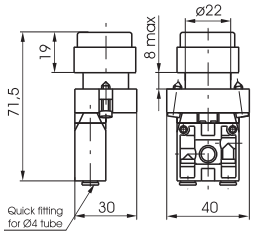

Weight gr. 50
Operating force 18N

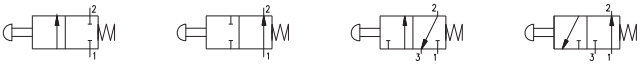

Operational characteristic

Fluid	Max working pressure (bar)	Temperature °C	Flow rate at 6 bar with Δp=1 (Nl/min)	Orifice size (mm)	Working ports size
Filtered air, with or without lubrication	10 bar	-5 - +70	90 Nl/min	mm 2,5	ø4 tube

Raised Push button - Spring

5/2

Lateral connections

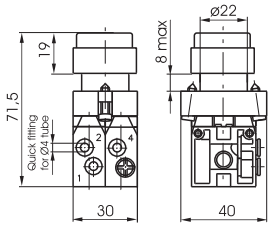

Weight gr. 105
Operating force 30N

Ordering code

104.52.6.23/Ⓒ.Ⓟ

	BUTTON COLOR
Ⓒ	1 = Red
	2 = Black
	3 = Green
	4 = Yellow
	CONNECTION TYPE
Ⓟ	L = Lateral
	P = Rear

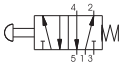

5/2

Raised Push button - Spring

Rear connections

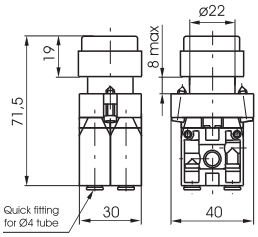

Weight gr. 105
Operating force 30N

Operational characteristic

Fluid	Max working pressure (bar)	Temperature °C	Flow rate at 6 bar with Δp=1 (Nl/min)	Orifice size (mm)	Working ports size
Filtered air, with or without lubrication	10 bar	-5 - +70	90 Nl/min	mm 2,5	ø4 tube

Palm button 2 position

2/2
3/2

Lateral connections

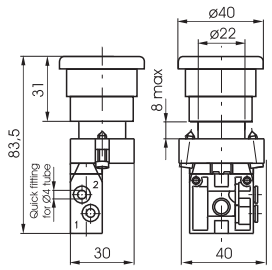

Weight gr. 65
Operating force 19N
Emergency - Rotate to unlock

Ordering code

104.Ⓣ.6.25.ⓅⒻ

	TYPE
Ⓣ	22 = 2 ways
	32 = 3 ways
	CONNECTION TYPE
Ⓟ	L = Lateral
	P = Rear
	FUNCTION
Ⓕ	A = Normally Open
	C = Normally Closed

2/2
3/2

Palm button 2 position

Rear connections

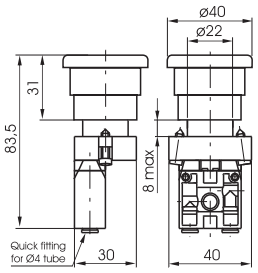

Weight gr. 65
Operating force 19N
Emergency - Rotate to unlock

Operational characteristic

Fluid	Max working pressure (bar)	Temperature °C	Flow rate at 6 bar with Δp=1 (Nl/min)	Orifice size (mm)	Working ports size
Filtered air, with or without lubrication	10 bar	-5 - +70	90 Nl/min	mm 2,5	ø4 tube

Palm button 2 position

5/2

Lateral connections

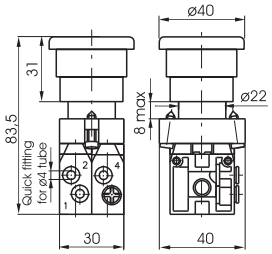

Weight gr. 120
Operating force 32N
Emergency - Rotate to unlock

Ordering code

104.52.6.25.Ⓟ

	CONNECTION TYPE
Ⓟ	L = Lateral
	P = Rear

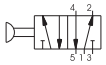

5/2

Palm button 2 position

Rear connections

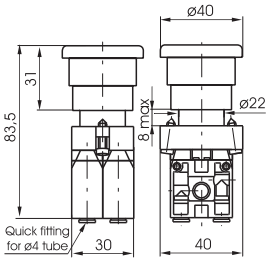

Weight gr. 120
Operating force 32N
Emergency - Rotate to unlock

Operational characteristic

Fluid	Max working pressure (bar)	Temperature °C	Flow rate at 6 bar with Δp=1 (Nl/min)	Orifice size (mm)	Working ports size
Filtered air, with or without lubrication	10 bar	-5 - +70	90 Nl/min	mm 2,5	ø4 tube

1

Switch - short lever

2/2
3/2

Lateral connections

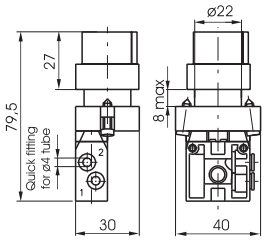

Weight gr. 65
Switch 2 positions stable

Ordering code

104.T.6.30.PF

T	TYPE
	22 = 2 ways
	32 = 3 ways
P	CONNECTION TYPE
	L = Lateral
	P = Rear
F	FUNCTION
	A = Normally Open
	C = Normally Closed

2/2
3/2

Switch - short lever

Rear connections

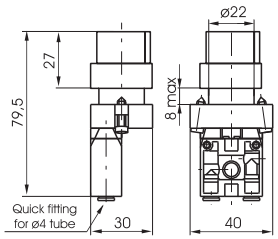

Weight gr. 65
Switch 2 positions stable

Operational characteristic

Fluid	Max working pressure (bar)	Temperature °C	Flow rate at 6 bar ith Δp=1 (Nl/min)	Orifice size (mm)	Working ports size
Filtered air, with or without lubrication	10 bar	-5 - +70	90 Nl/min	mm 2,5	ø4 tube

Switch - short lever

5/2

Lateral connections

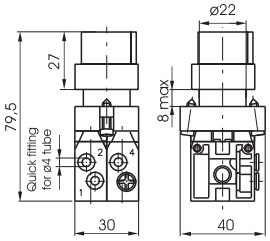

Weight gr. 120
Switch 2 positions stable

Ordering code

104.52.6.30.P

P	CONNECTION TYPE
	L = Lateral
	P = Rear

5/2

Switch - short lever

Rear connections

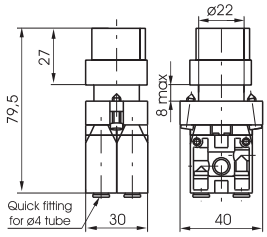

Weight gr. 120
Switch 2 positions stable

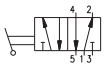

Operational characteristic

Fluid	Max working pressure (bar)	Temperature °C	Flow rate at 6 bar with Δp=1 (Nl/min)	Orifice size (mm)	Working ports size
Filtered air, with or without lubrication	10 bar	-5 - +70	90 Nl/min	mm 2,5	ø4 tube

Switch - short lever

5/3

Lateral connections

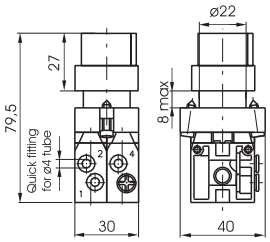

Weight gr. 120

Ordering code

104.53.F.6.30.S.P

F	FUNCTION
	32 = Open centres
	33 = Pressured centres
S	SWITCH POSITIONS
	0 = 3 pos. instable
	1 = 3 pos. stable
P	CONNECTION TYPE
	L = Lateral
	P = Rear

5/3

Switch - short lever

Rear connections

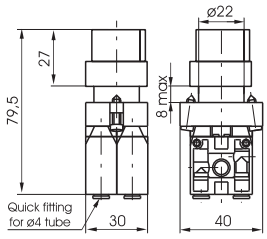

Weight gr. 120

Operational characteristic

Fluid	Max working pressure (bar)	Temperature °C	Flow rate at 6 bar with Δp=1 (Nl/min)	Orifice size (mm)	Working ports size
Filtered air, with or without lubrication	10 bar	-5 - +70	90 Nl/min	mm 2,5	ø4 tube

Switch - long lever

2/2
3/2

Lateral connections

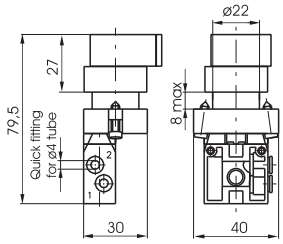

Weight gr. 65
Switch 2 positions stable

Ordering code

104.T.6.27.PF

T	TYPE
	22 = 2 ways
	32 = 3 ways
P	CONNECTION TYPE
	L = Lateral
	P = Rear
F	FUNCTION
	A = Normally Open
	C = Normally Closed

2/2
3/2

Switch - long lever

Rear connections

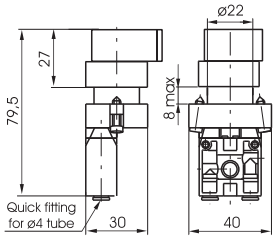

Weight gr. 65
Switch 2 positions stable

Operational characteristic

Fluid	Max working pressure (bar)	Temperature °C	Flow rate at 6 bar with Δp=1 (Nl/min)	Orifice size (mm)	Working ports size
Filtered air, with or without lubrication	10 bar	-5 - +70	90 Nl/min	mm 2,5	ø4 tube

Switch - long lever

5/2

Lateral connections

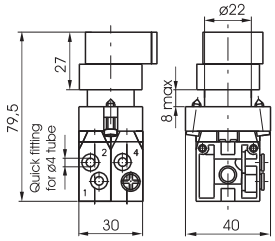

Weight gr. 120
Switch 2 positions stable

Ordering code

104.52.6.27.P

P	CONNECTION TYPE
	L = Lateral
	P = Rear

5/2

Switch - long lever

Rear connections

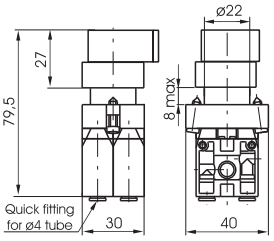

Weight gr. 120
Switch 2 positions stable

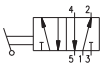

Operational characteristic

Fluid	Max working pressure (bar)	Temperature °C	Flow rate at 6 bar with Δp=1 (Nl/min)	Orifice size (mm)	Working ports size
Filtered air, with or without lubrication	10 bar	-5 - +70	90 Nl/min	mm 2,5	ø4 tube

Switch - long lever

5/3

Lateral connections

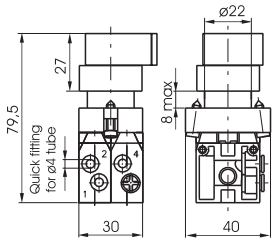

Weight gr. 120
Switch 2 positions stable

Ordering code

104.53.F.6.27.S.P

F	FUNCTION
	32 = Open centres
	33 = Pressured centres
S	SWITCH POSITIONS
	0 = 3 pos. instable
	1 = 3 pos. stable
P	CONNECTION TYPE
	L = Lateral
	P = Rear

5/3

Switch - long lever

Rear connections

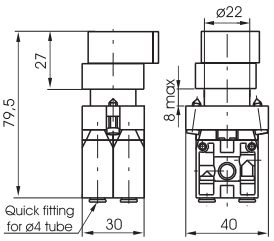

Weight gr. 120
Switch 2 positions stable

Operational characteristic

Fluid	Max working pressure (bar)	Temperature °C	Flow rate at 6 bar with Δp=1 (Nl/min)	Orifice size (mm)	Working ports size
Filtered air, with or without lubrication	10 bar	-5 - +70	90 Nl/min	mm 2,5	ø4 tube

1

Key switch

Lateral connections

2/2
3/2

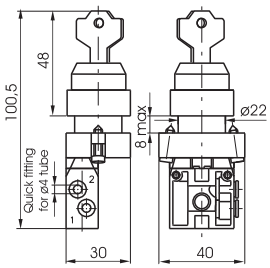

Weight gr. 100
Switch 2 positions stable

Ordering code

104.T.6.28.PF

T	TYPE
	22 = 2 ways
	32 = 3 ways
P	CONNECTION TYPE
	L = Lateral
	P = Rear
F	FUNCTION
	A = Normally Open
	C = Normally Closed

2/2
3/2

Key switch

Rear connections

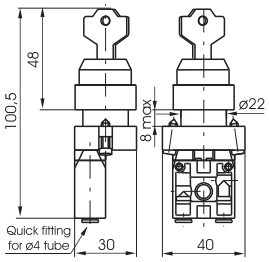

Weight gr. 100
Switch 2 positions stable

Operational characteristic

Fluid	Max working pressure (bar)	Temperature °C	Flow rate at 6 bar with Δp=1 (Nl/min)	Orifice size (mm)	Working ports size
Filtered air, with or without lubrication	10 bar	-5 - +70	90 Nl/min	mm 2,5	ø4 tube

Key switch

Lateral connections

5/2

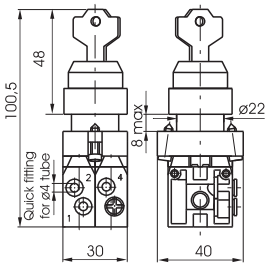

Weight gr. 155
Switch 2 positions stable

Ordering code

104.52.6.28.P

P	CONNECTION TYPE
	L = Lateral
	P = Rear

5/2

Key switch

Rear connections

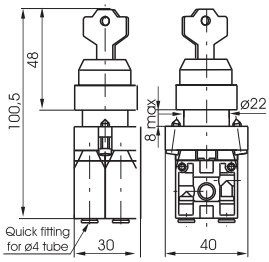

Weight gr. 155
Switch 2 positions stable

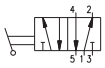

Operational characteristic

Fluid	Max working pressure (bar)	Temperature °C	Flow rate at 6 bar with Δp=1 (Nl/min)	Orifice size (mm)	Working ports size
Filtered air, with or without lubrication	10 bar	-5 - +70	90 Nl/min	mm 2,5	ø4 tube

Key switch

Lateral connections

5/3

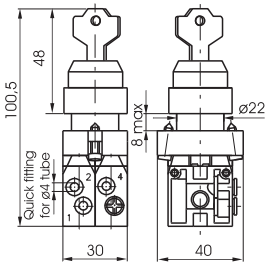

Weight gr. 155
Switch 2 positions stable

Ordering code

104.53.F.6.28.S.P

F	FUNCTION
	32 = Open centres
	33 = Pressured centres
S	SWITCH POSITIONS
	0 = 3 pos. instable
	1 = 3 pos. stable
P	CONNECTION TYPE
	L = Lateral
	P = Rear

5/3

Key switch

Rear connections

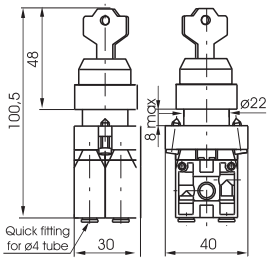

Weight gr. 155
Switch 2 positions stable

Operational characteristic

Fluid	Max working pressure (bar)	Temperature °C	Flow rate at 6 bar with Δp=1 (Nl/min)	Orifice size (mm)	Working ports size
Filtered air, with or without lubrication	10 bar	-5 - +70	90 Nl/min	mm 2,5	ø4 tube

Lever roller - Spring

2/2
3/2

Lateral connections

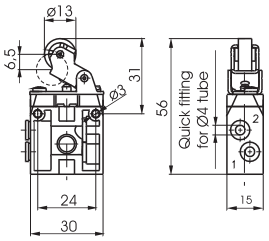

Weight gr. 31
Operating force 9N

Ordering code

104.Ⓣ.2.1.ⓅⒻ

Ⓣ	TYPE
	22 = 2 ways
	32 = 3 ways
Ⓟ	CONNECTION TYPE
	L = Lateral
	P = Rear
Ⓕ	FUNCTION
	A = Normally Open
	C = Normally Closed

2/2
3/2

Lever roller - Spring

Rear connections

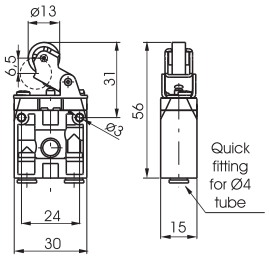

Weight gr. 31
Operating force 9N

Operational characteristic

Fluid	Max working pressure (bar)	Temperature °C	Flow rate at 6 bar with Δp=1 (Nl/min)	Orifice size (mm)	Working ports size
Filtered air, with or without lubrication	10 bar	-5 - +70	90 Nl/min	mm 2,5	ø4 tube

Lever roller ball bearing - Spring

2/2
3/2

Lateral connections

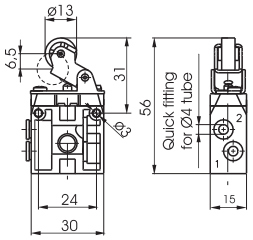

Weight gr. 46
Operating force 9N

Ordering code

104.Ⓣ.2.1/1.ⓅⒻ

Ⓣ	TYPE
	22 = 2 ways
	32 = 3 ways
Ⓟ	CONNECTION TYPE
	L = Lateral
	P = Rear
Ⓕ	FUNCTION
	A = Normally Open
	C = Normally Closed

2/2
3/2

Lever roller ball bearing - Spring

Lateral connections

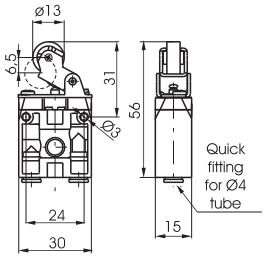

Weight gr. 46
Operating force 9N

Operational characteristic

Fluid	Max working pressure (bar)	Temperature °C	Flow rate at 6 bar with Δp=1 (Nl/min)	Orifice size (mm)	Working ports size
Filtered air, with or without lubrication	10 bar	-5 - +70	90 Nl/min	mm 2,5	ø4 tube

Lever unidirectional - Spring

2/2
3/2

Lateral connections

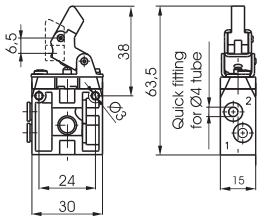

Weight gr. 31
Operating force 9N

Ordering code

104.Ⓣ.3.1ⓅⒻ

Ⓣ	TYPE
	22 = 2 ways
	32 = 3 ways
Ⓟ	CONNECTION TYPE
	L = Lateral
	P = Rear
Ⓕ	FUNCTION
	A = Normally Open
	C = Normally Closed

2/2
3/2

Lever unidirectional - Spring

Lateral connections

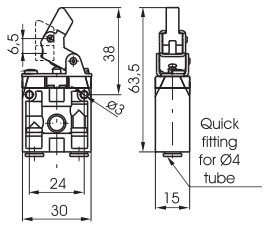

Weight gr. 31
Operating force 9N

Operational characteristic

Fluid	Max working pressure (bar)	Temperature °C	Flow rate at 6 bar with Δp=1 (Nl/min)	Orifice size (mm)	Working ports size
Filtered air, with or without lubrication	10 bar	-5 - +70	90 Nl/min	mm 2,5	ø4 tube

1

Complete lever roller operator

Ordering code

104.2.1

Complete lever roller ball bearing operator

Ordering code

104.2.1/1

Complete lever unidirectional

Ordering code

104.3.1

Fixing plate

Ordering code

104.00

Completewith fixing screws

Push button

Ordering code

104.6.22/Ⓒ

Ⓒ	BUTTON COLOR
	1 = Red
	2 = Black
	3 = Green
	4 = Yellow

Raised Push button

Ordering code

104.6.23/Ⓒ

Ⓒ	BUTTON COLOR
	1 = Red
	2 = Black
	3 = Green
	4 = Yellow

Push button 2 positions

Ordering code

104.6.31

(step - step)

Palm button 2 position

Ordering code

104.6.25

Emergency - Rotate to unlock

Switch - short lever

Ordering code

104.6.30.Ⓢ

Ⓢ	SWITCH POSITIONS
	0 = 3 pos. instable
	1 = 3 pos. stable

Switch 3 positions

Switch - short lever

Ordering code

104.6.30

Switch 2 positions stable

1

Switch - long lever

Ordering code
104.6.27.Ⓢ

Ⓢ	SWITCH POSITIONS
	0 = 3 pos. instable
	1 = 3 pos. stable

Switch 3 positions

Switch - long lever

Ordering code
104.6.27

Switch 2 positions stable

Key switch

Ordering code
104.6.28.Ⓢ

Ⓢ	SWITCH POSITIONS
	0 = 3 pos. instable
	1 = 3 pos. stable

Switch 3 positions

Key switch

Ordering code
104.6.28

Switch 2 positions stable

Joystick selector switch

Ordering code
104.6.39.Ⓢ

Ⓢ	SWITCH POSITIONS
	0 = 3 pos. instable

Complete Pneumatic Operator

Ordering code
104.11

Contact electric element

Ordering code
104.Ⓕ

Ⓕ	FUNCTION
	NA = Normally Open
	NC = Normally Closed

Push button protection cover

Ordering code
104.02

General

The series 105 consist of a broad range of miniature valves and valves with various type of actuation.
The connections are M5 for this series.
Due to their special construction with a balanced spool, these valves can be used interchangeably as 3 ways or 5 ways as can be seen in the functional schematics in section 0. This is important because, for example, the 3 ways can be used normally closed or normally open and the 5 ways can be fed through the exhausts 3 and 5 with different pressures according to the need. The spool, as it is moving, isolates the connections without being effected by the inlet pressure.

Construction characteristics

	M5	**G 1/8" - G 1/4" - G 1/2" - G 1"**
Body	Aluminium	Aluminium
Actuators	Nickel plated brass Stainless steel for roller levers and button levers. Zinc plated steel for side levers Plastic material for handles, buttons, switches	Aluminium
Seals	NBR	NBR
Spacer	Acetal resin	Technopolymer (Aluminium for G 1")
Spool	Stainless steel	Stainless steel / Technopolymer
Bottom plates		Technopolymer
Spring	Spring steel	Spring steel

Use and maintenance

These valves have an average life of 15 million cycles depending on the application and air quality, filtered and lubricated air using specified lubricants will dramatically reduce the wear of the seals and ensures long and trouble free operation.
Please ensure that the valve is being used according with the manufacturers specification, such as air pressure and temperature and that exhaust ports 3 & 5 are protected against the possible ingress of dirt or debris.
Repair kits including the spool complete with seals are available for overhauling the valves; however, although this is a simple operation it should be carried out by a competent person.

ATTENTION: use hydraulic oil class H for lubrication such as MAGNA GC 32 (Castrol).

1

Tappet panel - Spring

3/2

Ordering code

105.Ⓣ.0.1

	TYPE
Ⓣ	32 = 3 ways
	52 = 5 ways

5/2

Tappet panel - Spring

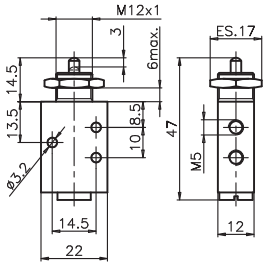

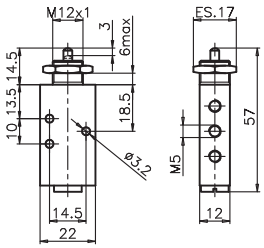

Weight gr. 70
Operating force 14 N

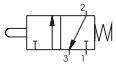

Weight gr. 87
Operating force 14 N

Operational characteristic

Fluid	Max working pressure (bar)	Temperature °C	Flow rate at 6 bar with Δp=1 (Nl/min)	Orifice size (mm)	Working ports size
Filtered and lubricated air	10 bar	-5 - +70	120 Nl/min	mm 2,5	M5

Lever roller - Spring

3/2

Ordering code

105.Ⓣ.2.1

	TYPE
Ⓣ	32 = 3 ways
	52 = 5 ways

5/2

Lever roller - Spring

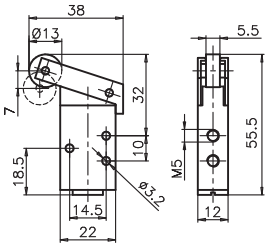

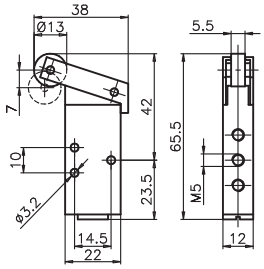

Weight gr. 85
Operating force 6 N

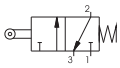

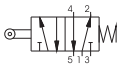

Weight gr. 102
Operating force 6 N

Operational characteristic

Fluid	Max working pressure (bar)	Temperature °C	Flow rate at 6 bar with Δp=1 (Nl/min)	Orifice size (mm)	Working ports size
Filtered and lubricated air	10 bar	-5 - +70	120 Nl/min	mm 2,5	M5

Lever roller ball bearing - Spring

3/2

Ordering code

105.Ⓣ.2.1/1

	TYPE
Ⓣ	32 = 3 ways
	52 = 5 ways

5/2

Lever roller ball bearing - Spring

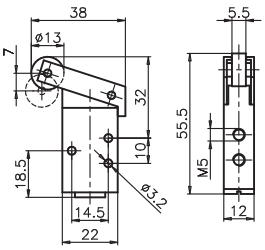

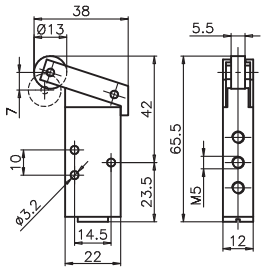

Weight gr. 100
Operating force 6 N

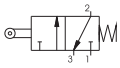

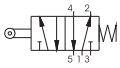

Weight gr. 177
Operating force 6 N

Operational characteristic

Fluid	Max working pressure (bar)	Temperature °C	Flow rate at 6 bar with Δp=1 (Nl/min)	Orifice size (mm)	Working ports size
Filtered and lubricated air	10 bar	-5 - +70	120 Nl/min	mm 2,5	M5

1

Lever button - Spring

3/2

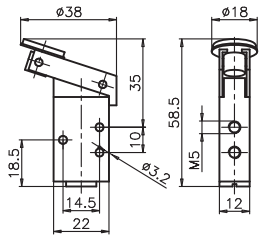

Weight gr. 85
Operating force 6 N

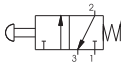

Ordering code

105.Ⓣ.2.6/Ⓒ

Ⓣ	TYPE
	32 = 3 ways
	52 = 5 ways
Ⓒ	BUTTON COLOR
	1 = Red
	2 = Black
	3 = Green

5/2

Lever button - Spring

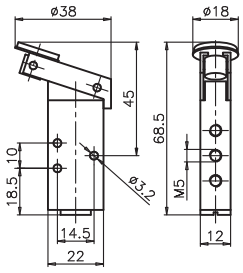

Weight gr. 102
Operating force 6 N

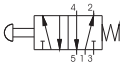

Operational characteristic

Fluid	Max working pressure (bar)	Temperature °C	Flow rate at 6 bar with Δp=1 (Nl/min)	Orifice size (mm)	Working ports size
Filtered and lubricated air	10 bar	-5 - +70	120 Nl/min	mm 2,5	M5

Lever unidirectional - Spring

3/2

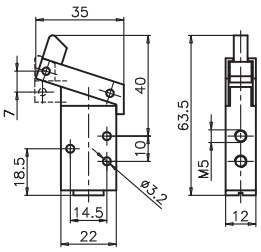

Weight gr. 85
Operating force 6 N

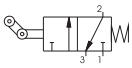

Ordering code

105.Ⓣ.3.1

Ⓣ	TYPE
	32 = 3 ways
	52 = 5 ways

5/2

Lever unidirectional - Spring

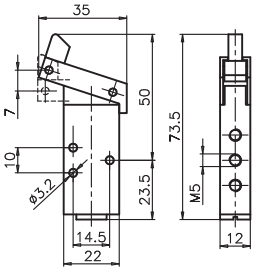

Weight gr. 102
Operating force 6 N

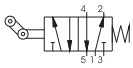

Operational characteristic

Fluid	Max working pressure (bar)	Temperature °C	Flow rate at 6 bar with Δp=1 (Nl/min)	Orifice size (mm)	Working ports size
Filtered and lubricated air	10 bar	-5 - +70	120 Nl/min	mm 2,5	M5

Lever panel Ø22 - 2 positions

3/2

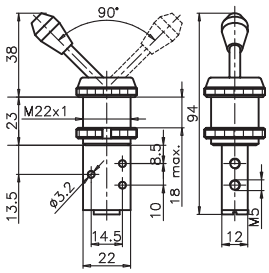

Weight gr. 125

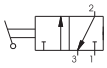

Ordering code

105.Ⓣ.4/Ⓒ

Ⓣ	TYPE
	32 = 3 ways
	52 = 5 ways
Ⓒ	BUTTON COLOR
	1 = Red
	2 = Black
	3 = Green

5/2

Lever panel Ø22 - 2 positions

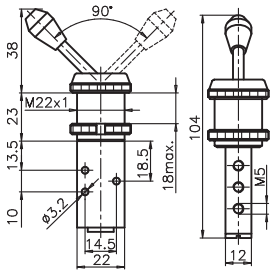

Weight gr. 142

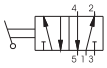

Operational characteristic

Fluid	Max working pressure (bar)	Temperature °C	Flow rate at 6 bar with Δp=1 (Nl/min)	Orifice size (mm)	Working ports size
Filtered and lubricated air	10 bar	-5 - +70	120 Nl/min	mm 2,5	M5

1

Lever panel Ø30 - 2 positions

3/2 | Ordering code | 5/2

105.Ⓣ.5/Ⓒ

Ⓣ	TYPE
	32 = 3 ways
	52 = 5 ways
Ⓒ	BUTTON COLOR
	1 = Red
	2 = Black
	3 = Green

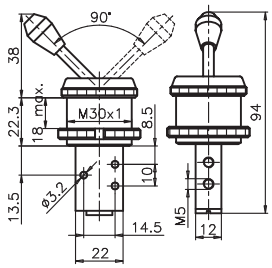

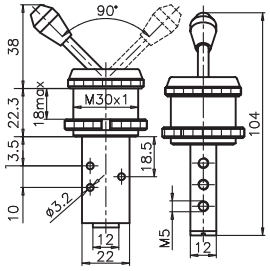

Weight gr. 165

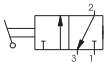

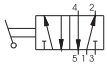

Weight gr. 182

Operational characteristic

Fluid	Max working pressure (bar)	Temperature °C	Flow rate at 6 bar with Δp=1 (Nl/min)	Orifice size (mm)	Working ports size
Filtered and lubricated air	10 bar	-5 - +70	120 Nl/min	mm 2,5	M5

Push button Ø30 - Spring

3/2 | Ordering code | 5/2

105.Ⓣ.6.1/Ⓒ

Ⓣ	TYPE
	32 = 3 ways
	52 = 5 ways
Ⓒ	BUTTON COLOR
	1 = Red
	2 = Black
	3 = Green

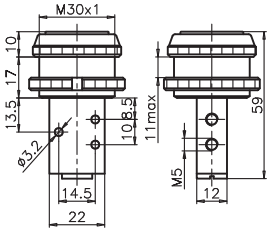

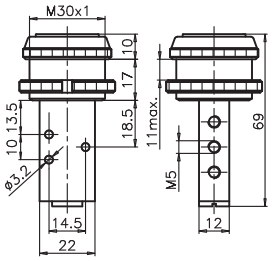

Weight gr. 123
Operating force 14 N

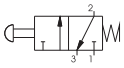

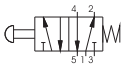

Weight gr. 140
Operating force 14 N

Operational characteristic

Fluid	Max working pressure (bar)	Temperature °C	Flow rate at 6 bar with Δp=1 (Nl/min)	Orifice size (mm)	Working ports size
Filtered and lubricated air	10 bar	-5 - +70	120 Nl/min	mm 2,5	M5

Push button Ø22 - Spring

3/2 | Ordering code | 5/2

105.Ⓣ.6.2/Ⓒ

Ⓣ	TYPE
	32 = 3 ways
	52 = 5 ways
Ⓒ	BUTTON COLOR
	1 = Red
	2 = Black
	3 = Green

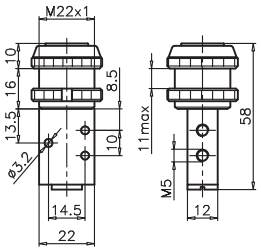

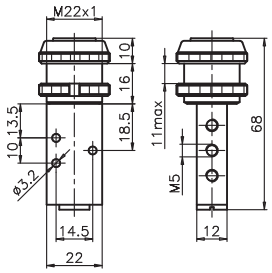

Weight gr. 102
Operating force 14 N

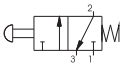

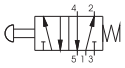

Weight gr. 119
Operating force 14 N

Operational characteristic

Fluid	Max working pressure (bar)	Temperature °C	Flow rate at 6 bar with Δp=1 (Nl/min)	Orifice size (mm)	Working ports size
Filtered and lubricated air	10 bar	-5 - +70	120 Nl/min	mm 2,5	M5

1

Push button - Spring

3/2 | Ordering code | 5/2

105.Ⓣ.6.22/Ⓒ

Ⓣ	TYPE
	32 = 3 ways
	52 = 5 ways
Ⓒ	BUTTON COLOR
	1 = Red
	2 = Black
	3 = Green
	4 = Yellow

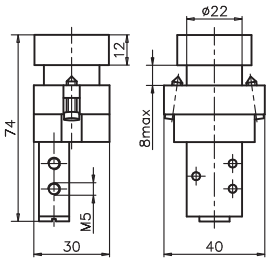

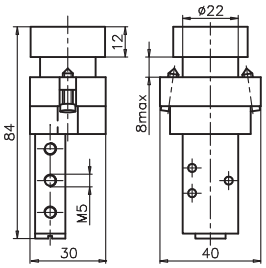

Weight gr. 165
Operating force 14 N

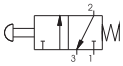

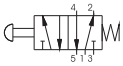

Weight gr. 182
Operating force 14 N

Operational characteristic

Fluid	Max working pressure (bar)	Temperature °C	Flow rate at 6 bar with Δp=1 (Nl/min)	Orifice size (mm)	Working ports size
Filtered and lubricated air	10 bar	-5 - +70	120 Nl/min	mm 2,5	M5

Raised Push button - Spring

3/2 | Ordering code | 5/2

105.Ⓣ.6.23/Ⓒ

Ⓣ	TYPE
	32 = 3 ways
	52 = 5 ways
Ⓒ	BUTTON COLOR
	1 = Red
	2 = Black
	3 = Green
	4 = Yellow

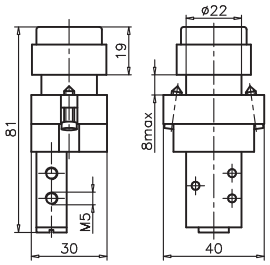

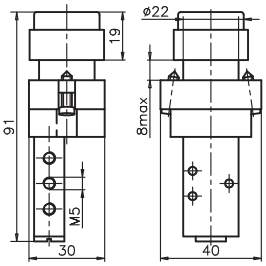

Weight gr. 170
Operating force 14 N

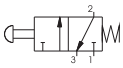

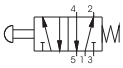

Weight gr. 187
Operating force 14 N

Operational characteristic

Fluid	Max working pressure (bar)	Temperature °C	Flow rate at 6 bar with Δp=1 (Nl/min)	Orifice size (mm)	Working ports size
Filtered and lubricated air	10 bar	-5 - +70	120 Nl/min	mm 2,5	M5

Switch 2 positions

3/2 | Ordering code | 5/2

105.Ⓣ.6.27

Ⓣ	TYPE
	32 = 3 ways
	52 = 5 ways

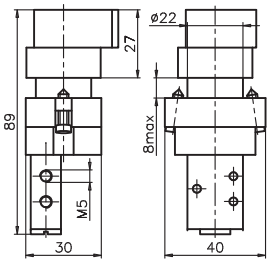

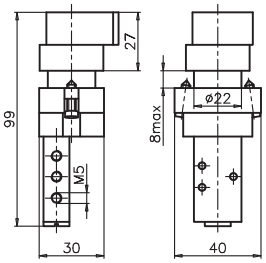

Weight gr. 185

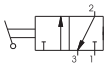

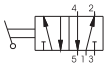

Weight gr. 202

Operational characteristic

Fluid	Max working pressure (bar)	Temperature °C	Flow rate at 6 bar with Δp=1 (Nl/min)	Orifice size (mm)	Working ports size
Filtered and lubricated air	10 bar	-5 - +70	120 Nl/min	mm 2,5	M5

1

Key switch 2 positions

3/2

Ordering code

105.Ⓣ.6.28

Ⓣ	TYPE
	32 = 3 ways
	52 = 5 ways

5/2

Key switch 2 positions

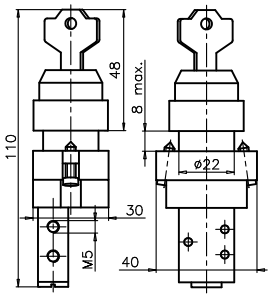

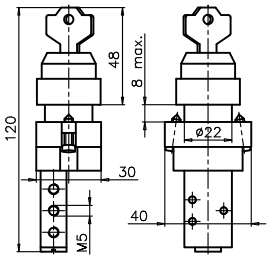

Weight gr. 215

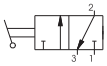

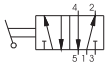

Weight gr. 232

Operational characteristic

Fluid	Max working pressure (bar)	Temperature °C	Flow rate at 6 bar with Δp=1 (Nl/min)	Orifice size (mm)	Working ports size
Filtered and lubricated air	10 bar	-5 - +70	120 Nl/min	mm 2,5	M5

Palm pushbutton Ø30 - Spring

3/2

Ordering code

105.Ⓣ.7.1/Ⓒ

Ⓣ	TYPE
	32 = 3 ways
	52 = 5 ways
Ⓒ	BUTTON COLOR
	1 = Red
	2 = Black
	3 = Green

5/2

Palm pushbutton Ø30 - Spring

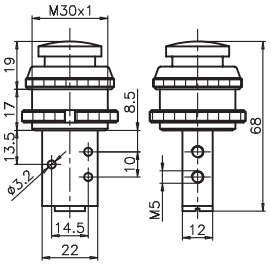

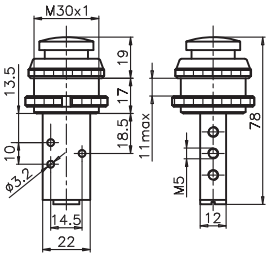

Weight gr. 126
Operating force 14 N

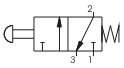

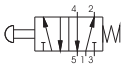

Weight gr. 143
Operating force 14 N

Operational characteristic

Fluid	Max working pressure (bar)	Temperature °C	Flow rate at 6 bar with Δp=1 (Nl/min)	Orifice size (mm)	Working ports size
Filtered and lubricated air	10 bar	-5 - +70	120 Nl/min	mm 2,5	M5

Palm pushbutton Ø22 - Spring

3/2

Ordering code

105.Ⓣ.7.2/Ⓒ

Ⓣ	TYPE
	32 = 3 ways
	52 = 5 ways
Ⓒ	BUTTON COLOR
	1 = Red
	2 = Black
	3 = Green

5/2

Palm pushbutton Ø22 - Spring

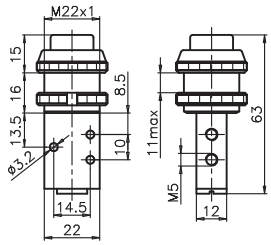

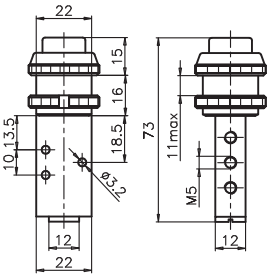

Weight gr. 103
Operating force 14 N

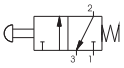

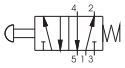

Weight gr. 120
Operating force 14 N

Operational characteristic

Fluid	Max working pressure (bar)	Temperature °C	Flow rate at 6 bar with Δp=1 (Nl/min)	Orifice size (mm)	Working ports size
Filtered and lubricated air	10 bar	-5 - +70	120 Nl/min	mm 2,5	M5

1

Push button - Spring

3/2 | Ordering code | 5/2

105.Ⓣ.8.1/Ⓒ

Ⓣ	TYPE
	32 = 3 ways
	52 = 5 ways
Ⓒ	BUTTON COLOR
	1 = Red
	2 = Black
	3 = Green

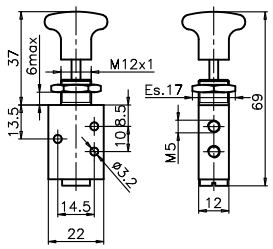

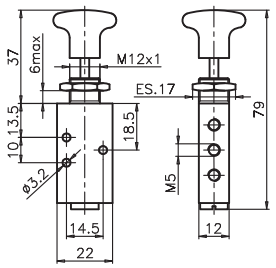

Weight gr. 75
Operating force 14 N

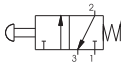

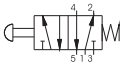

Weight gr. 92
Operating force 14 N

Operational characteristic

Fluid	Max working pressure (bar)	Temperature °C	Flow rate at 6 bar with Δp=1 (Nl/min)	Orifice size (mm)	Working ports size
Filtered and lubricated air	10 bar	-5 - +70	120 Nl/min	mm 2,5	M5

Push button 2 positions

3/2 | Ordering code | 5/2

105.Ⓣ.8/Ⓒ

Ⓣ	TYPE
	32 = 3 ways
	52 = 5 ways
Ⓒ	BUTTON COLOR
	1 = Red
	2 = Black
	3 = Green

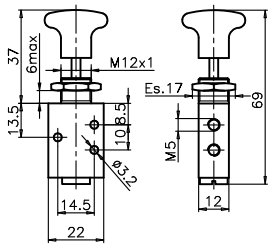

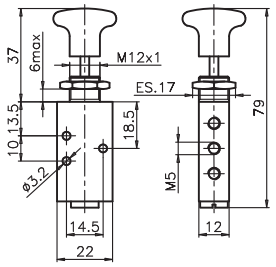

Weight gr. 75
Operating force 14 N

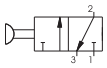

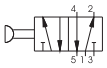

Weight gr. 92
Operating force 14 N

Operational characteristic

Fluid	Max working pressure (bar)	Temperature °C	Flow rate at 6 bar with Δp=1 (Nl/min)	Orifice size (mm)	Working ports size
Filtered and lubricated air	10 bar	-5 - +70	120 Nl/min	mm 2,5	M5

Whisker - Spring

3/2 | Ordering code | 5/2

105.Ⓣ.9.1

Ⓣ	TYPE
	32 = 3 ways
	52 = 5 ways

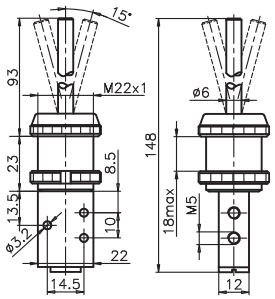

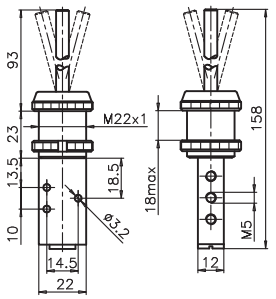

Weight gr. 136

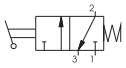

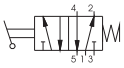

Weight gr. 153

Operational characteristic

Fluid	Max working pressure (bar)	Temperature °C	Flow rate at 6 bar with Δp=1 (Nl/min)	Orifice size (mm)	Working ports size
Filtered and lubricated air	10 bar	-5 - +70	120 Nl/min	mm 2,5	M5

Handle with valve

3/2

Ordering code
105.32.6.40Ⓕ
FUNCTION
Ⓕ A = Normally Open
C = Normally Closed

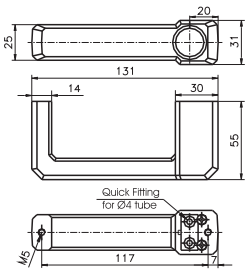

Weight gr. 165
Operating force 14 N

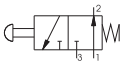

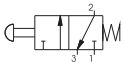

Operational characteristic					
Fluid	Max working pressure (bar)	Temperature °C	Flow rate at 6 bar with Δp=1 (Nl/min)	Orifice size (mm)	Working ports size
Filtered and lubricated air	10 bar	-5 - +70	120 Nl/min	mm 2,5	M5 - Quick Fitting for Ø4 tube

Handle with valve

5/2

Left feeding

Ordering code
105.52.6.Ⓣ
TYPE
Ⓣ 40 = Left feeding
40D = Right feeding

5/2

Handle with valve

Right feeding

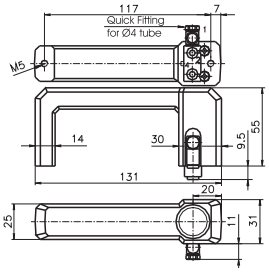

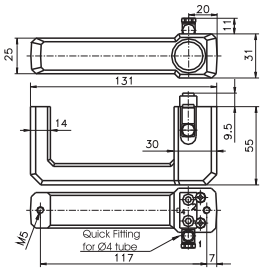

Weight gr. 190
Operating force 14 N

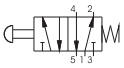

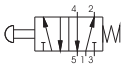

Weight gr. 190
Operating force 14 N

Operational characteristic					
Fluid	Max working pressure (bar)	Temperature °C	Flow rate at 6 bar with Δp=1 (Nl/min)	Orifice size (mm)	Working ports size
Filtered and lubricated air	10 bar	-5 - +70	120 Nl/min	mm 2,5	M5 - Quick Fitting for Ø4 tube

General

The series 200 consist of a broad range of valves with various type of actuation.
The connections for this series are from G 1/8" to G 1".
Due to their special construction with a balanced spool, these valves can be used interchangeably as 3 ways or 5 ways as can be seen in the functional schematics in section 0. This is important because, for example, the 3 ways can be used normally closed or normally open and the 5 ways can be fed through the exhausts 3 and 5 with different pressures according to the need. The spool, as it is moving, isolates the connections without being effected by the inlet pressure.
The main components constituting the valves of the Tecno228 series are manufactured with high performance technopolymer. The use of technopolymer has resulted in a light weight product which can be offered to the market at very interesting prices. This valve series is manufactured with 1/8" connections, 3 and 5 ways function, mechanical or pneumatically operated, monostable spring or pneumatic return, bistable and in 5 ways 3 positions version with closed, open and pressured centres.
This series is completely interchangable with the standard 228 series (with alluminium body).

Construction characteristics

	G 1/8" - G 1/4" - G 1/2" - G 1"	G 1/8" (in Technopolymer T228 Series)
Body	Aluminium	Technopolymer
Actuators	Aluminium Technopolymer	Technopolymer
Spool	Stainless steel Technopolymer	Technopolymer (5/2 version) Nickel plated steel (5/3 version)
Seals	NBR	NBR
Spacers	Technopolymer (Aluminium for G 1")	Technopolymer
Spring	Spring steel	Spring steel
Pistons	Technopolymer	Technopolymer

Maximum fitting torque (for T228 Series)

Thread	Maximum Torque (Nm)
G 1/8"	4

Use and maintenance

These valves have an average life of 15 million cycles depending on the application and air quality, filtered and lubricated air using specified lubricants will dramatically reduce the wear of the seals and ensures long and trouble free operation.
Please ensure that the valve is being used according with the manufacturers specification, such as air pressure and temperature and that exhaust ports 3 & 5 are protected against the possible ingress of dirt or debris.
Repair kits including the spool complete with seals are available for overhauling the valves; however, although this is a simple operation it should be carried out by a competent person.

ATTENTION: use hydraulic oil class H for lubrication such as MAGNA GC 32 (Castrol).

Tappet - Spring

3/2 | Ordering code | 5/2

228.Ⓣ.0.1

Ⓣ	TYPE
	32 = 3 ways
	52 = 5 ways

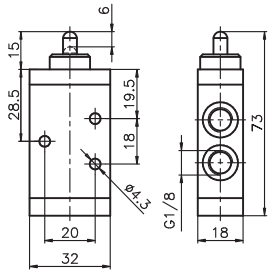

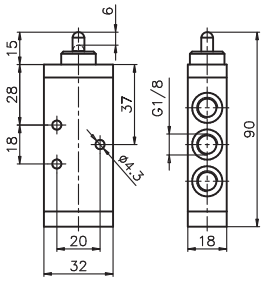

Weight gr. 85
Operating force 33 N

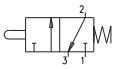

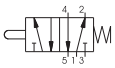

Weight gr. 105
Operating force 33 N

Operational characteristic

Fluid	Max working pressure (bar)	Temperature °C	Flow rate at 6 bar with Δp=1 (Nl/min)	Orifice size (mm)	Working ports size
Filtered and lubricated air	10 bar	-5 - +70	540 Nl/min	mm 6	G 1/8"

Tappet panel - Spring

3/2 | Ordering code | 5/2

228.Ⓣ.1.1

Ⓣ	TYPE
	32 = 3 ways
	52 = 5 ways

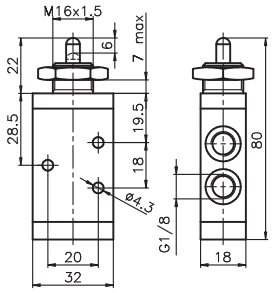

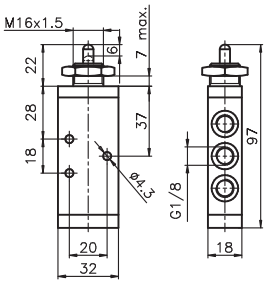

Weight gr. 102
Operating force 33 N

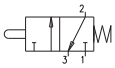

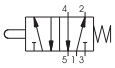

Weight gr. 122
Operating force 33 N

Operational characteristic

Fluid	Max working pressure (bar)	Temperature °C	Flow rate at 6 bar with Δp=1 (Nl/min)	Orifice size (mm)	Working ports size
Filtered and lubricated air	10 bar	-5 - +70	540 Nl/min	mm 6	G 1/8"

Lever roller - Spring

3/2 | Ordering code | 5/2

228.Ⓣ.2.Ⓥ

Ⓣ	TYPE
	32 = 3 ways
	52 = 5 ways
Ⓥ	VERSION
	1 = Plastic roller
	1/2 = Metal roller

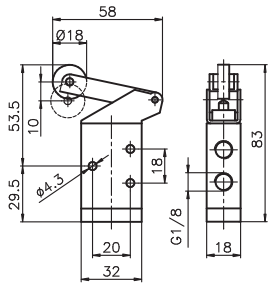

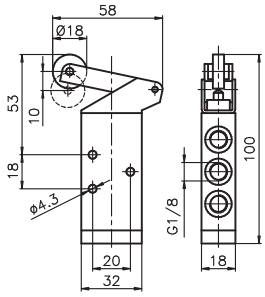

Weight gr. 115
Operating force 15 N

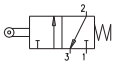

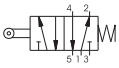

Weight gr. 135
Operating force 15 N

Operational characteristic

Fluid	Max working pressure (bar)	Temperature °C	Flow rate at 6 bar with Δp=1 (Nl/min)	Orifice size (mm)	Working ports size
Filtered and lubricated air	10 bar	-5 - +70	540 Nl/min	mm 6	G 1/8"

1

Lever roller ball bearing - Spring

3/2 | Ordering code | 5/2

228.Ⓣ.2.1/1

Ⓣ	TYPE
	32 = 3 ways
	52 = 5 ways

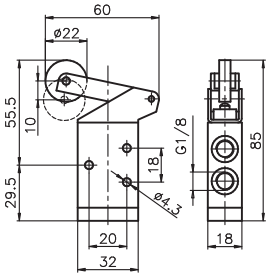

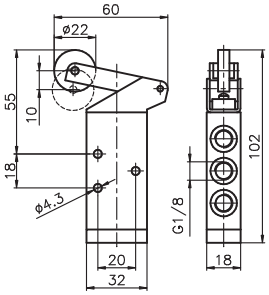

Lever roller ball bearing - Spring

Weight gr. 130
Operating force 15 N

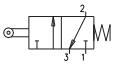

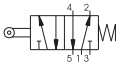

Weight gr. 150
Operating force 15 N

Operational characteristic

Fluid	Max working pressure (bar)	Temperature °C	Flow rate at 6 bar with Δp=1 (Nl/min)	Orifice size (mm)	Working ports size
Filtered and lubricated air	10 bar	-5 - +70	540 Nl/min	mm 6	G 1/8"

Lever button - Spring

3/2 | Ordering code | 5/2

228.Ⓣ.2.6/Ⓒ

Ⓣ	TYPE
	32 = 3 ways
	52 = 5 ways
Ⓒ	BUTTON COLOR
	1 = Red
	2 = Black
	3 = Green

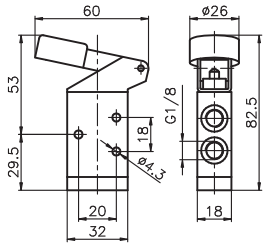

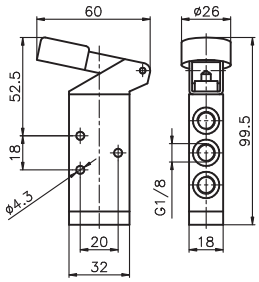

Lever button - Spring

Weight gr. 120
Operating force 15 N

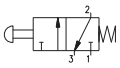

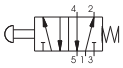

Weight gr. 120
Operating force 15 N

Operational characteristic

Fluid	Max working pressure (bar)	Temperature °C	Flow rate at 6 bar with Δp=1 (Nl/min)	Orifice size (mm)	Working ports size
Filtered and lubricated air	10 bar	-5 - +70	540 Nl/min	mm 6	G 1/8"

Switch lateral 2 positions

3/2 | Ordering code | 5/2

228.Ⓣ.27

Ⓣ	TYPE
	32 = 3 ways
	52 = 5 ways

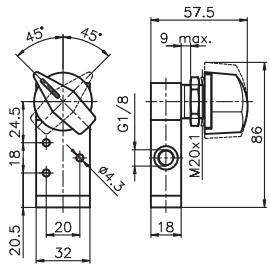

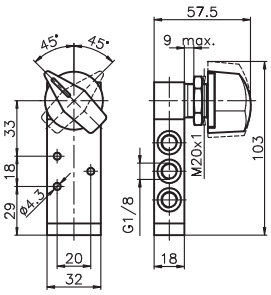

Switch lateral 2 positions

Weight gr. 190

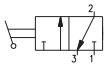

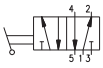

Weight gr. 210

Operational characteristic

Fluid	Max working pressure (bar)	Temperature °C	Flow rate at 6 bar with Δp=1 (Nl/min)	Orifice size (mm)	Working ports size
Filtered and lubricated air	10 bar	-5 - +70	540 Nl/min	mm 6	G 1/8"

1

Lever roller unidirectional - Spring

3/2

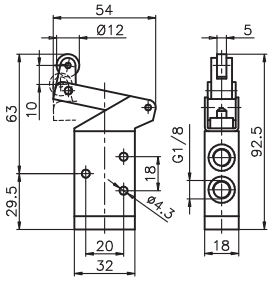

Weight gr. 110

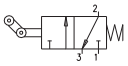

Ordering code

228.Ⓣ.3.Ⓥ

Ⓣ	TYPE
	32 = 3 ways
	52 = 5 ways
Ⓥ	VERSION
	1 = Plastic roller
	1/2 = Metal roller

5/2

Lever roller unidirectional - Spring

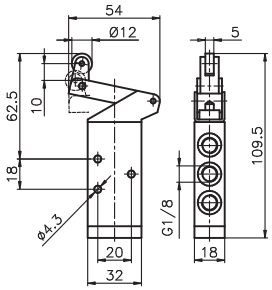

Weight gr. 130

Operational characteristic

Fluid	Max working pressure (bar)	Temperature °C	Flow rate at 6 bar with Δp=1 (Nl/min)	Orifice size (mm)	Working ports size
Filtered and lubricated air	10 bar	-5 - +70	540 Nl/min	mm 6	G 1/8"

Lever roller lateral bidirectional - Spring

3/2

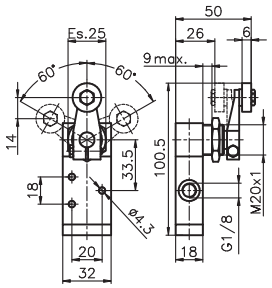

Weight gr. 180

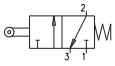

Ordering code

228.Ⓣ.4.1

Ⓣ	TYPE
	32 = 3 ways
	52 = 5 ways

5/2

Lever roller lateral bidirectional - Spring

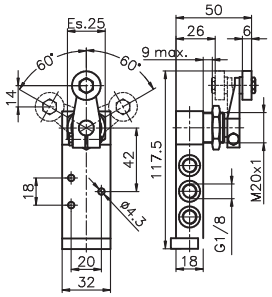

Weight gr. 200

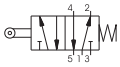

Operational characteristic

Fluid	Max working pressure (bar)	Temperature °C	Flow rate at 6 bar with Δp=1 (Nl/min)	Orifice size (mm)	Working ports size
Filtered and lubricated air	10 bar	-5 - +70	540 Nl/min	mm 6	G 1/8"

Lever sensitive - differential

3/2

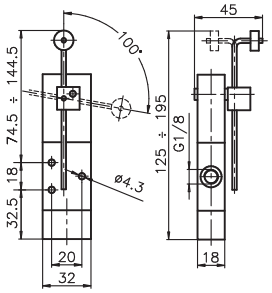

Weight gr. 200
Minimum rotation angle 11°
Minimum working pressure 2,5 bar

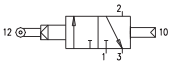

Ordering code

228.Ⓣ.4.13

Ⓣ	TYPE
	32 = 3 ways
	52 = 5 ways

5/2

Lever sensitive - differential

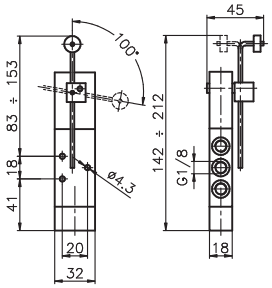

Weight gr. 220
Minimum rotation angle 11°
Minimum working pressure 2,5 bar

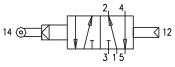

Operational characteristic

Fluid	Max working pressure (bar)	Temperature °C	Flow rate at 6 bar with Δp=1 (Nl/min)	Orifice size (mm)	Working ports size
Filtered and lubricated air	10 bar	-5 - +70	540 Nl/min	mm 6	G 1/8"

1

Lever panel Ø30 - 2 positions

3/2

Ordering code

228.Ⓣ.5/Ⓒ

Ⓣ	TYPE
	32 = 3 ways
	52 = 5 ways
Ⓒ	BUTTON COLOR
	1 = Red
	2 = Black
	3 = Green

5/2

Lever panel Ø30 - 2 positions

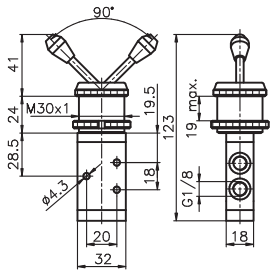

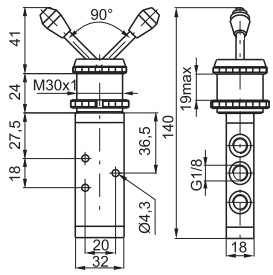

Weight gr. 198

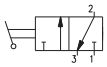

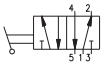

Weight gr. 218

Operational characteristic

Fluid	Max working pressure (bar)	Temperature °C	Flow rate at 6 bar with Δp=1 (Nl/min)	Orifice size (mm)	Working ports size
Filtered and lubricated air	10 bar	-5 - +70	540 Nl/min	mm 6	G 1/8"

Lever front - 2 positions

3/2

Ordering code

228.Ⓣ.55/Ⓒ

Ⓣ	TYPE
	32 = 3 ways
	52 = 5 ways
Ⓒ	BUTTON COLOR
	1 = Red
	2 = Black
	3 = Green

5/2

Lever front - 2 positions

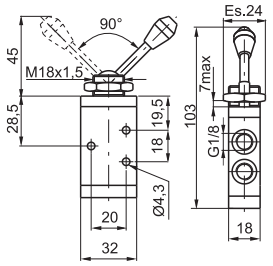

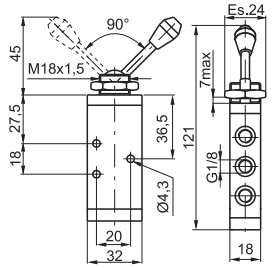

Weight gr. 115

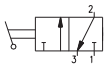

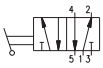

Weight gr. 135

Operational characteristic

Fluid	Max working pressure (bar)	Temperature °C	Flow rate at 6 bar with Δp=1 (Nl/min)	Orifice size (mm)	Working ports size
Filtered and lubricated air	10 bar	-5 - +70	540 Nl/min	mm 6	G 1/8"

Push button Ø30 - Spring

3/2

Ordering code

228.Ⓣ.6.1/Ⓒ

Ⓣ	TYPE
	32 = 3 ways
	52 = 5 ways
Ⓒ	BUTTON COLOR
	1 = Red
	2 = Black
	3 = Green

5/2

Push button Ø30 - Spring

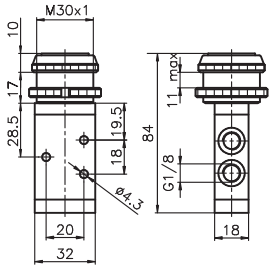

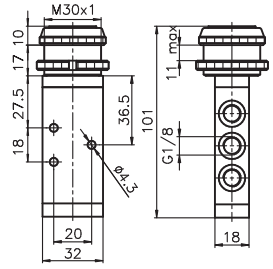

Weight gr. 155
Operating force 33 N

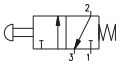

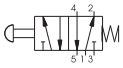

Weight gr. 175
Operating force 33 N

Operational characteristic

Fluid	Max working pressure (bar)	Temperature °C	Flow rate at 6 bar with Δp=1 (Nl/min)	Orifice size (mm)	Working ports size
Filtered and lubricated air	10 bar	-5 - +70	540 Nl/min	mm 6	G 1/8"

1

Sensitive pushbutton Ø30 - differential

3/2 | Ordering code | 5/2

228.Ⓣ.6.13/Ⓒ

Ⓣ	TYPE
	32 = 3 ways
	52 = 5 ways
Ⓒ	BUTTON COLOR
	1 = Red
	2 = Black
	3 = Green

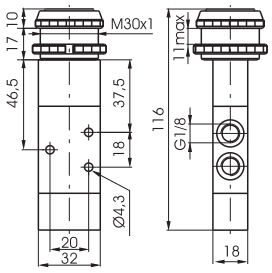

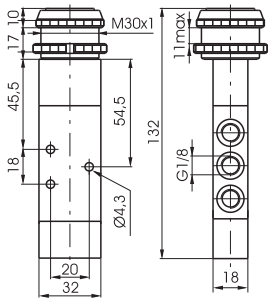

Weight gr. 197
Operating force 18,5N (at 6 bar)

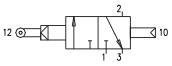

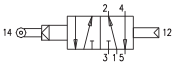

Weight gr. 217
Operating force 18,5N (at 6 bar)

Operational characteristic

Fluid	Max working pressure (bar)	Temperature °C	Flow rate at 6 bar with Δp=1 (Nl/min)	Orifice size (mm)	Working ports size
Filtered and lubricated air	10 bar	-5 - +70	540 Nl/min	mm 6	G 1/8"

Push button - Spring

3/2 | Ordering code | 5/2

228.Ⓣ.6.22/Ⓒ

Ⓣ	TYPE
	32 = 3 ways
	52 = 5 ways
Ⓒ	BUTTON COLOR
	1 = Red
	2 = Black
	3 = Green
	4 = Yellow

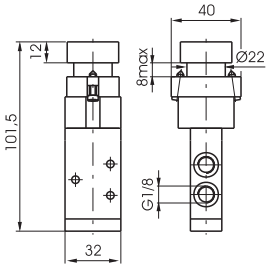

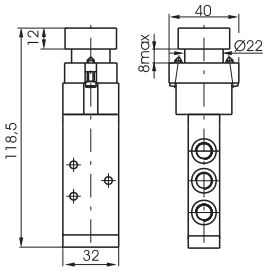

Weight gr. 225
Operating force 33N

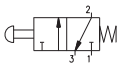

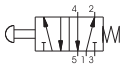

Weight gr. 245
Operating force 33N

Operational characteristic

Fluid	Max working pressure (bar)	Temperature °C	Flow rate at 6 bar with Δp=1 (Nl/min)	Orifice size (mm)	Working ports size
Filtered and lubricated air	10 bar	-5 - +70	540 Nl/min	mm 6	G 1/8"

Raised pushbutton Ø22 - Spring

3/2 | Ordering code | 5/2

228.Ⓣ.6.23/Ⓒ

Ⓣ	TYPE
	32 = 3 ways
	52 = 5 ways
Ⓒ	BUTTON COLOR
	1 = Red
	2 = Black
	3 = Green
	4 = Yellow

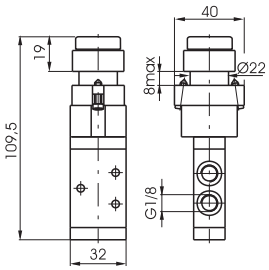

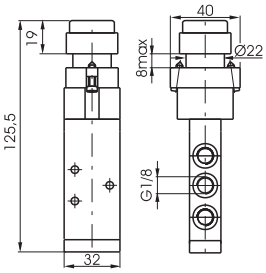

Weight gr. 230
Operating force 33N

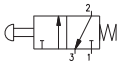

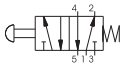

Weight gr. 250
Operating force 33N

Operational characteristic

Fluid	Max working pressure (bar)	Temperature °C	Flow rate at 6 bar with Δp=1 (Nl/min)	Orifice size (mm)	Working ports size
Filtered and lubricated air	10 bar	-5 - +70	540 Nl/min	mm 6	G 1/8"

1

Push button Ø22 - 2 positions

3/2 | Ordering code | 5/2

228.Ⓣ.6.25

Ⓣ	TYPE
	32 = 3 ways
	52 = 5 ways

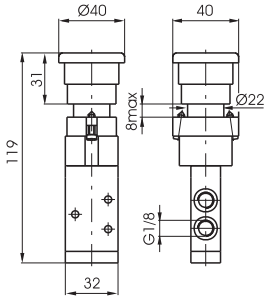

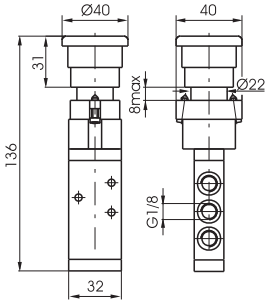

Weight gr. 235
Operating force 33N
Emergency - Rotate to unlock

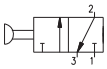

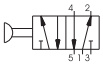

Weight gr. 235
Operating force 33N
Emergency - Rotate to unlock

Operational characteristic

Fluid	Max working pressure (bar)	Temperature °C	Flow rate at 6 bar with Δp=1 (Nl/min)	Orifice size (mm)	Working ports size
Filtered and lubricated air	10 bar	-5 - +70	540 Nl/min	mm 6	G 1/8"

Switch 2 positions

3/2 | Ordering code | 5/2

228.Ⓣ.6.27

Ⓣ	TYPE
	32 = 3 ways
	52 = 5 ways

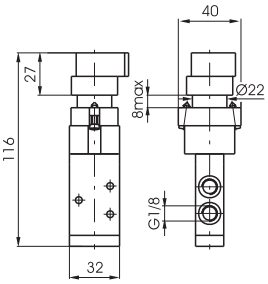

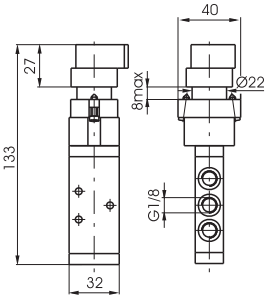

Weight gr. 230

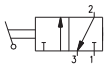

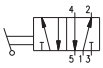

Weight gr. 250

Operational characteristic

Fluid	Max working pressure (bar)	Temperature °C	Flow rate at 6 bar with Δp=1 (Nl/min)	Orifice size (mm)	Working ports size
Filtered and lubricated air	10 bar	-5 - +70	540 Nl/min	mm 6	G 1/8"

Key switch 2 positions

3/2 | Ordering code | 5/2

228.Ⓣ.6.28

Ⓣ	TYPE
	32 = 3 ways
	52 = 5 ways

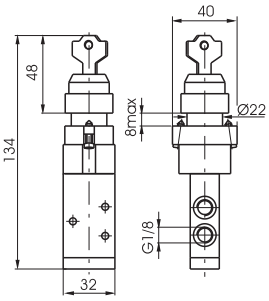

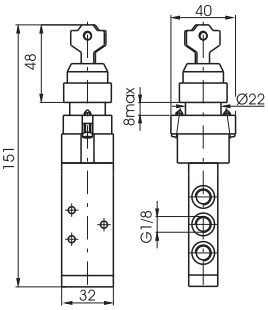

Weight gr. 230

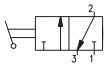

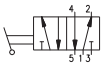

Weight gr. 250

Operational characteristic

Fluid	Max working pressure (bar)	Temperature °C	Flow rate at 6 bar with Δp=1 (Nl/min)	Orifice size (mm)	Working ports size
Filtered and lubricated air	10 bar	-5 - +70	540 Nl/min	mm 6	G 1/8"

1

Palm pushbutton Ø30 2 positions

3/2

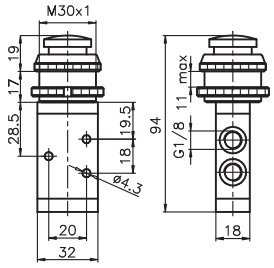

Weight gr. 148
Operating force 33N

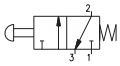

Ordering code

228.Ⓣ.7.1/Ⓒ

Ⓣ	TYPE
	32 = 3 ways
	52 = 5 ways
Ⓒ	BUTTON COLOR
	1 = Red
	2 = Black
	3 = Green

5/2

Palm pushbutton Ø30 2 positions

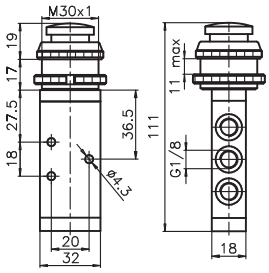

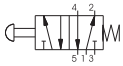

Weight gr. 168
Operating force 33N

Operational characteristic

Fluid	Max working pressure (bar)	Temperature °C	Flow rate at 6 bar with Δp=1 (Nl/min)	Orifice size (mm)	Working ports size
Filtered and lubricated air	10 bar	-5 - +70	540 Nl/min	mm 6	G 1/8"

Push button - Spring

3/2

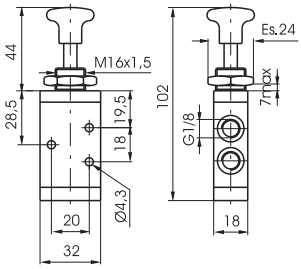

Weight gr. 120
Operating force 33N

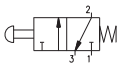

Ordering code

228.Ⓣ.8.1/Ⓒ

Ⓣ	TYPE
	32 = 3 ways
	52 = 5 ways
Ⓒ	BUTTON COLOR
	1 = Red
	2 = Black
	3 = Green

5/2

Push button - Spring

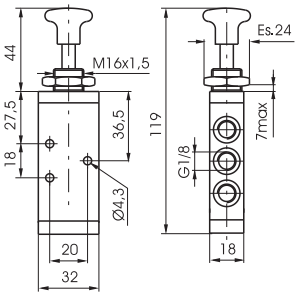

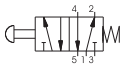

Weight gr. 140
Operating force 33N

Operational characteristic

Fluid	Max working pressure (bar)	Temperature °C	Flow rate at 6 bar with Δp=1 (Nl/min)	Orifice size (mm)	Working ports size
Filtered and lubricated air	10 bar	-5 - +70	540 Nl/min	mm 6	G 1/8"

Push button 2 positions

3/2

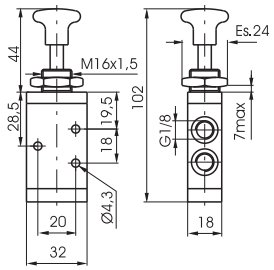

Weight gr. 120
Operating force 10N

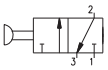

Ordering code

228.Ⓣ.8/Ⓒ

Ⓣ	TYPE
	32 = 3 ways
	52 = 5 ways
Ⓒ	BUTTON COLOR
	1 = Red
	2 = Black
	3 = Green

5/2

Push button 2 positions

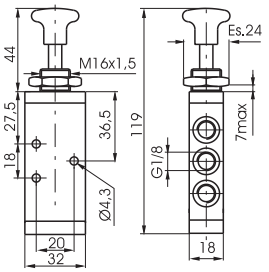

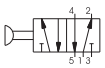

Weight gr. 140
Operating force 10N

Operational characteristic

Fluid	Max working pressure (bar)	Temperature °C	Flow rate at 6 bar with Δp=1 (Nl/min)	Orifice size (mm)	Working ports size
Filtered and lubricated air	10 bar	-5 - +70	540 Nl/min	mm 6	G 1/8"

1

Lever lateral - Spring

3/2

Ordering code

228.Ⓣ.9.1/Ⓒ

Ⓣ	TYPE
	32 = 3 ways
	52 = 5 ways
Ⓒ	BUTTON COLOR
	1 = Red
	2 = Black
	3 = Green

5/2

Lever lateral - Spring

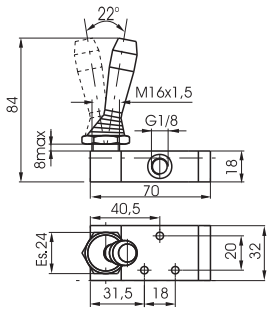

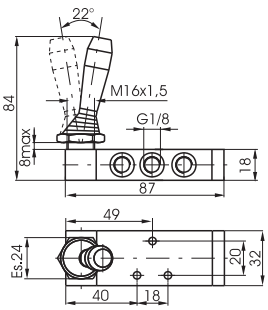

Weight gr. 140

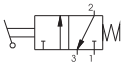

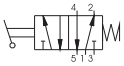

Weight gr. 160

Operational characteristic

Fluid	Max working pressure (bar)	Temperature °C	Flow rate at 6 bar with Δp=1 (Nl/min)	Orifice size (mm)	Working ports size
Filtered and lubricated air	10 bar	-5 - +70	540 Nl/min	mm 6	G 1/8"

Lever lateral 2 positions

3/2

Ordering code

228.Ⓣ.9/Ⓒ

Ⓣ	TYPE
	32 = 3 ways
	52 = 5 ways
Ⓒ	BUTTON COLOR
	1 = Red
	2 = Black
	3 = Green

5/2

Lever lateral 2 positions

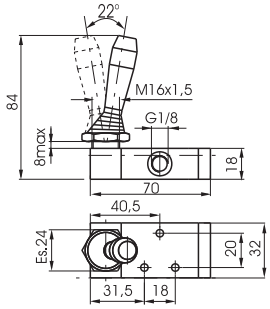

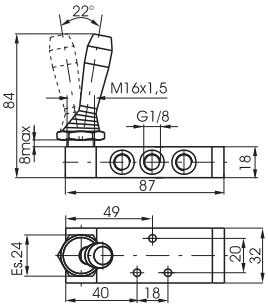

Weight gr. 140

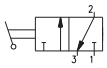

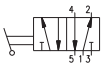

Weight gr. 160

Operational characteristic

Fluid	Max working pressure (bar)	Temperature °C	Flow rate at 6 bar with Δp=1 (Nl/min)	Orifice size (mm)	Working ports size
Filtered and lubricated air	10 bar	-5 - +70	540 Nl/min	mm 6	G 1/8"

Pedal aluminium 2 positions

3/2
5/2

Ordering code

228.Ⓣ.10

Ⓣ	TYPE
	32 = 3 ways
	52 = 5 ways

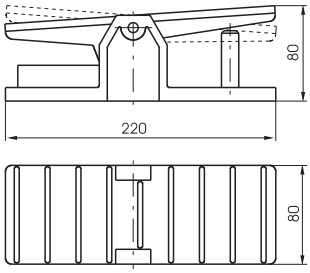

Weight gr. 790 (3/2)
Weight gr. 810 (5/2)

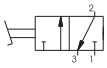

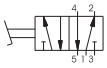

Operational characteristic

Fluid	Max working pressure (bar)	Temperature °C	Flow rate at 6 bar with Δp=1 (Nl/min)	Orifice size (mm)	Working ports size
Filtered and lubricated air	10 bar	-5 - +70	540 Nl/min	mm 6	G 1/8"

1

Pedal aluminium - Spring

Ordering code	
228.Ⓣ.10.1	
Ⓣ	TYPE
	32 = 3 ways
	52 = 5 ways

Weight gr. 790 (3/2)
Weight gr. 810 (5/2)

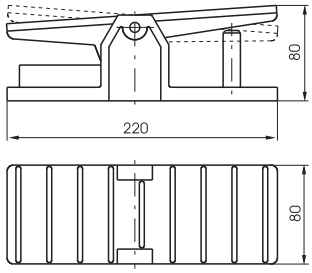

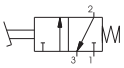

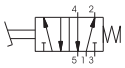

Operational characteristic

Fluid	Max working pressure (bar)	Temperature °C	Flow rate at 6 bar with Δp=1 (Nl/min)	Orifice size (mm)	Working ports size
Filtered and lubricated air	10 bar	-5 - +70	540 Nl/min	mm 6	G 1/8"

Pedal protected - Spring

Ordering code	
228.Ⓣ.10.Ⓥ	
Ⓣ	TYPE
	32 = 3 ways
	52 = 5 ways
Ⓥ	VERSION
	1/1 = Standard version
	2/1 = without safety device

Weight gr. 1.120

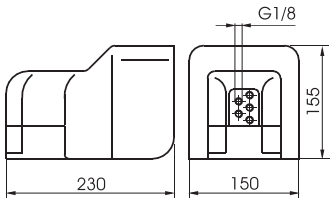

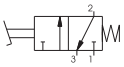

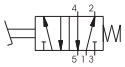

Operational characteristic

Fluid	Max working pressure (bar)	Temperature °C	Flow rate at 6 bar with Δp=1 (Nl/min)	Orifice size (mm)	Working ports size
Filtered and lubricated air	10 bar	-5 - +70	540 Nl/min	mm 6	G 1/8"

Pedal protected 2 positions

Ordering code	
228.Ⓣ.10/1	
Ⓣ	TYPE
	32 = 3 ways
	52 = 5 ways

Weight gr. 1.120

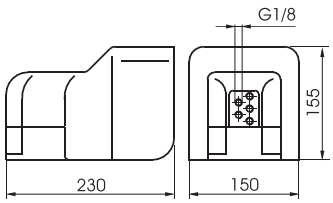

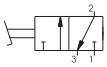

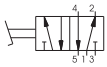

Operational characteristic

Fluid	Max working pressure (bar)	Temperature °C	Flow rate at 6 bar with Δp=1 (Nl/min)	Orifice size (mm)	Working ports size
Filtered and lubricated air	10 bar	-5 - +70	540 Nl/min	mm 6	G 1/8"

Pedal plastic miniaturized - Spring

Ordering code	
228.52.10.Ⓕ	
Ⓕ	FUNCTION
	1P = Standard version
	1PX = Stainless steel spool

Weight gr. 230

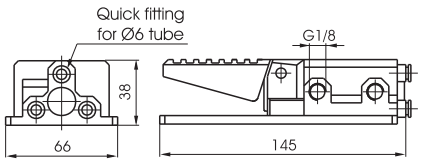

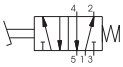

Operational characteristic

Fluid	Max working pressure (bar)	Temperature °C	Flow rate at 6 bar with Δp=1 (Nl/min)	Orifice size (mm)	Working ports size
Filtered and lubricated air	10 bar	-5 - +70	540 Nl/min	mm 6	G 1/8"

1

Lever lateral spring centre 3 positions

Ordering code	
228.53.Ⓕ.9.1/Ⓒ	
Ⓕ	FUNCTION
	31 = Closed centres
	32 = Open centres
Ⓒ	BUTTON COLOR
	1 = Red
	2 = Black
	3 = Green

Weight gr. 190

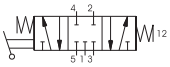

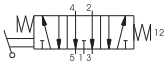

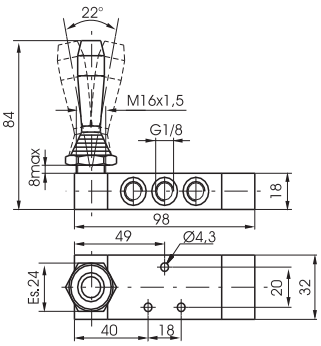

Operational characteristic

Fluid	Max working pressure (bar)	Temperature °C	Flow rate at 6 bar with Δp=1 (Nl/min)	Orifice size (mm)	Working ports size
Filtered and lubricated air	10 bar	-5 - +70	410 Nl/min	mm 6	G 1/8"

Lever lateral 3 positions detent

Ordering code	
228.53.Ⓕ.9/Ⓒ	
Ⓕ	FUNCTION
	31 = Closed centres
	32 = Open centres
Ⓒ	BUTTON COLOR
	1 = Red
	2 = Black
	3 = Green

Weight gr. 160

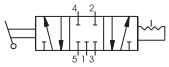

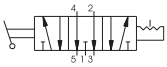

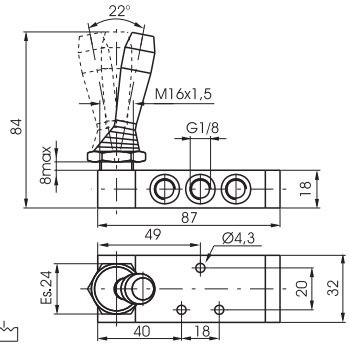

Operational characteristic

Fluid	Max working pressure (bar)	Temperature °C	Flow rate at 6 bar with Δp=1 (Nl/min)	Orifice size (mm)	Working ports size
Filtered and lubricated air	10 bar	-5 - +70	410 Nl/min	mm 6	G 1/8"

Lever central (spring 3 pos.) Operator, Levar, Spole in Technopolymer

Ordering code	
228.53.32.99P/Ⓒ	
Ⓒ	LEVER COLOR
	1 = Red
	2 = Black

Weight gr. 140

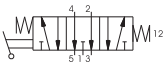

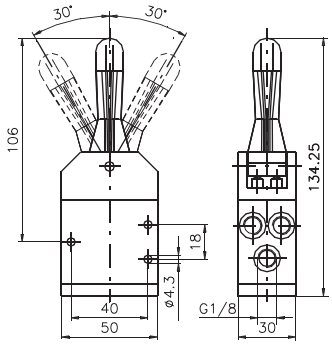

Operational characteristic

Fluid	Max working pressure (bar)	Temperature °C	Flow rate at 6 bar with Δp=1 (Nl/min)	Orifice size (mm)	Working ports size
Filtered and lubricated air	10	-5 - +70	410	6	G 1/8"

Lever central (spring 3 pos.) Levar in Technopolymer

Ordering code	
228.53.32.99/Ⓒ	
Ⓒ	LEVER COLOR
	1 = Red
	2 = Black

Weight gr. 140

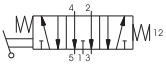

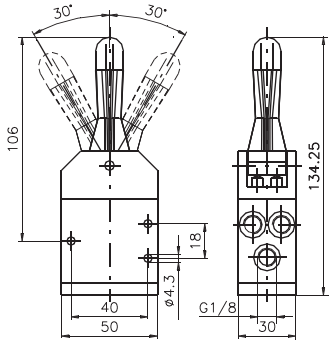

Operational characteristic

Fluid	Max working pressure (bar)	Temperature °C	Flow rate at 6 bar with Δp=1 (Nl/min)	Orifice size (mm)	Working ports size
Filtered and lubricated air	10	-5 - +70	410	6	G 1/8"

1

Lever central Metal (spring 3 pos.) One position stable

5/3

Ordering code

228.53.32.99/ⒸS

Ⓒ	LEVER COLOR
	1 = Red
	2 = Black

Weight gr. 140

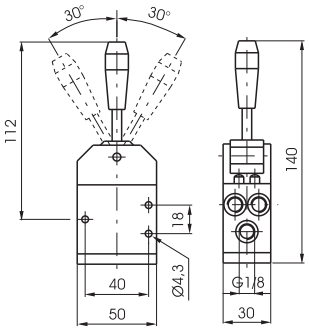

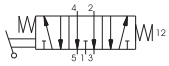

Operational characteristic

Fluid	Max working pressure (bar)	Temperature °C	Flow rate at 6 bar with Δp=1 (Nl/min)	Orifice size (mm)	Working ports size
Filtered and lubricated air	10	-5 - +70	410	6	G 1/8"

Lever central Metal

5/3

Ordering code

228.53.32.99.Ⓕ/Ⓒ

Ⓕ	FUNCTION
	2 = 2 Stable positions
	3 = 3 Stable positions
Ⓒ	LEVER COLOR
	1 = Red
	2 = Black

Weight gr. 140

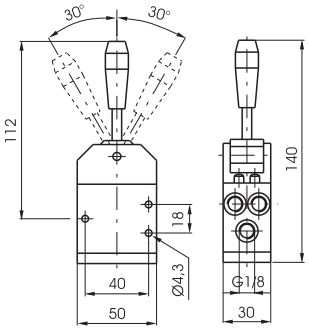

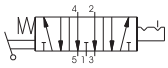

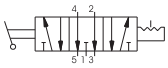

Operational characteristic

Fluid	Max working pressure (bar)	Temperature °C	Flow rate at 6 bar with Δp=1 (Nl/min)	Orifice size (mm)	Working ports size
Filtered and lubricated air	10	-5 - +70	410	6	G 1/8"

Pedal - Spring 3 positions

5/3

Ordering code

228.53.Ⓕ.10.1

Ⓕ	FUNCTION
	31 = Closed centres
	32 = Open centres

Weight gr. 810

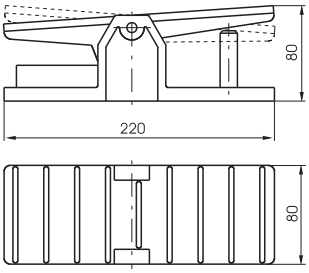

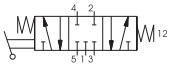

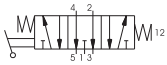

Operational characteristic

Fluid	Max working pressure (bar)	Temperature °C	Flow rate at 6 bar with Δp=1 (Nl/min)	Orifice size (mm)	Working ports size
Filtered and lubricated air	10 bar	-5 - +70	410 Nl/min	mm 6	G 1/8"

1

Plunger - Spring

3/2 | Ordering code | 5/2

T228.Ⓣ.0.1

Ⓣ	TYPE
	32 = 3 ways
	52 = 5 ways

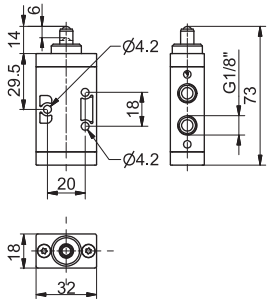

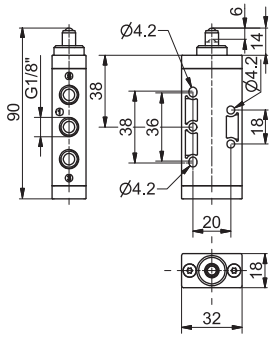

Plunger - Spring

Weight gr. 60
Operating force 33 N

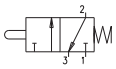

Weight gr. 72
Operating force 33 N

Operational characteristic

Fluid	Max working pressure (bar)	Temperature °C	Flow rate at 6 bar with Δp=1 (Nl/min)	Orifice size (mm)	Working ports size
Filtered and lubricated air	10 bar	Min. Max.	620 Nl/min	mm 6	G 1/8"

Plunger - Spring

for panel mounting

3/2 | Ordering code | 5/2

T228.Ⓣ.1.1

Ⓣ	TYPE
	32 = 3 ways
	52 = 5 ways

Plunger - Spring

for panel mounting

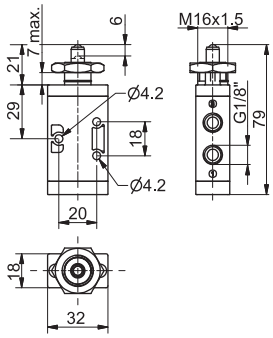

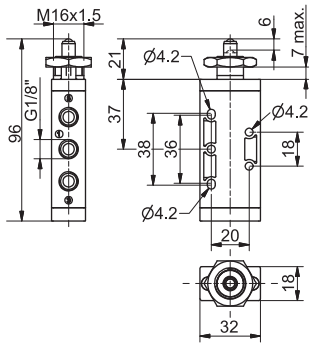

Weight gr. 77
Operating force 33 N

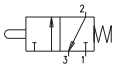

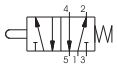

Weight gr. 90
Operating force 33 N

Operational characteristic

Fluid	Max working pressure (bar)	Temperature °C	Flow rate at 6 bar with Δp=1 (Nl/min)	Orifice size (mm)	Working ports size
Filtered and lubricated air	10 bar	Min. Max.	620 Nl/min	mm 6	G 1/8"

Roller lever - Spring

3/2 | Ordering code | 5/2

T228.Ⓣ.2.Ⓥ

Ⓣ	TYPE
	32 = 3 ways
	52 = 5 ways
Ⓥ	VERSION
	1 = Plastic roller
	1/2 = Ball bearing

Roller lever - Spring

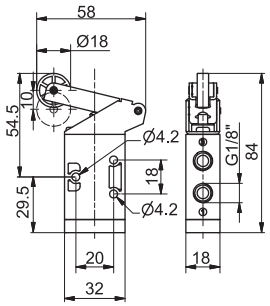

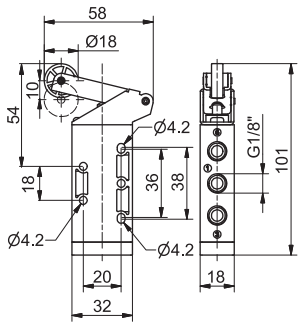

Weight gr. 90
Operating force 15 N

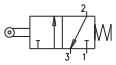

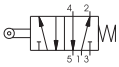

Weight gr. 102
Operating force 15 N

Operational characteristic

Fluid	Max working pressure (bar)	Temperature °C	Flow rate at 6 bar with Δp=1 (Nl/min)	Orifice size (mm)	Working ports size
Filtered and lubricated air	10 bar	Min. Max.	620 Nl/min	mm 6	G 1/8"

1

Roller lever (ball bearings) - Spring

3/2

Ordering code

T228.Ⓣ.2.1/1

Ⓣ	TYPE
	32 = 3 ways
	52 = 5 ways

5/2

Roller lever (ball bearings) - Spring

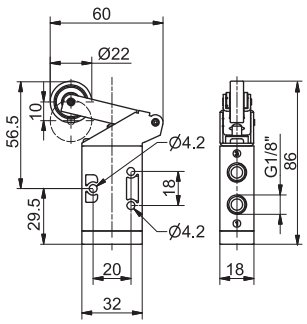

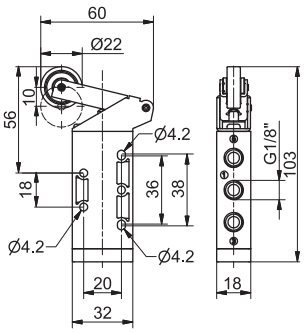

Weight gr. 105
Operating force 15 N

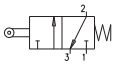

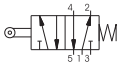

Weight gr. 117
Operating force 15 N

Operational characteristic

Fluid	Max working pressure (bar)	Temperature °C	Flow rate at 6 bar ith Δp=1 (Nl/min)	Orifice size (mm)	Working ports size
Filtered and lubricated air	10 bar	Min. Max.	620 Nl/min	mm 6	G 1/8"

Button lever - Spring

3/2

Ordering code

T228.Ⓣ.2.6/Ⓒ

Ⓣ	TYPE
	32 = 3 ways
	52 = 5 ways
Ⓒ	BUTTON COLOR
	1 = Red
	2 = Black
	3 = Green

5/2

Button lever - Spring

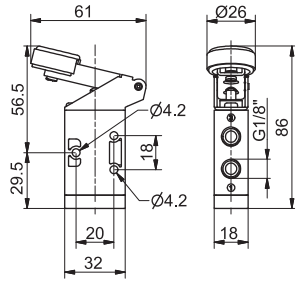

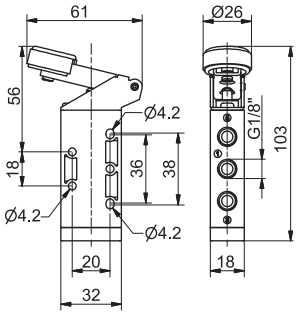

Weight gr. 95
Operating force 15 N

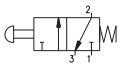

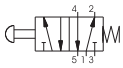

Weight gr. 87
Operating force 15 N

Operational characteristic

Fluid	Max working pressure (bar)	Temperature °C	Flow rate at 6 bar with Δp=1 (Nl/min)	Orifice size (mm)	Working ports size
Filtered and lubricated air	10 bar	Min. Max.	620 Nl/min	mm 6	G 1/8"

One way Roller lever - Spring

3/2

Ordering code

T228.Ⓣ.3.Ⓥ

Ⓣ	TYPE
	32 = 3 ways
	52 = 5 ways
Ⓥ	VERSION
	1 = Plastic roller
	1/2 = Ball bearing

5/2

One way Roller lever - Spring

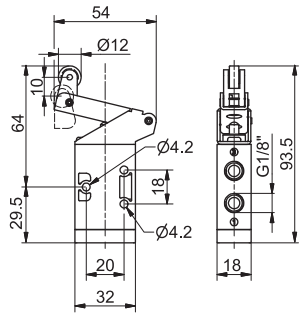

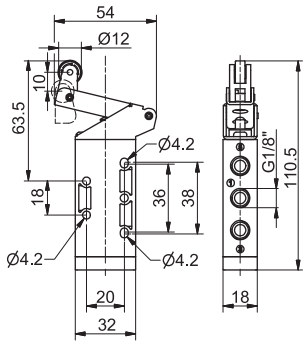

Weight gr. 85

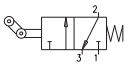

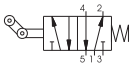

Weight gr. 97

Operational characteristic

Fluid	Max working pressure (bar)	Temperature °C	Flow rate at 6 bar with Δp=1 (Nl/min)	Orifice size (mm)	Working ports size
Filtered and lubricated air	10 bar	Min. Max.	620 Nl/min	mm 6	G 1/8"

1

Toggle Lever (for panel mounting) Ø 30

2 positions

3/2

Ordering code

T228.Ⓣ.5/Ⓒ

Ⓣ	TYPE
	32 = 3 ways
	52 = 5 ways
Ⓒ	BUTTON COLOR
	1 = Red
	2 = Black
	3 = Green

5/2

Toggle Lever (for panel mounting) Ø 30

2 positions

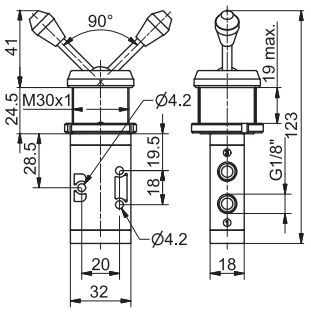

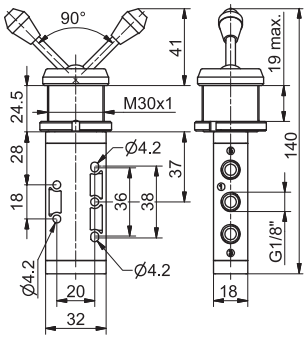

Weight gr. 168

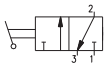

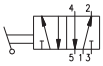

Weight gr. 180

Operational characteristic

Fluid	Max working pressure (bar)	Temperature °C	Flow rate at 6 bar with Δp=1 (Nl/min)	Orifice size (mm)	Working ports size
Filtered and lubricated air	10 bar	Min. Max.	620 Nl/min	mm 6	G 1/8"

Toggle Lever - 2 positions

3/2

Ordering code

T228.Ⓣ.55/Ⓒ

Ⓣ	TYPE
	32 = 3 ways
	52 = 5 ways
Ⓒ	BUTTON COLOR
	1 = Red
	2 = Black
	3 = Green

5/2

Toggle Lever - 2 positions

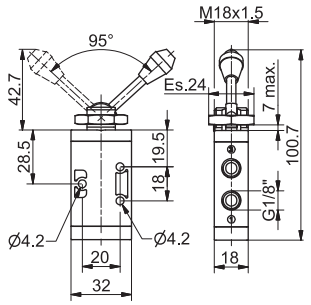

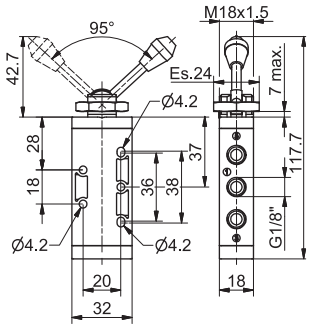

Weight gr. 84

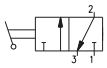

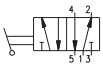

Weight gr. 96

Operational characteristic

Fluid	Max working pressure (bar)	Temperature °C	Flow rate at 6 bar with Δp=1 (Nl/min)	Orifice size (mm)	Working ports size
Filtered and lubricated air	10 bar	Min. Max.	620 Nl/min	mm 6	G 1/8"

Push button Ø 30 - spring

3/2

Ordering code

T228.Ⓣ.6.1/Ⓒ

Ⓣ	TYPE
	32 = 3 ways
	52 = 5 ways
Ⓒ	BUTTON COLOR
	1 = Red
	2 = Black
	3 = Green

5/2

Push button Ø 30 - spring

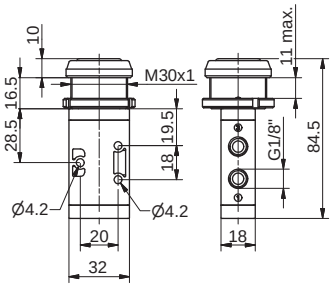

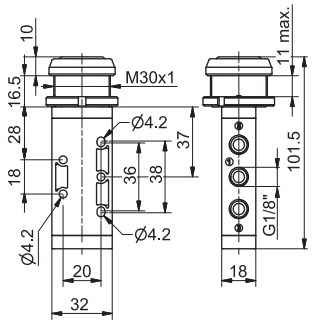

Weight gr. 125
Operating force 33 N

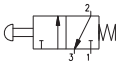

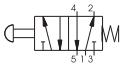

Weight gr. 137
Operating force 33 N

Operational characteristic

Fluid	Max working pressure (bar)	Temperature °C	Flow rate at 6 bar with Δp=1 (Nl/min)	Orifice size (mm)	Working ports size
Filtered and lubricated air	10 bar	Min. Max.	620 Nl/min	mm 6	G 1/8"

1

Push button - spring

3/2 | Ordering code | 5/2

T228.Ⓣ.6.22/Ⓒ

Ⓣ	TYPE
	32 = 3 ways
	52 = 5 ways
Ⓒ	BUTTON COLOR
	1 = Red
	2 = Black
	3 = Green
	4 = Yellow

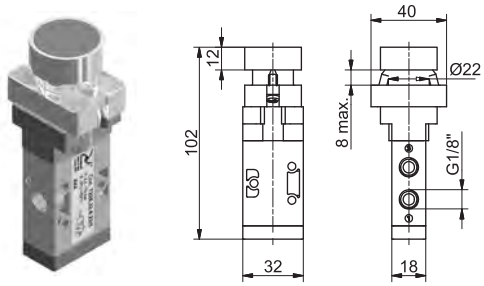

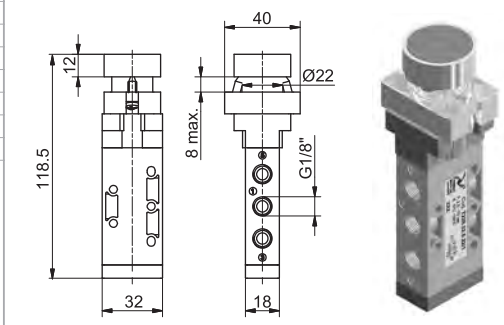

Weight gr. 200
Operating force 33N

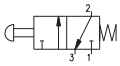

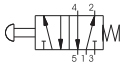

Weight gr. 212
Operating force 33N

Operational characteristic

Fluid	Max working pressure (bar)	Temperature °C	Flow rate at 6 bar with Δp=1 (Nl/min)	Orifice size (mm)	Working ports size
Filtered and lubricated air	10 bar	Min. Max.	620 Nl/min	mm 6	G 1/8"

Raised Push button - spring

3/2 | Ordering code | 5/2

T228.Ⓣ.6.23/Ⓒ

Ⓣ	TYPE
	32 = 3 ways
	52 = 5 ways
Ⓒ	BUTTON COLOR
	1 = Red
	2 = Black
	3 = Green
	4 = Yellow

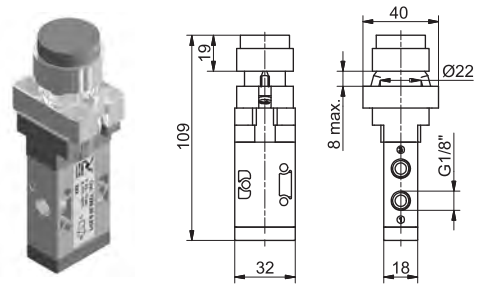

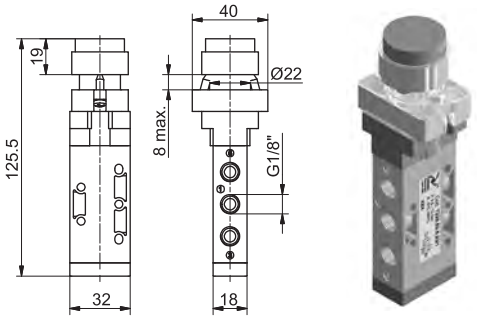

Weight gr. 205
Operating force 33N

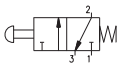

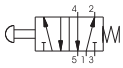

Weight gr. 217
Operating force 33N

Operational characteristic

Fluid	Max working pressure (bar)	Temperature °C	Flow rate at 6 bar with Δp=1 (Nl/min)	Orifice size (mm)	Working ports size
Filtered and lubricated air	10 bar	Min. Max.	620 Nl/min	mm 6	G 1/8"

Palm button - 2 positions

emergency - Rotate to unlock

3/2 | Ordering code | 5/2

T228.Ⓣ.6.25

Ⓣ	TYPE
	32 = 3 ways
	52 = 5 ways

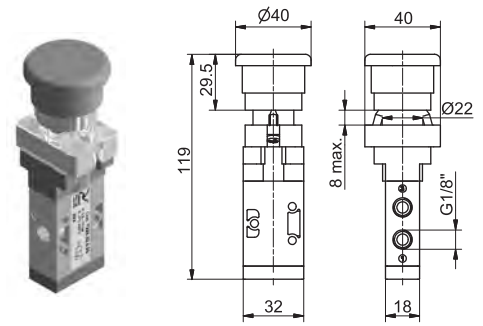

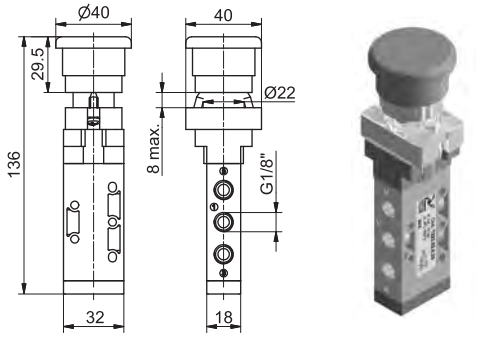

Weight gr. 210
Operating force 33N

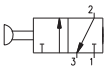

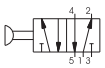

Weight gr. 202
Operating force 33N

Operational characteristic

Fluid	Max working pressure (bar)	Temperature °C	Flow rate at 6 bar with Δp=1 (Nl/min)	Orifice size (mm)	Working ports size
Filtered and lubricated air	10 bar	Min. Max.	620 Nl/min	mm 6	G 1/8"

1

Switch - 2 positions

3/2 | Ordering code | 5/2

T228.Ⓣ.6.27

	TYPE
Ⓣ	32 = 3 ways
	52 = 5 ways

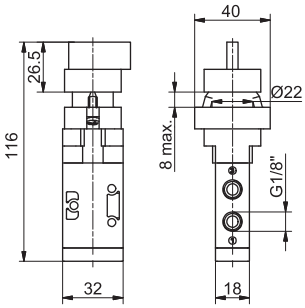

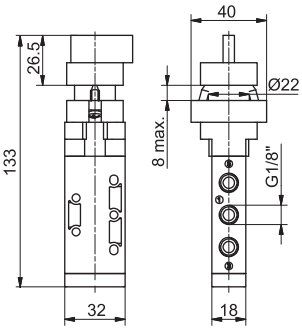

Weight gr. 205
Operating force 33N

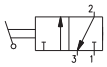

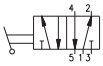

Weight gr. 217
Operating force 33N

Operational characteristic

Fluid	Max working pressure (bar)	Temperature °C	Flow rate at 6 bar with Δp=1 (Nl/min)	Orifice size (mm)	Working ports size
Filtered and lubricated air	10 bar	Min. Max.	620 Nl/min	mm 6	G 1/8"

Key switch - 2 positions

3/2 | Ordering code | 5/2

T228.Ⓣ.6.28

	TYPE
Ⓣ	32 = 3 ways
	52 = 5 ways

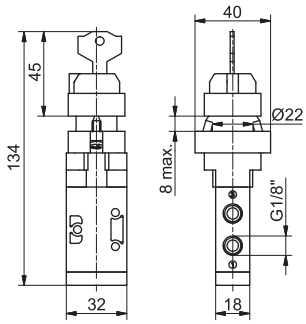

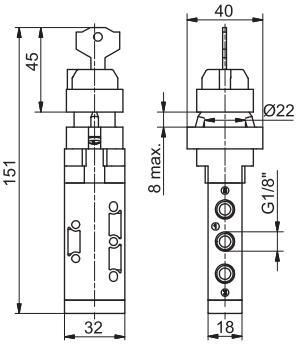

Weight gr. 205
Operating force 33N

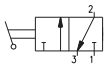

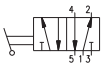

Weight gr. 217
Operating force 33N

Operational characteristic

Fluid	Max working pressure (bar)	Temperature °C	Flow rate at 6 bar with Δp=1 (Nl/min)	Orifice size (mm)	Working ports size
Filtered and lubricated air	10 bar	Min. Max.	620 Nl/min	mm 6	G 1/8"

Palm Push button Ø 30

3/2 | Ordering code | 5/2

T228.Ⓣ.7.1/Ⓒ

	TYPE
Ⓣ	32 = 3 ways
	52 = 5 ways
	BUTTON COLOR
Ⓒ	1 = Red
	2 = Black
	3 = Green

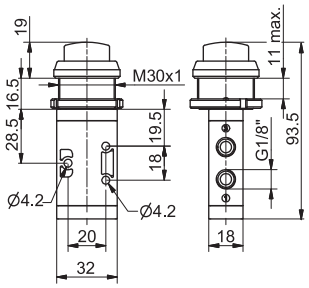

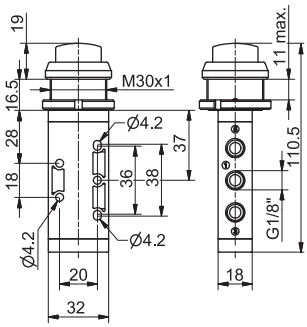

Weight gr. 118
Operating force 33N

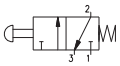

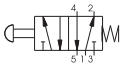

Weight gr. 130
Operating force 33N

Operational characteristic

Fluid	Max working pressure (bar)	Temperature °C	Flow rate at 6 bar with Δp=1 (Nl/min)	Orifice size (mm)	Working ports size
Filtered and lubricated air	10 bar	Min. Max.	620 Nl/min	mm 6	G 1/8"

1

Push button - Spring

3/2

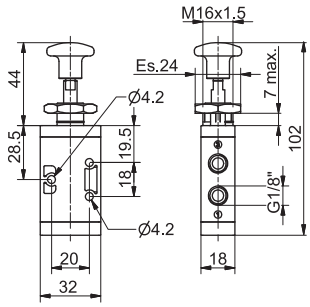

Weight gr. 95
Operating force 33N

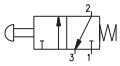

Ordering code

T228.Ⓣ.8.1/Ⓒ

Ⓣ	TYPE
	32 = 3 ways
	52 = 5 ways
Ⓒ	BUTTON COLOR
	1 = Red
	2 = Black
	3 = Green

5/2

Push button - Spring

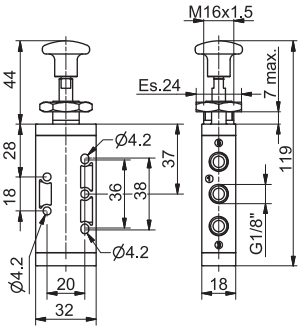

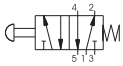

Weight gr. 107
Operating force 33N

Operational characteristic

Fluid	Max working pressure (bar)	Temperature °C	Flow rate at 6 bar with Δp=1 (Nl/min)	Orifice size (mm)	Working ports size
Filtered and lubricated air	10 bar	Min. Max.	620 Nl/min	mm 6	G 1/8"

Push button - 2 positions

3/2

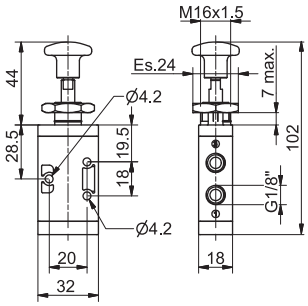

Weight gr. 95
Operating force 10N

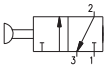

Ordering code

T228.Ⓣ.8/Ⓒ

Ⓣ	TYPE
	32 = 3 ways
	52 = 5 ways
Ⓒ	BUTTON COLOR
	1 = Red
	2 = Black
	3 = Green

5/2

Push button - 2 positions

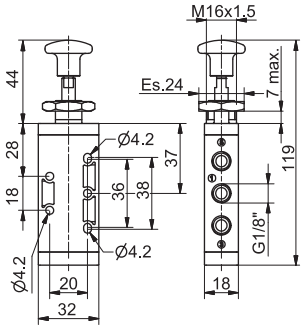

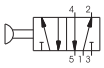

Weight gr. 107
Operating force 10N

Operational characteristic

Fluid	Max working pressure (bar)	Temperature °C	Flow rate at 6 bar with Δp=1 (Nl/min)	Orifice size (mm)	Working ports size
Filtered and lubricated air	10 bar	Min. Max.	620 Nl/min	mm 6	G 1/8"

Lever lateral - Spring

3/2

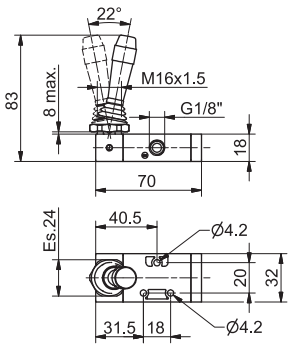

Weight gr. 100

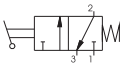

Ordering code

T228.Ⓣ.9.1/Ⓒ

Ⓣ	TYPE
	32 = 3 ways
	52 = 5 ways
Ⓒ	BUTTON COLOR
	1 = Red
	2 = Black
	3 = Green

5/2

Lever lateral - Spring

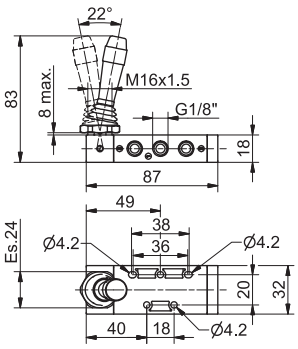

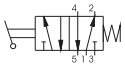

Weight gr. 110

Operational characteristic

Fluid	Max working pressure (bar)	Temperature °C	Flow rate at 6 bar with Δp=1 (Nl/min)	Orifice size (mm)	Working ports size
Filtered and lubricated air	10 bar	Min. Max.	620 Nl/min	mm 6	G 1/8"

1

Lateral lever - 2 positions

3/2

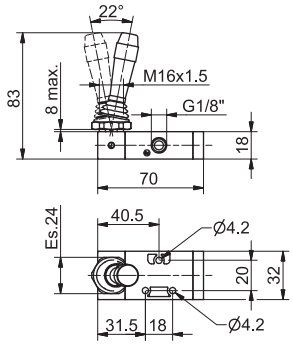

Weight gr. 100

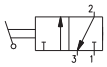

Ordering code

T228.Ⓣ.9/Ⓒ

Ⓣ	TYPE
	32 = 3 ways
	52 = 5 ways
Ⓒ	BUTTON COLOR
	1 = Red
	2 = Black
	3 = Green

5/2

Lateral lever - 2 positions

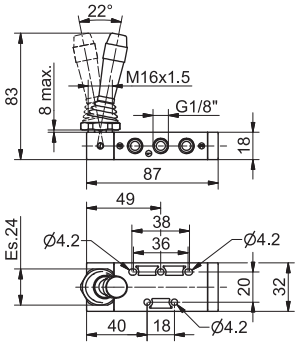

Weight gr. 110

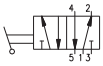

Operational characteristic

Fluid	Max working pressure (bar)	Temperature °C	Flow rate at 6 bar with Δp=1 (Nl/min)	Orifice size (mm)	Working ports size
Filtered and lubricated air	10 bar	Min. Max.	620 Nl/min	mm 6	G 1/8"

Lateral Lever spring - 3 positions

5/3

Ordering code

T228.53.Ⓕ.9.1/Ⓒ

Ⓕ	FUNCTION
	31 = Closed Centres
	32 = Open Centres
Ⓒ	BUTTON COLOR
	1 = Red
	2 = Black
	3 = Green

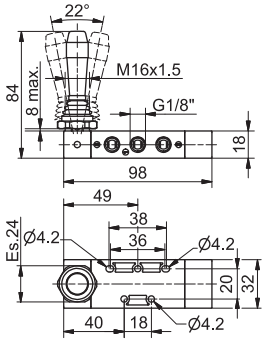

Weight gr. 140

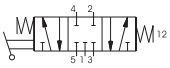

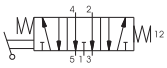

Operational characteristic

Fluid	Max working pressure (bar)	Temperature °C	Flow rate at 6 bar with Δp=1 (Nl/min)	Orifice size (mm)	Working ports size
Filtered and lubricated air	10 bar	Min. Max.	410 Nl/min	mm 6	G 1/8"

Lateral lever - 3 positions detent

5/3

Ordering code

T228.53.Ⓕ.9/Ⓒ

Ⓕ	FUNCTION
	31 = Closed Centres
	32 = Open Centres
Ⓒ	BUTTON COLOR
	1 = Red
	2 = Black
	3 = Green

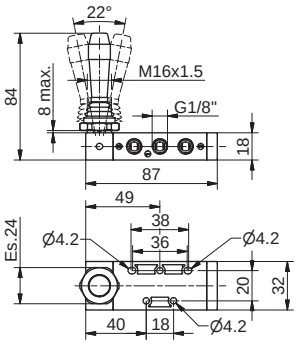

Weight gr. 110

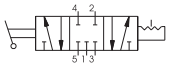

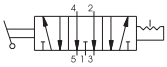

Operational characteristic

Fluid	Max working pressure (bar)	Temperature °C	Flow rate at 6 bar with Δp=1 (Nl/min)	Orifice size (mm)	Working ports size
Filtered and lubricated air	10 bar	Min. Max.	410 Nl/min	mm 6	G 1/8"

Tappet panel - Spring

3/2 | Ordering code | 5/2

224.Ⓣ.1.1

	TYPE
Ⓣ	32 = 3 ways
	52 = 5 ways

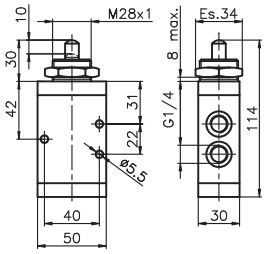

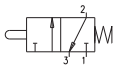

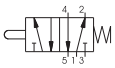

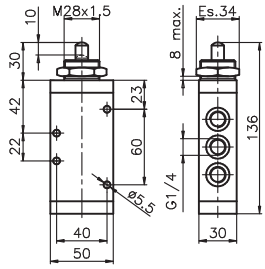

Tappet panel - Spring

Weight gr. 370
Operating force 71,5N

Weight gr. 455
Operating force 71,5N

Operational characteristic

Fluid	Max working pressure (bar)	Temperature °C	Flow rate at 6 bar with Δp=1 (Nl/min)	Orifice size (mm)	Working ports size
Filtered and lubricated air	10 bar	-5 - +70	1360 Nl/min	mm 8	G 1/4"

Lever roller - Spring

3/2 | Ordering code | 5/2

224.Ⓣ.2.1

	TYPE
Ⓣ	32 = 3 ways
	52 = 5 ways

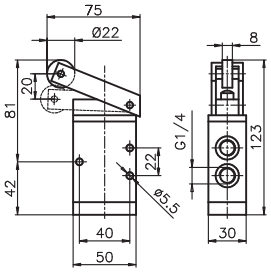

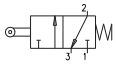

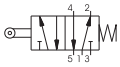

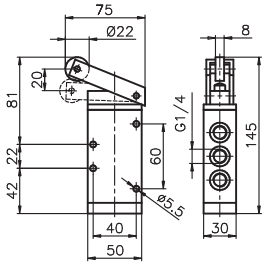

Lever roller - Spring

Weight gr. 510
Operating force 35N

Weight gr. 595
Operating force 35N

Operational characteristic

Fluid	Max working pressure (bar)	Temperature °C	Flow rate at 6 bar with Δp=1 (Nl/min)	Orifice size (mm)	Working ports size
Filtered and lubricated air	10 bar	-5 - +70	1360 Nl/min	mm 8	G 1/4"

Lever roller unidirectional - Spring

3/2 | Ordering code | 5/2

224.Ⓣ.3.1

	TYPE
Ⓣ	32 = 3 ways
	52 = 5 ways

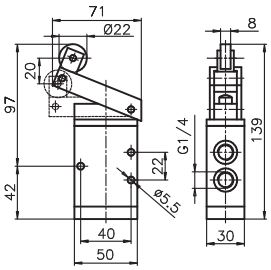

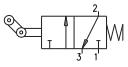

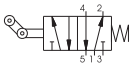

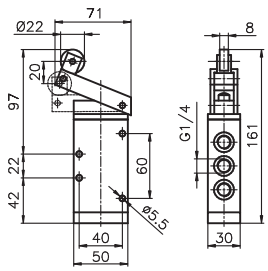

Lever roller unidirectional - Spring

Weight gr. 525
Operating force 35N

Weight gr. 610
Operating force 35N

Operational characteristic

Fluid	Max working pressure (bar)	Temperature °C	Flow rate at 6 bar with Δp=1 (Nl/min)	Orifice size (mm)	Working ports size
Filtered and lubricated air	10 bar	-5 - +70	1360 Nl/min	mm 8	G 1/4"

1

Push button - Spring

3/2

Ordering code

224.Ⓣ.8.1

Ⓣ	TYPE
	32 = 3 ways
	52 = 5 ways

5/2

Push button - Spring

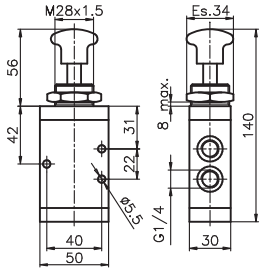

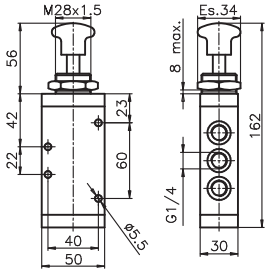

Weight gr. 395
Operating force 71,5N

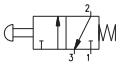

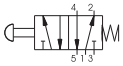

Weight gr. 480
Operating force 71,5N

Operational characteristic

Fluid	Max working pressure (bar)	Temperature °C	Flow rate at 6 bar with Δp=1 (Nl/min)	Orifice size (mm)	Working ports size
Filtered and lubricated air	10 bar	-5 - +70	1360 Nl/min	mm 8	G 1/4"

Push button 2 positions

3/2

Ordering code

224.Ⓣ.8

Ⓣ	TYPE
	32 = 3 ways
	52 = 5 ways

5/2

Push button 2 positions

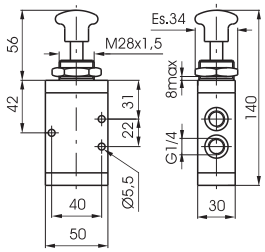

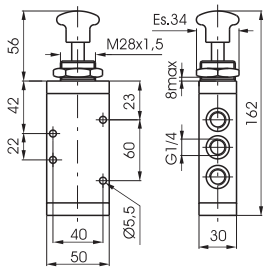

Weight gr. 385
Operating force 105N

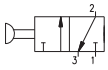

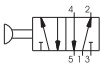

Weight gr. 470
Operating force 10N

Operational characteristic

Fluid	Max working pressure (bar)	Temperature °C	Flow rate at 6 bar with Δp=1 (Nl/min)	Orifice size (mm)	Working ports size
Filtered and lubricated air	10 bar	-5 - +70	1360 Nl/min	mm 8	G 1/4"

Lever lateral - Spring

3/2

Ordering code

224.Ⓣ.9.1/Ⓒ

Ⓣ	TYPE
	32 = 3 ways
	52 = 5 ways
Ⓒ	BUTTON COLOR
	1 = Red
	2 = Black
	3 = Green

5/2

Lever lateral - Spring

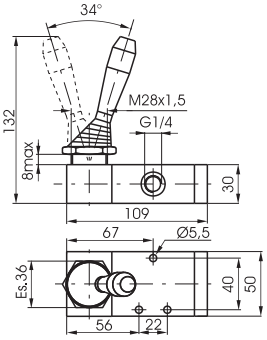

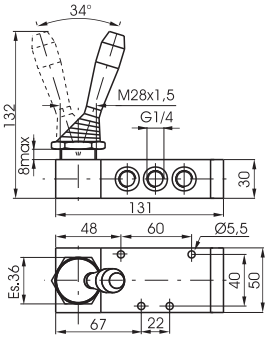

Weight gr. 520

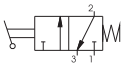

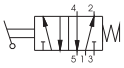

Weight gr. 605

Operational characteristic

Fluid	Max working pressure (bar)	Temperature °C	Flow rate at 6 bar with Δp=1 (Nl/min)	Orifice size (mm)	Working ports size
Filtered and lubricated air	10 bar	-5 - +70	1360 Nl/min	mm 8	G 1/4"

1

Lever lateral 2 positions

3/2

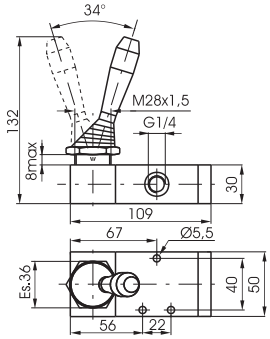

Weight gr. 510

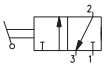

Ordering code

224.Ⓣ.9/Ⓒ

Ⓣ	TYPE
	32 = 3 ways
	52 = 5 ways
Ⓒ	BUTTON COLOR
	1 = Red
	2 = Black
	3 = Green

5/2

Lever lateral 2 positions

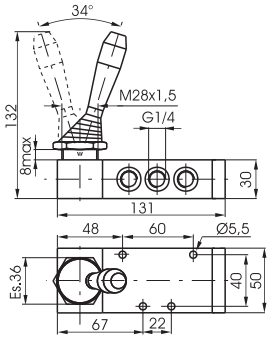

Weight gr. 595

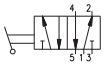

Operational characteristic

Fluid	Max working pressure (bar)	Temperature °C	Flow rate at 6 bar with Δp=1 (Nl/min)	Orifice size (mm)	Working ports size
Filtered and lubricated air	10 bar	-5 - +70	1360 Nl/min	mm 8	G 1/4"

Pedal aluminium - Spring

Ordering code

224.Ⓣ.10.1

Ⓣ	TYPE
	32 = 3 ways
	52 = 5 ways

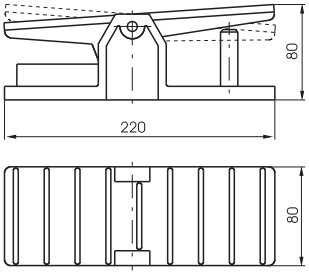

Weight gr. 1.070 (3/2)
Weight gr. 1.155 (3/2)

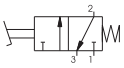

Operational characteristic

Fluid	Max working pressure (bar)	Temperature °C	Flow rate at 6 bar with Δp=1 (Nl/min)	Orifice size (mm)	Working ports size
Filtered and lubricated air	10 bar	-5 - +70	1360 Nl/min	mm 8	G 1/4"

Pedal aluminium 2 positions

Ordering code

224.Ⓣ.10

Ⓣ	TYPE
	32 = 3 ways
	52 = 5 ways

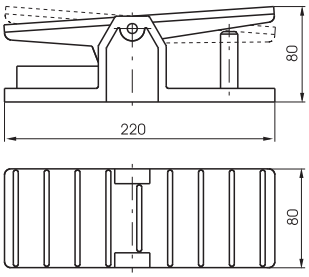

Weight gr. 1.060 (3/2)
Weight gr. 1.145 (3/2)

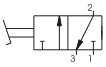

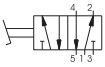

Operational characteristic

Fluid	Max working pressure (bar)	Temperature °C	Flow rate at 6 bar with Δp=1 (Nl/min)	Orifice size (mm)	Working ports size
Filtered and lubricated air	10 bar	-5 - +70	1360 Nl/min	mm 8	G 1/4"

1

Pedal protected - Spring

Ordering code	
214.Ⓣ.10.Ⓥ	
Ⓣ	TYPE
	32 = 3 ways
	52 = 5 ways
Ⓥ	VERSION
	1/1 = Standard version
	2/1 = without safety device

Weight gr. 1.730

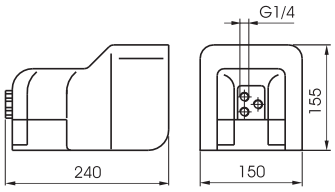

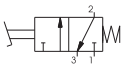

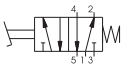

Operational characteristic

Fluid	Max working pressure (bar)	Temperature °C	Flow rate at 6 bar with Δp=1 (Nl/min)	Orifice size (mm)	Working ports size
Filtered and lubricated air	10 bar	-5 - +70	1360 Nl/min	mm 8	G 1/4"

Pedal protected 2 positions

Ordering code	
214.Ⓣ.10/1	
Ⓣ	TYPE
	32 = 3 ways
	52 = 5 ways

Weight gr. 1.730

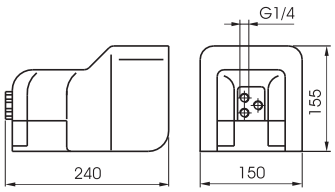

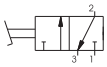

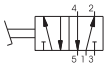

Operational characteristic

Fluid	Max working pressure (bar)	Temperature °C	Flow rate at 6 bar with Δp=1 (Nl/min)	Orifice size (mm)	Working ports size
Filtered and lubricated air	10 bar	-5 - +70	1360 Nl/min	mm 8	G 1/4"

Lever lateral spring 3 positions

Ordering code	
224.53.Ⓕ.9.1/Ⓒ	
Ⓕ	FUNCTION
	31 = Closed centres
	32 = Open centres
Ⓒ	BUTTON COLOR
	1 = Red
	2 = Black
	3 = Green

Weight gr. 745

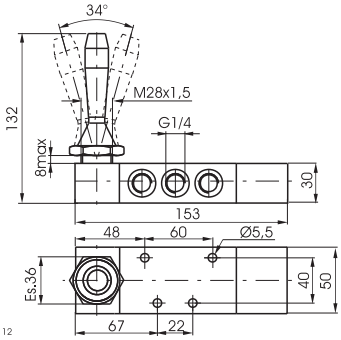

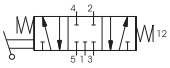

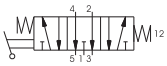

Operational characteristic

Fluid	Max working pressure (bar)	Temperature °C	Flow rate at 6 bar with Δp=1 (Nl/min)	Orifice size (mm)	Working ports size
Filtered and lubricated air	10 bar	-5 - +70	1280 Nl/min	mm 8	G 1/4"

Lever lateral 3 positions

Ordering code	
224.53.Ⓕ.9/Ⓒ	
Ⓕ	FUNCTION
	31 = Closed centres
	32 = Open centres
Ⓒ	BUTTON COLOR
	1 = Red
	2 = Black
	3 = Green

Weight gr. 605

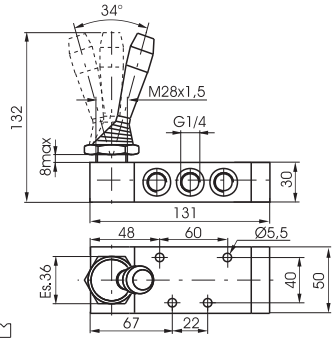

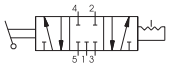

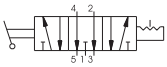

Operational characteristic

Fluid	Max working pressure (bar)	Temperature °C	Flow rate at 6 bar with Δp=1 (Nl/min)	Orifice size (mm)	Working ports size
Filtered and lubricated air	10 bar	-5 - +70	1280 Nl/min	mm 8	G 1/4"

Lever lateral with locking device - 2 positions

Ordering code
224.52.9.2

Weight gr. 825

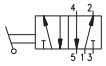

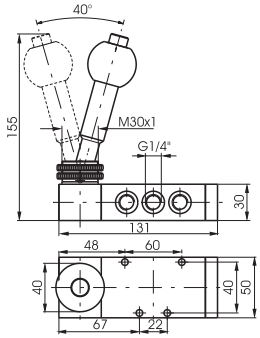

Operational characteristic

Fluid	Max working pressure (bar)	Temperature °C	Flow rate at 6 bar with Δp=1 (Nl/min)	Orifice size (mm)	Working ports size
Filtered and lubricated air	10 bar	-5 - +70	1020 Nl/min	mm 8	G 1/4"

Lever lateral with locking device - Spring 3 positions

Ordering code
224.53.Ⓕ.9.2
Ⓕ FUNCTION
31 = Closed centres
32 = Open centres

Weight gr. 965

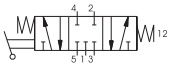

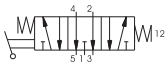

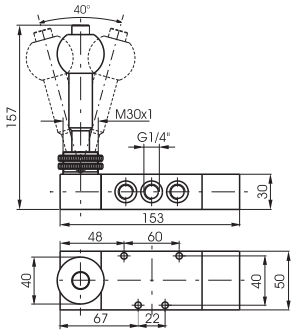

Operational characteristic

Fluid	Max working pressure (bar)	Temperature °C	Flow rate at 6 bar with Δp=1 (Nl/min)	Orifice size (mm)	Working ports size
Filtered and lubricated air	10 bar	-5 - +70	1020 Nl/min	mm 8	G 1/4"

Pedal - Spring 3 positions

Ordering code
224.53.Ⓕ.10.1
Ⓕ FUNCTION
31 = Closed centres
32 = Open centres

Weight gr. 1.285

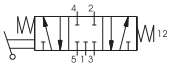

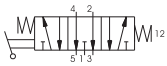

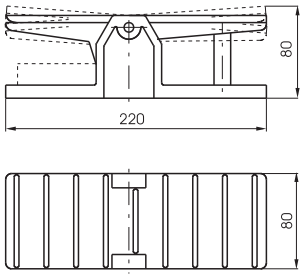

Operational characteristic

Fluid	Max working pressure (bar)	Temperature °C	Flow rate at 6 bar with Δp=1 (Nl/min)	Orifice size (mm)	Working ports size
Filtered and lubricated air	10 bar	-5 - +70	1280 Nl/min	mm 8	G 1/4"

Pedal 3 positions

Ordering code
224.53.Ⓕ.10
Ⓕ FUNCTION
31 = Closed centres
32 = Open centres

Weight gr. 1.145

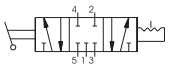

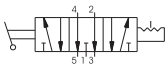

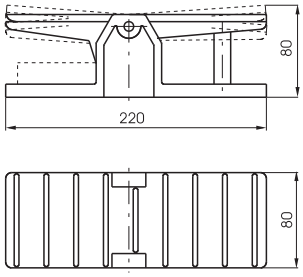

Operational characteristic

Fluid	Max working pressure (bar)	Temperature °C	Flow rate at 6 bar with Δp=1 (Nl/min)	Orifice size (mm)	Working ports size
Filtered and lubricated air	10 bar	-5 - +70	1280 Nl/min	mm 8	G 1/4"

1

Push button - Spring

3/2

Ordering code

T224.Ⓣ.8.1

Ⓣ	TYPE
	32 = 3 ways
	52 = 5 ways

5/2

Push button - Spring

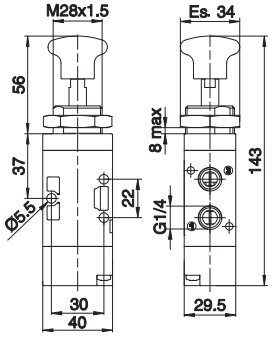

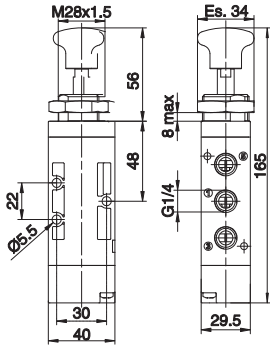

Weight gr. 170
Operating force 50N

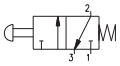

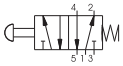

Weight gr. 200
Operating force 50N

Operational characteristic

Fluid	Max working pressure (bar)	Temperature °C	Flow rate at 6 bar with Δp=1 (Nl/min)	Ø Orifice size (mm)	Working ports size
Filtered and lubricated air	10 bar	Min. Max.	1050 Nl/min	mm 8,5	G 1/4"

Push button 2 positions

3/2

Ordering code

T224.Ⓣ.8

Ⓣ	TYPE
	32 = 3 ways
	52 = 5 ways

5/2

Push button 2 positions

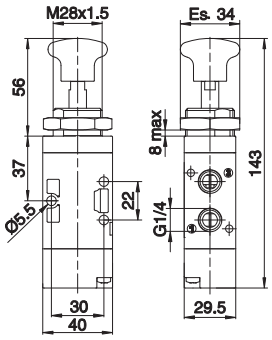

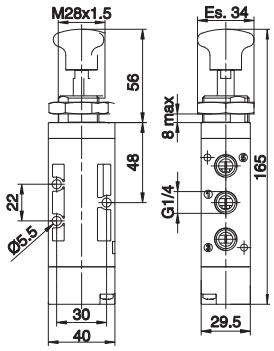

Weight gr. 170
Operating force 13N

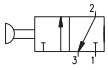

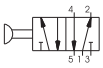

Weight gr. 200
Operating force 13N

Operational characteristic

Fluid	Max working pressure (bar)	Temperature °C	Flow rate at 6 bar with Δp=1 (Nl/min)	Ø Orifice size (mm)	Working ports size
Filtered and lubricated air	10 bar	Min. Max.	1050 Nl/min	mm 8,5	G 1/4"

Lever lateral - Spring

3/2

Ordering code

T224.Ⓣ.9.1/Ⓒ

Ⓣ	TYPE
	32 = 3 ways
	52 = 5 ways
Ⓒ	LEVER COLOR
	1 = Red
	2 = Black
	3 = Green

5/2

Lever lateral - Spring

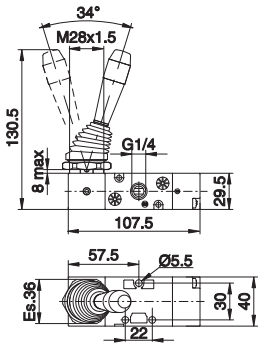

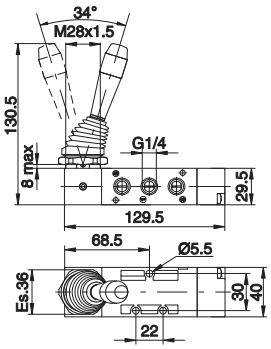

Weight gr. 220

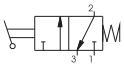

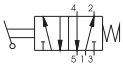

Weight gr. 250

Operational characteristic

Fluid	Max working pressure (bar)	Temperature °C	Flow rate at 6 bar with Δp=1 (Nl/min)	Ø Orifice size (mm)	Working ports size
Filtered and lubricated air	10 bar	Min. Max.	1050 Nl/min	mm 8,5	G 1/4"

Lever lateral 2 positions — 3/2

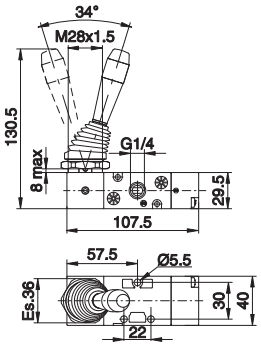

Weight gr. 220

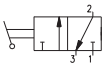

Ordering code

T224.Ⓣ.9/Ⓒ

Ⓣ	TYPE
	32 = 3 ways
	52 = 5 ways
Ⓒ	LEVER COLOR
	1 = Red
	2 = Black
	3 = Green

Lever lateral 2 positions — 5/2

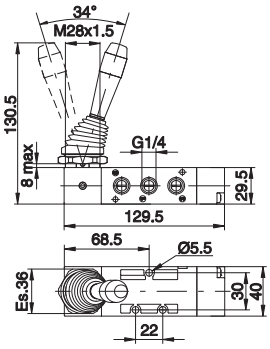

Weight gr. 250

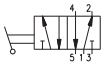

Operational characteristic

Fluid	Max working pressure (bar)	Temperature °C	Flow rate at 6 bar with Δp=1 (Nl/min)	Ø Orifice size (mm)	Working ports size
Filtered and lubricated air	10 bar	Min. Max.	1050 Nl/min	mm 8,5	G 1/4"

Lever lateral spring centre - 3 positions — 5/3

Ordering code

T224.53.Ⓕ.9.1/Ⓒ

Ⓕ	FUNCTION
	31 = Closed centres
	32 = Open centres
	33 = Pressured centres
Ⓒ	LEVER COLOR
	1 = Red
	2 = Black
	3 = Green

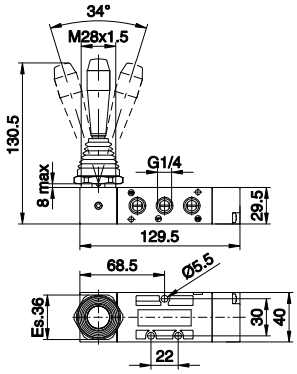

Weight gr. 270

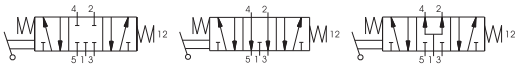

Operational characteristic

Fluid	Max working pressure (bar)	Temperature °C	Flow rate at 6 bar with Δp=1 (Nl/min)	Ø Orifice size (mm)	Working ports size
Filtered and lubricated air	10 bar	Min. Max.	900 Nl/min	mm 8,5	G 1/4"

Lever lateral - 3 positions detent — 5/3

Ordering code

T224.53.Ⓕ.9/Ⓒ

Ⓕ	FUNCTION
	31 = Closed centres
	32 = Open centres
	33 = Pressured centres
Ⓒ	LEVER COLOR
	1 = Red
	2 = Black
	3 = Green

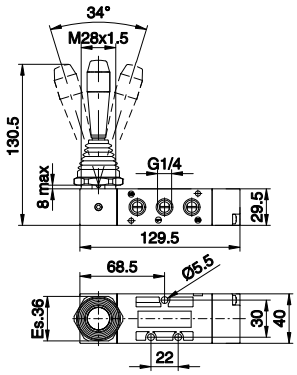

Weight gr. 270

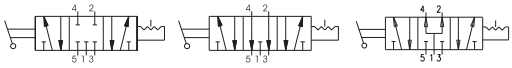

Operational characteristic

Fluid	Max working pressure (bar)	Temperature °C	Flow rate at 6 bar with Δp=1 (Nl/min)	Ø Orifice size (mm)	Working ports size
Filtered and lubricated air	10 bar	Min. Max.	900 Nl/min	mm 8,5	G 1/4"

1

Lever lateral - Spring

3/2 | Ordering code | 5/2

212.Ⓣ.9.1

	TYPE
Ⓣ	32 = 3 ways
	52 = 5 ways

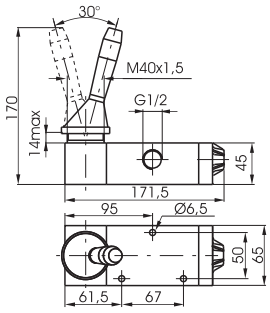

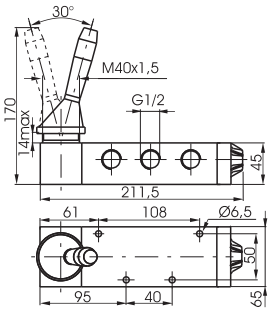

Weight gr. 1.480

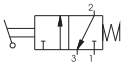

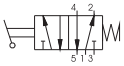

Weight gr. 1.765

Operational characteristic

Fluid	Max working pressure (bar)	Temperature °C	Flow rate at 6 bar with Δp=1 (Nl/min)	Orifice size (mm)	Working ports size
Filtered and lubricated air	10 bar	-5 - +70	3500 Nl/min	mm 15	G 1/2"

Lever lateral - 2 positions

3/2 | Ordering code | 5/2

212.Ⓣ.9

	TYPE
Ⓣ	32 = 3 ways
	52 = 5 ways

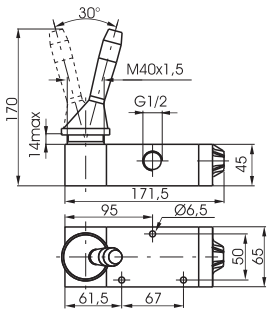

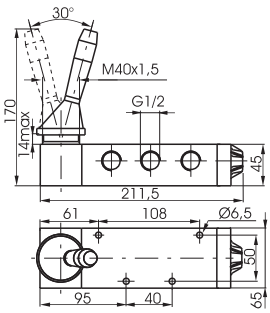

Weight gr. 1.460

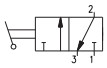

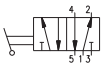

Weight gr. 1.745

Operational characteristic

Fluid	Max working pressure (bar)	Temperature °C	Flow rate at 6 bar with Δp=1 (Nl/min)	Orifice size (mm)	Working ports size
Filtered and lubricated air	10 bar	-5 - +70	3500 Nl/min	mm 15	G 1/2"

Lever lateral - Spring 3 positions

5/3

Ordering code

212.53.Ⓕ.9.1

	FUNCTION
Ⓕ	31 = Closed centres
	32 = Open centres

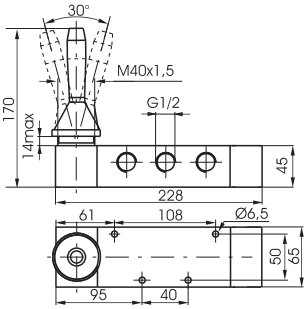

Weight gr. 2.100

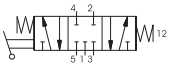

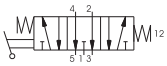

Operational characteristic

Fluid	Max working pressure (bar)	Temperature °C	Flow rate at 6 bar with Δp=1 (Nl/min)	Orifice size (mm)	Working ports size
Filtered and lubricated air	10 bar	-5 - +70	3000 Nl/min	mm 15	G 1/2"

Lever lateral Ø40 - 3 positions

5/3

1

Ordering code

212.53.Ⓕ.9

Ⓕ	FUNCTION
	31 = Closed centres
	32 = Open centres

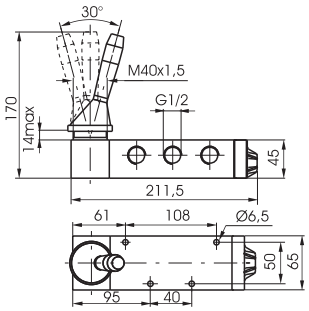

Weight gr. 1.765

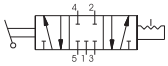

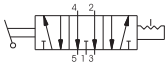

Operational characteristic

Fluid	Max working pressure (bar)	Temperature °C	Flow rate at 6 bar with Δp=1 (Nl/min)	Orifice size (mm)	Working ports size
Filtered and lubricated air	10 bar	-5 - +70	3000 Nl/min	mm 15	G 1/2"

1

Lever lateral - Spring

3/2 | Ordering code | 5/2

211.Ⓣ.9.1

Ⓣ	TYPE
	32 = 3 ways
	52 = 5 ways

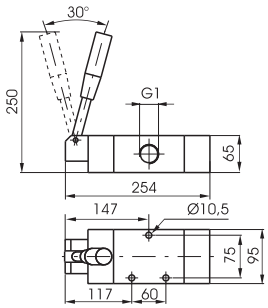

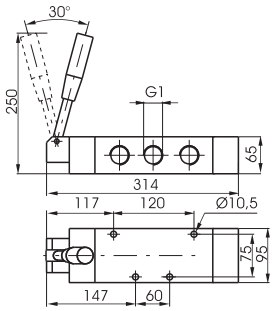

Weight gr. 4.300

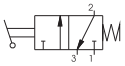

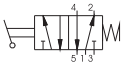

Weight gr. 4900

Operational characteristic

Fluid	Max working pressure (bar)	Temperature °C	Flow rate at 6 bar with Δp=1 (Nl/min)	Orifice size (mm)	Working ports size
Filtered and lubricated air	10 bar	-5 - +70	6500 Nl/min	mm 20	G 1"

Lever lateral 2 positions

3/2 | Ordering code | 5/2

211.Ⓣ.9

Ⓣ	TYPE
	32 = 3 ways
	52 = 5 ways

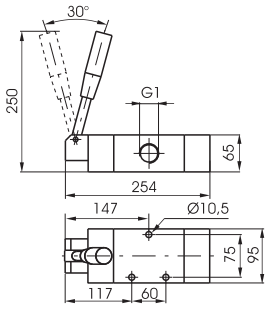

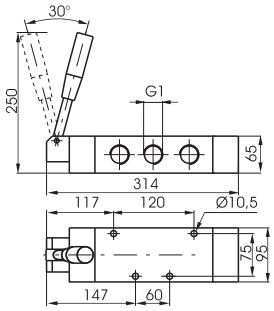

Weight gr. 4.300

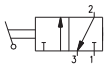

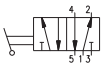

Weight gr. 4900

Operational characteristic

Fluid	Max working pressure (bar)	Temperature °C	Flow rate at 6 bar with Δp=1 (Nl/min)	Orifice size (mm)	Working ports size
Filtered and lubricated air	10 bar	-5 - +70	6500 Nl/min	mm 20	G 1"

Lever lateral - Spring 3 positions

5/3

Ordering code

211.53.Ⓕ.9.1

Ⓕ	FUNCTION
	31 = Closed centres
	32 = Open centres

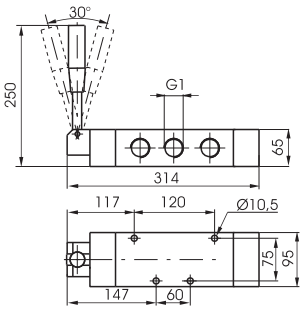

Weight gr. 5.000

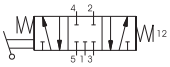

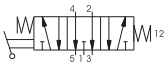

Operational characteristic

Fluid	Max working pressure (bar)	Temperature °C	Flow rate at 6 bar with Δp=1 (Nl/min)	Orifice size (mm)	Working ports size
Filtered and lubricated air	10 bar	-5 - +70	6500 Nl/min	mm 20	G 1"

Lever lateral - 3 positions

5/3

1

Ordering code	
211.53.Ⓕ.9	
Ⓕ	FUNCTION
	31 = Closed centres
	32 = Open centres

Weight gr. 5.000

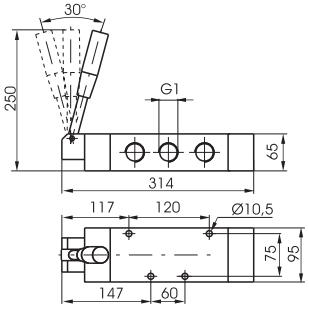

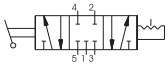

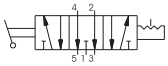

Operational characteristic

Fluid	Max working pressure (bar)	Temperature °C	Flow rate at 6 bar with Δp=1 (Nl/min)	Orifice size (mm)	Working ports size
Filtered and lubricated air	10 bar	-5 - +70	6500 Nl/min	mm 20	G 1"

General

The pneumatic actuated valves are grouped in this part of catalogue because they have similar operating conditions of the solenoid valves. In fact the commutation signal is remote as it is for the manual and mechanical actuated valves.

In the first part of these catalogues are listed the pneumatic actuated valves for single use not suitable to be assembled on bases but eventually on manifold with one inlet port only.

The valves series 800 are suitable for both single and ganged applications. These valves have a diversified use of 3-ways and 5-ways based on balanced spool as shown on functional symbols.
The repositions are made by spring, differential pneumatic spring or pneumatic fot the bistable and centre spring return.

Construction characteristics

<table>
<tr><th></th><th>Body</th><th>Actuators</th><th>Bottom plates</th><th>Pistons</th><th>Spacers</th><th>Seals</th><th>Spools</th><th>Springs</th></tr>
<tr><td>Series 104</td><td colspan="2">Technopolymer</td><td>/</td><td rowspan="2">Aluminium</td><td rowspan="2">Technopolymer</td><td rowspan="2">NBR</td><td rowspan="2">Steel</td><td>Stainless steel</td></tr>
<tr><td>Series 105</td><td colspan="2">Aluminium</td><td>/</td><td>Spring steel</td></tr>
<tr><td>Series 805</td><td colspan="3" rowspan="2">Aluminium</td><td rowspan="2">/</td><td rowspan="2">HNBR</td><td rowspan="2">Aluminium</td><td>Stainless steel</td></tr>
<tr><td>Series 808</td><td>Spring steel</td></tr>
<tr><td>Series 228</td><td>Aluminium</td><td>Aluminium
Technopolymer</td><td colspan="3">Technopolymer</td><td>NBR</td><td>Steel</td><td>Spring steel</td></tr>
<tr><td>Series T228
(Ver. 3/2-5/2)</td><td colspan="5" rowspan="2">Technopolymer</td><td rowspan="2">NBR</td><td>Technopolymer</td><td rowspan="2">Spring steel</td></tr>
<tr><td>Series T228
(Ver.5/3)</td><td>Steel</td></tr>
<tr><td>Series 488</td><td>Aluminium</td><td colspan="4">Technopolymer</td><td>NBR</td><td>Steel</td><td rowspan="3">Stainless steel</td></tr>
<tr><td>Series T488
(Ver. 3/2- 5/2)</td><td colspan="5" rowspan="2">Technopolymer</td><td rowspan="2">NBR</td><td>Technopolymer</td></tr>
<tr><td>Series T488
(Ver. 5/3)</td><td>Steel</td></tr>
<tr><td>Series 224</td><td colspan="2">Aluminium</td><td>Technopolymer</td><td>Aluminium</td><td>Technopolymer</td><td>NBR</td><td>Steel</td><td>Spring steel</td></tr>
<tr><td>Series T224
(Ver. 3/2-5/2)</td><td colspan="5" rowspan="2">Technopolymer</td><td rowspan="2">NBR</td><td>Technopolymer</td><td>Spring steel</td></tr>
<tr><td>Series T224
(Ver. 5/3)</td><td>Steel</td><td>Stainless steel</td></tr>
<tr><td>Series 212</td><td colspan="4" rowspan="2">Aluminium</td><td>Technopolymer</td><td>NBR</td><td>Steel</td><td rowspan="3">Spring steel</td></tr>
<tr><td>Series 212/2</td><td>/</td><td>PUR</td><td>Aluminium</td></tr>
<tr><td>Series 211</td><td colspan="5">Aluminium</td><td>NBR</td><td>Steel</td></tr>
</table>

Use and maintenance

These valves have an average life of 15 million cycles depending on the application and air quality, filtered and lubricated air using specified lubricants will dramatically reduce the wear of the seals and ensures long and trouble free operation.
Please ensure that the valve is being used according with the manufacturers specification, such as air pressure and temperature and that exhaust ports 3 & 5 are protected against the possible ingress of dirt or debris.
Repair kits including the spool complete with seals are available for overhauling the valves; however, although this is a simple operation it should be carried out by a competent person.

ATTENTION: use hydraulic oil class H for lubrication such as MAGNA GC 32 (Castrol).

Pneumatic - Spring

2/2
3/2

Lateral connections

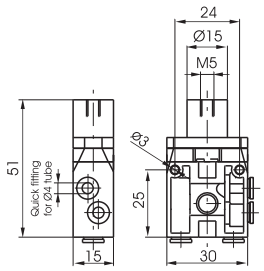

Weight gr. 25
Minimum piloting pressure 2,5 bar

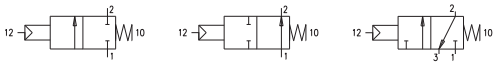

Ordering code

104.T.11.1.CF

T	TYPE
	22 = 2 ways
	32 = 3 ways
C	CONNECTION TYPE
	L = Lateral
	P = Rear
F	FUNCTION
	A = Normally Open
	C = Normally Closed

2/2
3/2

Pneumatic - Spring

Rear connections

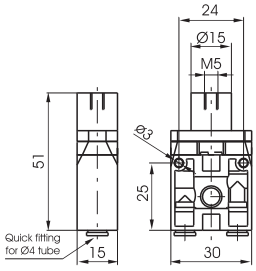

Weight gr. 25
Minimum piloting pressure 2,5 bar

Operational characteristic

Fluid	Max working pressure (bar)	Temperature °C	Flow rate at 6 bar with Δp=1 (Nl/min)	Orifice size (mm)	Working ports size	Pilot ports size
Filtered air, with or without lubrication	10 bar	Min. Max.	90 Nl/min	mm 2,5	ø4 tube	M5

Pneumatic - Spring

3/2

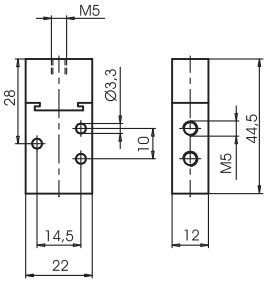

Weight gr. 90
Minimum piloting pressure 2,5 bar

Ordering code

105.T.11.1

T	TYPE
	32 = 3 ways
	52 = 5 ways

5/2

Pneumatic - Spring

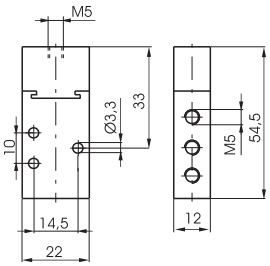

Weight gr. 100
Minimum piloting pressure 2,5 bar

Operational characteristic

Fluid	Max working pressure (bar)	Temperature °C	Flow rate at 6 bar with Δp=1 (Nl/min)	Orifice size (mm)	Working ports size	Pilot ports size
Filtered and lubricated air	10 bar	-5 - +70	120 Nl/min	mm 2,5	M5	M5

Pneumatic - Differential external

3/2

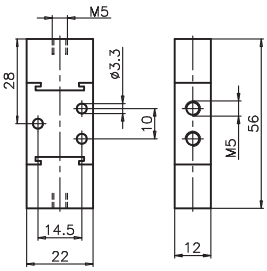

Weight gr. 110
Minimum piloting pressure 2,5 bar

Ordering code

105.T.11.12

T	TYPE
	32 = 3 ways
	52 = 5 ways

5/2

Pneumatic - Differential external

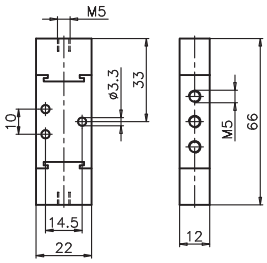

Weight gr. 120
Minimum piloting pressure 2,5 bar

Operational characteristic

Fluid	Max working pressure (bar)	Temperature °C	Flow rate at 6 bar with Δp=1 (Nl/min)	Orifice size (mm)	Working ports size	Pilot ports size
Filtered and lubricated air	10 bar	-5 - +70	120 Nl/min	mm 2,5	M5	M5

1

Pneumatic - Pneumatic | 3/2

Ordering code

105.Ⓣ.11.11

Ⓣ	TYPE
	32 = 3 ways
	52 = 5 ways

5/2 | **Pneumatic - Pneumatic**

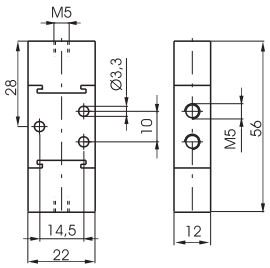

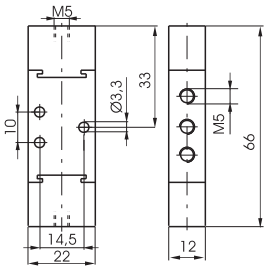

Weight gr. 110
Minimum piloting pressure 2,5 bar

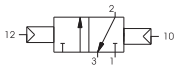

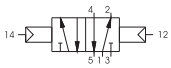

Weight gr. 120
Minimum piloting pressure 2,5 bar

Operational characteristic

Fluid	Max working pressure (bar)	Temperature °C	Flow rate at 6 bar with Δp=1 (Nl/min)	Orifice size (mm)	Working ports size	Pilot ports size
Filtered and lubricated air	10 bar	-5 - +70	120 Nl/min	mm 2,5	M5	M5

Pneumatic - Spring | 3/2 | Ordering code | 5/2 | **Pneumatic - Spring**

805.Ⓣ.11.1

	TYPE
Ⓣ	32 = 3 ways
	52 = 5 ways

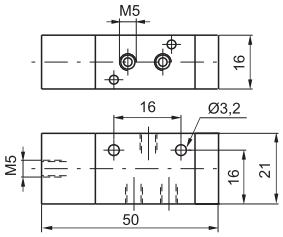

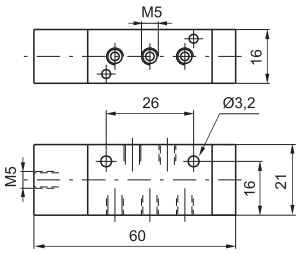

Weight gr. 45
Minimum piloting pressure 2 bar

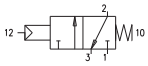

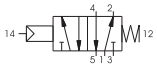

Weight gr. 50
Minimum piloting pressure 2 bar

Operational characteristic

Fluid	Max working pressure (bar)	Temperature °C	Flow rate at 6 bar with Δp=1 (Nl/min)	Orifice size (mm)	Working ports size	Pilot ports size
Filtered and lubricated air	10 bar	-5 - +70	160 Nl/min	mm 2,5	M5	M5

Pneumatic - Differential | 3/2 | Ordering code | 5/2 | **Pneumatic - Differential**

805.Ⓣ.11.12

	TYPE
Ⓣ	32 = 3 ways
	52 = 5 ways

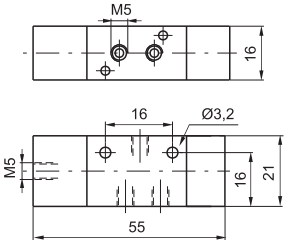

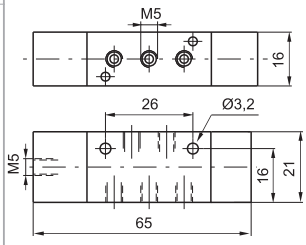

Weight gr. 50
Minimum piloting pressure 2 bar

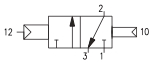

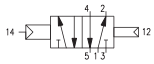

Weight gr. 55
Minimum piloting pressure 2 bar

Operational characteristic

Fluid	Max working pressure (bar)	Temperature °C	Flow rate at 6 bar with Δp=1 (Nl/min)	Orifice size (mm)	Working ports size	Pilot ports size
Filtered and lubricated air	10 bar	-5 - +70	160 Nl/min	mm 2,5	M5	M5

Pneumatic - Pneumatic | 3/2 | Ordering code | 5/2 | **Pneumatic - Pneumatic**

805.Ⓣ.11.11

	TYPE
Ⓣ	32 = 3 ways
	52 = 5 ways

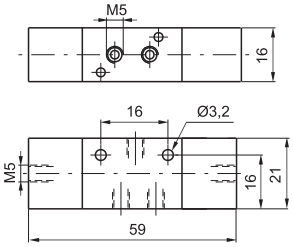

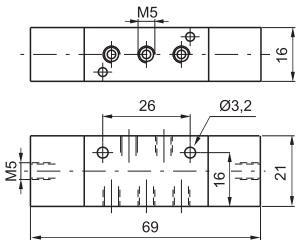

Weight gr. 55
Minimum piloting pressure 1,5 bar

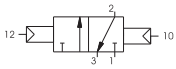

Weight gr. 60
Minimum piloting pressure 1,5 bar

Operational characteristic

Fluid	Max working pressure (bar)	Temperature °C	Flow rate at 6 bar with Δp=1 (Nl/min)	Orifice size (mm)	Working ports size	Pilot ports size
Filtered and lubricated air	10 bar	-5 - +70	160 Nl/min	mm 2,5	M5	M5

1

Pneumatic - Spring

3/2

Ordering code

228.Ⓣ.11.1

	TYPE
Ⓣ	32 = 3 ways
	52 = 5 ways

5/2

Pneumatic - Spring

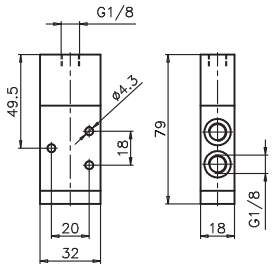

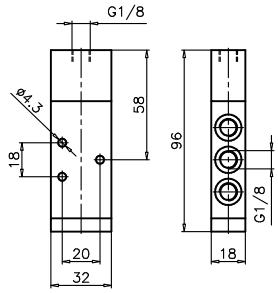

Weight gr. 110
Minimum piloting pressure 2,5 bar

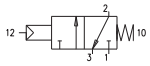

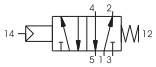

Weight gr. 130
Minimum piloting pressure 2,5 bar

Operational characteristic

Fluid	Max working pressure (bar)	Temperature °C	Flow rate at 6 bar with Δp=1 (Nl/min)	Orifice size (mm)	Working ports size	Pilot ports size
Filtered and lubricated air	10 bar	-5 - +70	540 Nl/min	mm 6	G 1/8"	G 1/8"

Pneumatic - Differential external

3/2

Ordering code

228.Ⓣ.11.12

	TYPE
Ⓣ	32 = 3 ways
	52 = 5 ways

5/2

Pneumatic - Differential external

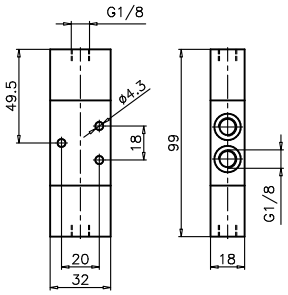

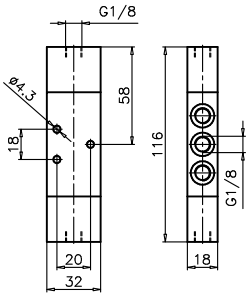

Weight gr. 140
Minimum piloting pressure 2,5 bar

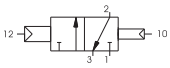

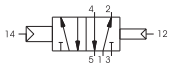

Weight gr. 160
Minimum piloting pressure 2,5 bar

Operational characteristic

Fluid	Max working pressure (bar)	Temperature °C	Flow rate at 6 bar with Δp=1 (Nl/min)	Orifice size (mm)	Working ports size	Pilot ports size
Filtered and lubricated air	10 bar	-5 - +70	540 Nl/min	mm 6	G 1/8"	G 1/8"

Pneumatic - Differential self aligned

3/2

Ordering code

228.Ⓣ.11.12/1

	TYPE
Ⓣ	32 = 3 ways
	52 = 5 ways

5/2

Pneumatic - Differential self aligned

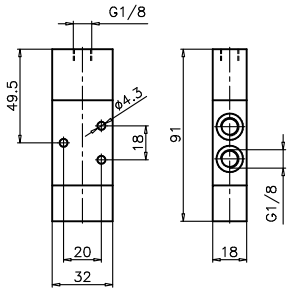

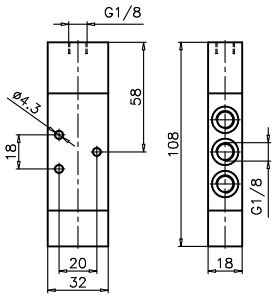

Weight gr. 130
Minimum piloting pressure 2,5 bar

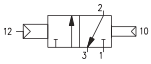

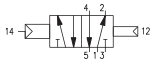

Weight gr. 150
Minimum piloting pressure 2,5 bar

Operational characteristic

Fluid	Max working pressure (bar)	Temperature °C	Flow rate at 6 bar with Δp=1 (Nl/min)	Orifice size (mm)	Working ports size	Pilot ports size
Filtered and lubricated air	10 bar	-5 - +70	540 Nl/min	mm 6	G 1/8"	G 1/8"

Pneumatic - Pneumatic | 3/2 | Ordering code | 5/2 | **Pneumatic - Pneumatic**

228.Ⓣ.11.11

Ⓣ	TYPE
	32 = 3 ways
	52 = 5 ways

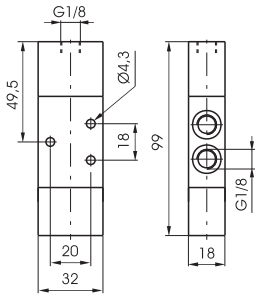

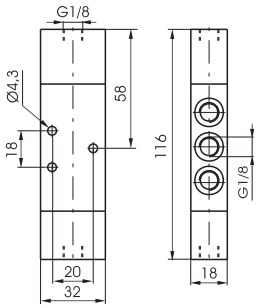

Weight gr. 140
Minimum piloting pressure 2 bar

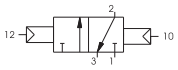

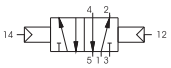

Weight gr. 160
Minimum piloting pressure 2 bar

Operational characteristic

Fluid	Max working pressure (bar)	Temperature °C	Flow rate at 6 bar with Δp=1 (Nl/min)	Orifice size (mm)	Working ports size	Pilot ports size
Filtered and lubricated air	10 bar	-5 - +70	540 Nl/min	mm 6	G 1/8"	G 1/8"

Amplified pneumatic - Spring | 3/2 | Ordering code | 5/2 | **Amplified pneumatic - Spring**

228.Ⓣ.13.1

Ⓣ	TYPE
	32 = 3 ways
	52 = 5 ways

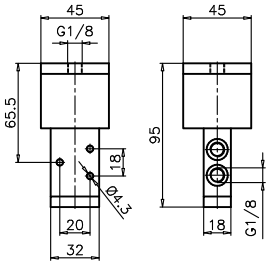

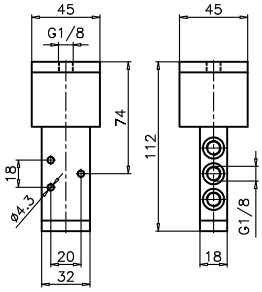

Weight gr. 260
Minimum piloting pressure 0,5 bar

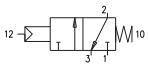

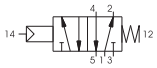

Weight gr. 290
Minimum piloting pressure 0,5 bar

Operational characteristic

Fluid	Max working pressure (bar)	Temperature °C	Flow rate at 6 bar with Δp=1 (Nl/min)	Orifice size (mm)	Working ports size	Pilot ports size
Filtered and lubricated air	10 bar	-5 - +70	540 Nl/min	mm 6	G 1/8"	G 1/8"

Pneumatic - Pneumatic | 5/3

Ordering code

228.53.Ⓕ.11.11

Ⓕ	FUNCTION
	31 = Closed centres
	32 = Open centres
	33 = Pressured centres

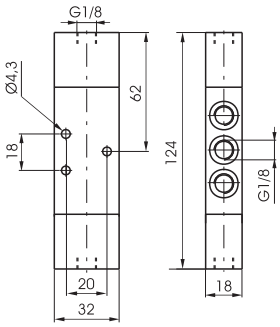

Weight gr. 180
Minimum piloting pressure 3 bar

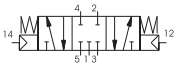

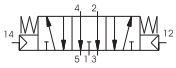

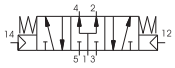

Operational characteristic

Fluid	Max working pressure (bar)	Temperature °C	Flow rate at 6 bar with Δp=1 (Nl/min)	Orifice size (mm)	Working ports size	Pilot ports size
Filtered and lubricated air	10 bar	-5 - +70	410 Nl/min	mm 6	G 1/8"	G 1/8"

1

Pneumatic - Spring | 3/2 | Ordering code | 5/2 | **Pneumatic - Spring**

T228.Ⓣ.11.1

Ⓣ	TYPE
	32 = 3 ways
	52 = 5 ways

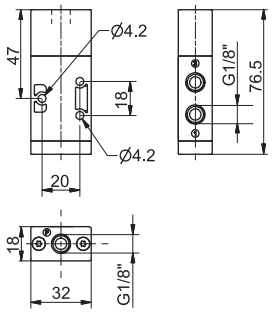

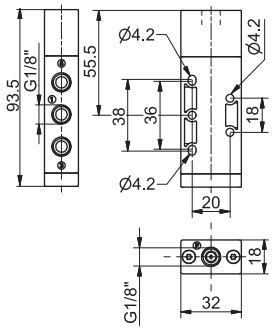

Weight gr. 65
Minimum operating pressure 2,5 bar

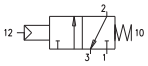

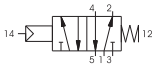

Weight gr. 78
Minimum operating pressure 2,5 bar

Operational characteristic

Fluid	Max working pressure (bar)	Temperature °C		Flow rate at 6 bar with Δp=1 (Nl/min)	Orifice size (mm)	Working ports size	Pilot ports size
Filtered and lubricated air	10 bar	Min.	Max.	620 Nl/min	mm 6	G 1/8"	G 1/8"

Pneumatic - Differential (external) | 3/2 | Ordering code | 5/2 | **Pneumatic - Differential (external)**

T228.Ⓣ.11.12

Ⓣ	TYPE
	32 = 3 ways
	52 = 5 ways

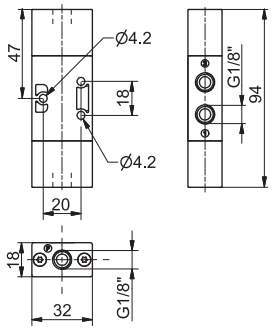

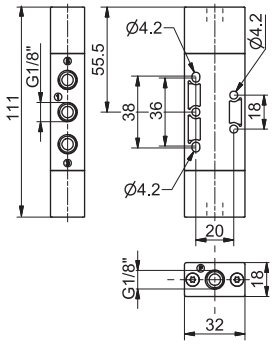

Weight gr. 74
Minimum operating pressure 2,5 bar

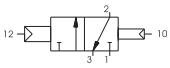

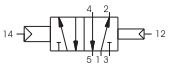

Weight gr. 86
Minimum operating pressure 2,5 bar

Operational characteristic

Fluid	Max working pressure (bar)	Temperature °C		Flow rate at 6 bar with Δp=1 (Nl/min)	Orifice size (mm)	Working ports size	Pilot ports size
Filtered and lubricated air	10 bar	Min.	Max.	620 Nl/min	mm 6	G 1/8"	G 1/8"

Pneumatic - Differential self-feeding | 3/2 | Ordering code | 5/2 | **Pneumatic - Differential self-feeding**

T228.Ⓣ.11.12/1

Ⓣ	TYPE
	32 = 3 ways
	52 = 5 ways

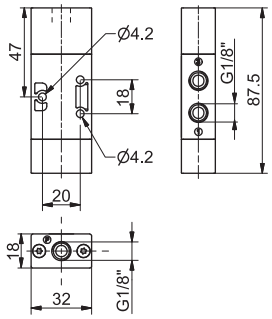

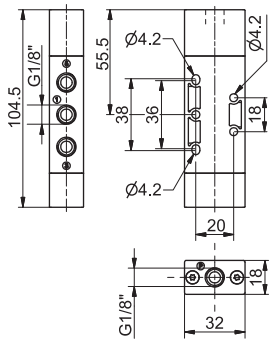

Weight gr. 70
Minimum operating pressure 2,5 bar

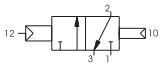

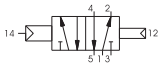

Weight gr. 82
Minimum operating pressure 2,5 bar

Operational characteristic

Fluid	Max working pressure (bar)	Temperature °C		Flow rate at 6 bar with Δp=1 (Nl/min)	Orifice size (mm)	Working ports size	Pilot ports size
Filtered and lubricated air	10 bar	Min.	Max.	620 Nl/min	mm 6	G 1/8"	G 1/8"

Pneumatic - Pneumatic 3/2

Ordering code

T228.Ⓣ.11.11

Ⓣ	TYPE
	32 = 3 ways
	52 = 5 ways

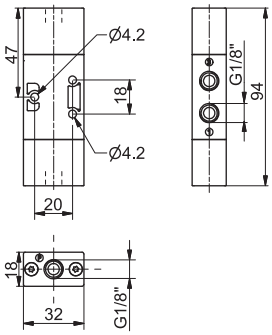

Weight gr. 77
Minimum operating pressure 2 bar

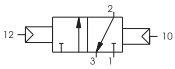

Pneumatic - Pneumatic 5/2

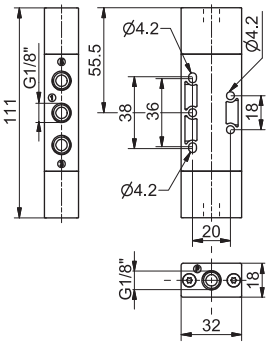

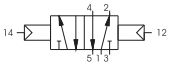

Weight gr. 90
Minimum operating pressure 2 bar

Operational characteristic

Fluid	Max working pressure (bar)	Temperature °C		Flow rate at 6 bar with Δp=1 (Nl/min)	Orifice size (mm)	Working ports size	Pilot ports size
Filtered and lubricated air	10 bar	Min.	Max.	620 Nl/min	mm 6	G 1/8"	G 1/8"

Pneumatic - Pneumatic 3 positions 5/3

Ordering code

T228.53.Ⓕ.11.11

Ⓕ	FUNCTION
	32 = Open Centres
	33 = Pressured Centres

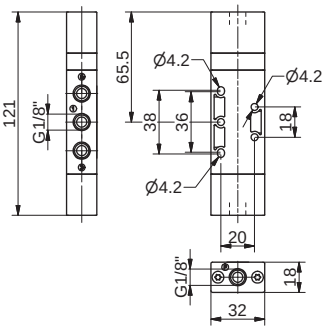

Weight gr. 110
Minimum operating pressure 3 bar

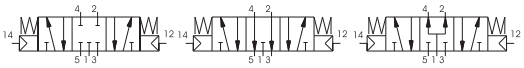

Operational characteristic

Fluid	Max working pressure (bar)	Temperature °C		Flow rate at 6 bar with Δp=1 (Nl/min)	Orifice size (mm)	Working ports size	Pilot ports size
Filtered and lubricated air	10 bar	Min.	Max.	410 Nl/min	mm 6	G 1/8"	G 1/8"

1

Pneumatic - Spring | 3/2 | Ordering code | 5/2 | **Pneumatic - Spring**

T488.Ⓣ.11.1

Ⓣ	TYPE
	32 = 3 ways
	52 = 5 ways

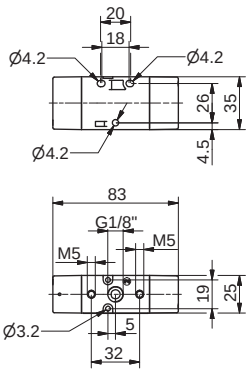

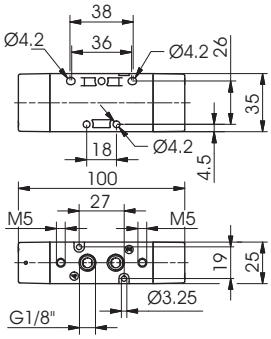

Weight gr. 75
Minimum operating pressure 2,5 bar

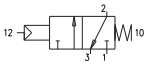

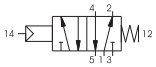

Operational characteristic

Fluid	Max working pressure (bar)	Temperature °C	Flow rate at 6 bar with Δp=1 (Nl/min)	Orifice size (mm)	Working ports size
Filtered and lubricated air	10	-5 - +50	620	6	G 1/8"

Pneumatic - Differential (external) | 3/2 | Ordering code | 5/2 | **Pneumatic - Differential (external)**

T488.Ⓣ.11.12

Ⓣ	TYPE
	32 = 3 ways
	52 = 5 ways

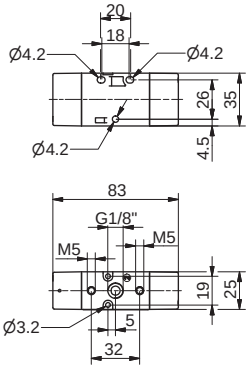

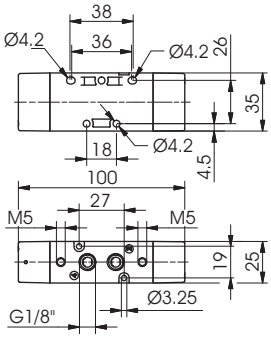

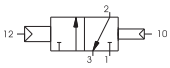

Operational characteristic

Fluid	Max working pressure (bar)	Temperature °C	Flow rate at 6 bar with Δp=1 (Nl/min)	Orifice size (mm)	Working ports size
Filtered and lubricated air	10	-5 - +50	620	6	G 1/8"

Pneumatic - Pneumatic | 3/2 | Ordering code | 5/2 | **Pneumatic - Pneumatic**

T488.Ⓣ.11.11

Ⓣ	TYPE
	32 = 3 ways
	52 = 5 ways

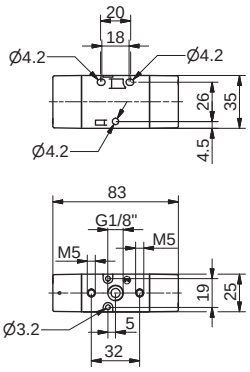

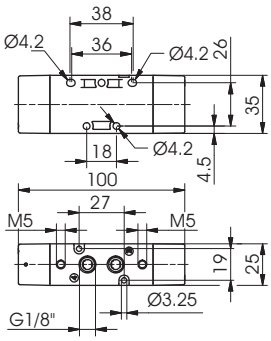

Minimum operating pressure 2 bar (for Pneumatic-Pneumatic version)

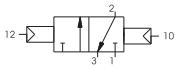

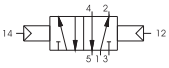

Operational characteristic

Fluid	Max working pressure (bar)	Temperature °C	Flow rate at 6 bar with Δp=1 (Nl/min)	Orifice size (mm)	Working ports size
Filtered and lubricated air	10	-5 - +50	620	6	G 1/8"

Pneumatic - Pneumatic

5/3

1

Ordering code

T488.53.Ⓕ.11.11

	FUNCTION
Ⓕ	32 = Open Centres
	33 = Pressured Centres

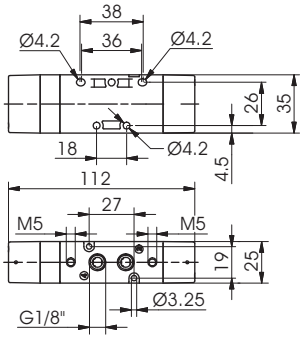

Weight gr. 140
Minimum operating pressure 3 bar

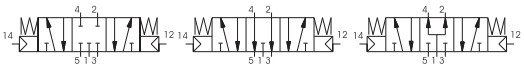

Operational characteristic

Fluid	Max working pressure (bar)	Temperature °C	Flow rate at 6 bar with Δp=1 (Nl/min)	Orifice size (mm)	Working ports size
Filtered and lubricated air	10	-5 - +50	410	6	G 1/8"

1

Pneumatic - Spring | 3/2 | Ordering code | 5/2 | **Pneumatic - Spring**

808.Ⓣ.11.1

	TYPE
Ⓣ	32 = 3 ways
	52 = 5 ways

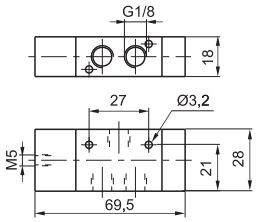

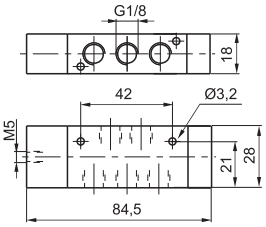

Weight gr. 95
Minimum piloting pressure 2 bar

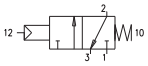

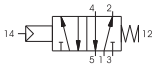

Weight gr. 100
Minimum piloting pressure 2 bar

Operational characteristic

Fluid	Max working pressure (bar)	Temperature °C	Flow rate at 6 bar with Δp=1 (Nl/min)	Orifice size (mm)	Working ports size	Pilot ports size
Filtered and lubricated air	10 bar	-5 - +70	520 Nl/min	mm 4	G 1/8"	M5

Pneumatic - Differential | 3/2 | Ordering code | 5/2 | **Pneumatic - Differential**

808.Ⓣ.11.12

	TYPE
Ⓣ	32 = 3 ways
	52 = 5 ways

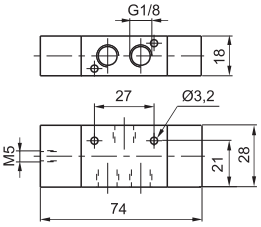

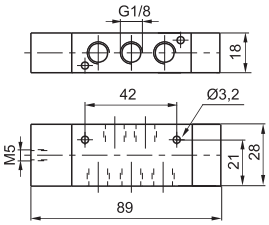

Weight gr. 105
Minimum piloting pressure 2 bar

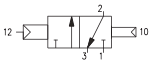

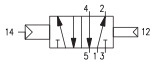

Weight gr. 110
Minimum piloting pressure 2 bar

Operational characteristic

Fluid	Max working pressure (bar)	Temperature °C	Flow rate at 6 bar with Δp=1 (Nl/min)	Orifice size (mm)	Working ports size	Pilot ports size
Filtered and lubricated air	10 bar	-5 - +70	520 Nl/min	mm 4	G 1/8"	M5

Pneumatic - Pneumatic | 3/2 | Ordering code | 5/2 | **Pneumatic - Pneumatic**

808.Ⓣ.11.11

	TYPE
Ⓣ	32 = 3 ways
	52 = 5 ways

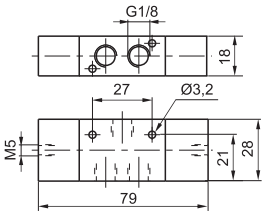

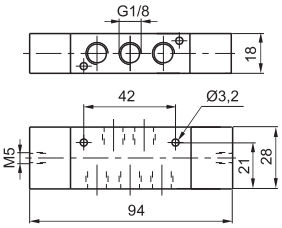

Weight gr. 115
Minimum piloting pressure 1,5 bar

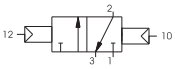

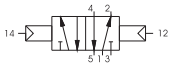

Weight gr. 120
Minimum piloting pressure 1,5 bar

Operational characteristic

Fluid	Max working pressure (bar)	Temperature °C	Flow rate at 6 bar with Δp=1 (Nl/min)	Orifice size (mm)	Working ports size	Pilot ports size
Filtered and lubricated air	10 bar	-5 - +70	520 Nl/min	mm 4	G 1/8"	M5

Manifolds

Ordering code

808.Ⓝ

	N. POSITIONS
Ⓝ	02 = 2 pos. (weight gr. 180)
	03 = 3 pos. (weight gr. 245)
	04 = 4 ports (weight gr. 310)
	05 = 5 pos. (weight gr. 375)
	06 = 6 pos. (weight gr. 440)
	07 = 7 pos. (weight gr. 500)
	08 = 8 pos. (weight gr. 560)
	09 = 9 pos. (weight gr. 620)
	10 = 10 pos. (weight gr. 680)

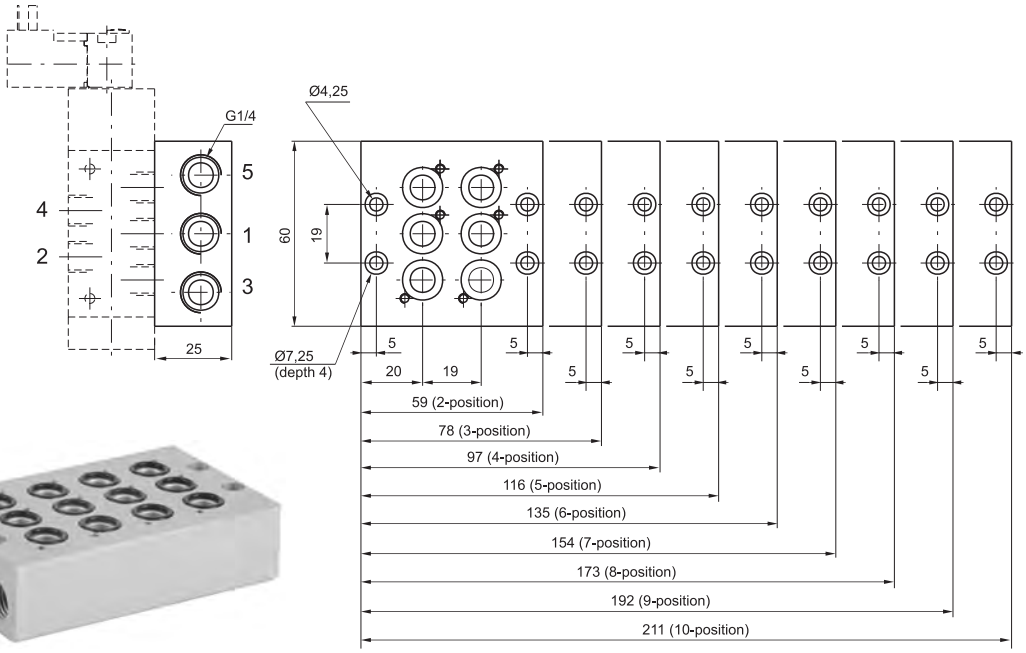

Clip

Ordering code

800.00

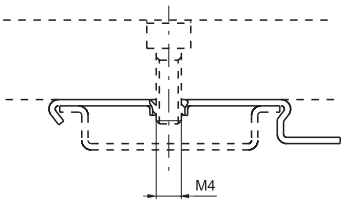

Weight gr. 5
(for mounting the distributors groups on guide DIN 46277/3)

Closing plate

Ordering code

808.00

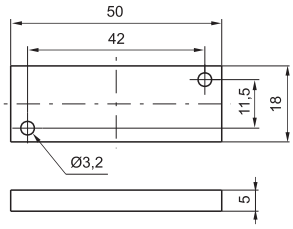

Weight gr. 65

1

Pneumatic - Spring | 3/2 | Ordering code | 5/2 | **Pneumatic - Spring**

224.Ⓣ.11.1

Ⓣ	TYPE
	32 = 3 ways
	52 = 5 ways

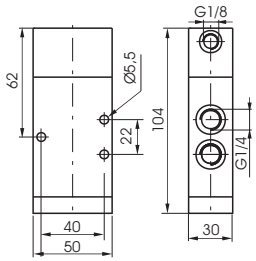

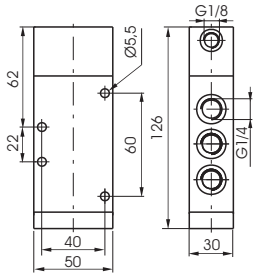

Weight gr. 370
Minimum piloting pressure 2,5 bar

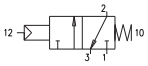

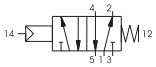

Weight gr. 450
Minimum piloting pressure 2,5 bar

Operational characteristic

Fluid	Max working pressure (bar)	Temperature °C	Flow rate at 6 bar with Δp=1 (Nl/min)	Orifice size (mm)	Working ports size	Pilot ports size
Filtered and lubricated air	10 bar	-5 - +70	1360 Nl/min	mm 8	G 1/4"	G 1/8"

Pneumatic - Differential external | 3/2 | Ordering code | 5/2 | **Pneumatic - Differential external**

224.Ⓣ.11.12

Ⓣ	TYPE
	32 = 3 ways
	52 = 5 ways

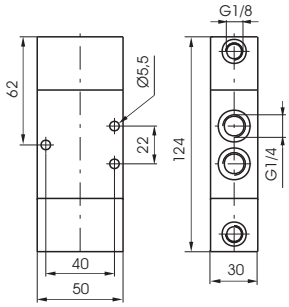

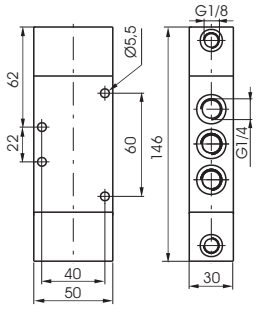

Weight gr. 480
Minimum piloting pressure 2,5 bar

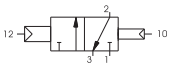

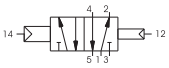

Weight gr. 550
Minimum piloting pressure 2,5 bar

Operational characteristic

Fluid	Max working pressure (bar)	Temperature °C	Flow rate at 6 bar with Δp=1 (Nl/min)	Orifice size (mm)	Working ports size	Pilot ports size
Filtered and lubricated air	10 bar	-5 - +70	1360 Nl/min	mm 8	G 1/4"	G 1/8"

Pneumatic - Pneumatic | 3/2 | Ordering code | 5/2 | **Pneumatic - Pneumatic**

224.Ⓣ.11.11

Ⓣ	TYPE
	32 = 3 ways
	52 = 5 ways

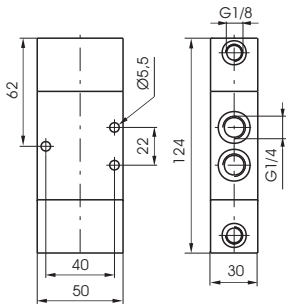

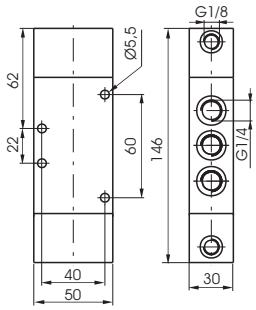

Weight gr. 470
Minimum piloting pressure 2 bar

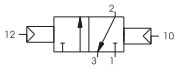

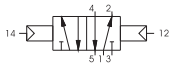

Weight gr. 540
Minimum piloting pressure 2 bar

Operational characteristic

Fluid	Max working pressure (bar)	Temperature °C	Flow rate at 6 bar with Δp=1 (Nl/min)	Orifice size (mm)	Working ports size	Pilot ports size
Filtered and lubricated air	10 bar	-5 - +70	1360 Nl/min	mm 8	G 1/4"	G 1/8"

Pneumatic - Pneumatic

5/3

1

Ordering code	
224.53.Ⓕ.11.11	
Ⓕ	FUNCTION
	31 = Closed centres
	32 = Open centres
	33 = Pressured centres

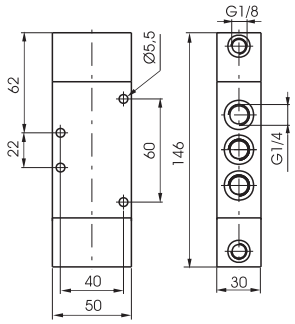

Weight gr. 550
Minimum piloting pressure 3 bar

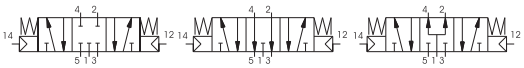

Operational characteristic

Fluid	Max working pressure (bar)	Temperature °C	Flow rate at 6 bar with Δp=1 (Nl/min)	Orifice size (mm)	Working ports size	Pilot ports size
Filtered and lubricated air	10 bar	-5 - +70	1280 Nl/min	mm 8	G 1/4"	G 1/8"

1

Pneumatic - Spring | 3/2 | Ordering code | 5/2 | **Pneumatic - Spring**

T224.Ⓣ.11.1

Ⓣ	TYPE
	32 = 3 ways
	52 = 5 ways

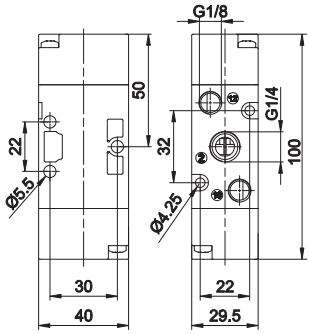

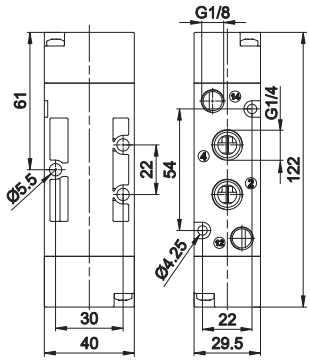

Weight gr. 110
Minimum operating pressure 2,5 bar

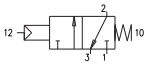

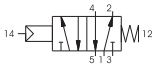

Weight gr. 140
Minimum operating pressure 2,5 bar

Operational characteristic

Fluid	Max working pressure (bar)	Temperature °C		Flow rate at 6 bar with Δp=1 (Nl/min)	Ø Orifice size (mm)	Working ports size	Pilot ports size
Filtered and lubricated air	10 bar	Min.	Max.	1050 Nl/min	mm 8,5	G 1/4"	G 1/8"

Pneumatic - Differential (external) | 3/2 | Ordering code | 5/2 | **Pneumatic - Differential (external)**

T224.Ⓣ.11.12

Ⓣ	TYPE
	32 = 3 ways
	52 = 5 ways

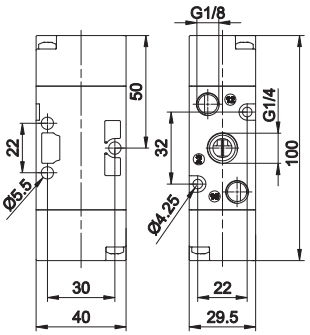

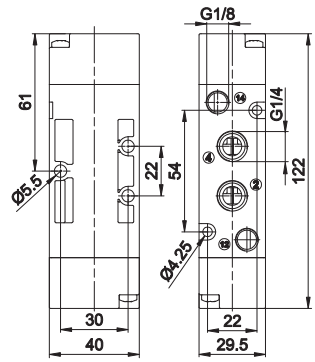

Weight gr. 110
Minimum operating pressure 2 bar

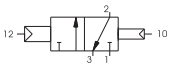

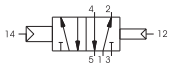

Weight gr. 140
Minimum operating pressure 2 bar

Operational characteristic

Fluid	Max working pressure (bar)	Temperature °C		Flow rate at 6 bar with Δp=1 (Nl/min)	Ø Orifice size (mm)	Working ports size	Pilot ports size
Filtered and lubricated air	10 bar	Min.	Max.	1050 Nl/min	mm 8,5	G 1/4"	G 1/8"

Pneumatic - Pneumatic | 3/2 | Ordering code | 5/2 | **Pneumatic - Pneumatic**

T224.Ⓣ.11.11

Ⓣ	TYPE
	32 = 3 ways
	52 = 5 ways

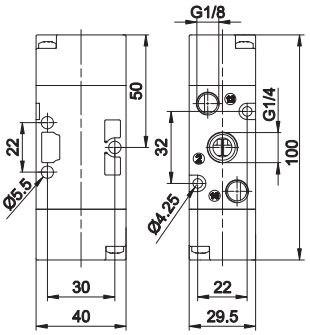

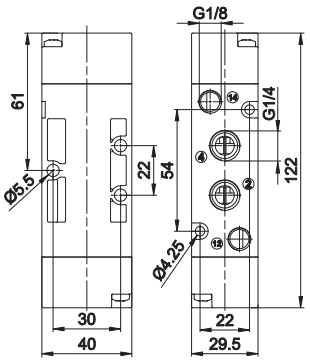

Weight gr. 110
Minimum operating pressure 2 bar

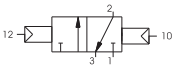

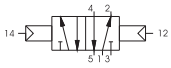

Weight gr. 140
Minimum operating pressure 2 bar

Operational characteristic

Fluid	Max working pressure (bar)	Temperature °C		Flow rate at 6 bar with Δp=1 (Nl/min)	Ø Orifice size (mm)	Working ports size	Pilot ports size
Filtered and lubricated air	10 bar	Min.	Max.	1050 Nl/min	mm 8,5	G 1/4"	G 1/8"

Pneumatic - Pneumatic 3 positions

5/3

1

Ordering code

T224.53.Ⓕ.11.11

Ⓕ	FUNCTION
	31 = Closed centres
	32 = Open centres
	33 = Pressured centres

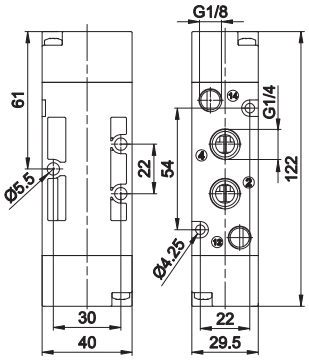

Weight gr. 160
Minimum operating pressure 3 bar

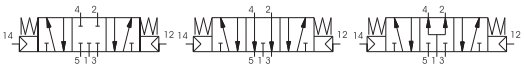

Operational characteristic

Fluid	Max working pressure (bar)	Temperature °C		Flow rate at 6 bar with Δp=1 (Nl/min)	Ø Orifice size (mm)	Working ports size	Pilot ports size
Filtered and lubricated air	10 bar	Min.	Max.	900 Nl/min	mm 8,5	G 1/4"	G 1/8"

1

Pneumatic - Spring | 3/2 | Ordering code | 5/2 | **Pneumatic - Spring**

212.Ⓣ.11.1

Ⓣ	TYPE
	32 = 3 ways
	52 = 5 ways

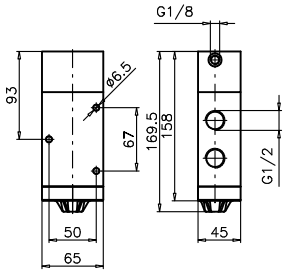

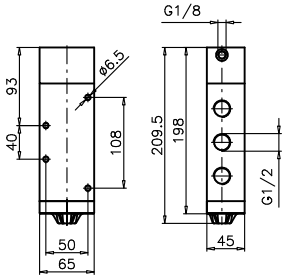

Weight gr. 1110
Minimum piloting pressure 2,5 bar

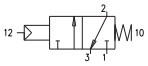

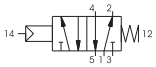

Weight gr. 1390
Minimum piloting pressure 2,5 bar

Operational characteristic

Fluid	Max working pressure (bar)	Temperature °C	Flow rate at 6 bar with Δp=1 (Nl/min)	Orifice size (mm)	Working ports size	Pilot ports size
Filtered and lubricated air	10 bar	-5 - +70	3500 Nl/min	mm 15	G 1/2"	G 1/8"

Pneumatic - Differential external | 3/2 | Ordering code | 5/2 | **Pneumatic - Differential external**

212.Ⓣ.11.12

Ⓣ	TYPE
	32 = 3 ways
	52 = 5 ways

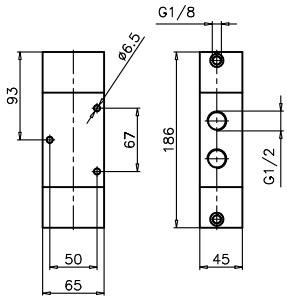

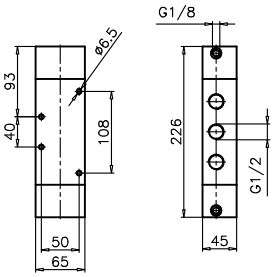

Weight gr. 1380
Minimum piloting pressure 2,5 bar

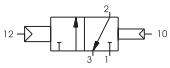

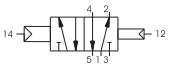

Weight gr. 1660
Minimum piloting pressure 2,5 bar

Operational characteristic

Fluid	Max working pressure (bar)	Temperature °C	Flow rate at 6 bar with Δp=1 (Nl/min)	Orifice size (mm)	Working ports size	Pilot ports size
Filtered and lubricated air	10 bar	-5 - +70	3500 Nl/min	mm 15	G 1/2"	G 1/8"

Pneumatic - Pneumatic | 3/2 | Ordering code | 5/2 | **Pneumatic - Pneumatic**

212.Ⓣ.11.11

Ⓣ	TYPE
	32 = 3 ways
	52 = 5 ways

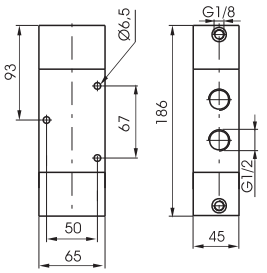

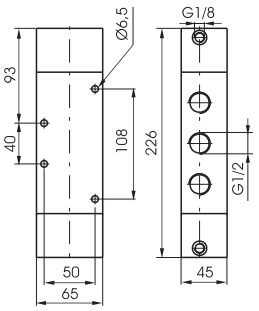

Weight gr. 1350
Minimum piloting pressure 2 bar

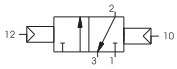

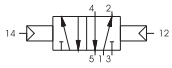

Weight gr. 1630
Minimum piloting pressure 2 bar

Operational characteristic

Fluid	Max working pressure (bar)	Temperature °C	Flow rate at 6 bar with Δp=1 (Nl/min)	Orifice size (mm)	Working ports size	Pilot ports size
Filtered and lubricated air	10 bar	-5 - +70	3500 Nl/min	mm 15	G 1/2"	G 1/8"

Pneumatic - Pneumatic

5/3

1

Ordering code

212.53.Ⓣ.11.11

	FUNCTION
Ⓕ	31 = Closed centres
	32 = Open centres
	33 = Pressured centres

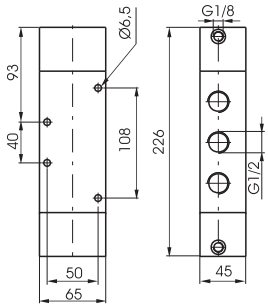

Weight gr. 1650
Minimum piloting pressure 3 bar

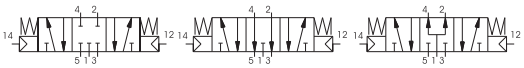

Operational characteristic

Fluid	Max working pressure (bar)	Temperature °C	Flow rate at 6 bar with Δp=1 (Nl/min)	Orifice size (mm)	Working ports size	Pilot ports size
Filtered and lubricated air	10 bar	-5 - +70	3000 Nl/min	mm 15	G 1/2"	G 1/8"

1

Pneumatic - Spring | 3/2 | Ordering code | 5/2 | **Pneumatic - Spring**

212/2.Ⓣ.11.1

Ⓣ	TYPE
	32 = 3 ways
	52 = 5 ways

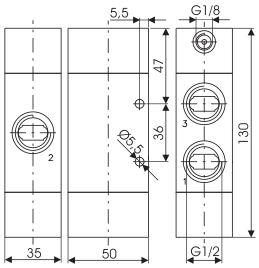

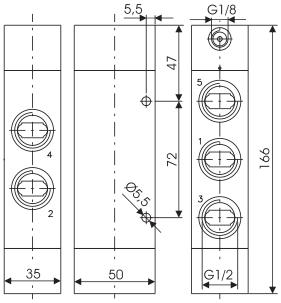

Weight gr. 524
Minimum piloting pressure 2,5 bar

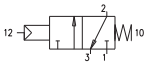

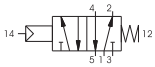

Weight gr. 644
Minimum piloting pressure 2,5 bar

Operational characteristic

Fluid	Max working pressure (bar)	Temperature °C	Flow rate at 6 bar with Δp=1 (Nl/min)	Orifice size (mm)	Working ports size	Pilot ports size
Filtered and lubricated air	10 bar	-5 - +70	3600 Nl/min	mm 15	G 1/2"	G 1/8"

Pneumatic - Differential | 3/2 | Ordering code | 5/2 | **Pneumatic - Differential**

Diff. external - Normally closed | *Diff. external*

212/2.Ⓣ.11.12

Ⓣ	TYPE
	32 = 3 ways
	52 = 5 ways

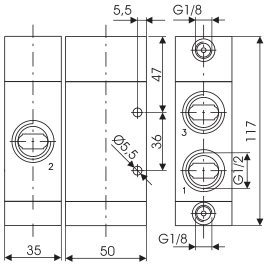

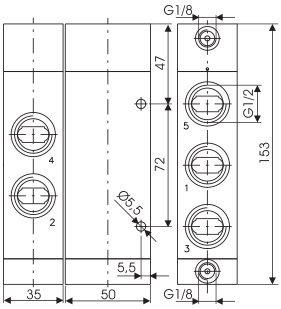

Weight gr. 464
Minimum piloting pressure 2,5 bar

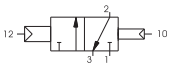

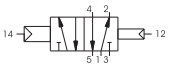

Weight gr. 586
Minimum piloting pressure 2,5 bar

Operational characteristic

Fluid	Max working pressure (bar)	Temperature °C	Flow rate at 6 bar with Δp=1 (Nl/min)	Orifice size (mm)	Working ports size	Pilot ports size
Filtered and lubricated air	10 bar	-5 - +70	3600 Nl/min	mm 15	G 1/2"	G 1/8"

Pneumatic - Differential | 3/2 | Ordering code | 5/2 | **Pneumatic - Differential**

Diff. self aligned | *Diff. self aligned*

212/2.Ⓣ.11.12/Ⓕ

Ⓣ	TYPE
	32 = 3 ways
	52 = 5 ways
Ⓕ	FUNCTION
	1.C = 3 ways Normally Closed
	1.A = 3 ways Normally Open
	1 = 5 ways diff. self aligned

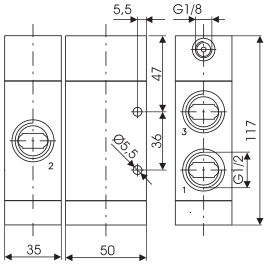

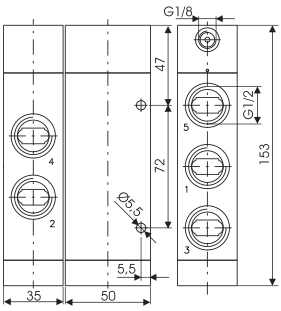

Weight gr. 466
Minimum piloting pressure 2,5 bar

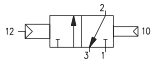

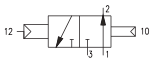

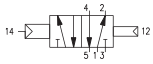

Weight gr. 588
Minimum piloting pressure 2,5 bar

Operational characteristic

Fluid	Max working pressure (bar)	Temperature °C	Flow rate at 6 bar with Δp=1 (Nl/min)	Orifice size (mm)	Working ports size	Pilot ports size
Filtered and lubricated air	10 bar	-5 - +70	3600 Nl/min	mm 15	G 1/2"	G 1/8"

Pneumatic - Pneumatic 3/2

Ordering code

212/2.Ⓣ.11.11

Ⓣ	TYPE
	32 = 3 ways
	52 = 5 ways

5/2 **Pneumatic - Pneumatic**

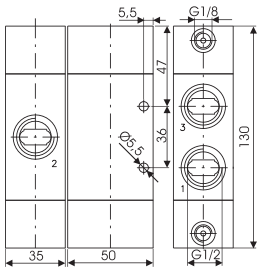

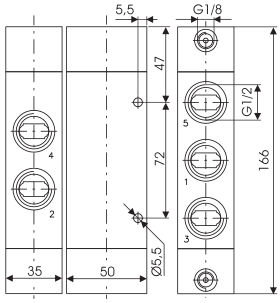

Weight gr. 518
Minimum piloting pressure 2,5 bar

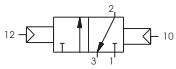

Weight gr. 640
Minimum piloting pressure 2,5 bar

Operational characteristic

Fluid	Max working pressure (bar)	Temperature °C	Flow rate at 6 bar with Δp=1 (Nl/min)	Orifice size (mm)	Working ports size	Pilot ports size
Filtered and lubricated air	10 bar	-5 - +70	3600 Nl/min	mm 15	G 1/2"	G 1/8"

Pneumatic - Pneumatic 5/3

Ordering code

212/2.53.Ⓕ.11.11

Ⓕ	FUNCTION
	31 = Closed centres
	32 = Open centres
	33 = Pressured centres

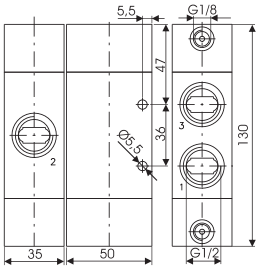

Weight gr. 684
Minimum piloting pressure 3 bar

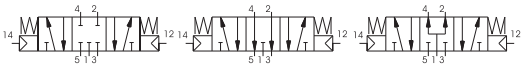

Operational characteristic

Fluid	Max working pressure (bar)	Temperature °C	Flow rate at 6 bar with Δp=1 (Nl/min)	Orifice size (mm)	Working ports size	Pilot ports size
Filtered and lubricated air	10 bar	-5 - +70	3300 Nl/min	mm 15	G 1/2"	G 1/8"

1

Pneumatic - Spring | 3/2 | Ordering code | 5/2 | **Pneumatic - Spring**

211.Ⓣ.11.1

Ⓣ	TYPE
	32 = 3 ways
	52 = 5 ways

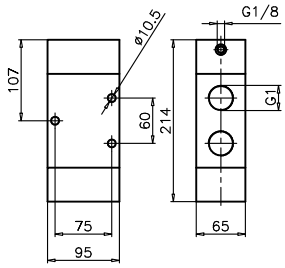

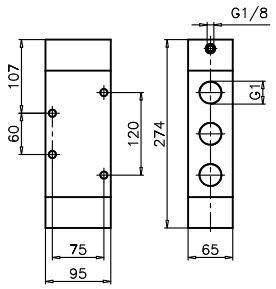

Weight gr. 3330
Minimum piloting pressure 2,5 bar

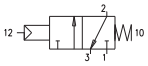

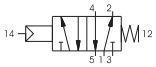

Weight gr. 4200
Minimum piloting pressure 2,5 bar

Operational characteristic

Fluid	Max working pressure (bar)	Temperature °C	Flow rate at 6 bar with Δp=1 (Nl/min)	Orifice size (mm)	Working ports size	Pilot ports size
Filtered and lubricated air	10 bar	-5 - +70	6500 Nl/min	mm 20	G 1"	G 1/8"

Pneumatic - Differential external | 3/2 | Ordering code | 5/2 | **Pneumatic - Differential external**

211.Ⓣ.11.12

Ⓣ	TYPE
	32 = 3 ways
	52 = 5 ways

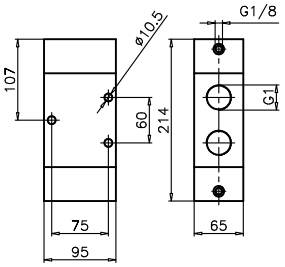

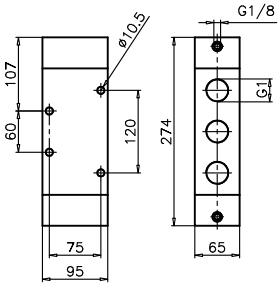

Weight gr. 3330
Minimum piloting pressure 2,5 bar

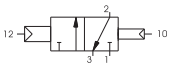

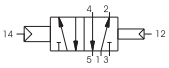

Weight gr. 4200
Minimum piloting pressure 2,5 bar

Operational characteristic

Fluid	Max working pressure (bar)	Temperature °C	Flow rate at 6 bar with Δp=1 (Nl/min)	Orifice size (mm)	Working ports size	Pilot ports size
Filtered and lubricated air	10 bar	-5 - +70	6500 Nl/min	mm 20	G 1"	G 1/8"

Pneumatic - Pneumatic | 3/2 | Ordering code | 5/2 | **Pneumatic - Pneumatic**

211.Ⓣ.11.11

Ⓣ	TYPE
	32 = 3 ways
	52 = 5 ways

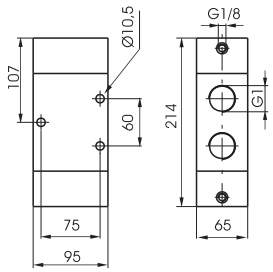

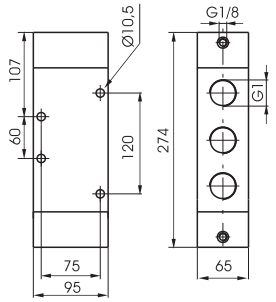

Weight gr. 3330
Minimum piloting pressure 2 bar

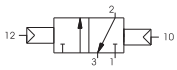

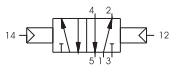

Weight gr. 4200
Minimum piloting pressure 2 bar

Operational characteristic

Fluid	Max working pressure (bar)	Temperature °C	Flow rate at 6 bar with Δp=1 (Nl/min)	Orifice size (mm)	Working ports size	Pilot ports size
Filtered and lubricated air	10 bar	-5 - +70	6500 Nl/min	mm 20	G 1"	G 1/8"

Pneumatic - Pneumatic

5/3

1

Ordering code

211.53.Ⓕ.11.11

	FUNCTION
Ⓕ	31 = Closed centres
	32 = Open centres
	33 = Pressured centres

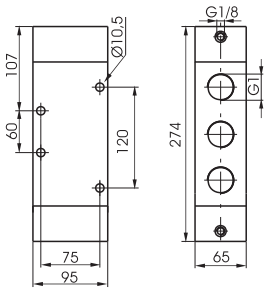

Weight gr. 4200
Minimum piloting pressure 3 bar

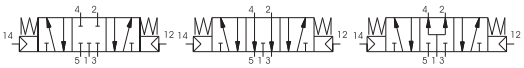

Operational characteristic

Fluid	Max working pressure (bar)	Temperature °C	Flow rate at 6 bar with Δp=1 (Nl/min)	Orifice size (mm)	Working ports size	Pilot ports size
Filtered and lubricated air	10 bar	-5 - +70	6500 Nl/min	mm 20	G 1"	G 1/8"

ACCESSORIES

Accessories M5 - G1" (Series 600)

Flow control valves / Quick exhaust valves / Exhaust flow control valves Shuttle valves / Silencers / Check valves / Manifolds /Block valves / Gang mounting manifolds / Economizers

Complementary valves (Series 900)

Pressure switches / Impulse generators / Timers / Two hands safety valve / Valve / Oscillator valve / Signal amplifier / Progressive start up valve

Blocking valves G1/8" ÷ G1/2" (Series 50 - T50)

Function Fittings (Series 55)
Flow regulator / In line pressure regulator / Pressure regulator / Blocking valve / Circuit selector valve - OR - AND / Quick exhaust valve / Pressure indicator / In line progressive star-up valve / 90° progressive star-up valve / In line blocking valve + flow control valve / 90° blocking valve + flow control valve / In line blocking valve + quick exhaust valve / In line pressure regulator + pressure indicator / 90° pressure regulator + pressure indicator / Accessories / Connections

Miniaturised pressure regulators (Series 1750-1760)

Compact fittings for lubrication (Series Mini-RAP)
RDR Straight male adaptor (parallel) / RDR Straight male adaptor (parallel) / RGR Complete single banjo with stem / RGR Complete single banjo with stem

General

These accessories are a range of devices for completing a pneumatic circuit. These valves, with their special functions, are inserted between two valves, between a valve and a cylinder, or following a cylinder.

One of the particular characteristic of these accessories is that they are automatically actuated without the need for external commands. Usually, operation and idle are controlled by the presence or absence of pressure as, for example, in the case of quick exhaust valves which pilots itself as a selector, changing the flow direction as the signal goes off and on.

On the other hand, other components are inert. That is, they do not have any internal variable function which is sensitive to pressure. Among these components are silencers, manifolds and flow regulators.

There are also the flow regulators, which like electronic components, can be defined as variable resistences. They are fundamental in regulating the flow rate, provide precise timings and regulate the cylinders' speed.

The selector valves, with "AND" and "OR" functions, are logic functions components which often are an essential element. Furthermore, they are built to allow high flow rate which cannot be obtained by classic pneumatic logic.

The block valves lock the cylinder in a position, avoiding unexpected depressurization of the cylinder's chamber due to lack of compressed air at the inlet port. Practically, it is a piloted unidirectional valve that blocks the exhaust port when there is no air in the pilot circuit.

Finally the economizer valves are in fact a pressure reducer valves installed between valve and cylinder for reducing the air consumption. For example this is applicable on the cylinder return stroke without penalizing the exhaust as happens with FRL pressure regulator.

Construction characteristics

We have not listed all different materials used for the construction of these components because the list would be too the long. We use corrosion proof material, brass or anodized aluminium and the most appropriate specific mixture for seals. If more information is required please contact our technical department.

Use and maintenance

In operation pay attention to the minimum and maximum criteria for temperature and pressure, and ensure good quality compressed air. In a dirty environment, protect the exhaust ports. In this case, maintenance is minimal and is necessary only if the air is particularly dirty. The components most subject to damage by the accumulation of dirt are flow regulators with fine regulation and silencers. As for regulators, follow the normal procedure for disassembling, washing with non-chemical cleaning agents and remounting. The silencers need only to be rinsed in petrol or solvent and blown dry with compressed air.

The number of requests for spare seals for flow regulators and shuttle valves are statistically irrelevant. More often, it is necessary to replace the lining of the quick exhaust because of the wear it undergoes due to the particular conditions of operating.

ATTENTION: for lubrication use class H hydraulic oils, for example Castrol MAGNA GC 32.

1

MIniature flow control valve M5 - Ø3 tube

Ordering code
6.01.305.F

F	FUNCTION
	1.2 = Unidirectional
	2.1 = Unidirectional
	1.1 = Bidirectional

Weight gr. 14

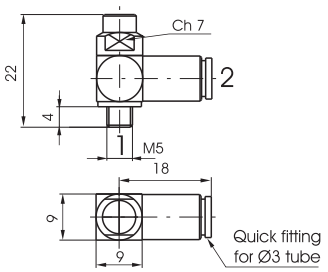

Operational characteristics			
Fluid	Max working pressure (bar)	Temperature °C	Orifice size (mm)
Filtered air	10 bar	-5 - +70	mm. 1,5

MIniature flow control valve M5 - Ø3 tube, with adjustement knob

Ordering code
6.01.305.FP

F	FUNCTION
	1.2 = Unidirectional
	2.1 = Unidirectional
	1.1 = Bidirectional

Weight gr. 16

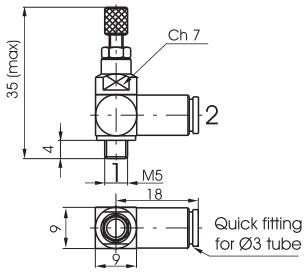

Operational characteristics			
Fluid	Max working pressure (bar)	Temperature °C	Orifice size (mm)
Filtered air	10 bar	-5 - +70	mm. 1,5

MIniature flow control valve M5 - Ø3,17 tube

Ordering code
6.01.315.F

F	FUNCTION
	1.2 = Unidirectional
	2.1 = Unidirectional
	1.1 = Bidirectional

Weight gr. 14

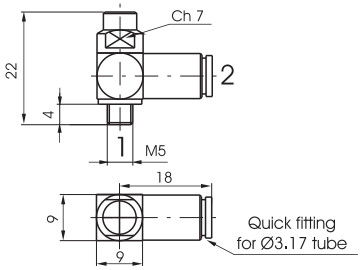

Operational characteristics			
Fluid	Max working pressure (bar)	Temperature °C	Orifice size (mm)
Filtered air	10 bar	-5 - +70	mm. 1,5

MIniature flow control valve M5 - Ø3,17 tube, with adjustement knob

Ordering code
6.01.315.FP

F	FUNCTION
	1.2 = Unidirectional
	2.1 = Unidirectional
	1.1 = Bidirectional

Weight gr. 16

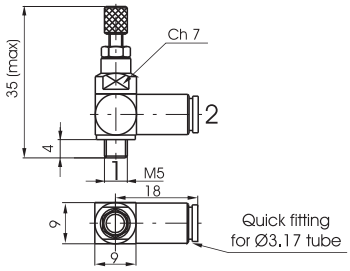

Operational characteristics			
Fluid	Max working pressure (bar)	Temperature °C	Orifice size (mm)
Filtered air	10 bar	-5 - +70	mm. 1,5

1

MIniature flow control valve M5 - Ø4 tube

Ordering code	
6.01.45.F	
F	FUNCTION
	1.2 = Unidirectional
	2.1 = Unidirectional
	1.1 = Bidirectional

Weight gr. 14

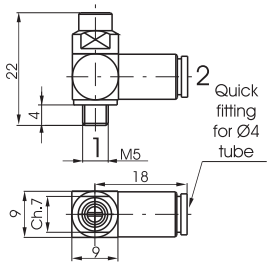

Operational characteristics			
Fluid	Max working pressure (bar)	Temperature °C	Orifice size (mm)
Filtered air	10 bar	-5 - +70	mm. 1,5

MIniature flow control valve M5 - Ø4 tube, with adjustement knob

Ordering code	
6.01.45.FP	
F	FUNCTION
	1.2 = Unidirectional
	2.1 = Unidirectional
	1.1 = Bidirectional

Weight gr. 16

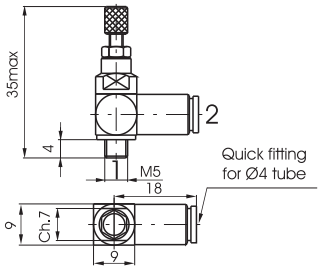

Operational characteristics			
Fluid	Max working pressure (bar)	Temperature °C	Orifice size (mm)
Filtered air	10 bar	-5 - +70	mm. 1,5

Flow control valve M5 - in line ports

Ordering code	
6.01.F	
F	FUNCTION
	05 = Unidirectional
	05/2 = Bidirectional

Weight gr. 48

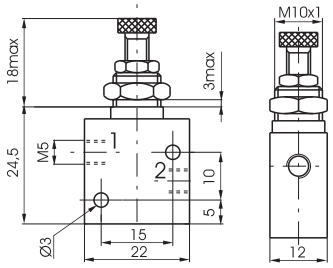

Operational characteristics			
Fluid	Max working pressure (bar)	Temperature °C	Orifice size (mm)
Filtered air	10 bar	-5 - +70	mm. 2

Flow control valve M5 - port at 90°

Ordering code	
6.01.05.F	
F	FUNCTION
	90 = Unidirectional
	90/2 = Bidirectional

Weight gr. 48

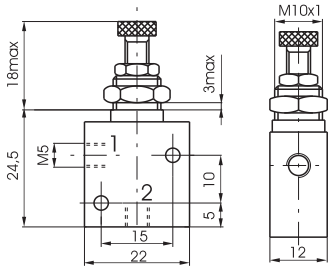

Operational characteristics			
Fluid	Max working pressure (bar)	Temperature °C	Orifice size (mm)
Filtered air	10 bar	-5 - +70	mm. 2

Flow control valve M5 - with a through bolt

Ordering code	
6.01.05.Ⓕ	
Ⓕ	FUNCTION
	180 = Unidirectional
	180/2 = Bidirectional

Weight gr. 52

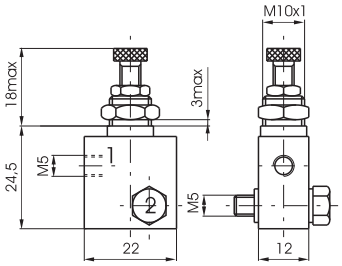

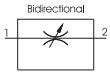

Operational characteristics			
Fluid	Max working pressure (bar)	Temperature °C	Orifice size (mm)
Filtered air	10 bar	-5 - +70	mm. 2

Flow control valve G1/8" - ultrasensitive

Ordering code	
6.01.18/Ⓕ	
Ⓕ	FUNCTION
	4 = Unidirectional
	5 = Bidirectional

Weight gr. 100

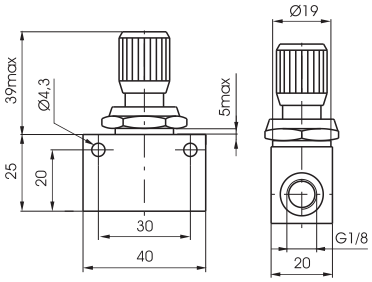

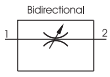

Operational characteristics			
Fluid	Max working pressure (bar)	Temperature °C	Orifice size (mm)
Filtered air	10 bar	-5 - +70	mm. 3

Flow control valve G1/8" - ultrasensitive with lock nut

Ordering code	
6.01.18/Ⓕ	
Ⓕ	FUNCTION
	6 = Unidirectional
	7 = Bidirectional

Weight gr. 105

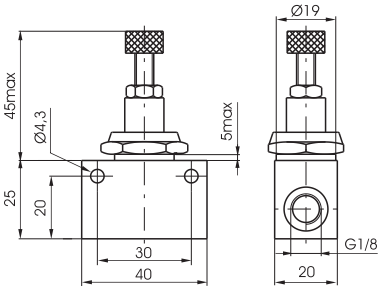

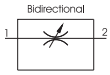

Operational characteristics			
Fluid	Max working pressure (bar)	Temperature °C	Orifice size (mm)
Filtered air	10 bar	-5 - +70	mm. 3

Flow control valve G1/8"

Ordering code	
6.01.Ⓕ	
Ⓕ	FUNCTION
	18N = Unidirectional
	18NE = Unidir. economic vers.
	18/1N = Bidirectional
	18/1NE = Bidir. economic vers.

Weight gr. 50

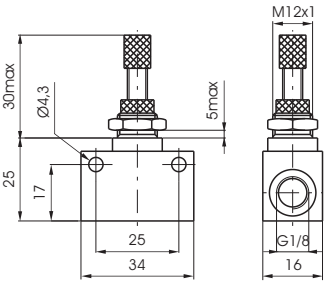

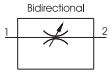

Operational characteristics			
Fluid	Max working pressure (bar)	Temperature °C	Orifice size (mm)
Filtered air	10 bar	-5 - +70	mm. 4

Flow control valve G1/4" - compact type - unidirectional

Ordering code
6.01.14/1

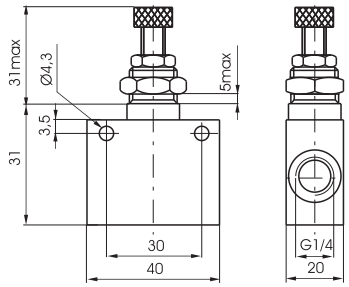

Weight gr. 100

Operational characteristics			
Fluid	Max working pressure (bar)	Temperature °C	Orifice size (mm)
Filtered air	10 bar	-5 - +70	mm. 5,5

Flow control valve G1/4"

Ordering code
6.01.Ⓕ
Ⓕ FUNCTION
14N = Unidirectional
14/1N = Bidirectional

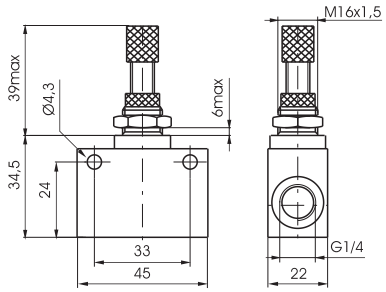

Weight gr. 105

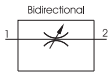

Operational characteristics			
Fluid	Max working pressure (bar)	Temperature °C	Orifice size (mm)
Filtered air	10 bar	-5 - +70	mm. 7

Flow control valve G1/2"

Ordering code
6.01.Ⓕ
Ⓕ FUNCTION
12N = Unidirectional
12/1N = Bidirectional

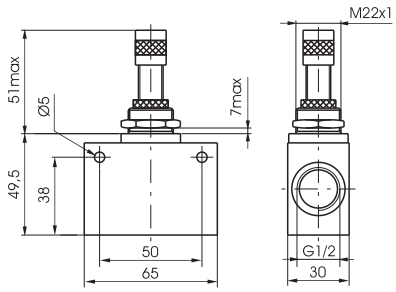

Weight gr. 290

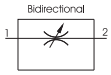

Operational characteristics			
Fluid	Max working pressure (bar)	Temperature °C	Orifice size (mm)
Filtered air	10 bar	-5 - +70	mm. 12

Flow control valve G3/4" - unidirectional

Ordering code
06:01:34

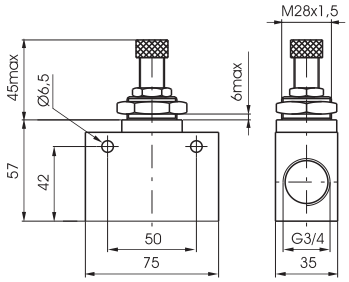

Weight gr. 500

Operational characteristics			
Fluid	Max working pressure (bar)	Temperature °C	Orifice size (mm)
Filtered air	10 bar	-5 - +70	mm. 12

Quick exhaust valve

Ordering code

6.02.❶

❶	CONNECTION
	05 = M5
	18 = G 1/8"
	14 =G 1/4"
	12 = G 1/2"

Weight "see table"

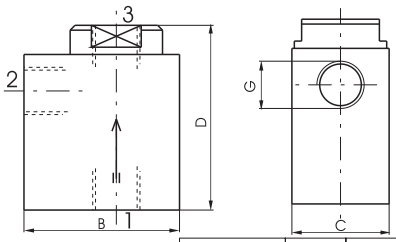

G	M5	1/8"	1/4"	1/2"
B	22	32	35	52
C	12	20	25	37
D	28	38	50	62
Weight gr.	50	62	112	310
Flow rate Nl/min at 6 bar with Δ p = 1 from 1 to 2	120	480	960	3300
Flow rate Nl/min at 6 bar on free exhaust from 2 to 3	220	1100	1930	6500

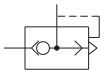

Operational characteristics		
Fluid	Working pressure (bar)	Temperature °C
Filtered air	0,5 ÷ 10	-5 - +70

Quick exhaust in line valve

Ordering code

6.02.❶.Ⓒ.L

❶	CONNECTION (IN)
	M5 = M5
	03 = tube Ø3
	04 = tube Ø4
	06 = tube Ø6
Ⓒ	CONNECTION (OUT)
	M5 = M5
	M7 = M7
	18 = G1/8"
❶	04 = tube Ø4
	06 = tube Ø6

Weight "see table"

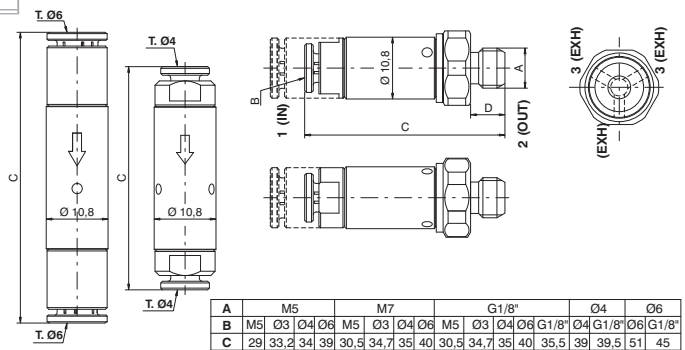

A	M5				M7				G1/8"					Ø4		Ø6	
B	M5	Ø3	Ø4	Ø6	M5	Ø3	Ø4	Ø6	M5	Ø3	Ø4	Ø6	G1/8"	Ø4	G1/8"	Ø6	G1/8"
C	29	33,2	34	39	30,5	34,7	35	40	30,5	34,7	35	40	35,5	39	39,5	51	45
D	4,5				6									-	5,5	-	5,5
Weight (gr.)	17								18					17		20	18
Flow rate Nl/min at 6 bar with Δp=1 (from 1 to 2)	90				110									90			110
Flow rate Nl/min at 6 bar on free exhaust (from 2 to 3)	240				350									240			350

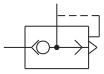

Operational characteristics		
Fluid	Max working pressure (bar)	Temperature °C
Filtered air	10 bar	-5 - +70

Exhaust flow control

Ordering code

6.03.❶

❶	CONNECTION
	05 = M5
	18 = G 1/8"
	14 =G 1/4"
	12 = G 1/2"

Weight "see table"

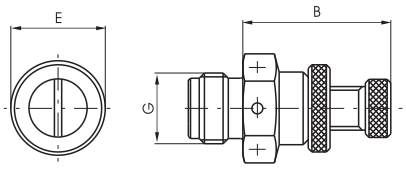

G	M5	1/8"	1/4"	1/2"
B	21	18	22	39
E	9	13	16	25
Weight gr.	10	18	32	155

Operational characteristics		
Fluid	Max working pressure (bar)	Temperature °C
Filtered air	10 bar	-5 - +70

1

Shuttle valve "OR"

Ordering code

6.04.❶

❶	CONNECTION
	05 = M5
	18 = G 1/8"
	14 =G 1/4"

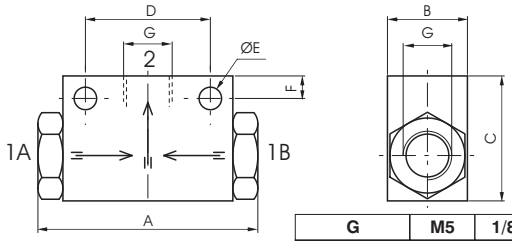

G	M5	1/8"	1/4"
A	27	44	62
B	12	16	22
C	17	25	30
D	15	25	35
E	3,5	4,5	5,5
F	3,5	4,5	5,5
Weight g.	33	50	110
Flow rate at 6 bar with Δp = 1 Nl/min.	110	700	2200

Weight "see table"

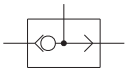

Operational characteristics		
Fluid	Max working pressure (bar)	Temperature °C
Filtered air	10 bar	-5 - +70

Shuttle valve "OR" - T=4

Ordering code

6.04.04

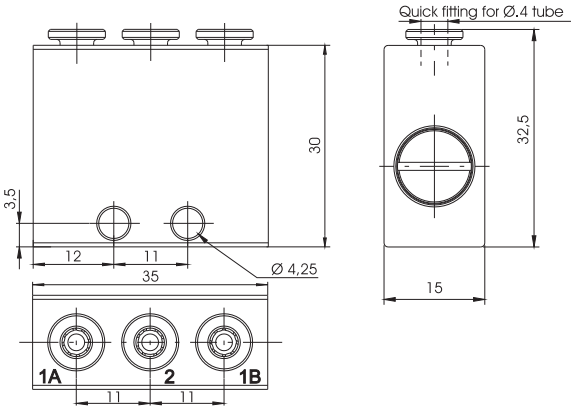

Weight gr. 50

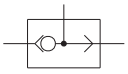

Operational characteristics					
Fluid	Max working pressure (bar)	Temperature °C	Flow rate at 6 bar with Δp=1 (Nl/min)	Orifice size (mm)	Connections
Filtered and lubricated air	10 bar	-5 - +70	105 Nl/min	mm. 2,5	Fitting T=4

Shuttle valve "AND"

Ordering code

6.04.❶/1

❶	CONNECTION
	05 = M5
	18 = G 1/8"

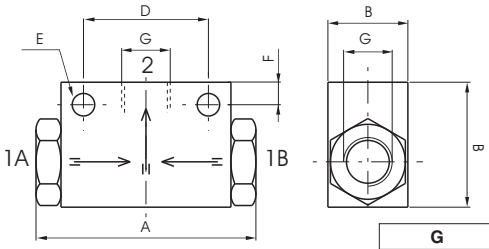

G	M5	1/8"
A	36	44
B	12	16
C	22	45
D	20	25
E	3,2	4,5
F	3,5	4,5
Weight gr.	30	50
Flow rate at 6 bar with Δp = 1 Nl/min.	100	480

Weight "see table"

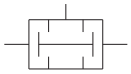

Operational characteristics		
Fluid	Max working pressure (bar)	Temperature °C
Filtered air	10 bar	-5 - +70

1

Shuttle valve "AND" - T=4

Ordering code
6.04.04/1

Weight gr. 50

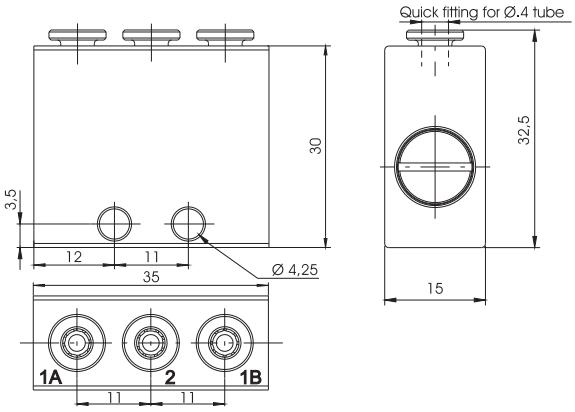

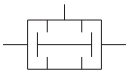

Operational characteristics					
Fluid	Max working pressure (bar)	Temperature °C	Flow rate at 6 bar with Δp=1 (Nl/min)	Orifice size (mm)	Connections
Filtered air	10 bar	-5 - +70	105 Nl/min	mm. 2,5	Fitting T=4

Silencers steel wool

Ordering code	
6.05.❶	
❶	CONNECTION
	18 = G 1/8"
	14 =G 1/4"
	38 =G 3/8"
	12 = G 1/2"

Weight "see table"

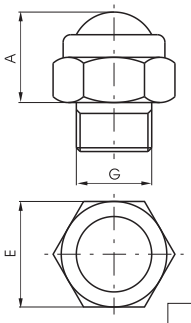

G	1/8"	1/4"	3/8"	1/2"
A	12	13	15	17
E	14	17	22	27
Weight gr.	8	16	32	44

Operational characteristics		
Fluid	Max working pressure (bar)	Temperature °C
Filtered air	10 bar	-5 - +70

Silencers brass

Ordering code	
6.06.❶	
❶	CONNECTION
	05 = M5
	18 = G 1/8"
	14 =G 1/4"
	38 = G 3/8"
	12 = G 1/2"
	34 = G 3/4"
	01 = G 1"

Weight "see table"

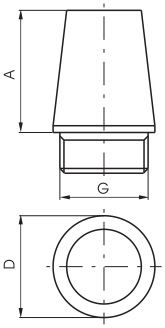

G	M5	1/8"	1/4"	3/8"	1/2"	3/4"	1"
A	17	15	18	28	32	40	50
D	8	12	15	19	23	29	38
Weight gr.	4	8	15	35	50	92	182

Operational characteristics		
Fluid	Max working pressure (bar)	Temperature °C
Filtered air	10 bar	-5 - +70

1

G 1/8" compact check valves

Ordering code

6.07.18.Ⓖ

Ⓖ	SEALS
	R = NBR
	VR = FPM

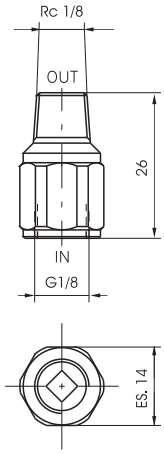

Weight gr. 50

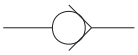

Operational characteristics

Fluid	Max working pressure (bar)	Temperature °C	Flow rate at 6 bar with Δp=1 (Nl/min)
Filtered air	Min.	-5 - +70	100 Nl/min

Check valves

Ordering code

6.07.Ⓣ

Ⓣ	POPPET
	05 = NBR - M5
	18 = NBR - G 1/8"
	14 = NBR - G 1/4"
	38 = NBR - G 3/8"
	12 = NBR - G 1/2"
	18V = FPM - G 1/8"
	14V = FPM - G 1/4"
	38V = FPM - G 3/8"
	12V = FPM - G 1/2"

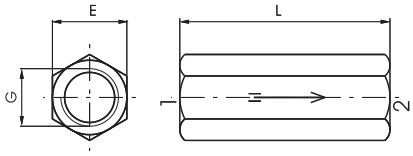

G	M5	1/8"	1/4"	3/8"	1/2"
E	10	14	17	21	25
L	21	37	48	50	60
Weight gr.	14	35	60	85	136
Flow rate at 6 bar with Δp = 1 Nl/min.	160	650	1150	2600	3500

Weight "see table"

Operational characteristics

Fluid	Max working pressure (bar)	Temperature °C
Filtered and lubricated air	10 bar	-5 ÷ +70 (+150°C FPM)

Manifold 4 ports

Ordering code

6.08.Ⓒ/4

Ⓒ	CONNECTION
	05 = M5
	18 = G 1/8"
	14 = G 1/4"
	38 = G 3/8"
	12 = G 1/2"

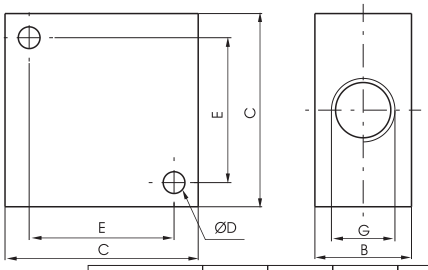

G	M5	1/8"	1/4"	3/8"	1/2"
B	10	16	20	20	30
C	20	32	40	40	50
D	3,3	4,5	4,5	5,5	6,5
E	14	22	30	30	38
Weight gr.	28	38	68	54	135

Weight "see table"

Operational characteristics

Fluid	Max working pressure (bar)	Temperature °C
Filtered air	20 bar	-5 - +70

1

Manifold 10 ports

Ordering code

6.08.Ⓒ/8

	CONNECTION
Ⓒ	05 = M5
	18 = G 1/8"
	14 = G 1/4"
	38 = G 3/8"
	12 = G 1/2"

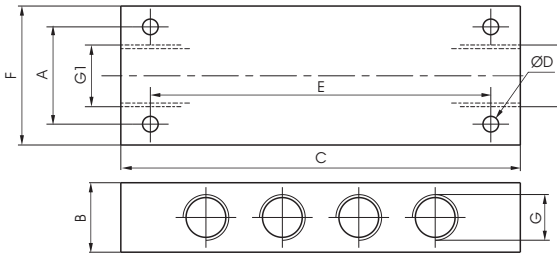

G	M5	1/8"	1/4"	3/8"	1/2"
G1	G1/8"	1/8"	1/4"	3/8"	1/2"
A	16	20	28	28	36
B	12	18	20	20	30
C	60	90	115	130	170
ØD	3,3	4,5	4,5	5,5	5,5
E	50	75	98	112	150
F	22	32	40	40	50
Weight gr.	92	110	185	165	460

Weight "see table"

Operational characteristics

Fluid	Max working pressure (bar)	Temperature °C
Filtered air	20 bar	-5 - +70

Block valve G1/4"

Ordering code

6.09.14.Ⓕ

	FUNCTION
Ⓕ	UN = Unidirectional
	BN = Bidirectional

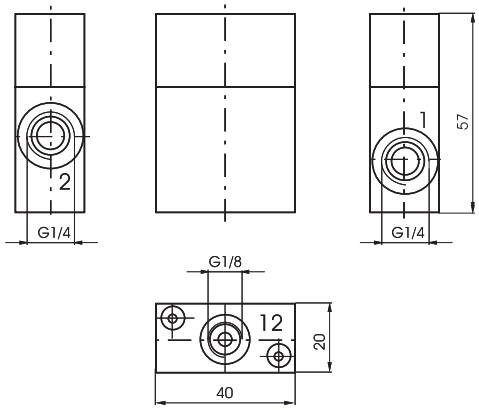

Weight gr. 122

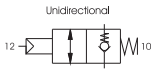

Operational characteristics

Fluid	Max working pressure (bar)	Min. piloting pressure	Temperature °C	Flow rate at 6 bar with Δp=1 (Nl/min)	Orifice size (mm)
Filtered and lubricated air	10 bar	4 bar	-5 - +70	700 Nl/min	mm. 7

Block valve G1/2"

Ordering code

6.09.12.Ⓕ

	FUNCTION
Ⓕ	UN = Unidirectional
	BN = Bidirectional

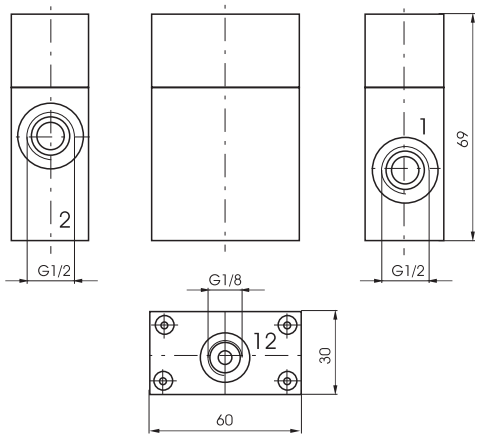

Weight gr. 305

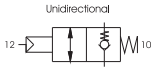

Operational characteristics

Fluid	Max working pressure (bar)	Min. piloting pressure	Temperature °C	Flow rate at 6 bar with Δp=1 (Nl/min)	Orifice size (mm)
Filtered and lubricated air	10 bar	4 bar	-5 - +70	2000 Nl/min	mm. 12

1

Economizer G1/8" - G1/4"

Ordering code

6.11.Ⓒ

Ⓒ	CONNECTION
	18 = G 1/8"
	14 = G 1/4"

Weight gr. 85

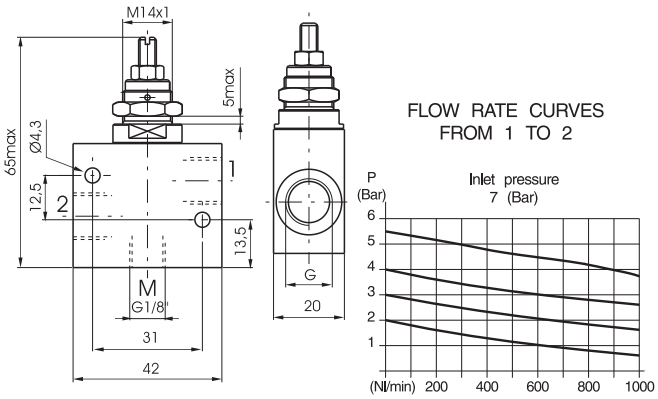

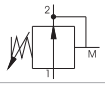

Operational characteristics

Fluid	Max working pressure (bar)	Pressure range	Temperature °C	Flow rate from port 2 to 1 at 6 bar with Δp=1	Orifice size (mm)
Filtered and lubricated air	10 bar	0 - 5,5 bar	-5 - +70	860 Nl/min	mm. 6

Gang mounting manifold for valves and solenoid valves G 1/8"

Ordering code

6.10.18.18/Ⓝ

Ⓝ	N. OF POSITIONS
	2 = N. 2 positions
	3 = N. 3 positions
	4 = N. 4 positions
	5 = N. 5 positions
	6 = N. 6 positions
	7 = N. 7 positions
	8 = N. 8 positions
	9 = N. 9 positions
	10 = N. 10 positions

Weight "see table"

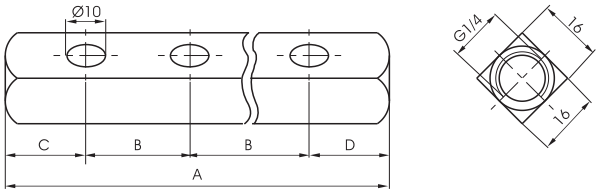

	N. OF POSITIONS								
	2	3	4	5	6	7	8	9	10
A	58	76	94	112	130	148	166	184	202
B	18	18	18	18	18	18	18	18	18
C	20	20	20	20	20	20	20	20	20
D	20	20	20	20	20	20	20	20	20
Weight gr.	55	80	105	130	155	180	205	230	255

Gang mounting manifold for valves and solenoid valves G 1/8"

Ordering code

6.10.18.25/Ⓝ

Ⓝ	N. OF POSITIONS
	2 = N. 2 positions
	3 = N. 3 positions
	4 = N. 4 positions
	5 = N. 5 positions
	6 = N. 6 positions
	7 = N. 7 positions
	8 = N. 8 positions
	9 = N. 9 positions
	10 = N. 10 positions

Weight "see table"

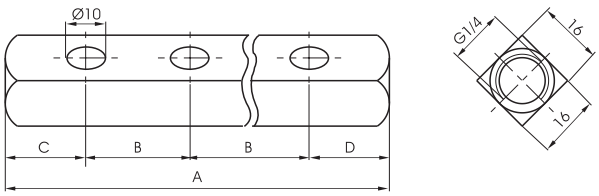

	N. OF POSITIONS								
	2	3	4	5	6	7	8	9	10
A	70	95	120	145	170	195	220	245	270
B	25	25	25	25	25	25	25	25	25
C	20	20	20	20	20	20	20	20	20
D	25	25	25	25	25	25	25	25	25
Weight gr.	80	115	150	185	220	255	290	325	360

Gang mounting manifold for valves and solenoid valves G 1/8"

Ordering code

6.10.18.26/Ⓝ

Ⓝ	N. OF POSITIONS
	2 = N. 2 positions
	3 = N. 3 positions
	4 = N. 4 positions
	5 = N. 5 positions
	6 = N. 6 positions
	7 = N. 7 positions
	8 = N. 8 positions
	9 = N. 9 positions
	10 = N. 10 positions

Weight "see table"

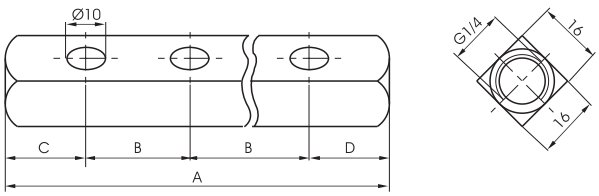

	N. OF POSITIONS								
	2	3	4	5	6	7	8	9	10
A	66	92	118	144	170	196	222	248	274
B	26	26	26	26	26	26	26	26	26
C	20	20	20	20	20	20	20	20	20
D	20	20	20	20	20	20	20	20	20
Weight gr.	70	110	145	185	220	260	300	340	375

1

Gang mounting manifold for valves and solenoid valves G 1/8"

Ordering code

6.10.18.30/Ⓝ

Ⓝ	N. OF POSITIONS
	2 = N. 2 positions
	3 = N. 3 positions
	4 = N. 4 positions
	5 = N. 5 positions
	6 = N. 6 positions
	7 = N. 7 positions
	8 = N. 8 positions
	9 = N. 9 positions
	10 = N. 10 positions

Weight "see table"

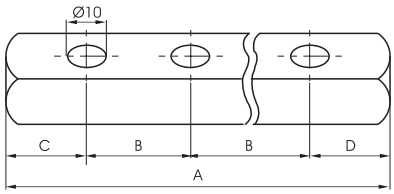

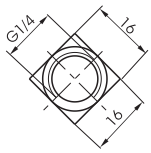

	N. OF POSITIONS								
	2	3	4	5	6	7	8	9	10
A	80	110	140	170	200	230	260	290	320
B	30	30	30	30	30	30	30	30	30
C	25	25	25	25	25	25	25	25	25
D	25	25	25	25	25	25	25	25	25
Weight gr.	100	140	180	220	260	300	340	380	420

Gang mounting manifold for valves and solenoid valves G 1/8"

Ordering code

6.10.18.32/Ⓝ

Ⓝ	N. OF POSITIONS
	2 = N. 2 positions
	3 = N. 3 positions
	4 = N. 4 positions
	5 = N. 5 positions
	6 = N. 6 positions
	7 = N. 7 positions
	8 = N. 8 positions
	9 = N. 9 positions
	10 = N. 10 positions

Weight "see table"

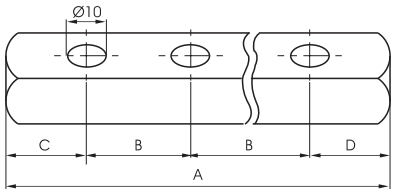

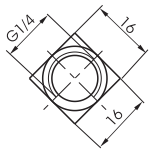

	N. OF POSITIONS								
	2	3	4	5	6	7	8	9	10
A	82	114	146	178	210	242	274	306	338
B	32	32	32	32	32	32	32	32	32
C	25	25	25	25	25	25	25	25	25
D	25	25	25	25	25	25	25	25	25
Weight gr.	100	145	190	235	280	325	370	415	460

Gang mounting manifold for valves and solenoid valves G 1/8"

Ordering code

6.10.18.35/Ⓝ

Ⓝ	N. OF POSITIONS
	2 = N. 2 positions
	3 = N. 3 positions
	4 = N. 4 positions
	5 = N. 5 positions
	6 = N. 6 positions
	7 = N. 7 positions
	8 = N. 8 positions
	9 = N. 9 positions
	10 = N. 10 positions

Weight "see table"

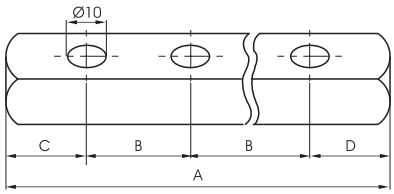

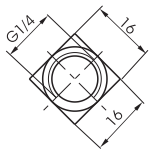

	N. OF POSITIONS								
	2	3	4	5	6	7	8	9	10
A	89	124	159	194	229	264	299	334	369
B	35	35	35	35	35	35	35	35	35
C	27	27	27	27	27	27	27	27	27
D	27	27	27	27	27	27	27	27	27
Weight gr.	110	160	210	260	310	360	410	460	510

Gang mounting manifold for valves and solenoid valves G 1/4"

Ordering code

6.10.14.20/Ⓝ

Ⓝ	N. OF POSITIONS
	2 = N. 2 positions
	3 = N. 3 positions
	4 = N. 4 positions
	5 = N. 5 positions
	6 = N. 6 positions
	7 = N. 7 positions
	8 = N. 8 positions
	9 = N. 9 positions
	10 = N. 10 positions

Weight "see table"

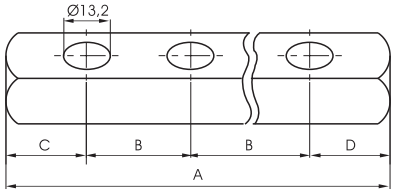

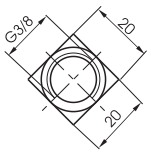

	N. OF POSITIONS								
	2	3	4	5	6	7	8	9	10
A	65	85	105	125	145	165	185	205	225
B	20	20	20	20	20	20	20	20	20
C	22,5	22,5	22,5	22,5	22,5	22,5	22,5	22,5	22,5
D	22,5	22,5	22,5	22,5	22,5	22,5	22,5	22,5	22,5
Weight gr.	130	150	190	190	210	230	250	270	290

1

Gang mounting manifold for valves and solenoid valves G 1/4"

Ordering code

6.10.14.25/Ⓝ

	N. OF POSITIONS
Ⓝ	2 = N. 2 positions
	3 = N. 3 positions
	4 = N. 4 positions
	5 = N. 5 positions
	6 = N. 6 positions
	7 = N. 7 positions
	8 = N. 8 positions
	9 = N. 9 positions
	10 = N. 10 positions

Weight "see table"

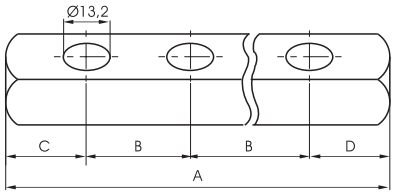

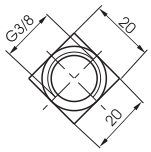

	N. OF POSITIONS								
	2	3	4	5	6	7	8	9	10
A	75	100	125	150	175	200	225	250	275
B	25	25	25	25	25	25	25	25	25
C	25	25	25	25	25	25	25	25	25
D	25	25	25	25	25	25	25	25	25
Weight gr.	140	170	200	230	260	290	320	350	380

Gang mounting manifold for valves and solenoid valves G 1/4"

Ordering code

6.10.14.30/Ⓝ

	N. OF POSITIONS
Ⓝ	2 = N. 2 positions
	3 = N. 3 positions
	4 = N. 4 positions
	5 = N. 5 positions
	6 = N. 6 positions
	7 = N. 7 positions
	8 = N. 8 positions
	9 = N. 9 positions
	10 = N. 10 positions

Weight "see table"

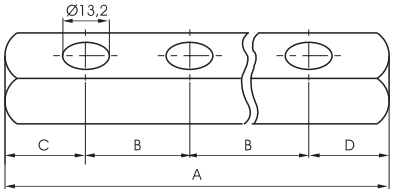

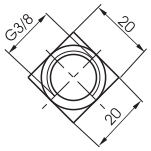

	N. OF POSITIONS								
	2	3	4	5	6	7	8	9	10
A	80	110	140	170	200	230	260	290	320
B	30	30	30	30	30	30	30	30	30
C	25	25	25	25	25	25	25	25	25
D	25	25	25	25	25	25	25	25	25
Weight gr.	150	190	230	270	310	350	390	430	470

Gang mounting manifold for valves and solenoid valves G 1/4"

Ordering code

6.10.14.35/Ⓝ

	N. OF POSITIONS
Ⓝ	2 = N. 2 positions
	3 = N. 3 positions
	4 = N. 4 positions
	5 = N. 5 positions
	6 = N. 6 positions
	7 = N. 7 positions
	8 = N. 8 positions
	9 = N. 9 positions
	10 = N. 10 positions

Weight "see table"

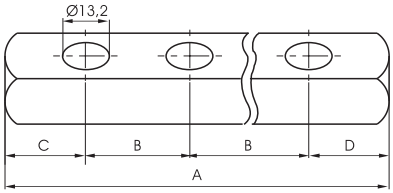

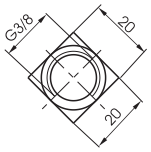

	N. OF POSITIONS								
	2	3	4	5	6	7	8	9	10
A	85	120	155	190	225	260	295	335	365
B	35	35	35	35	35	35	35	35	35
C	30	30	30	30	30	30	30	30	30
D	20	20	20	20	20	20	20	20	20
Weight gr.	160	210	260	310	360	410	460	510	560

Gang mounting manifold for valves and solenoid valves G 1/4"

Ordering code

6.10.14.45/Ⓝ

	N. OF POSITIONS
Ⓝ	2 = N. 2 positions
	3 = N. 3 positions
	4 = N. 4 positions
	5 = N. 5 positions
	6 = N. 6 positions
	7 = N. 7 positions
	8 = N. 8 positions
	9 = N. 9 positions
	10 = N. 10 positions

Weight "see table"

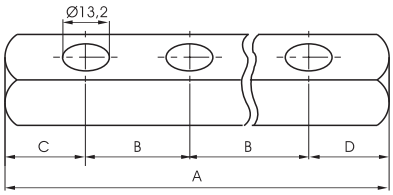

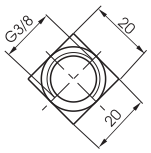

	N. OF POSITIONS								
	2	3	4	5	6	7	8	9	10
A	115	160	205	250	295	340	385	430	475
B	45	45	45	45	45	45	45	45	45
C	35	35	35	35	35	35	35	35	35
D	35	35	35	35	35	35	35	35	35
Weight gr.	200	275	350	425	500	575	650	725	800

Spry valves

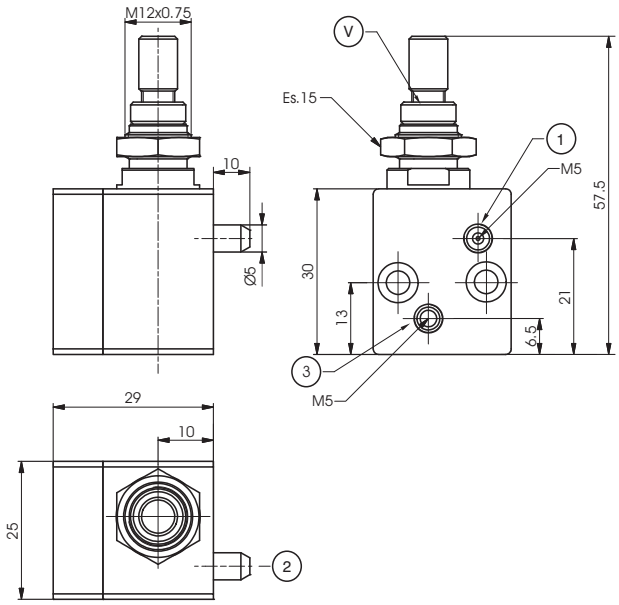

Ordering code
06.13.00

Supply air : Connection 1
Output (air and nebulized liquid) : Connection 2
Supply liquid : Connection 3

Liquid consumption diagram

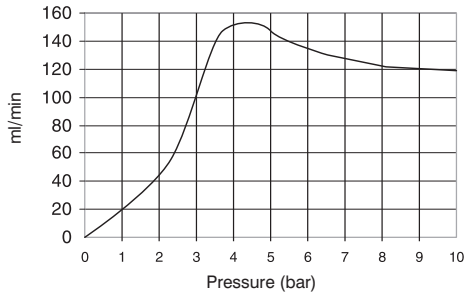

Volume of aspirated fluid in function of pressure power with the adjuster screw "V" totally open

Pneumatics symbol

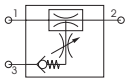

Vacuum diagram

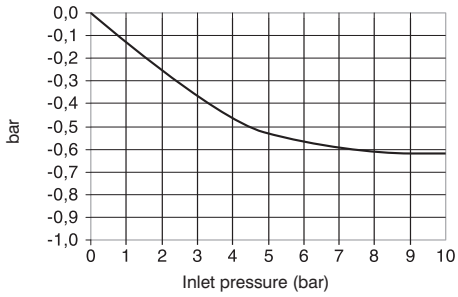

Volume of vacuum generated in function of supply pressure

Operational characteristics

- This valve, is based on the Venturi principle, and it is used to spray and nebulize a liquid.
- Useful in all applications where is needed a continuous lubrication and / or refrigeration.
- Incoming air (connection 1) sucks the liquid through the venturi principle (connection 3) to obtain a continuous spray output (connection 2).

Technical characteristic

Fluid	Filtered and lubricated air
Liquid	Water and oil (Liquid viscosity 3°E-5°E)
Working pressure	3 - 10 bar
Temperature °C	-5 - +70
Weight	85gr.

General

When building automated pneumatic circuits, it is sometimes necessary to alter or modify the various signals. There can be, for instance, a permanent signal coming from a limit switch that needs to be terminated, or there may be a need to modify a pneumatic signal into an electric one, etc. While this can be accomplished by using commercially available components, the process is tedious and expensive. We have therefore developed a number of components to facilitates this task resulting a consistent saving of time, space and money.

The 900 series consist of the following components:

- Pressure switch, which transforms a pneumatic signal into an electric one.
- Impulse generator, which transforms a permanent pneumatic signal into an adjustable impulse from 0 to 10 seconds.
- Pneumatic timer (N.C. or N.O.), which cuts or releases a pneumatic signal within an adjustable time.
- Two hands safety valve, which allows a safety use of two hands pneumatic controls (for example two push-button 3/2 N.C. to a certain distance) excluding false signals in case of push-button or valve malfunction.
- Flip - Flop: 5/2 ways valve, single signal actuated, commutes the outlet from 2 to 4 and vice versa at each puls.
  For a correct functioning it's important that inlet pressure be the same or lower than pilot pressure.
- Oscillator valve, 5/2 - G 1/8" with two logic functions "NOT" mounted on board, switches when the pressure in the connected cylinder exhaust chamber is reaching the threshold of "NOT".
- Signal amplifier, 3/2 - G 1/8" N.C. valve actuated by weak signals but higher than 0.05 bar.
- Progressive start-up valve, which is a device that is fitted in between valve or solenoid valve and cylinder allows a gradual filling of the chamber providing a low power cylinder movement.
  The progressive start-up valve is made of a flow control valve and a 2/2 N.C. valve with 6 mm nominal orifice.
  The valve is totally open when the pressure in the cylinder reaches 50% of inlet pressure.
- High-low pressure devices, located in the pneumatic circuit between valve and cylinder, allow the function of the cylinder with two different pressures. Example: in case of a locking action, it is possible to approach the required position at a low pressure, then increase to its maximum value in the circuit with the use of an electric signal.
  They are practically made of a piloted pressure regulator without relieving.

Construction characteristics

We have not listed all different materials used for the construction of these components because the list would be too long. We use corrosion proof material, brass or anodized aluminium and the most appropriate specific mixture for seals. If more information is required please contact our technical departement.

Use and maintenance

In use pay attention to the minimum and maximum criteria for temperature and pressure, checking and ensure good quality compressed air. In a dirty environment, protect the exhaust ports. In this case, maintenance is minimal and is necessary only if the air is particularly dirty. The components most subject to damage by the accumulation of dirt are flow regulators with fine regulation and silencers. As for regulators, follow the normal procedure for disassembling, washing with non-chemical cleaning agents and remounting. The silencers need only to be rinsed in petrol or solvent and blown dry with compressed air.

The number of requests for spare seals for flow regulators and shuttle valves are statistically irrelevant. More often, it is necessary to replace the lining of the quick exhaust because of the wear it undergoes due to the particular conditions of operating.

ATTENTION: for lubrication use class H hydraulic oils, for example Castrol MAGNA GC 32.

1

Pressure switch G 1/8" - screw connections

Ordering code	
900.18.1-Ⓟ	
Ⓟ	PRESSURE
	1 = Min. switch pressure 1 bar
	4 = Min. switch pressure 4 bar

Weight gr. 75

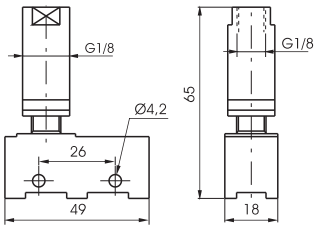

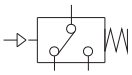

Operational characteristics				
Fluid	Max working pressure (bar)	Temperature °C	Flow rate microswitch	Working Pilot ports size
Filtered and lubricated air	10 bar	-5 - +70	13 (3) A - 230V~	G 1/8"

Pressure switch G 1/8" - spade connections

Ordering code	
900.18.1/Ⓟ	
Ⓟ	PRESSURE
	1 = Min. switch pressure 1 bar
	4 = Min. switch pressure 4 bar

Weight gr. 60

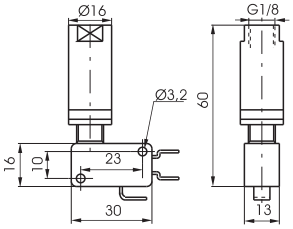

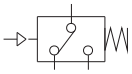

Operational characteristics				
Fluid	Max working pressure (bar)	Temperature °C	Flow rate microswitch	Working Pilot ports size
Filtered and lubricated air	10 bar	-5 - +70	16 (5) A - 230V~	G 1/8"

Switch protection

Ordering code
900.18.0

Weight gr. 6

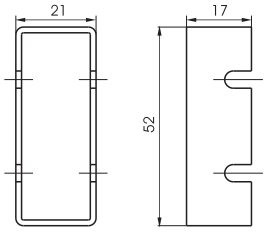

Impulse generator

Ordering code
900.18.2N

Weight gr. 235

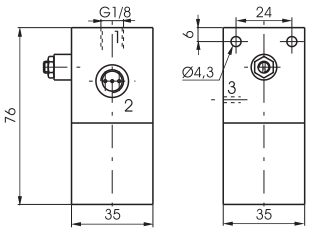

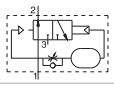

Operational characteristics			
Fluid	Max working pressure (bar)	Temperature °C	Orifice size (mm)
Filtered and lubricated air	10 bar	-5 - +70	mm 2

1

Pneumatic timer N.C. - G 1/8"

Ordering code

900.18.T

T	TIME
	3 = 0 - 30 sec.
	3-60 = 0 - 60 sec.

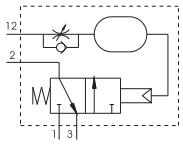

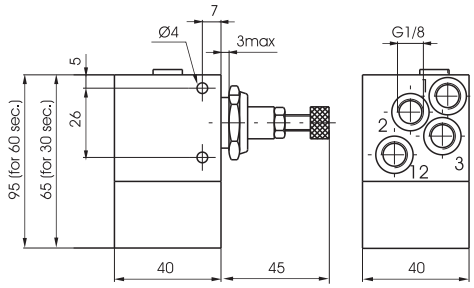

Weight gr. 290 (30 sec.)
Weight gr. 350 (60 sec.)

Operational characteristics

Fluid	Working pressure (bar)	Temperature °C	Flow rate at 6 bar with Δp=1 (Nl/min)	Orifice size (mm)
Filtered and lubricated air	3 - 10 bar	-5 - +70	130 Nl/min	mm 2,5

Pneumatic timer N.O. - G 1/8"

Ordering code

900.18.T

T	TIME
	4 = 0 - 30 sec.
	4-60 = 0 - 60 sec.

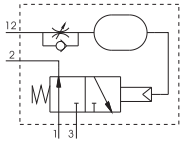

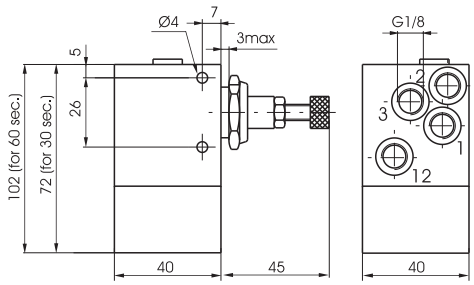

Weight gr. 320 (30 sec.)
Weight gr. 380 (60 sec.)

Operational characteristics

Fluid	Working pressure (bar)	Temperature °C	Flow rate at 6 bar with Δp=1 (Nl/min)	Orifice size (mm)
Filtered and lubricated air	4 - 10 bar	-5 - +70	130 Nl/min	mm 2,5

Two hands safety valve G 1/4"

Ordering code

900.52.1.1

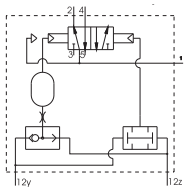

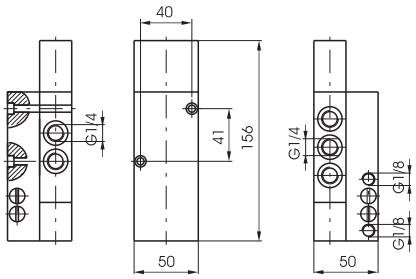

Weight gr. 780

Operational characteristics

Fluid	Max working pressure (bar)	Temperature °C	Flow rate at 6 bar with Δp=1 (Nl/min)	Orifice size (mm)	Working ports size	Working pilot size
Filtered and lubricated air	10 bar	-5 - +70	1030 Nl/min	mm 7	G 1/4"	G 1/8"

1

Two hands safety valve III A class certification (according to EN 574 standard)

Ordering code

900.18.9

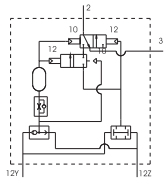

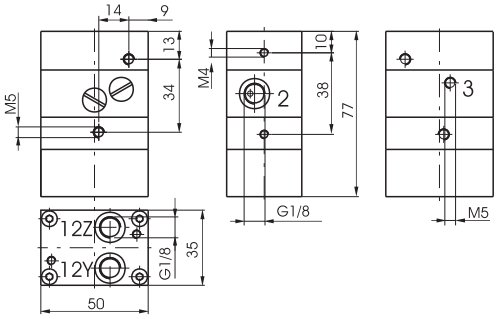

Weight gr. 340

Operational characteristics						
Fluid	Working pressure (bar)	Temperature °C	Flow rate at 6 bar with Δp=1 (Nl/min)	Orifice size (mm)	Working ports size	Working pilot size
Filtered and lubricated air	3 - 8 bar	-5 - +70	40 Nl/min	mm 2,5	G 1/8"	G 1/8"

Two hands safety valve III B class certification (according to EN 574 standard)

Ordering code

900.18.10

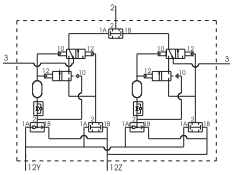

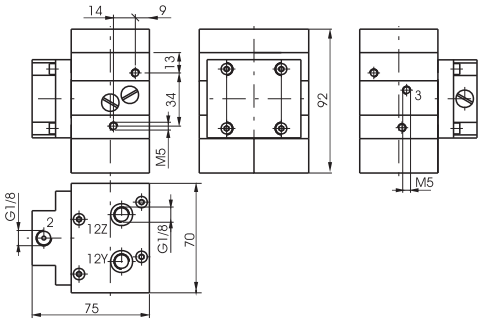

Weight gr. 980

Operational characteristics						
Fluid	Working pressure (bar)	Temperature °C	Flow rate at 6 bar with Δp=1 (Nl/min)	Orifice size (mm)	Working ports size	Working pilot size
Filtered and lubricated air	3 - 8 bar	-5 - +70	40 Nl/min	mm 2,5	G 1/8"	G 1/8"

Power valve adaptor (Series 2400)

Ordering code

900.18.11

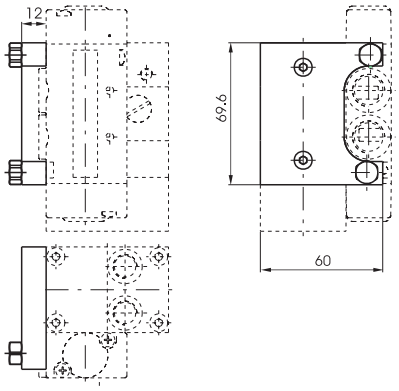

Weight gr. 75

Flip-flop valve G 1/8" - Pneumatic command

Ordering code

900.52.1.3

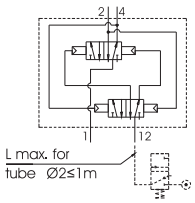

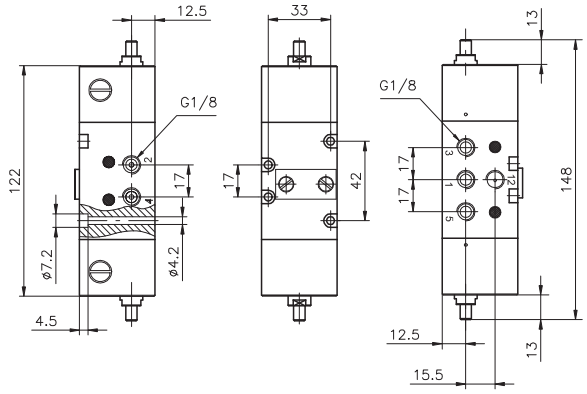

Weight gr. 550

Attention: pressure of signal "12" must be the same or higher than device inlet pressure. The maximum distance between the pilot valve and the device must not exceed 1Mtr. (see pneumatic scheme). Should be necessary to work at a greater distance it is advisable to use a pneumatic-spring shut-off valve positioned at the recommended distance.

Operational characteristics

Fluid	Max working pressure (bar)	Temperature °C	Flow rate at 6 bar with Δp=1 (Nl/min)	Orifice size (mm)	Working ports size
Filtered and lubricated air	10 bar	-5 - +70	540 Nl/min	mm 6	G 1/8"

Flip-flop valve - Electric command with M2 mechanic

Ordering code

900.52.1.4

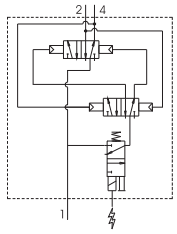

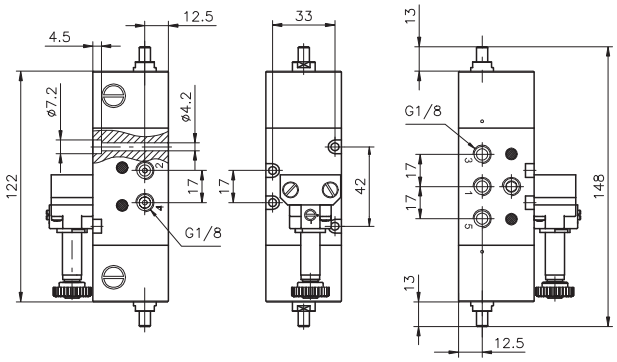

Weight gr. 660

Operational characteristics

Fluid	Max working pressure (bar)	Temperature °C	Flow rate at 6 bar with Δp=1 (Nl/min)	Orifice size (mm)	Working ports size
Filtered and lubricated air	10 bar	-5 - +70	540 Nl/min	mm 6	G 1/8"

Flip-flop valve - Electric command with M3P CNOMO

Ordering code

900.52.1.5

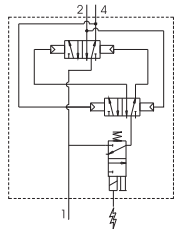

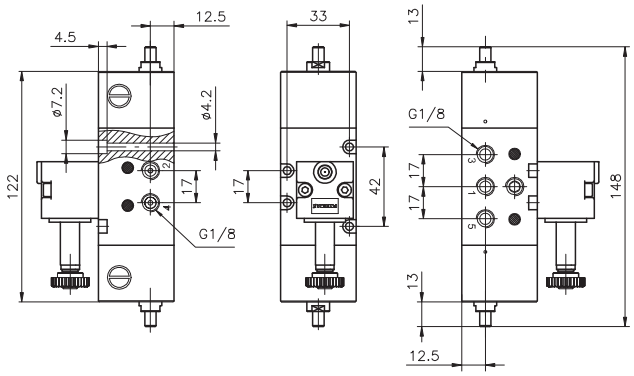

Weight gr. 600

Operational characteristics

Fluid	Max working pressure (bar)	Temperature °C	Flow rate at 6 bar with Δp=1 (Nl/min)	Orifice size (mm)	Working ports size
Filtered and lubricated air	10 bar	-5 - +70	540 Nl/min	mm 6	G 1/8"

1

Oscillator valve G 1/8"

Ordering code

900.52.Ⓝ

Ⓝ	FUNCTION
	5 = without logic functions NOT
	5C = with logic functions NOT

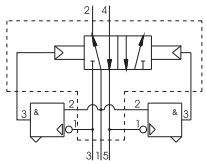

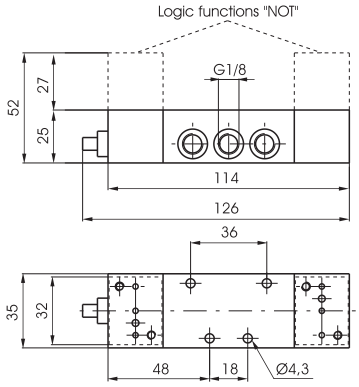

Weight gr. 600

Operational characteristics

Fluid	Max working pressure (bar)	Min working pressure	Temperature °C	Flow rate at 6 bar with Δp=1 (Nl/min)	Orifice size (mm)	Working ports size
Filtered and lubricated air	8 bar	2 bar	-5 - +70	540 Nl/min	mm 6	G 1/8"

Signal amplifier G 1/8"

Ordering code

900.32.6

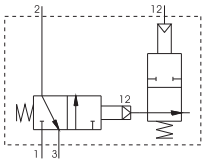

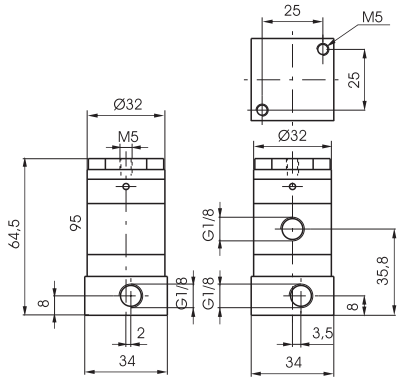

Weight gr. 170

Operational characteristics

Fluid	Max working pressure (bar)	Min working pressure	Temperature °C	Flow rate at 6 bar with Δp=1 (Nl/min)	Orifice size mm)	Working ports size
Filtered and lubricated air	10 bar	0,05 bar	-5 - +70	130 Nl/min	mm 3	G 1/8"

Progressive start-up valve G 1/4"

Ordering code

900.14.7

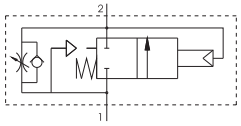

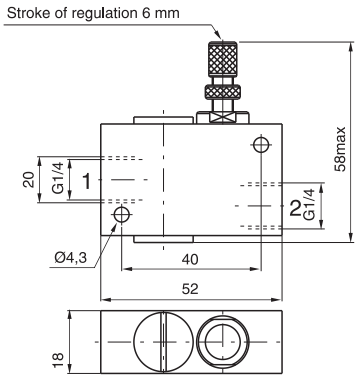

Weight gr. 100
Flow rate needle fully open from port 1 to 2 (Nl/min.) = 200

Portata a 6 bar scarico libero (Nl/min.) = 1100

Operational characteristics

Fluid	Working pressure (bar)	Temperature °C	Flow rate from 1 to 2	Flow rate from 2 to 1	Orifice size (mm)
Filtered and lubricated air	2,5 bar10 bar	-5 - +70	760 Nl/min	900 Nl/min	mm. 6

1

High-low pressure device with pneumatic pilot

Ordering code

900.18.8P

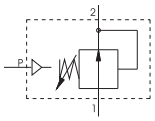

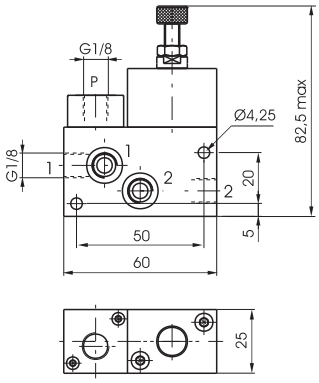

Weight gr. 240
With pneumatic commande

1 = Inlet / pressure gauge
2 = Outlet / pressure gauge
P = Piloting

Operational characteristics

Fluid	Max working pressure (bar)	Pressure range (bar)	Temperature °C		Max flow 6 bar Δp=1	Working ports size
Filtered air, with or without lubrication	10 bar	1 - 4 bar	Min.	Max.	650 Nl/min	G 1/8"

High-low pressure device with M2 mechanic

Ordering code

900.18.8E

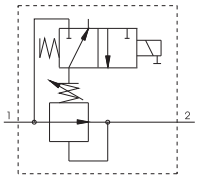

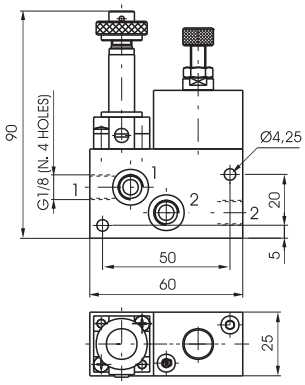

Weight gr. 280
With M2 mechanic

1 = Inlet / pressure gauge
2 = Outlet / pressure gauge

Operational characteristics

Fluid	Max working pressure (bar)	Pressure range (bar)	Temperature °C		Max flow 6 bar Δp=1	Working ports size
Filtered air, with or without lubrication	10 bar	1 - 4 bar	Min.	Max.	650 Nl/min	G 1/8"

External feeding base "NOT" logical element

Ordering code

900.005

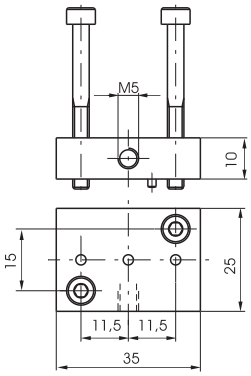

Weight gr. 35

Description

The blocking valves are used to maintain pressure in the downstream part of the pneumatic circuit even when the pressure supply is shut down.
Blocking valves are normally assembled directly on cylinders ports in order to maintain the position even in cases of accidental loss of the pilot pressure by preventing a sudden loss of pressure in the cylinder chambers.
Unidirectional and bidirectional version are both available.
The unidirectional version allows free air to flow in one direction while requires a pneumatic signal to allow air flow in the opposite direction.
The bidirectional version requires a pressure signal to allow air flow in both of the two directions.

The blocking valve cannot be used as safety device.

Constructive features

UNIDIRECTIONAL VERSION

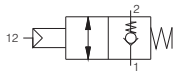

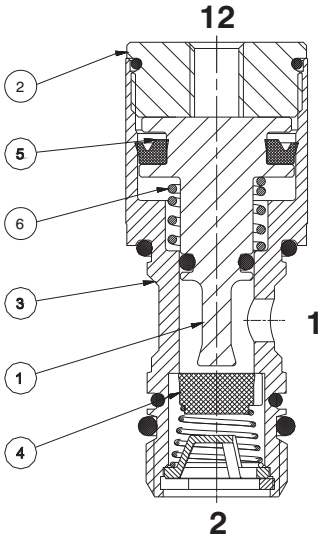

1 - Aluminium piston
2 - Brass plug
3 - Brass body
4 - FPM poppet
(1/8” and 1/4” version)
PUR poppet
(3/8” and 1/2” version)
5 - NBR seal
6 - Steel spring

BIDIRECTIONAL VERSION

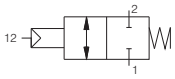

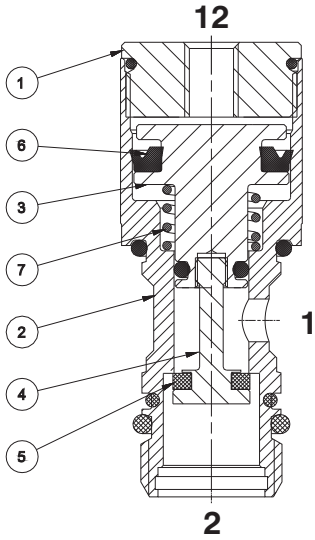

1 - Brass plug
2 - Brass body
3 - Aluminium piston
4 - Steel piston extension
5 - PUR poppet
6 - NBR seal
7 - Steel spring

Working curves

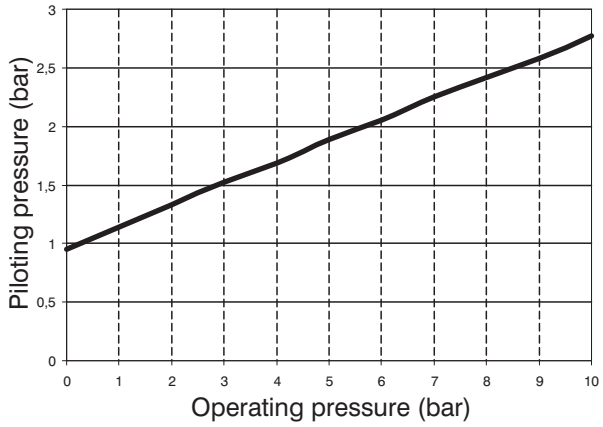

1

Blocking valves metal type - Size 1/8"

Ordering code

50Ⓣ18Ⓥ

Ⓣ	METAL TYPE
	A = Banjo only
	04 = Banjo Ø4
	06 = Banjo Ø6
	08 = Banjo Ø8
	18 = Banjo G1/8"
Ⓥ	VERSION
	U = Unidirectional
	B = Bidirectional

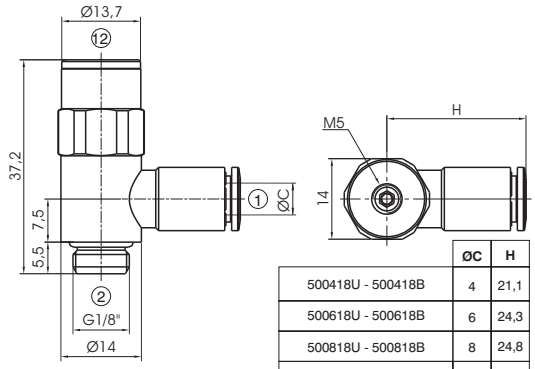

	ØC	H
500418U - 500418B	4	21,1
500618U - 500618B	6	24,3
500818U - 500818B	8	24,8
501818U - 501818B	G1/8"	20

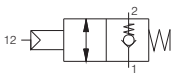

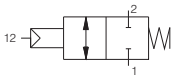

Operational characteristics

Fluid	Pressure range (bar)	Flow rate at 6 bar with Δp=1 (Nl/min)	Flow rate with free exhaus (Nl/min)	Temperature °C
Filtered air, with or without lubrication	0,5 - 10	285	450	-5 - +50

Blocking valves technopolymer type - Size 1/8"

Ordering code

T50Ⓣ18Ⓥ

Ⓣ	TECHNOPOLYMER TYPE
	A = Banjo only
	04 = Banjo Ø4
	06 = Banjo Ø6
	08 = Banjo Ø8
Ⓥ	VERSION
	U = Unidirectional
	B = Bidirectional

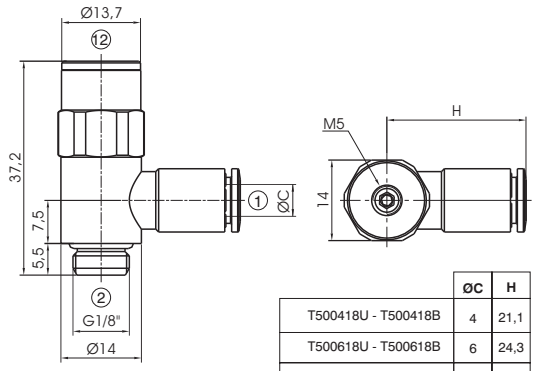

	ØC	H
T500418U - T500418B	4	21,1
T500618U - T500618B	6	24,3
T500818U - T500818B	8	24,8

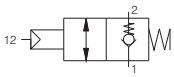

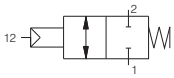

Operational characteristics

Fluid	Pressure range (bar)	Flow rate at 6 bar with Δp=1 (Nl/min)	Flow rate with free exhaus (Nl/min)	Temperature °C
Filtered air, with or without lubrication	0,5 - 10	285	450	-5 - +50

Blocking valves metal type - Size 1/4"

Ordering code

50Ⓣ14Ⓥ

Ⓣ	METAL TYPE
	A = Banjo only
	06 = Banjo Ø6
	08 = Banjo Ø8
	10 = Banjo Ø10
	14 = Banjo G1/4"
Ⓥ	VERSION
	U = Unidirectional
	B = Bidirectional

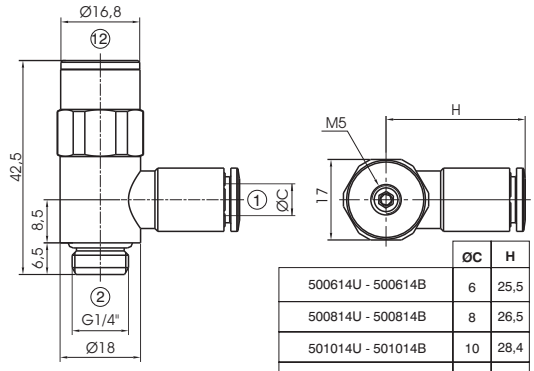

	ØC	H
500614U - 500614B	6	25,5
500814U - 500814B	8	26,5
501014U - 501014B	10	28,4
501414U - 501414B	G1/4"	24

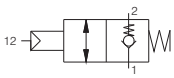

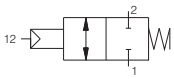

Operational characteristics

Fluid	Pressure range (bar)	Flow rate at 6 bar with Δp=1 (Nl/min)	Flow rate with free exhaus (Nl/min)	Temperature °C
Filtered air, with or without lubrication	0,5 - 10	530	800	-5 - +50

1

Blocking valves technopolymer type - Size 1/4"

Ordering code

T50Ⓣ14Ⓥ

Ⓣ	TECHNOPOLYMER TYPE
	A = Banjo only
	06 = Banjo Ø6
	08 = Banjo Ø8
	10 = Banjo Ø10
Ⓥ	VERSION
	U = Unidirectional
	B = Bidirectional

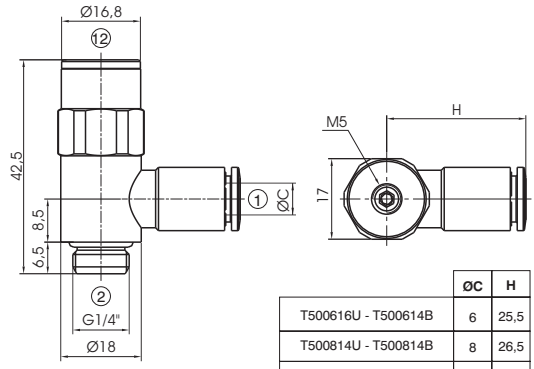

	ØC	H
T500616U - T500614B	6	25,5
T500814U - T500814B	8	26,5
T501014U - T501014B	10	28,4

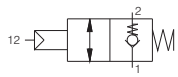

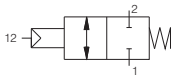

Operational characteristics

Fluid	Pressure range (bar)	Flow rate at 6 bar with Δp=1	Flow rate with free exhaus (Nl/min)	Temperature °C
Filtered air, with or without lubrication	0,5 - 10	530	800	-5 - +50

Blocking valves metal type - Size 3/8"

Ordering code

50Ⓣ38Ⓥ

Ⓣ	METAL TYPE
	A = Banjo only
	06 = Banjo Ø6
	08 = Banjo Ø8
	10 = Banjo Ø10
	12 = Banjo G1/2"
	38 = Banjo G3/8"
Ⓥ	VERSION
	U = Unidirectional
	B = Bidirectional

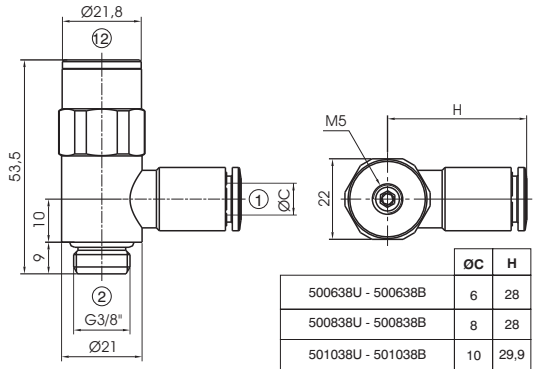

	ØC	H
500638U - 500638B	6	28
500838U - 500838B	8	28
501038U - 501038B	10	29,9
501238U - 501238B	12	31,4
503838U - 503838B	G3/8"	28,5

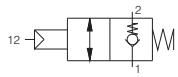

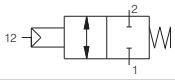

Operational characteristics

Fluid	Pressure range (bar)	Flow rate at 6 bar with Δp=1 (Nl/min)	Flow rate with free exhaus (Nl/min)	Temperature °C
Filtered air, with or without lubrication	0,5 - 10	1000	1600	-5 - +50

Blocking valves technopolymer type - Size 3/8"

Ordering code

T50Ⓣ38Ⓥ

Ⓣ	TECHNOPOLYMER TYPE
	A = Banjo only
	08 = Banjo Ø8
	10 = Banjo Ø10
	12 = Banjo G1/2"
Ⓥ	VERSION
	U = Unidirectional
	B = Bidirectional

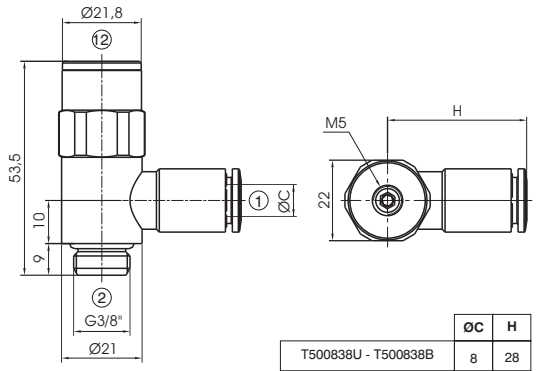

	ØC	H
T500838U - T500838B	8	28
T501038U - T501038B	10	29,9
T501238U - T501238B	12	31,4

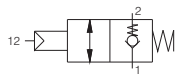

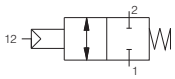

Operational characteristics

Fluid	Pressure range (bar)	Flow rate at 6 bar with Δp=1 (Nl/min)	Flow rate with free exhaus (Nl/min)	Temperature °C
Filtered air, with or without lubrication	0,5 - 10	1000	1600	-5 - +50

1

Blocking valves metal type - Size 1/2"

Ordering code

50Ⓣ12Ⓥ

Ⓣ	METAL TYPE
	A = Banjo only
	12 = Banjo G1/2"
	14 = Banjo Ø14
	G12 = Banjo G1/2"
Ⓥ	VERSION
	U = Unidirectional
	B = Bidirectional

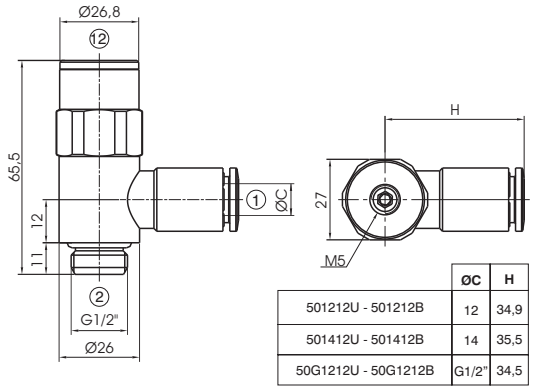

	ØC	H
501212U - 501212B	12	34,9
501412U - 501412B	14	35,5
50G1212U - 50G1212B	G1/2"	34,5

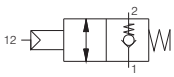

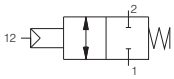

Operational characteristics

Fluid	Pressure range (bar)	Flow rate at 6 bar with Δp=1 (Nl/min)	Flow rate with free exhaus (Nl/min)	Temperature °C
Filtered air, with or without lubrication	0,5 - 10	1300	2600	-5 - +50

Blocking valves technopolymer type - Size 1/2"

Ordering code

T50Ⓣ12Ⓥ

Ⓣ	TECHNOPOLYMER TYPE
	A = Banjo only
	10 = Banjo Ø10
	12 = Banjo G1/2"
Ⓥ	VERSION
	U = Unidirectional
	B = Bidirectional

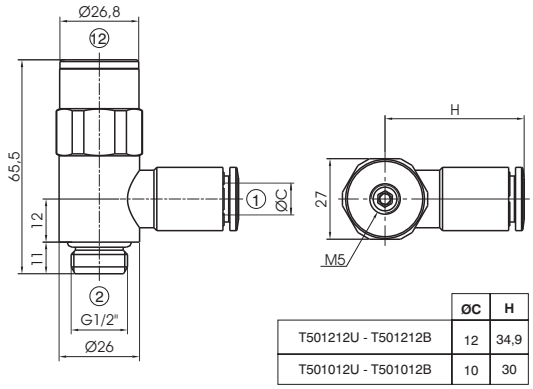

	ØC	H
T501212U - T501212B	12	34,9
T501012U - T501012B	10	30

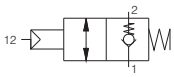

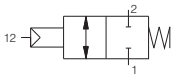

Operational characteristics

Fluid	Pressure range (bar)	Flow rate at 6 bar with Δp=1 (Nl/min)	Flow rate with free exhaus (Nl/min)	Temperature °C
Filtered air, with or without lubrication	0,5 - 10	1300	2600	-5 - +50

Tecno FUN

General

New compact line of different logic functions that can be used in any place of the secondary pneumatic circuit, developed to be installed directly onto the main pneumatic components (distributors or cylinders). Thanks to the modular design it is possible to easily join together multiple logic functions without the need of using pipes to connect them; it is also possible to choose the type and style of each connection. The connections available are the following: straight cartridge; Banjo PL cartridge; male cartridge threaded 1/8" or 1/4" and female cartridge threaded 1/8".
Function fittings can also be assembled side by side in order to be assembled on the DIN EN 50022 rail (using the relevant kit).

Other characteristics:

Technopolymer body
Input/output connection directly integrated into the body
In line or 90° connection
Possibility to build a manifold -parallel mounting-
Different connection options:
Tube Ø4 Ø6 Ø8 (elbow version as well)
G1/8" G1/4" male straight cartridge
G1/8" female cartridge, in line or 90°

Different mounting options:

- Wall fixing through the holes in the body
- By means of the fixing bracket
- Panel mounting (for those function that include such possibility)
- On DIN rail EN 50022 (using the DIN rail adapter kit)

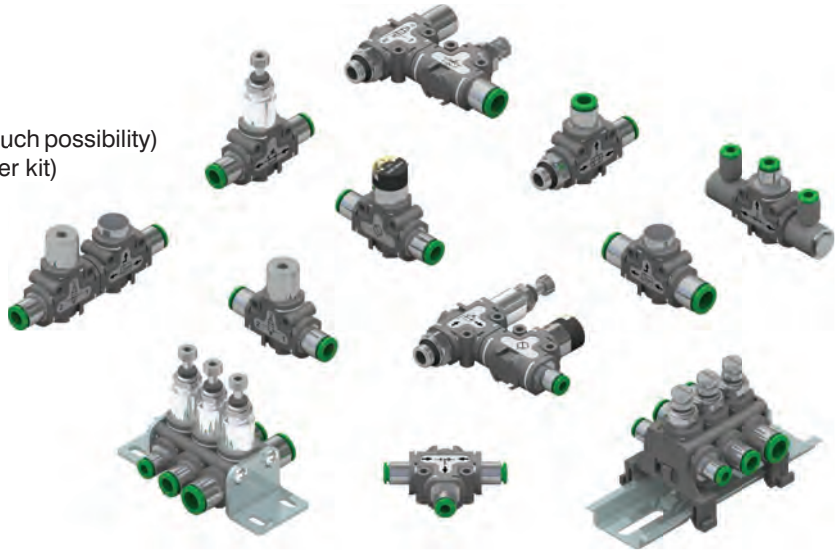

Available functions:

- Flow control valve (FCV)
- pressure regulator (PR)
- block valve (BV)
- quick exhaust valve (QEV)
- OR gate (CSV-OR)
- AND gate (CSV-AND)
- pressure gauge (PI)
- pressure regulator + pressure gauge (PR+PI)
- block valve + Flow control valve (BV+FCV)
- block valve + quick exhaust valve (BV+QEV)

1

Flow regulator

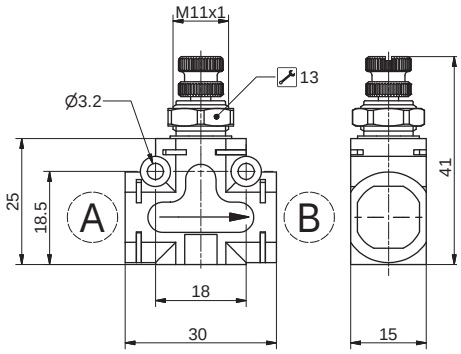

Ordering code

551.11Ⓣ.Ⓐ.Ⓑ.XX

Ⓣ	VERSION
	1 = Unidirectional
	2 = Bidirectional
Ⓐ	Connection A see CONNECTIONS LIST
Ⓑ	Connection B see CONNECTIONS LIST
Ⓛ	CONNECTIONS LIST
	00 = None
	D4 = Straight Ø4
	D6 = Straight Ø6
	D8 = Straight Ø8
	L1 = Female banjo G1/8"
	G4 = Rotating banjo Ø 4
	G6 = Rotating banjo Ø 6
	G8 =Rotating banjo Ø 8
	M1 = G1/8 male
	M2 = G1/4 male
	F1 = G1/8 female

NOTE : For the dimension including cartridges see page CONNECTIONS
Example: 551.111.D6.D6.XX
Flow control valve, unidirectional, CONNECTIONS "A" and "B" Tube Ø6

Flow-rates curves 6 bar

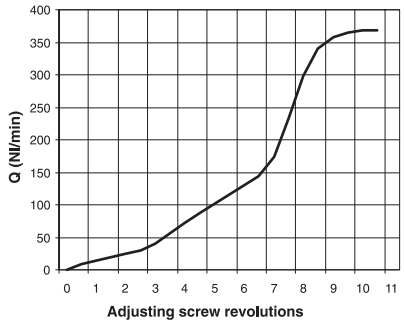

Pneumatic Symbol

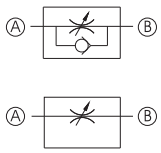

Operational characteristics

- The flow control valve is normally used to regulate the air flow and, as a consequence, for example, the speed of a cylinder. Two types of flow control valves are available: unidirectional and bidirectional. In the unidirectional valve the flow is regulated only in one direction while is free to move in the opposite direction; in the bidirectional valve the flow is regulated in both directions.
- Mounting options:
- panel mounting using the lock nut supplied as standard
- on DIN rail using the relevant adaptor kit (see accessories)
- with 90° bracket (see accessories)
- directly on the support plate thanks to two through holes on the body

Technical characteristics

Fluid	Filtered air, with or without lubrication
Connections	See CONNECTIONS LIST
Max working pressure (bar)	10 bar
Temperature °C	-5 - +50
Weight without connections	26 gr.
Ø Orifice size (mm)	Ø3 mm
Free exhaust flow rate in the opposite side of the regulation (for unidirectional version)	800 Nl/min.

1

In line pressure regulator

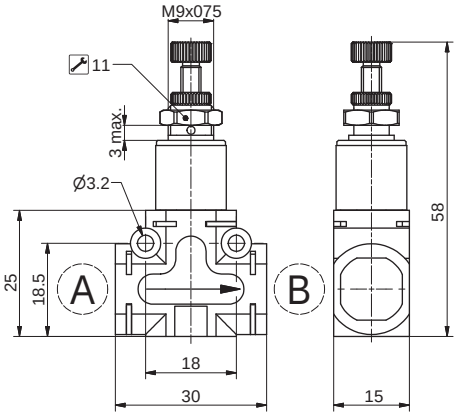

Ordering code

551.12Ⓣ.Ⓐ.Ⓑ.XX

Ⓣ	VERSION
	2 = 0 - 2 bar
	4 = 0 - 4 bar
	8 = 0 - 8 bar
Ⓐ	Connection A see CONNECTIONS LIST
Ⓑ	Connection B see CONNECTIONS LIST
Ⓛ	CONNECTIONS LIST
	00 = None
	D4 = Straight Ø4
	D6 = Straight Ø6
	D8 = Straight Ø8
	L1 = Female banjo G1/8"
	G4 = Rotating banjo Ø 4
	G6 = Rotating banjo Ø 6
	G8 = Rotating banjo Ø 8
	M1 = G1/8 male
	M2 = G1/4 male
	F1 = G1/8 female

NOTE : For the dimension including cartridges see page CONNECTIONS
Example: 551.128.D8.D8.XX : In line pressure regulator, Pressure range (bar) 0 - 8 bar. CONNECTIONS "A" and "B" Tube Ø8

Pneumatic Symbol

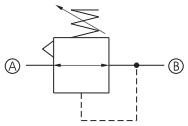

Operational characteristics

- The pressure regulator is a device which is used to reduce, regulate and stabilize the air pressure in a conduit in order to adapt it to the needs of the equipments to be supplied. The pressure regulator incorporates the relieving function.
- Mounting options:
- panel mounting using the lock nut supplied as standard
- on DIN rail using the relevant adaptor kit (see accessories)
- with 90° bracket (see accessories)
- directly on the support plate thanks to two through holes on the body

Technical characteristics

Fluid	Filtered air, with or without lubrication
Connections	See CONNECTIONS LIST
Max working pressure (bar)	10 bar
Temperature °C	-5 - +50
Weight without connections	31 gr.
Flow rate at 6 bar with Δp=1 (Nl/min)	180 Nl/min
Regulated Pressure range (bar)	0 - 2 bar / 0 - 4 bar / 0 - 8 bar

90° pressure regulator

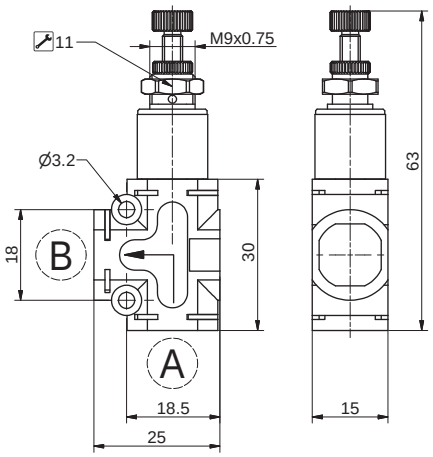

Ordering code

551.22Ⓣ.Ⓐ.Ⓑ.XX

Ⓣ	VERSION
	2 = 0 - 2 bar
	4 = 0 - 4 bar
	8 = 0 - 8 bar
Ⓐ	Connection A see CONNECTIONS LIST
Ⓑ	Connection B see CONNECTIONS LIST
Ⓛ	CONNECTIONS LIST
	00 = None
	D4 = Straight Ø4
	D6 = Straight Ø6
	D8 = Straight Ø8
	L1 = Female banjo G1/8"
	G4 = Rotating banjo Ø 4
	G6 = Rotating banjo Ø 6
	G8 = Rotating banjo Ø 8
	M1 = G1/8 male
	M2 = G1/4 male
	F1 = G1/8 female

NOTE : For the dimension including cartridges see page CONNECTIONS
Example: 551.224.M1.D6.XX
90° pressure regulator, Pressure range (bar) 0 - 4 bar. CONNECTIONS "A" Male G1/8 and "B" Tube Ø6

Pneumatic Symbol

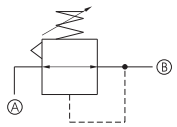

Operational characteristics

- The pressure regulator is a device which is used to reduce, regulate and stabilize the air pressure in a conduit in order to adapt it to the needs of the equipments to be supplied. The pressure regulator incorporates the relieving function.
- Mounting options:
- panel mounting using the lock nut supplied as standard
- on DIN rail using the relevant adaptor kit (see accessories)
- with 90° bracket (see accessories)
- directly on the support plate thanks to two through holes on the body

Technical characteristics

Fluid	Filtered air, with or without lubrication
Connections	See CONNECTIONS LIST
Max working pressure (bar)	10 bar
Temperature °C	-5 - +50
Weight without connections	31 gr.
Flow rate at 6 bar with Δp=1 (Nl/min)	180 Nl/min
Regulated Pressure range (bar)	0 - 2 bar / 0 - 4 bar / 0 - 8 bar

1

Blocking valve

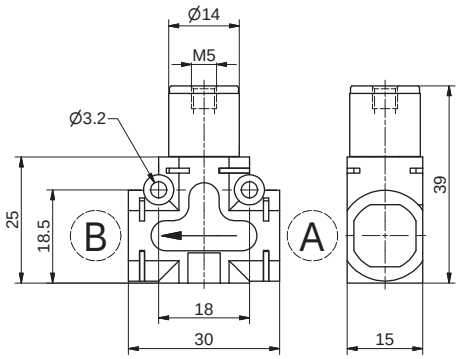

Ordering code

551.13Ⓣ.Ⓐ.Ⓑ.XX

Ⓣ	VERSION
	1 = Unidirectional
	2 = Bidirectional
Ⓐ	Connection A see CONNECTIONS LIST
Ⓑ	Connection B see CONNECTIONS LIST
Ⓛ	CONNECTIONS LIST
	00 = None
	D4 = Straight Ø4
	D6 = Straight Ø6
	D8 = Straight Ø8
	L1 = Female banjo G1/8"
	G4 = Rotating banjo Ø 4
	G6 = Rotating banjo Ø 6
	G8 = Rotating banjo Ø 8
	M1 = G1/8 male
	M2 = G1/4 male
	F1 = G1/8 female

NOTE : For the dimension including cartridges see page CONNECTIONS
Example: 551.131.D4.D4.XX
In line blocking valve, unidirectional, CONNECTIONS "A" and "B" Tube Ø4

Piloting curves

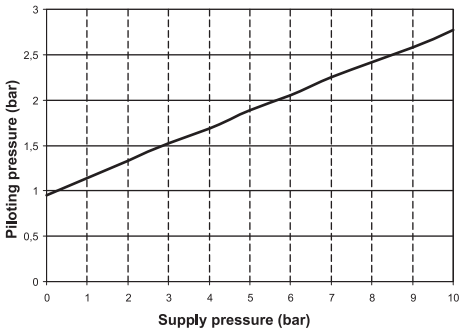

Pneumatic Symbol

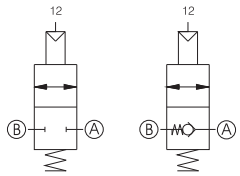

Operational characteristics

- The blocking valve function is to maintain the circuit downstream pressure in the event of loss of supply pressure. It is normally fitted directly onto the cylinder connections ports in order to ensure that, in case of accidental loss of the supply pressure, the units positions is maintained. This is achieved as the blocking valve preserves the pressure inside the pressurised chamber. Blocking valves can be unidirectional or bidirectional. In the unidirectional version the air flow is free in one direction while in order to allow the flow in the opposite direction is necessary to send a pneumatic signal to the unit connection 12. The bidirectional version requires a pneumatic signal on connection 12 to allow the flow in any of the two directions.
- Mounting options:
- on DIN rail using the relevant adaptor kit (see accessories)
- with 90° bracket (see accessories)
- directly on the support plate thanks to two through holes on the body

Technical characteristics

Fluid	Filtered air, with or without lubrication
Connections	See CONNECTIONS LIST
Working pressure	0,5 - 10 bar
Temperature °C	-5 - +50
Weight without connections	26 gr.
Flow rate at 6 bar with Δp=1 (Nl/min) Unidirectional and bidirectional version	285 Nl/min
Flow rate at 6 bar with free exhaust Unidirectional and bidirectional version	450 Nl/min

90° blocking valve

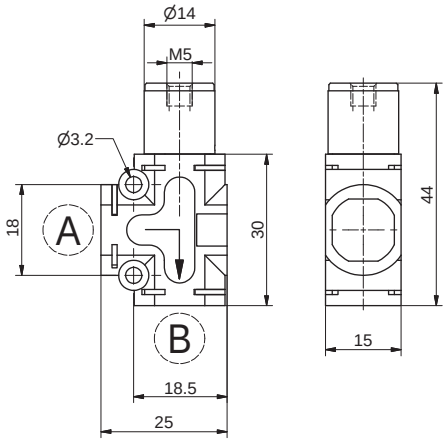

Ordering code

551.23Ⓣ.Ⓐ.Ⓑ.XX

Ⓣ	VERSION
	1 = Unidirectional
	2 = Bidirectional
Ⓐ	Connection A see CONNECTIONS LIST
Ⓑ	Connection B see CONNECTIONS LIST
Ⓛ	CONNECTIONS LIST
	00 = None
	D4 = Straight Ø4
	D6 = Straight Ø6
	D8 = Straight Ø8
	L1 = Female banjo G1/8"
	G4 = Rotating banjo Ø 4
	G6 = Rotating banjo Ø 6
	G8 = Rotating banjo Ø 8
	M1 = G1/8 male
	M2 = G1/4 male
	F1 = G1/8 female

NOTE : For the dimension including cartridges see page CONNECTIONS
Example: 551.231.M1.D6.XX
90° blocking valve, unidirectional, CONNECTIONS "A" Male G1/8 and "B" Tube Ø6

Piloting curves

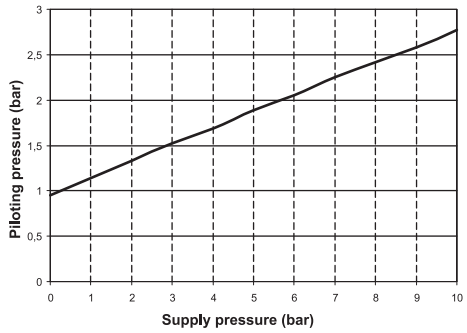

Pneumatic Symbol

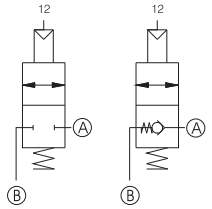

Operational characteristics

- The blocking valve function is to maintain the circuit downstream pressure in the event of loss of supply pressure. It is normally fitted directly onto the cylinder connections ports in order to ensure that, in case of accidental loss of the supply pressure, the units positions is maintained. This is achieved as the blocking valve preserves the pressure inside the pressurised chamber. Blocking valves can be unidirectional or bidirectional. In the unidirectional version the air flow is free in one direction while in order to allow the flow in the opposite direction is necessary to send a pneumatic signal to the unit connection 12. The bidirectional version requires a pneumatic signal on connection 12 to allow the flow in any of the two directions.
- Mounting options:
- on DIN rail using the relevant adaptor kit (see accessories)
- with 90° bracket (see accessories)
- directly on the support plate thanks to two through holes on the body

Technical characteristics

Fluid	Filtered air, with or without lubrication
Connections	See CONNECTIONS LIST
Working pressure	0,5 - 10 bar
Temperature °C	-5 - +50
Weight without connections	26 gr.
Flow rate at 6 bar with Δp=1 (Nl/min) Unidirectional and bidirectional version	285 Nl/min
Flow rate at 6 bar with free exhaust Unidirectional and bidirectional version	450 Nl/min

1

Circuit selector valve - OR

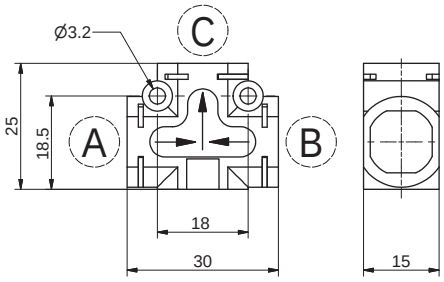

Ordering code

551.141.Ⓐ.Ⓑ.Ⓒ

Ⓐ	Connection A see CONNECTIONS LIST
Ⓑ	CONNECTIONS B see CONNECTIONS LIST
Ⓒ	Connection C see CONNECTIONS LIST
Ⓛ	CONNECTIONS LIST
	00 = None
	D4 = Straight Ø4
	D6 = Straight Ø6
	D8 = Straight Ø8
	L1 = Female banjo G1/8"
	G4 = Rotating banjo Ø 4
	G6 = Rotating banjo Ø 6
	G8 = Rotating banjo Ø 8
	M1 = G1/8 male
	M2 = G1/4 male
	F1 = G1/8 female

NOTE : For the dimension including cartridges see page CONNECTIONS
Example: 551.141.D8.D8.D8
Circuit selector valve OR, CONNECTIONS "A", "B" and "C" Tube Ø8

Pneumatic Symbol

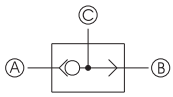

Operational characteristics

- These valves have two inlets and one output connection and are normally called high pressure selector valves as, when receiving two separate pressure supply, only allow the passage of the highest pressure. The most common application is to operate a component from two separate positions.
- Mounting options:
- on DIN rail using the relevant adaptor kit (see accessories)
- with 90° bracket (see accessories)
- directly on the support plate thanks to two through holes on the body

Technical characteristics

Fluid	Filtered air, with or without lubrication
Connections	See CONNECTIONS LIST
Max working pressure (bar)	10 bar
Temperature °C	-5 - +50
Weight without connections	10 gr.
Flow rate at 6 bar with Δp=1 (Nl/min)	600 Nl/min

Circuit selector valve - AND

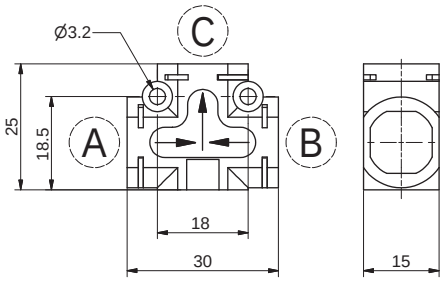

Ordering code

551.151.Ⓐ.Ⓑ.Ⓒ

Ⓐ	Connection A see CONNECTIONS LIST
Ⓑ	CONNECTIONS B see CONNECTIONS LIST
Ⓒ	Connection C see CONNECTIONS LIST
Ⓛ	CONNECTIONS LIST
	00 = None
	D4 = Straight Ø4
	D6 = Straight Ø6
	D8 = Straight Ø8
	L1 = Female banjo G1/8"
	G4 = Rotating banjo Ø 4
	G6 = Rotating banjo Ø 6
	G8 = Rotating banjo Ø 8
	M1 = G1/8 male
	M2 = G1/4 male
	F1 = G1/8 female

NOTE : For the dimension including cartridges see page CONNECTIONS
Example: 551.151.D6.D6.D6
Circuit selector valve AND, CONNECTIONS "A", "B" and "C" Tube Ø6

Pneumatic Symbol

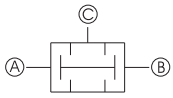

Operational characteristics

- These valves have two inlets and one output connection and are normally called low pressure selector valves as, when receiving two separate pressure supply, only allow the passage of the lowest pressure. The most common application is to operate a component from two separate positions.
- Mounting options:
- on DIN rail using the relevant adaptor kit (see accessories)
- with 90° bracket (see accessories)
- directly on the support plate thanks to two through holes on the body

Technical characteristics

Fluid	Filtered air, with or without lubrication
Connections	See CONNECTIONS LIST
Max working pressure (bar)	10 bar
Temperature °C	-5 - +50
Weight without connections	10 gr.
Flow rate at 6 bar with Δp=1 (Nl/min)	550 Nl/min

Quick exhaust valve

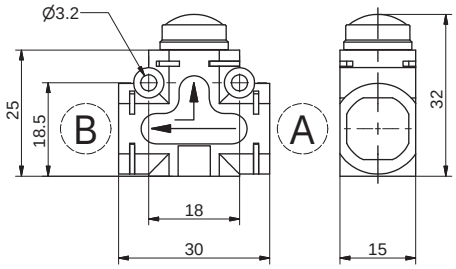

Ordering code	
551.161.Ⓐ.Ⓑ.XX	
Ⓐ	Connection A see CONNECTIONS LIST
Ⓑ	Connection B see CONNECTIONS LIST
Ⓛ	CONNECTIONS LIST
	00 = None
	D4 = Straight Ø4
	D6 = Straight Ø6
	D8 = Straight Ø8
	L1 = Female banjo G1/8"
	G4 = Rotating banjo Ø 4
	G6 = Rotating banjo Ø 6
	G8 =Rotating banjo Ø 8
	M1 = G1/8 male
	M2 = G1/4 male
	F1 = G1/8 female

NOTE : For the dimension including cartridges see page CONNECTIONS
Example: 551.161.D8.D8.XX
Quick exhaust valve, CONNECTIONS "A" and "B" Tube Ø8

Pneumatic Symbol

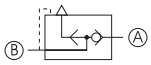

Operational characteristics

- These are 3 ways, two positions valves which can be directly mounted onto the actuator or between the actuator and the control valve. Their function is to discharge the air directly into the atmosphere without going through the pneumatic circuit enabling the actuator to reach the maximum speed.
- Mounting options:
- on DIN rail using the relevant adaptor kit (see accessories)
- with 90° bracket (see accessories)
- directly on the support plate thanks to two through holes on the body

Technical characteristics

Fluid	Filtered air, with or without lubrication
Connections	See CONNECTIONS LIST
Max working pressure (bar)	10 bar
Temperature °C	-5 - +50
Weight without connections	15 gr.
Flow rate at 6 bar with Δp=1 (Nl/min) (from 1 to 2)	250 Nl/min
Flow rate at 6 bar with free exhaust (from 2 to 3)	500 Nl/min

Pressure indicator

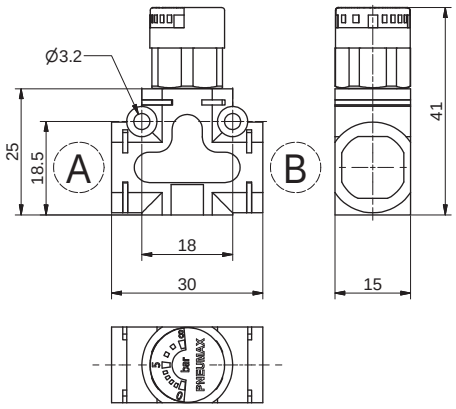

Ordering code	
551.178.Ⓐ.Ⓑ.XX	
Ⓐ	Connection A see CONNECTIONS LIST
Ⓑ	Connection B see CONNECTIONS LIST
Ⓛ	CONNECTIONS LIST
	00 = None
	D4 = Straight Ø4
	D6 = Straight Ø6
	D8 = Straight Ø8
	L1 = Female banjo G1/8"
	G4 = Rotating banjo Ø 4
	G6 = Rotating banjo Ø 6
	G8 = Rotating banjo Ø 8
	M1 = G1/8 male
	M2 = G1/4 male
	F1 = G1/8 female

NOTE : For the dimension including cartridges see page CONNECTIONS
Example: 551.178.D6.D4.XX
Pressure indicator, CONNECTIONS "A" Tube Ø6, "B" Tube Ø4

Pneumatic Symbol

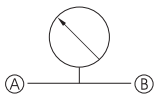

Operational characteristics

- The pressure visual indicator is a device which measures the pressure inside a pneumatic circuit. The 0 to 8 bar visual indicator makes very easy to monitor the pressure state inside the circuit. It can be use on its own or can be coupled with another device.
- Mounting options:
- on DIN rail using the relevant adaptor kit (see accessories)
- with 90° bracket (see accessories)
- directly on the support plate thanks to two through holes on the body

Technical characteristics

Fluid	Filtered air, with or without lubrication
Connections	See CONNECTIONS LIST
Max working pressure (bar)	8 bar
Visualization scale	0 - 8 bar
Temperature °C	-5 - +50
Weight without connections	20,5 gr.

In line progressive start-up valve

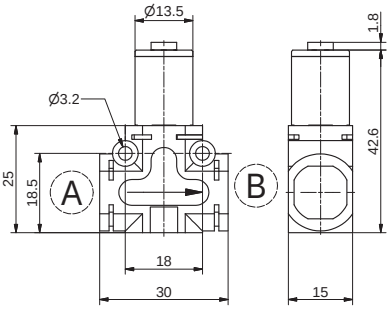

Ordering code

551.181.Ⓐ.Ⓑ.XX

Ⓐ	Connection A see CONNECTIONS LIST
Ⓑ	Connection B see CONNECTIONS LIST
Ⓛ	CONNECTIONS LIST
	00 = None
	D4 = Straight Ø4
	D6 = Straight Ø6
	D8 = Straight Ø8
	L1 = Female banjo G1/8"
	G4 = Rotating banjo Ø 4
	G6 = Rotating banjo Ø 6
	G8 = Rotating banjo Ø 8
	M1 = G1/8 male
	M2 = G1/4 male
	F1 = G1/8 female

NOTE : For the dimension including cartridges see page CONNECTIONS / Example: 551.181.D6.D4.XX : Progressive start-up, CONNECTIONS "A" Tube Ø6, "B" Tube Ø4

Piloting curves

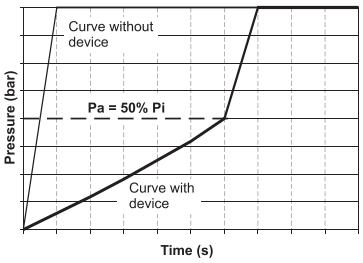

Pneumatic Symbol

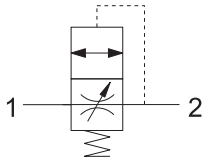

Adjustment curve

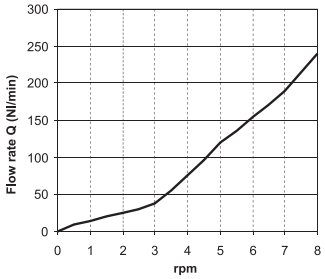

Operational characteristics

- The soft start valve is a device designed to gradually pressurise the downstream circuit until 50% of the upstream pressure value is reached.
- Once the 50% of the upstream pressure value is reached in the down stream circuit the valve fully opens allowing full air passage.
- The filling time can be adjusted thanks to the built in flow regulator.
- This device is used in order to ensure that during the pneumatic circuit start up the cylinders will return to theirs home position slowly avoiding collisions or sudden movements.

Technical characteristics

Fluid	Filtered air, with or without lubrication
Connections	See CONNECTIONS LIST
Working pressure (bar)	2 - 10 bar
Opening pressure (Pa)	50% of the inlet pressure (Pi)
Flow rate at 6 bar with free exhaust (Nl/min)	650 Nl/min (from 1 to 2 with opening ciruit)
Flow rate at 6 bar with Δp=1 (Nl/min)	350 Nl/min (from 1 to 2 with opening ciruit)
Flow rate at 6 bar with Δp=1 (Nl/min)	600 Nl/min (from 2 to 1 with opening pin)
Temperature °C	-5 - +50
Weight without connections	31 gr.

90° progressive start-up valve

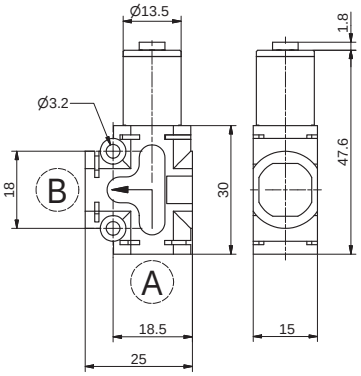

Ordering code

551.281.Ⓐ.Ⓑ.XX

Ⓐ	Connection A see CONNECTIONS LIST
Ⓑ	Connection B see CONNECTIONS LIST
Ⓛ	CONNECTIONS LIST
	00 = None
	D4 = Straight Ø4
	D6 = Straight Ø6
	D8 = Straight Ø8
	L1 = Female banjo G1/8"
	G4 = Rotating banjo Ø 4
	G6 = Rotating banjo Ø 6
	G8 = Rotating banjo Ø 8
	M1 = G1/8 male
	M2 = G1/4 male
	F1 = G1/8 female

NOTE : For the dimension including cartridges see page CONNECTIONS / Example: 551.281.M1.D4.XX: Progressive start-up, CONNECTIONS "A" Tube Ø6, "B" Tube Ø4

Piloting curves

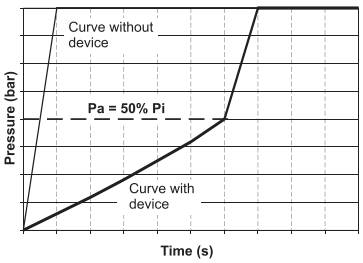

Pneumatic Symbol

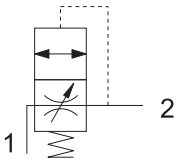

Adjustment curve

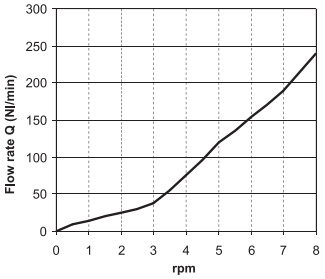

Operational characteristics

- The soft start valve is a device designed to gradually pressurise the downstream circuit until 50% of the upstream pressure value is reached.
- Once the 50% of the upstream pressure value is reached in the down stream circuit the valve fully opens allowing full air passage.
- The filling time can be adjusted thanks to the built in flow regulator.
- This device is used in order to ensure that during the pneumatic circuit start up the cylinders will return to theirs home position slowly avoiding collisions or sudden movements.

Technical characteristics

Fluid	Filtered air, with or without lubrication
Connections	See CONNECTIONS LIST
Max working pressure (bar)	2 - 10 bar
Opening pressure (Pa)	50% of the inlet pressure (Pi)
Flow rate at 6 bar with free exhaust (Nl/min)	650 Nl/min (from 1 to 2 with opening ciruit)
Flow rate at 6 bar with Δp=1 (Nl/min)	350 Nl/min (from 1 to 2 with opening ciruit)
Flow rate at 6 bar with Δp=1 (Nl/min)	600 Nl/min (from 2 to 1 with opening pin)
Temperature °C	-5 - +50
Weight without connections	31 gr.

In line blocking valve + flow control valve

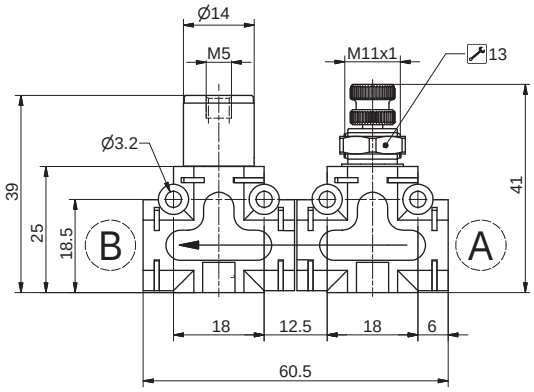

Ordering code

551.1F Ⓣ.Ⓐ.Ⓑ.XX

Ⓣ	VERSION
	1 = Unidirectional blocking valve + Unidirectional flow control valve
	2 = Bidirectional blocking valve + Bidirectional flow control valve
	3 = Unidirectional blocking valve + Bidirectional flow control valve
	4 = Bidirectional blocking valve + Unidirectional flow control valve
Ⓐ	see CONNECTIONS LIST A
Ⓑ	see CONNECTIONS LIST B
Ⓛ	CONNECTIONS LIST
	00 = None
	D4 = Straight Ø4
	D6 = Straight Ø6
	D8 = Straight Ø8
	L1 = Female banjo G1/8"
	G4 = Rotating banjo Ø 4
	G6 = Rotating banjo Ø 6
	G8 = Rotating banjo Ø 8
	M1 = G1/8 male
	M2 = G1/4 male
	F1 = G1/8 female

NOTE : For the dimension including cartridges see page CONNECTIONS
Example: 551.1F1.00.00.XX
In line unidirectional blocking valve + unidirectional flow control valve, without CONNECTIONS "A" and "B"

Piloting curves

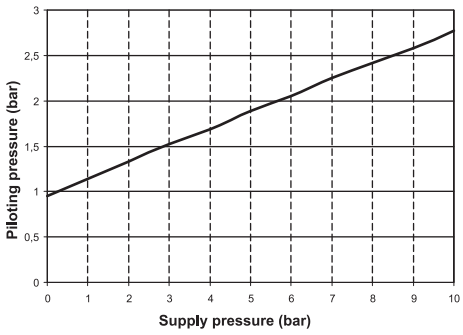

Pneumatic Symbol

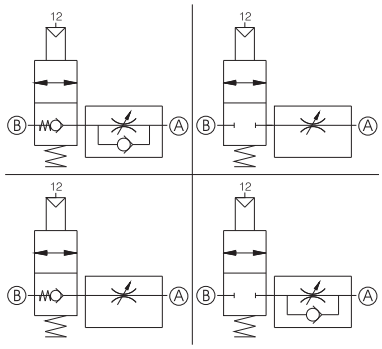

Operational characteristics

- The combination of this two functions ensures that the downstream pressure is maintained in case of accidental loss of supply pressure and at the same time grants the possibility to regulate the circuit flow rate. A typical application of this combination is close to or directly assembled onto the actuator connection ports. This allows to keep pressurised the cylinder chamber in case of accidental loss of supply pressure and to regulate the exhaust flow rate when the blocking valve is actuated.
- The possible combinations are the following:
- unidirectional blocking valve + unidirectional flow control valve.
- bidirectional blocking valve + bidirectional flow control valve
- bidirectional blocking valve + unidirectional flow control valve
- unidirectional blocking valve + bidirectional flow control valve

Technical characteristics

Fluid	Filtered air, with or without lubrication
Connections	See CONNECTIONS LIST
Max working pressure (bar)	0,5 - 10 bar
Temperature °C	-5 - +50
Ø Orifice size (mm)	Ø3 mm
Flow rate at 6 bar with Δp=1 (Nl/min)	285 Nl/min
Weight without connections	62 gr.

1

90° blocking valve + flow control valve

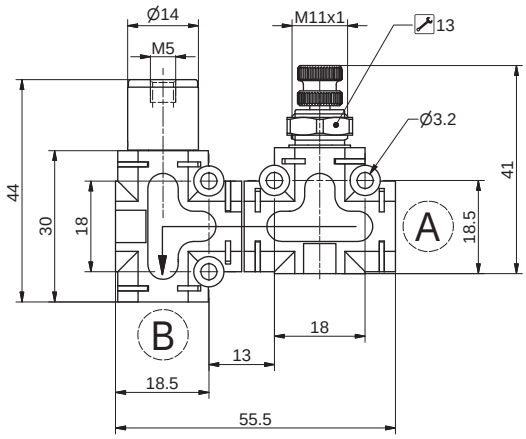

Ordering code

551.2F❶.Ⓐ.Ⓑ.XX

❶	VERSION
	1 = Unidirectional blocking valve + Unidirectional flow control valve
	2 = Bidirectional blocking valve + Bidirectional flow control valve
	3 = Unidirectional blocking valve + Bidirectional flow control valve
	4 = Bidirectional blocking valve + Unidirectional flow control valve
Ⓐ	see CONNECTIONS LIST A
Ⓑ	see CONNECTIONS LIST B
Ⓛ	CONNECTIONS LIST
	00 = None
	D4 = Straight Ø4
	D6 = Straight Ø6
	D8 = Straight Ø8
	L1 = Female banjo G1/8"
	G4 = Rotating banjo Ø 4
	G6 = Rotating banjoØ 6
	G8 = Rotating banjo Ø 8
	M1 = G1/8 male
	M2 = G1/4 male
	F1 = G1/8 female

NOTE : For the dimension including cartridges see page CONNECTIONS
Example: 551.2F1.00.00.XX
90° unidirectional blocking valve + unidirectional flow control valve, without CONNECTIONS "A" and "B"

Piloting curves

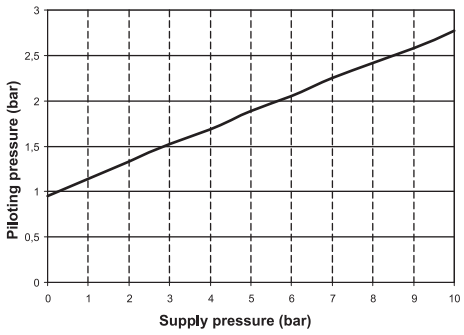

Pneumatic Symbol

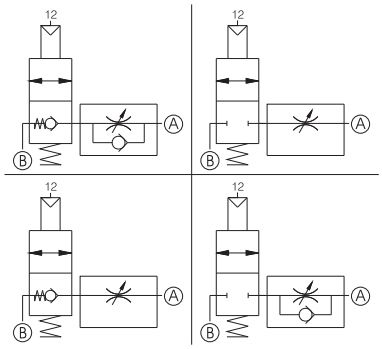

Operational characteristics

- The combination of this two functions ensures that the downstream pressure is maintained in case of accidental loss of supply pressure and at the same time grants the possibility to regulate the circuit flow rate. A typical application of this combination is close to or directly assembled onto the actuator connection ports. This allows to keep pressurised the cylinder chamber in case of accidental loss of supply pressure and to regulate the exhaust flow rate when the blocking valve is actuated.
- The possible combinations are the following:
- 90° unidirectional blocking valve + unidirectional flow control valve.
- 90° bidirectional blocking valve + bidirectional flow control valve
- 90° bidirectional blocking valve + unidirectional flow control valve
- 90° unidirectional blocking valve + bidirectional flow control valve

Technical characteristics

Fluid	Filtered air, with or without lubrication
Connections	See CONNECTIONS LIST
Max working pressure (bar)	0,5 - 10 bar
Temperature °C	-5 - +50
Ø Orifice size (mm)	Ø3 mm
Flow rate at 6 bar with Δp=1 (Nl/min)	285 Nl/min
Weight without connections	62 gr.

In line blocking valve + quick exhaust valve

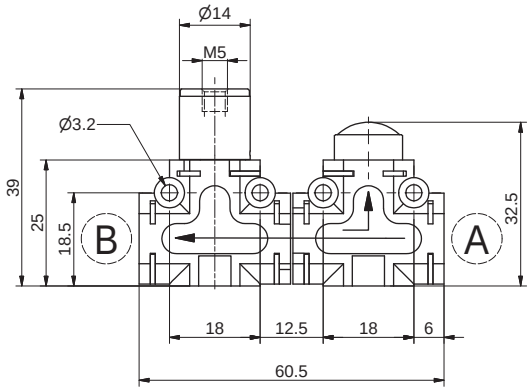

Ordering code

551.1G❶.Ⓐ.Ⓑ.XX

❶	VERSION
	1 = Unidirectional blocking valve + quick exhaust valve
	2 = Bidirectional blocking valve + quick exhaust valve
Ⓐ	Connection A see CONNECTIONS LIST
Ⓑ	Connection B see CONNECTIONS LIST
❶	CONNECTIONS LIST
	00 = None
	D4 = Straight Ø4
	D6 = Straight Ø6
	D8 = Straight Ø8
	L1 = Female banjo G1/8"
	G4 = Rotating banjo Ø 4
	G6 = Rotating banjo Ø 6
	G8 = Rotating banjo Ø 8
	M1 = G1/8male
	M2 = G1/4 male
	F1 = G1/8 female

NOTE : For the dimension including cartridges see page CONNECTIONS
Example: 551.1G1.00.00.XX
In line unidirectional blocking valve + quick exhaust valve, without CONNECTIONS "A" and "B"

Piloting curves

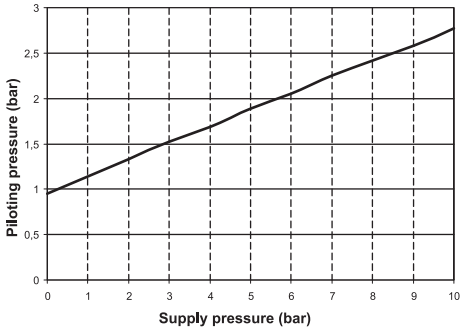

Pneumatic Symbol

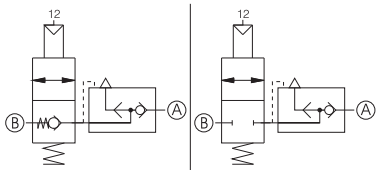

Operational characteristics

- The combination of this two functions ensures that the downstream pressure is maintained in case of accidental loss of supply pressure and at the same time allows for the air to be directly discharged into the atmosphere without going through the pneumatic circuit. A typical application of this combination is close to or directly assembled onto the actuator connection ports. This allows to keep pressurised the cylinder chamber in case of accidental loss of supply pressure and to quickly discharge the same chamber when the blocking valve is actuated.
- The possible combination are the following:
- unidirectional blocking valve + quick exhaust valve
- bidirectional blocking valve + quick exhaust valve.

Technical characteristics

Fluid	Filtered air, with or without lubrication
Connections	See CONNECTIONS LIST
Max working pressure (bar)	0,5 - 10 bar
Temperature °C	-5 - +50
Weight without connections	51 gr.
Flow rate at 6 bar with Δp=1 (Nl/min)	285 Nl/min

1

90° blocking valve + quick exhaust valve

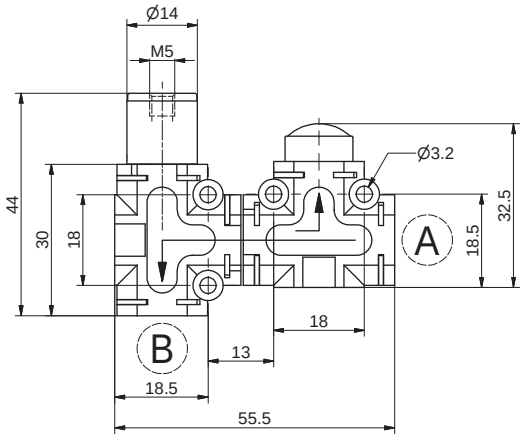

Ordering code

551.2G🅣.🅐.🅑.XX

🅣	VERSION
	1 = 90° Unidirectional blocking valve + quick exhaust valve
	2 = 90° Bidirectional blocking valve + quick exhaust valve
🅐	Connection A see CONNECTIONS LIST
🅑	Connection B see CONNECTIONS LIST
🅛	CONNECTIONS LIST
	00 = None
	D4 = Straight Ø4
	D6 = Straight Ø6
	D8 = Straight Ø8
	L1 = Female banjo G1/8"
	G4 = Rotating banjo Ø 4
	G6 = Rotating banjo Ø 6
	G8 = Rotating banjo Ø 8
	M1 = G1/8 male
	M2 = G1/4 male
	F1 = G1/8female

NOTE : For the dimension including cartridges see page CONNECTIONS
Example: 551.2G1.00.00.XX
90° unidirectional blocking valve + quick exhaust valve, without CONNECTIONS "A" and "B"

Piloting curves

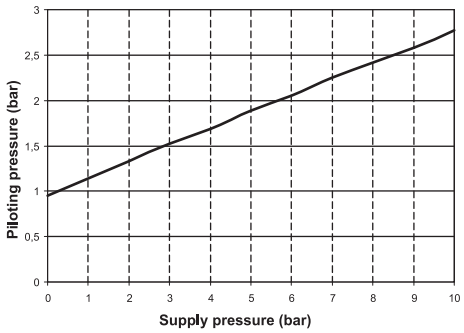

Pneumatic Symbol

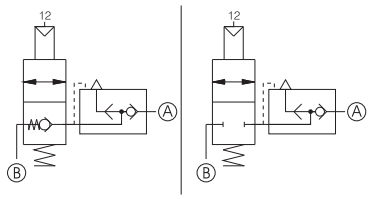

Operational characteristics

- The combination of this two functions ensures that the downstream pressure is maintained in case of accidental loss of supply pressure and at the same time allows for the air to be directly discharged into the atmosphere without going through the pneumatic circuit. A typical application of this combination is close to or directly assembled onto the actuator connection ports. This allows to keep pressurised the cylinder chamber in case of accidental loss of supply pressure and to quickly discharge the same chamber when the blocking valve is actuated.
- The possible combination are the following:
- 90° unidirectional blocking valve + quick exhaust valve
- 90° bidirectional blocking valve + quick exhaust valve.

Technical characteristics

Fluid	Filtered air, with or without lubrication
Connections	See CONNECTIONS LIST
Max working pressure (bar)	0,5 - 10 bar
Temperature °C	-5 - +50
Weight without connections	51 gr.
Flow rate at 6 bar with Δp=1 (Nl/min)	285 Nl/min

1

In line pressure regulator + pressure indicator

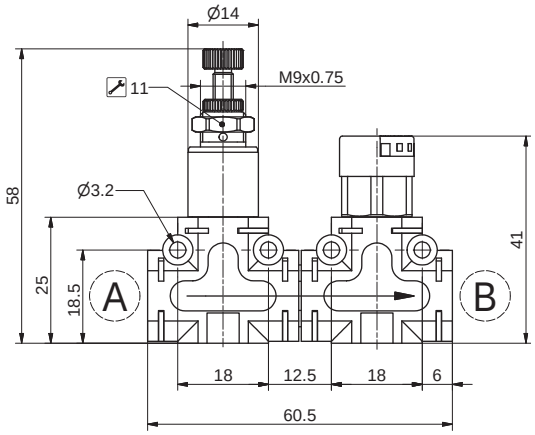

Ordering code

551.1H(T).(A).(B).XX

(T)	VERSION
	2 = 0 - 2 bar
	4 = 0 - 4 bar
	8 = 0 - 8 bar
(A)	Connection A see CONNECTIONS LIST
(B)	Connection B see CONNECTIONS LIST
(L)	CONNECTIONS LIST
	00 = None
	D4 = Straight Ø4
	D6 = Straight Ø6
	D8 = Straight Ø8
	L1 = Female banjo G1/8"
	G4 = Rotating banjo Ø 4
	G6 = Rotating banjo Ø 6
	G8 = Rotating banjo Ø 8
	M1 = G1/8 male
	M2 = G1/4 male
	F1 = G1/8 female

NOTE : For the dimension including cartridges see page CONNECTIONS
Example: 551.1H2.M1.D4.XX: In line pressure regulator, adjusting range 0 - 2 bar + pressure indicator, CONNECTIONS "A" Male G 1/8 and "B" Tube Ø4

Pneumatic Symbol

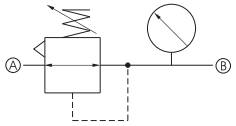

Operational characteristics

- The combination of this two functions ensures the possibility to regulate the downstream pressure while directly visualising the adjusted pressure value.
- The possible combinations are the following:
- 0 to 2 bar pressure regulator + pressure visual indicator
- 0 to 4 bar pressure regulator + pressure visual indicator
- 0 to 8 bar pressure regulator + pressure visual indicator
- the visual indicator Pressure range (bar) is always 0 to 8 bar

Technical characteristics

Fluid	Filtered air, with or without lubrication
Connections	See CONNECTIONS LIST
Max working pressure (bar)	8 bar
Temperature °C	-5 - +50
Visualization scale	0 - 8 bar
Regulated Pressure range (bar)	0 - 2 bar / 0 - 4 bar / 0 - 8 bar
Weight without connections	62 gr.

90° pressure regulator + pressure indicator

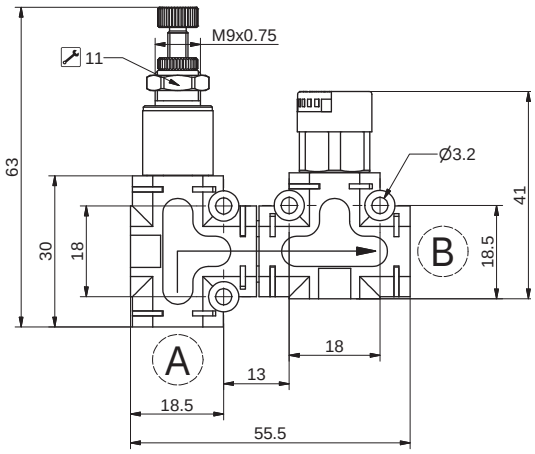

Ordering code

551.2H(T).(A).(B).XX

(T)	VERSION
	2 = 0 - 2 bar
	4 = 0 - 4 bar
	8 = 0 - 8 bar
(A)	Connection A see CONNECTIONS LIST
(B)	Connection B see CONNECTIONS LIST
(L)	CONNECTIONS LIST
	00 = None
	D4 = Straight Ø4
	D6 = Straight Ø6
	D8 = Straight Ø8
	L1 = Female banjo G1/8"
	G4 = Rotating banjo Ø 4
	G6 = Rotating banjo Ø 6
	G8 = Rotating banjo Ø 8
	M1 = G1/8 male
	M2 = G1/4 male
	F1 = G1/8 female

NOTE : For the dimension including cartridges see page CONNECTIONS
Example: 551.2H2.M1.D4.XX: 90° pressure regulator, adjusting range 0 - 2 bar + pressure indicator, CONNECTIONS "A" Male G 1/8 and "B" Tube Ø4

Pneumatic Symbol

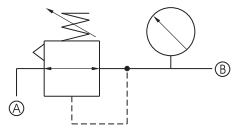

Operational characteristics

- The combination of this two functions ensures the possibility to regulate the downstream pressure while directly visualising the adjusted pressure value.
- The possible combinations are the following:
- 0 to 2 bar pressure regulator + pressure visual indicator
- 0 to 4 bar pressure regulator + pressure visual indicator
- 0 to 8 bar pressure regulator + pressure visual indicator
- the visual indicator Pressure range (bar) is always 0 to 8 bar

Technical characteristics

Fluid	Filtered air, with or without lubrication
Connections	See CONNECTIONS LIST
Max working pressure (bar)	8 bar
Temperature °C	-5 - +50
Visualization scale	0 - 8 bar
Regulated Pressure range (bar)	0 - 2 bar / 0 - 4 bar / 0 - 8 bar
Weight without connections	62 gr.

1

Coupling kit (pins and forks)

Ordering code

55160

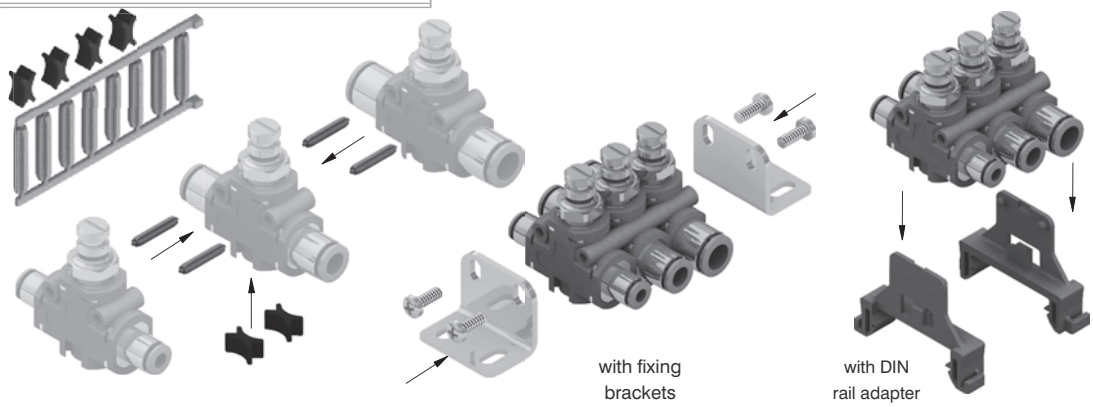

Weight 2,5 gr. - The kit, which includes a series of pins and forks, enables to join together in a fast and safe way the function fittings. The pins, once inserted in the front holes, ensure resistance against forces applied perpendicularly and sideway (for example the insertion of the tube in the cartridges). The forks, once located in the profiled housing ensures that the parts are held together tightly. The kit allows for 5 function fittings to be mounted together.

Fixing brackets

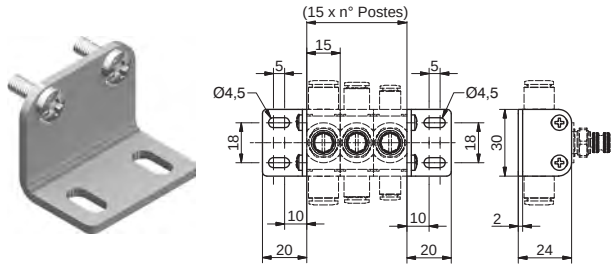

Ordering code

55150

Weight gr. 18
The kit comprises two fixing brackets and the screws

DIN rail adapter

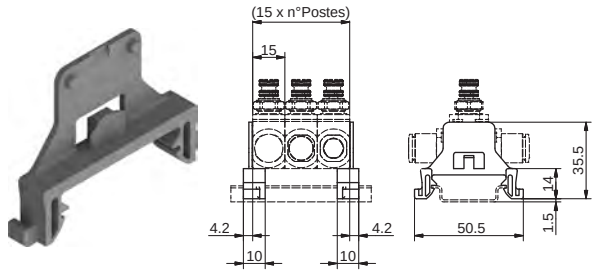

Ordering code

55116

Weight gr. 4
The kit comprises two adapters

Ø4 straight cartridge

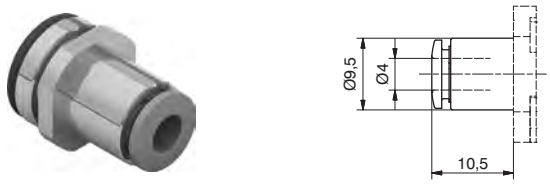

Ordering code

551KD4

Weight 7,5 gr.

Ø6 straight cartridge

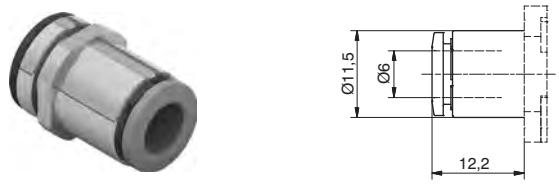

Ordering code

551KD6

Weight 7,3 gr.

Ø8 straight cartridge

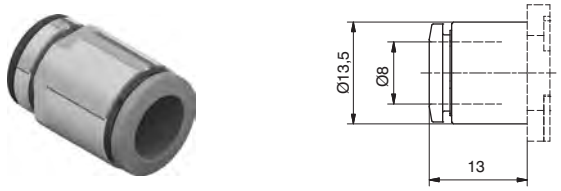

Ordering code

551KD8

Weight 7 gr.

Ø4 banjo PL cartridge

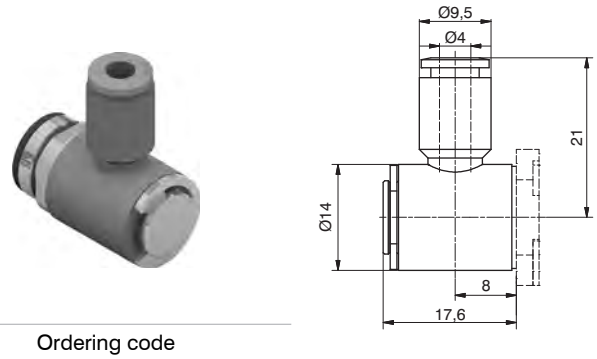

Ordering code

551KG4

Weight 13,6 gr.

Ø6 banjo PL cartridge

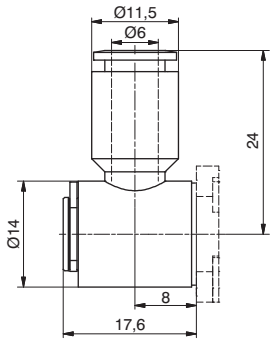

Ordering code

551KG6

Weight 14 gr.

Ø8 banjo PL cartridge

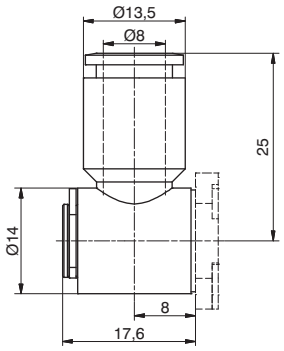

Ordering code

551KG8

Weight 14,3 gr.

G1/8" banjo female cartridge

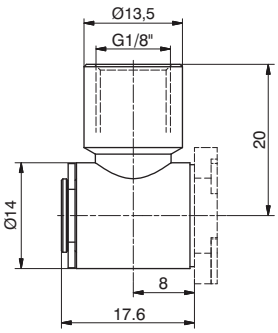

Ordering code

551KL1

Weight 30 gr.

G1/8" male straight cartridge

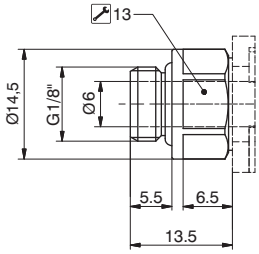

Ordering code

551KM1

Weight 14 gr.

G1/4" male straight cartridge

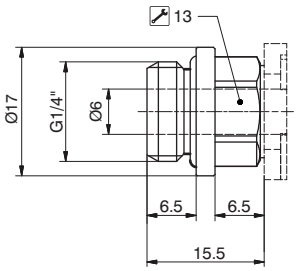

Ordering code

551KM2

Weight 20 gr.

G1/8" female straight cartridge

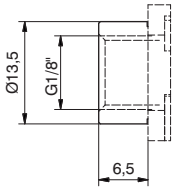

Ordering code

551KF1

Weight 9 gr.

Connection for multiple function

Ordering code

551KUU

Weight 14 gr.

Ordering code

1

General

This new type of miniaturised pressure regulators are mostly indicated for the use on the secondary level of the pneumatic circuits.
Thanks to the contained dimensions are particularly indicated to be used very closely or directly mounted onto the consumption.

Three versions are available.

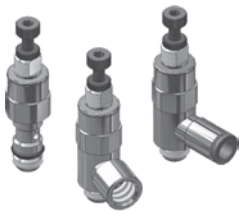

Version rod G1/8" swivel ring with female thread G 1/8" and G 1/4" or push-in fitting for tube Ø4, Ø6 and Ø8

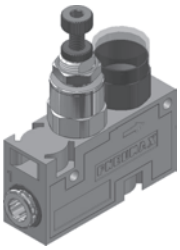

model with body in technopolymer integrated gauge and quick coupling fittings for tube Ø4 and Ø6.

G/1/8" model to be directly mounted onto the valve
Compact design to be directly mounted onto the valves uses standard swivel rings with G1/8" female thread (ref 41218) or quick coupling fittings for tube sizes.
It is also possible to supply the regulating shaft without the swivel ring.

Model with body in technopolymer and integrated gauge
is the more complete solution, comprises a movable gauge which enables to check the regulated pressure
Is manufactured using the same regulating unit as the base model fitted into a technopolymer body on which are inserted two quick coupling cartridges , 4mm or 6mm tube for inlet and outlet connections; two side plates lock the cartridges and gauge in position.
It is possible to join together more than one regulator by means of a dedicated adaptor made of technopolymer which must be inserted in the appropriate slot. (the air must be supplied independently to each regulator.)
Several mounting solutions are available: wall mounting via two mounting holes, on DIN rail using the specific accessories or on panels.

Mounting solutions

Several mounting solution are available:

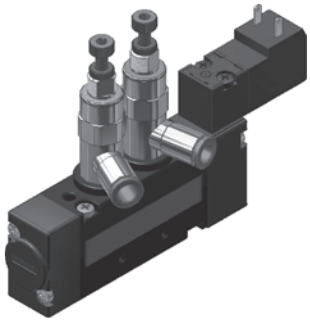

G/1/8" model to be directly mounted onto the valve:
Directly mounted onto the valves threaded connections (consumptions)

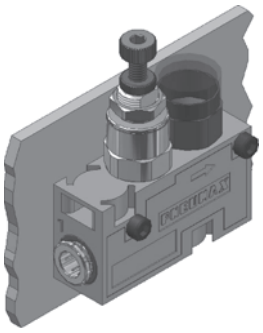

Model with body in technopolymer and integrated gauge:
Wall mounting via the mounting holes on the body

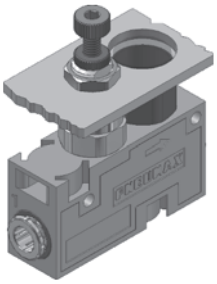

Model with body in technopolymer and integrated gauge:
Panel mounting via the locking nut

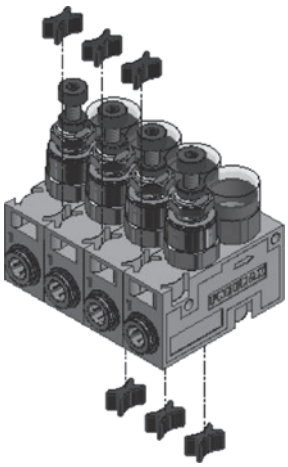

Model with body in technopolymer and integrated gauge:
In batteries using the appropriate "X" shaped connecting insert.

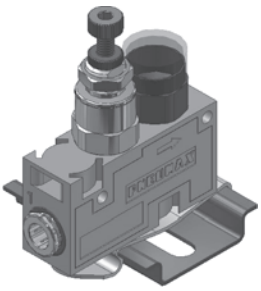

Model with body in technopolymer and integrated gauge:
On DIN rail using the specific accessories

Miniaturised pressure regulators

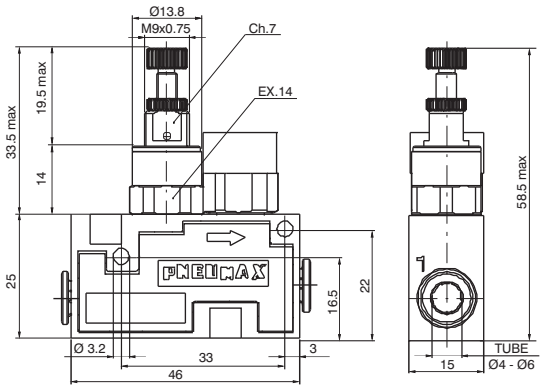

Ordering code

17522A Ⓒ.Ⓡ

Ⓒ	CONNECTIONS
	4= Tube Ø4mm
	6= Tube Ø6mm
Ⓡ	REGULATION RANGE
	C = 0 - 8 bar
	B = 0 - 4 bar
	A = 0 - 2 bar

Example: Miniaturised pressure regulators with technopolymer body and integrated gauge, with quick coupling cartridges for tube Ø6 mm and tube Ø4 mm, pressure regulation range 0 - 8 bar

Operational characteristics

- Regulating cartridge = Nickel-plated brass
- Regulator body = Technopolymer
- Seals = Oil resistant nitrilic rubber (NBR)
- Plunger spring = AISI 302
- Regulating spring = Spring suitable steel
- Plunger = Oil resistant nitrilic rubber (NBR)
- Other parts = Brass

Technical characteristic

Max working pressure (bar)	10 bar
Temperature °C	-5 - + 50
Flow rate at 6 bar with Δp=1 (Nl/min)	120 Nl/min.
Inlet connections sizes	Ø4 - Ø6
Consumption connection sizes	Ø4 - Ø6
Mounting positioning	Any

Miniaturised pressure regulators

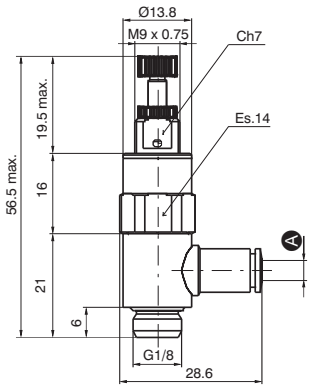

Ordering code

17602A Ⓐ.Ⓡ

Ⓐ	SWIVEL RING
	0= None
	1= Swivel ring G1/8" female
	4= Tube Ø4mm
	6= Tube Ø6mm
	8= Tube Ø8mm
Ⓡ	REGULATION RANGE
	C = 0 - 8 bar
	B = 0 - 4 bar
	A = 0 - 2 bar

Example: Miniaturised pressare regulators, version rod G1/8" swivel ring with female thread G 1/8", pressure regulation range 0 - 8 bar

Operational characteristics

- Regulating cartridge = Nickel-plated brass
- Regulator body = Nickel-plated brass
- Seals = Oil resistant nitrilic rubber (NBR)
- Plunger spring = AISI 302
- Regulating spring = Spring suitable steel
- Plunger = Oil resistant nitrilic rubber (NBR)
- Other parts = Brass

Technical characteristic

Max working pressure (bar)	10 bar
Temperature °C	-5 - + 50
Flow rate at 6 bar with Δp=1 (Nl/min)	120 Nl/min.
Inlet connections sizes	G1/8"
Consumption connection sizes	G1/8" - Ø4 - Ø6 - Ø8
Mounting positioning	Any

Miniaturised pressure regulators

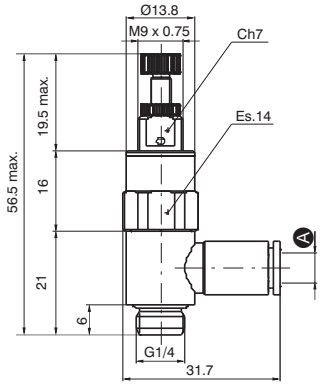

Ordering code

17602B Ⓐ.Ⓡ

Ⓐ	SWIVEL RING
	0= None
	1= Swivel ring G1/4" female
	6= Tube Ø6mm
	8= Tube Ø8mm
Ⓡ	REGULATION RANGE
	C = 0 - 8 bar
	B = 0 - 4 bar
	A = 0 - 2 bar

Example: Miniaturised pressare regulators, version rod G1/8" swivel ring with female thread G 1/8", pressure regulation range 0 - 8 bar

Operational characteristics

- Regulating cartridge = Nickel-plated brass
- Regulator body = Nickel-plated brass
- Seals = Oil resistant nitrilic rubber (NBR)
- Plunger spring = AISI 302
- Regulating spring = Spring suitable steel
- Plunger = Oil resistant nitrilic rubber (NBR)
- Other parts = Brass

Technical characteristic

Max working pressure (bar)	10 bar
Temperature °C	-5 - + 50
Flow rate at 6 bar with Δp=1 (Nl/min)	120 Nl/min.
Inlet connections sizes	G1/4"
Consumption connection sizes	G1/4" - Ø4 - Ø6 - Ø8
Mounting positioning	Any

Technical data for push-in fittings

TECHNICAL DATA

Working temperature:	-20°C +70°C
Maxium working pressure:	10 bar
Fluid:	Compressed air (others fluids on request)
Materials:	Nichel-plated brass body
	Brass grip
	Silicone free NBR gaskets
Thread:	Cylindrical with O-Ring
Maximum torque	
Thread: M3:	0,4 Nm
Thread: M6 and M6x0,75:	1,3 Nm

MAIN FEATURES

1 Can be inserted and extracted with one hand
2 Suitable for tube Rilsan, Polyurethane, Nylon, Polyethylene
3 Supercompact
4 Extremely lightweight yet sturdy
5 O-Ring provided with his own seat to ensure seal with polished surface
6 Suitable for vacuum application

1

RDR Straight male adaptor (parallel)

Ordering code

RDR3.40-MH05

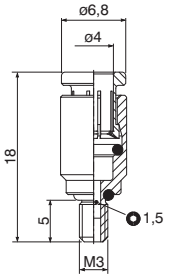

RDR Straight male adaptor (parallel)

Ordering code

RDR6.40-Ⓥ

Ⓥ	VERSION
	MH12=M6, H=12mm
	FH12=M6x0,75, H=12mm

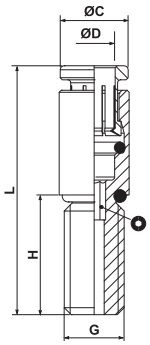

CODE	ØD	G	ØC	H	L	O
RDR6.40-MH12	4	M6	6,8	12	25	2
RDR6.40-FH12	4	M6x0,75	6,8	12	25	2

RGR Complete single banjo with stem

Ordering code

RGR3.40-MH05

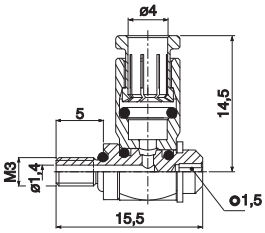

RGR Complete single banjo with stem

Ordering code

RGR6.40-Ⓥ

Ⓥ	VERSION
	MH12=M6, H=12mm
	FH12=M6x0,75, H=12mm

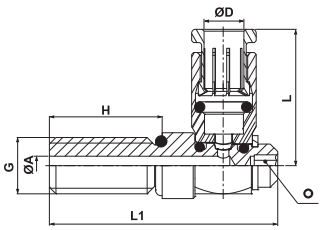

CODE	ØD	G	ØA	H	L1	L	O
RGR6.40-MH12	4	M6	2	12	24,3	14,5	2
RGR6.40-FH12	4	M6x0,75	2	12	24,3	14,5	2

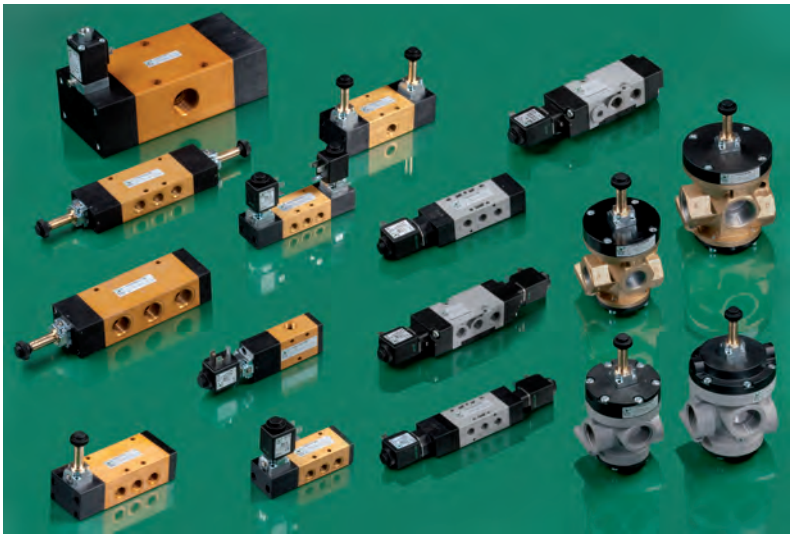

SOLENOID VALVES

Direct operated solenoid valves (Series 300)
Miniature solenoid valves 10-15-22 mm modular and Bistable
Electric pilot CNOMO 30 mm / Solenoid valves 32 mm / **"CURUS"** homologated.

Electrodistributors (Series 800)
M5 compact (series 805) - G 1/8" (series 808) individual, for manifold - (Series 888), G 1/8" - G 1/4"

Solenoid valves 3/2, 5/2, 5/3, G1/8" ÷ G1" (Series 400)
G 1/8" ECO and TECNO-ECO G 1/8"
G 1/4" compact series and TECNO-ECO G1/4"
G 1/2" compact series
G 1"

Pneumatic actuated valves and solenoid valves - poppet system 2/2, 3/2, 5/2 - M5" ÷ G1" (Series 700 - T700 - N776)
Valves and solenoid valves G 3/8" / G 3/4" / G 1" for compressed air and vacuum
Valves and solenoid valves G 3/8" / G 3/4" / G 1" for comèpressed air and vacuum in Technopolymer
Valves and solenoid valves G 1-1/2" for compressed air and vacuum
2/2 Pad Valves, for compressed air

Solenoid valves NAMUR Interface 3/2, 4/2, 5/2 (Series 514 and T514)
G 1/4" NAMUR interface

Distributors and electrodistributors ISO 5599/1
5/2, 5/3 - Size 1, 2 and 3 (Series 1000-1010)
ISO 5599/1 electrodistributors (Series 1000 M12) - 5/2 with M12 connector - Size 1, 2 and 3
Modular bases / Inlet blocks / Single use bases

Distributors and electrodistributors 5/2, 5/3 - Size 10, 18 and 26 mm (LINE, FLAT, VDMA or BASE) (Series 2000)
10-18-26 mm (LINE / FLAT) Sizes - 10 mm (BASE) Size - 18-26 mm (VDMA 24563-02) Sizes
ISO15407-2 Electrodistributors (Series 2700), 5/2 - 2 x 3/2

Electrodistributors 5/2 - 5/3 - 2x3/2 - 2x2/2, 12,5 Size - Series ENOVA®

Electrodistributors 5/2 - 5/3 - 2x3/2 - 2x2/2, 18,8 Size - Series OPTYMA32

General

The direct operated solenoid valve is the interface between pneumatic and electronic. In fact, it is actuated by an electrical signal and in turn gives a pneumatic signal directly available for small users or for actuating bigger pneumatic distributors.

A wide range of valves are needed for satisfying various applications. For this need we have available miniature components with very low volume and electrical impute as well as solenoid valves with large flow rate and power for heavy duty operations. These solenoid valves are usually 3/2, normally closed or normally open, but there are available the 2/2, closed or open, for vacuum and others.

Note that the direct operated valves can only be used with bases, individual or multiple with M5 or G 1/8" thread or with connections.

Some PNEUMAX solenoid valves are C UL US homologated valid for USA and Canada (file n. VAIU2.E206325, VAIU8.E206325). For more details, refer to the coding, in the following pages.

The 10mm and 15mm solenoid valves are certified by UL in compliance with both Canadian and USA safety requirements as recognized component and included in the **UL file E206325** and bear the “UL Recognized Component” marking.

The 10mm and 15mm solenoid valves, since they are devices for “class 2 circuits”, according with UL standard UL 429/CSA C22.2 N°139, are not considered dangerous for electric shock or fire and thus a **UL certification is not required for cables and connectors.**

Some solenoid valves, since they are devices for “class 2 circuits”, according with UL standard UL 429/CSA C22.2 N°139, are not considered dangerous for electric shock or fire and thus a **UL certification is not required for cables and connectors.**

Use and maintenance

Maintenance is normally not required for these components therefore the spare parts list is not provided.

Their construction complexity and low cost do not make repair economically viable. It's easier and more economic to replace the complete valve in case of malfunction.
For proper lubrication use only hydraulic oil class H such as Castrol type MAGNA GC 32.

General

This series of directly operated vales is characterized by its reduced dimensions. They are designed to be mounted individually or on manifold. The high operating speed and high flow rate in consideration of the reduced dimensions, in combination with the high compatibility of the material used to manufacture them ensure a high variety of possible application fields.
All valves have manual override as standard and are available in 3/2 configuration N.O. and N.C. as well as 2/2 N.C. both 12 or 24 V DC or AC. Electrical connection can be via co moulded cables or via connector, in this configuration a LED indicates the coil status. Ensure that the fixing screws are tightened with 0.15Nm maximum.
The 10mm Speed-up version are built in accordance to the ISO 15218-2003 standard with a flow rate of 24Nl/min. The coil integrates a dedicated circuit board which enables to contain the power consumption to 0.35W in case of the high flow rate version and to 0.1W in case of the standard flow rate version.

Functional schematics for standard version

1 = SUPPLY PORT
2 = OUTLET PORT
3 = EXHAUST PORT

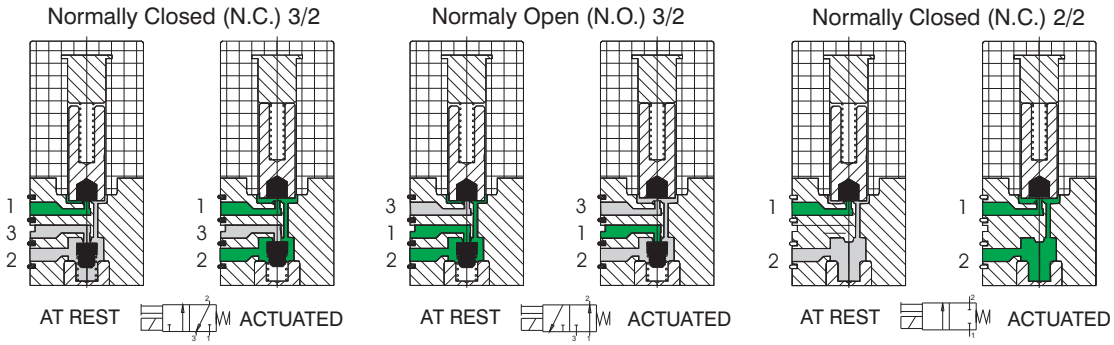

Functional schematics for Speed-up version

1 = SUPPLY PORT
2 = OUTLET PORT
3 = EXHAUST PORT

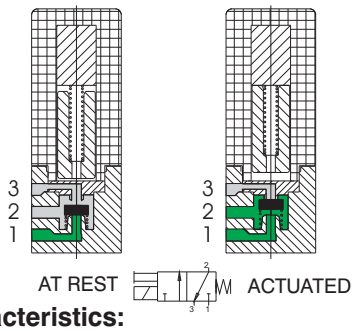

Normally Closed (N.C.) 3/2

Construction characteristics:

Electrical part:
Miniature solenoid consisting of a coil made of copper wire of different diameters depending on voltage,isolated according to "F" class standard, with injection-moulded nylon-glass application. All parts forming the cladding, the electrical connections and the pole pieces are protected against corrosion.

Mechanical part:
Stainless steel 430F armatures FPM poppets body in thermoplastic material and manual override and plug in nickel plated brass. Valves must be mounted on single or multiple manifold to be used.

Technical characteristics

		Standard Version	Speed-Up Version
Pneumatic:	Working pressure	0 - 7 bar	
	Nominal diameter	0,7 mm	1,1 mm
	Temperature	-5° - +50°C	
	Maximun flow rate at 6 bar with Δp 1 bar	14 Nl/min	24 Nl/min
	Exhaust flow	22 Nl/min	29 Nl/min
	Max number of cycles per minute	2.700	
	Life	50 million	
Electric:	Voltages	12 - 24 Volt D.C.	
	Power	1,3 Watt	0,35 Watt (1)
	Voltage tollerance	-5% - +10%	
	Response time when energized *	8 ms	
	Response time when de-energized *	10 ms	
	Copper wire isolation class	F (155°C)	
	Protection degree	IP65 (with cables) IP40 (with connectors) IP00 (with Faston)	

(*) "Shifting time of pneumatic directional control valves or moving parts, logic devices were measured in accordance to ISO 12238:2001, Pneumatic fluid power - Directional control valves - Measurement of shifting time"

(1) = consumption wrapping in opening phase 3, 5W (10 ms), consumption wrapping in maintenance phase 0.35 W.

10 mm Standard miniature solenoid ordering codes

N3 _ _ . _

- **6** = 2/2 N.C.
- **7** = 3/2 N.C.
- **8** = 3/2 N.O.

- **1** = 24 V D.C.
- **2** = 12 V D.C.
- **4** = 6 V D.C.*

- **1** = 90° Connector with Led
- **2** = Cable 300 mm. - IP65 (embedded cable)*
- **3** = Line Connector with Led
- **4** = 90° Connector without Led
- **5** = Line Connector without Led

* = The c UL us Directive does not apply to these versions

2

Miniature solenoid valve with cable

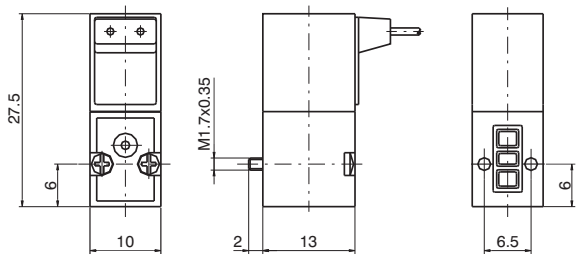

Weight 12 gr.

Miniature solenoid valve with 90° connector

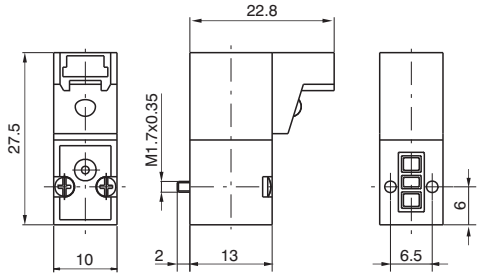

Weight 12 gr.

Miniature solenoid valve with line connector

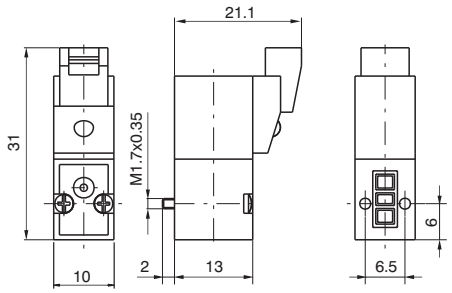

Weight 12 gr.

Connector

Ordering codes

371 . _

- **300 :** Cable L = 300 mm
- **600 :** Cable L = 600 mm
- **1000 :** Cable L = 1000 mm

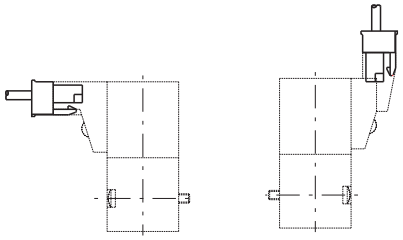

Weight 3 gr.

Closing plate

Ordering codes

395.00

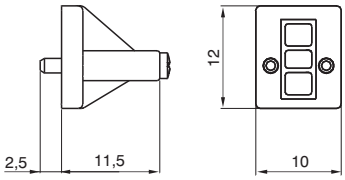

Weight 5 gr.

Interfaces dimensions

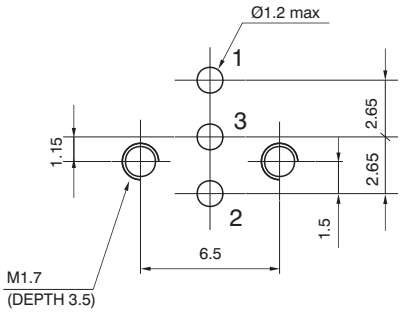

10 mm - ISO 15218-2003 miniature solenoid ordering codes

The versions are not contemplated by the c UL us Directive

P3 _ _ . _

- **6** = 2/2 N.C.
- **7** = 3/2 N.C.

- **1** = 24 V D.C.
- **2** = 12 V D.C.
- **4** = 6 V D.C.
- **7** = 24 V D.C. (SPEED-UP)*

- **1** = 90° Connector with Led
- **2** = Cable 300 mm. - IP65 (embedded cable)
- **3** = Line Connector with Led
- **4** = 90° Connector without Led
- **5** = Line Connector without Led

* = Available only in the version with inline connector or 90º

Miniature solenoid valve with cable

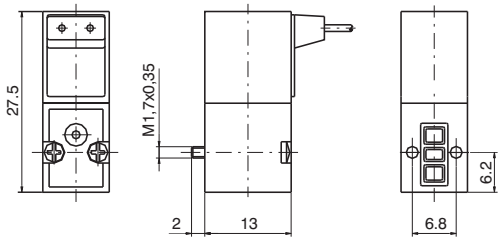

Weight 12 gr.

Miniature solenoid valve with 90° connector

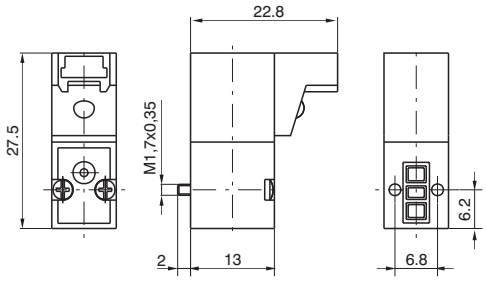

Weight 12 gr.

Miniature solenoid valve with line connector

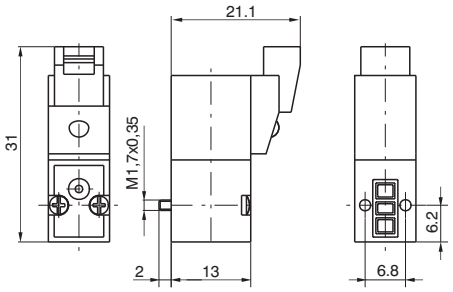

Weight 12 gr.

Connector

Ordering codes

371 . _

- **300 :** Cable L = 300 mm
- **600 :** Cable L = 600 mm
- **1000 :** Cable L = 1000 mm

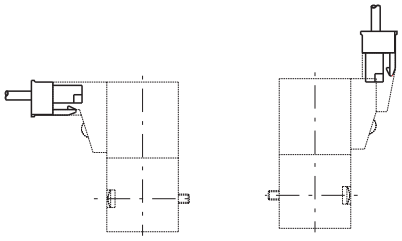

Weight 3 gr.

Interfaces dimensions 10 mm - ISO 15218

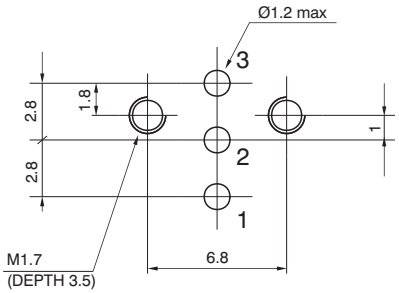

10 mm - ISO SPEED-UP miniature solenoid ordering codes

(The versions are not contemplated by the c UL us Directive)

P377.4 __ . __

- **0** = Reverse version
- **1** = Standard version

- **D** = Right pins
- **C** = Centerd pins
- **S** = Left pins

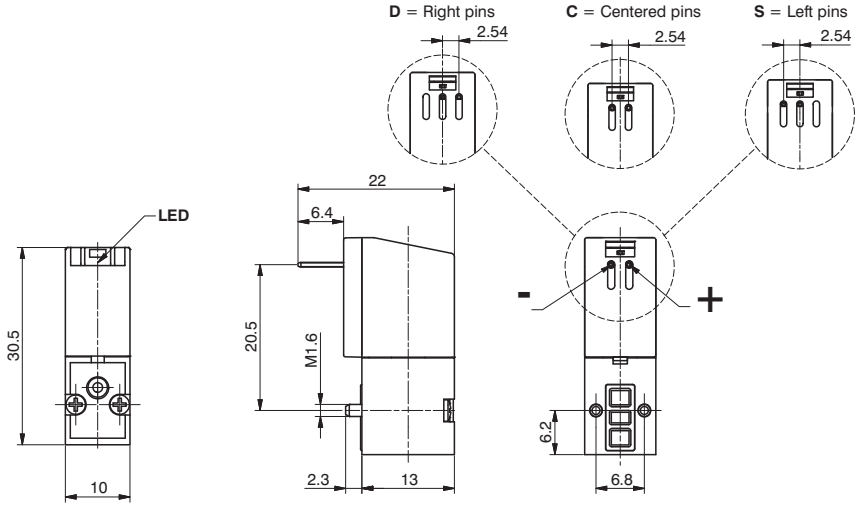

Weight 14 gr.

Technical characteristics

Working pressure	0 - 7 bar
Nominal diameter	1,1 mm
Temperature	-5° - +50°C
Maximun flow rate at 6 bar with Δp 1 bar	24 Nl/min
Exhaust flow	40 Nl/min
Voltages	24 Volt D.C. -5% - +10%
Power	0,35 Watt (1)
Response time when energized *	4 ms
Response time when de-energized *	5 ms

(*) "Shifting time of pneumatic directional control valves or moving parts, logic devices were measured in accordance to ISO 12238:2001, Pneumatic fluid power - Directional control valves - Measurement of shifting time"

(1) = consumption wrapping in opening phase 3, 5W (10 ms), consumption wrapping in maintenance phase 0.35 W.

Standard version Individual base

Ordering code

395.01

Weight 10 gr.

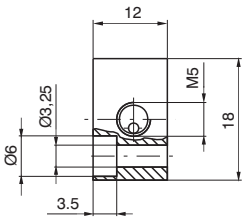

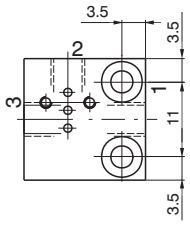

Standard version multiple bases

Ordering code

395 . __

N° Places

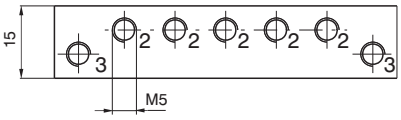

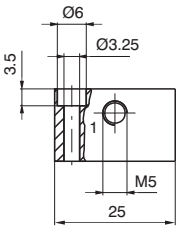

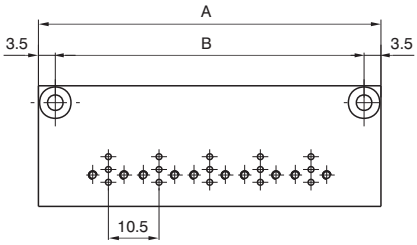

N° Places	02	03	04	05	06	07	08	09	10
A	39.5	50	60.5	71	81.5	92	102.5	113	123.5
B	32.5	43	53.5	64	74.5	85	95.5	106	116.5
Weight (gr.)	43	54	65	76	87	98	109	120	131

Individual base for ISO 15218-2003 version

Ordering code

P395.01

Weight 10 gr.

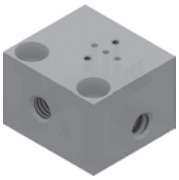

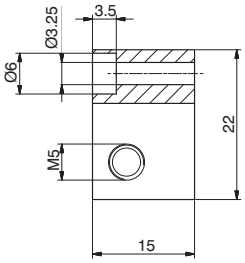

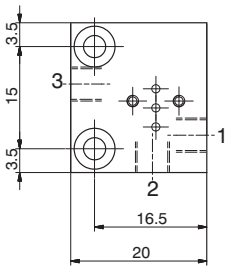

Multiple base for ISO 15218-2003 version

Ordering code

P395 . __

N° Places

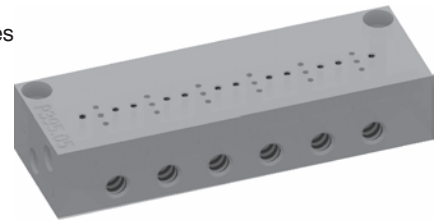

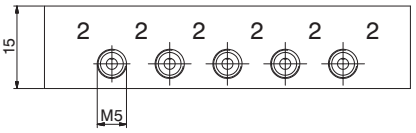

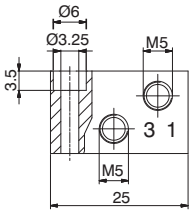

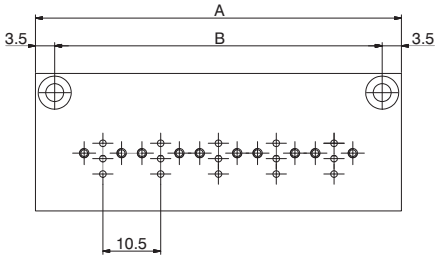

N° Places	02	03	04	05	06	07	08	09	10
A	35	45.5	56	66.5	77	87.5	98	108.5	119
B	28	38.5	49	59.5	70	80.5	91	101.5	112
Weight (gr.)	43	54	65	76	87	98	109	120	131

General

This direct operated solenoid valve has minimum overall dimensions (15 mm wide). Its construction method is same as 10 mm valve, of course.
It is suitable to be single or gang mounted or as electro-operator for larger air flow distributors.
Can be utilized with compressed air and other fluids compatible with material used to build the solenoid valve.
The available versions, all equipped with manual overide, are 3 ways, normally closed and normally open with DC and AC 50/60 Hz.
It's possible to install the N.O. valve on N.C. interface by using the registered reverse system included in the valve body.
The electrical connection is made with cables (300 mm.), FASTON or with connector.
This type of miniature solenoid valve is interchangeable with most of the same products available on the market.
Coil be can also positioned at 180° to get the electrical connection located on the opposite side than override.
Make sure that the fastening screews are tightened with maximum torque of 0,75 Nm.

Functional schematics

1 = SUPPLY PORT
2 = OUTLET PORT
3 = EXHAUST PORT

Normally Closed (N.C.) 3/2

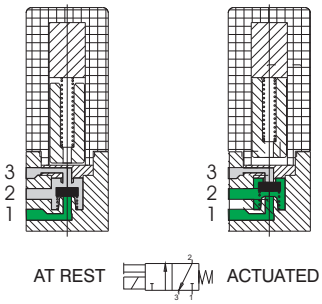

Normaly Open (N.O.) 3/2

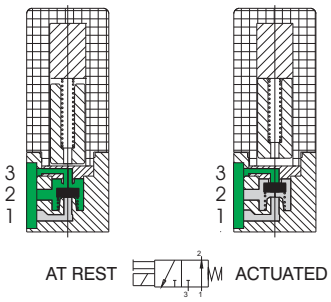

Construction characteristics

Electrical part
Miniature solenoid consisting of a coil made of copper wire of different diameters depending on voltage,isolated according to "F" class standard, with injection-moulded nylon-glass application. All parts forming the cladding, the electrical connections and the pole pieces are protected against corrosion.
Mechanical part
AISI 430F cores, AISI 302 return springs, FPM poppets, thermoplastic polyester body.

Technical characteristics

Pneumatics

Nominal diameter	0.8	1,1 mm	1,5 mm (only D.C.)
Maximun flow rate at 6 bar with Δp 1 bar	20 Nl/min	30 Nl/min	50 Nl/min
Working pressure for N.C.	0 - 10 bar		0 - 7 bar
Working pressure for N.O.	/	0 - 8 bar	0 - 5 bar
Temperature	-5° +50°C		
Life expectancy	50 million cycles (with standard working conditions)		

Electrical

Voltage D.C.	24 V DC	12-24 V DC	
Voltage A.C.	/	24-110-230 Volt 50/60 Hz	/
Power consumption D.C.	1 Watt	2,3 Watt	
Power consumption A.C.	/	2,8 VA (at starting) 2,5 VA (at speed)	/
Voltage tollerance	-5% - +10%		
Response time *	10-12 ms		
Isolating class	F (155°C)		
Protection degree	IP65 (with cables) IP40 (with connectors) IP00 (with faston)		

(*) "Shifting time of pneumatic directional control valves or moving parts, logic devices were measured in accordance to ISO 12238:2001, Pneumatic fluid power - Directional control valves - Measurement of shifting time"

15 mm miniature solenoid ordering codes

N3 _ _ . _ _ _ _

- **3** = 3/2 N.C.
- **4** = 3/2 N.O.
- **1** = 24 V DC
- **2** = 12 V DC
- **5** = 24 V 50-60 Hz
- **6** = 110 V 50-60 Hz
- **7** = 230 V 50-60 Hz
- **8** = 24V D.C. 1 W** (0,8 orifice only)
- **9** = Faston ground
- = Straight (no addittional letter required)
- **R** = Downward
- **0** = Faston
- **1** = Faston EN17301-803 (Ex DIN 43650)
- **2** = Cables* (300 mm)**
- **A** = Orifice Ø 1,1
- **B** = Orifice Ø 1,5
- **E** = Orifice Ø 0,8
- = PUSH (Standard Version)
- **2** = Without Manual override
- **8** = Manual override 2 positions

** = The c UL us Directive does not apply to these versions

See previous page for available versions

* = On request and for large quantity only *(only 24 V D.C., 2.3 W)*

With Faston

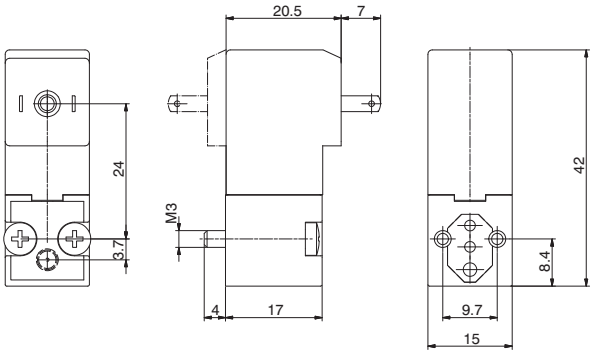

Weight 36 gr.

With Faston EN17301-803 (Ex DIN 43650

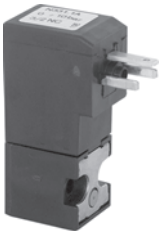

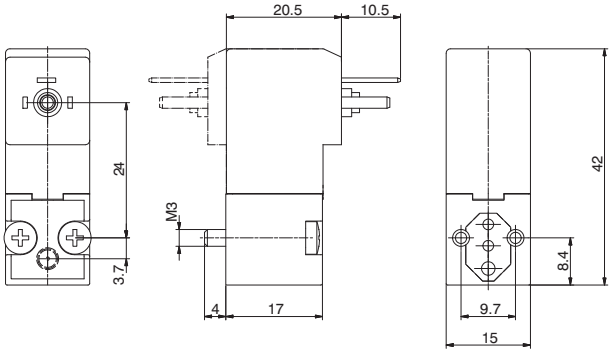

Weight 36 gr.

With Cables (300 mm)

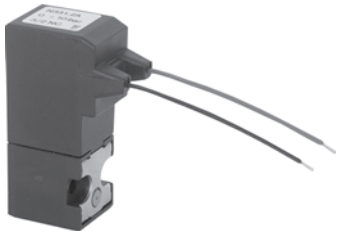

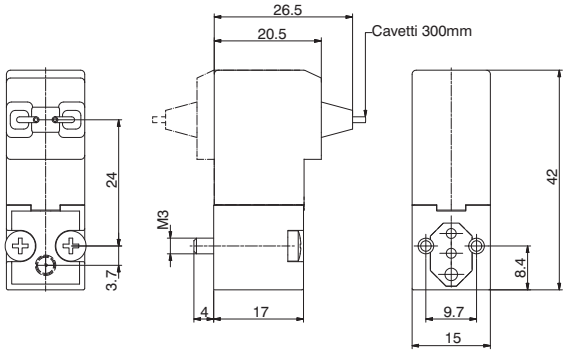

Weight 38 gr.

With Faston ground

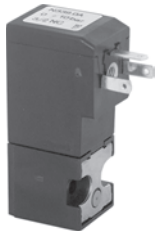

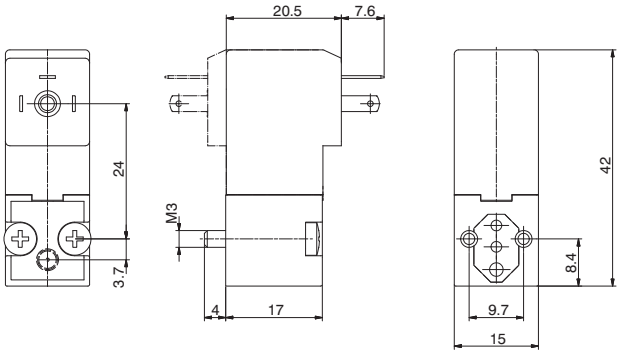

Weight 38 gr.

Connector

Ordering code

315.11.00 Standard
315.12.00 for faston EN17301-803 (Ex DIN 43650)
315.11.0_L Led
- 1 = 24 V D.C. / A.C.
- 2 = 110 V 50/60 Hz
- 3 = 230 V 50/60 Hz

315.12.0_L for faston EN17301-803 (Ex DIN 43650) with Led
- 1 = 24 V D.C. / A.C.
- 2 = 110 V 50/60 Hz
- 3 = 230 V 50/60 Hz

Weight 13 gr.

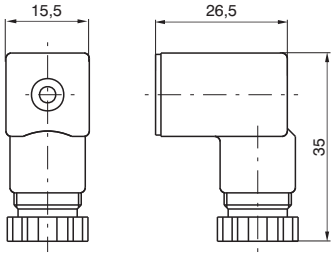

2

Single use base

Ordering code

355.01

Weight 18 gr.

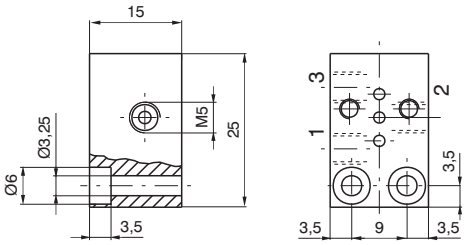

Multiple bases

Ordering code

A = Orifice M5 — **355 .** N° PLACES

A = Pipe fitting Ø4 — **354 .** N° PLACES

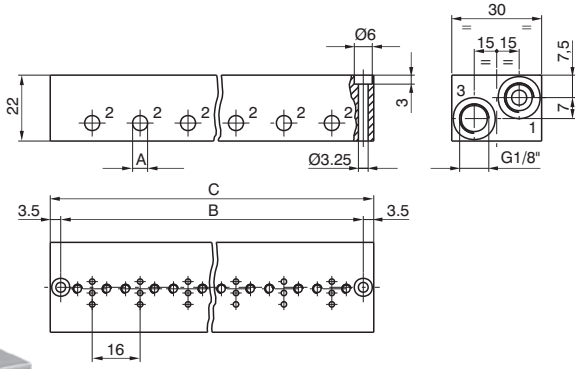

N° places	02	03	04	05	06	07	08	09	10
B	37	53	69	85	101	117	133	149	165
C	44	60	76	92	108	124	140	156	172
Weight (gr.)	66	92	116	141	165	190	216	242	266

Closing plate

Ordering code

355.00

Weight 6 gr.

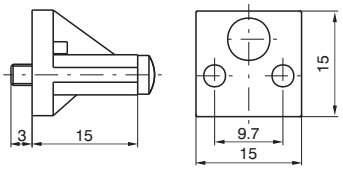

Interface dimensions

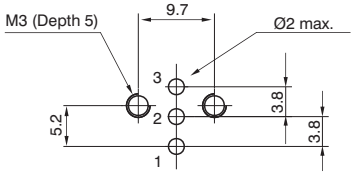

15mm Solenoid valves Manifold with electric multipoint connection

General

Also for this 15mm solenoid valves series we have realized the possibility of the assembling on the base with multipoint connection, this for making faster the connection and the harness of them.
Realized from a shaped outline, it results compact because it uses a relevant multipoint connection available only with a 37 poles connector from 10 to 32 solenoid valves (with steps of 2), available in line or at 90° and IP40 protection. On the base it is possible to put some threaded cartridges with push-in fittings for Ø3 – Ø3,17 Ø4 tube or M5 threaded.
The application field of these new configurations is the standard of 3/2 valves, where it is needed to realize groups or Manifolds provided with integrated electric connection to make easier and faster the connection and the harness of them (control of single acting cylinders with small dimensions, pilot system of valves with bigger dimensions etc..).

Constructive characteristics:

Constructive principle:
From 10 up to 32 solenoid valves (with steps of 2)
Extremely compact solution
IP40 protection (without visualisation led)
Possibility of having different working connections (Ø3, Ø3,17, Ø4 tubes, M5)
The new coding key requires the use of the same type of solenoid valves (there aren't codes for groups with a mixed configuration).

Overall dimensions

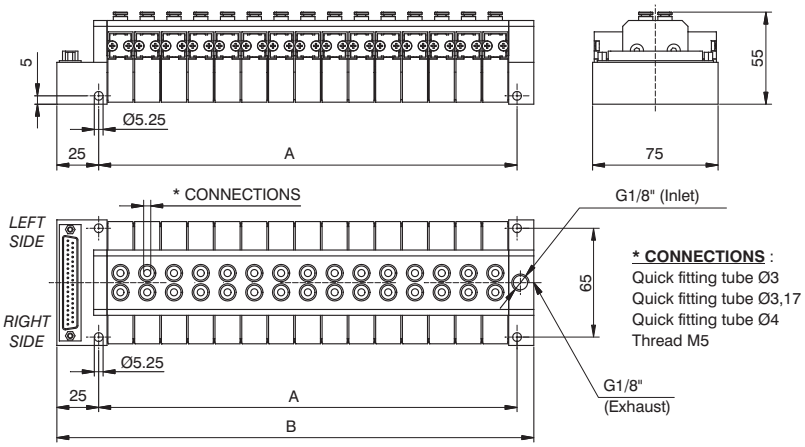

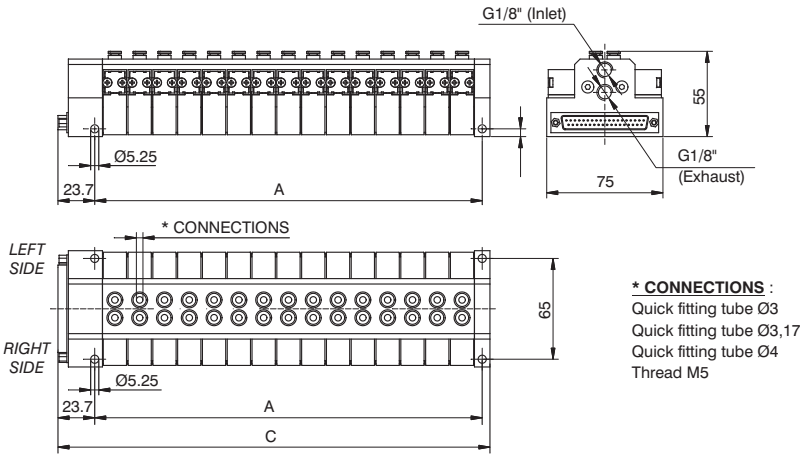

N° places	A	B	C
10	90	125	118,7
12	106	141	134,7
14	122	157	150,7
16	138	173	166,7
18	154	189	182,7
20	170	205	198,7
22	186	221	214,7
24	202	237	230,7
26	218	253	246,7
28	234	269	262,7
30	250	285	278,7
32	266	301	294.7

SUB-D 37 POLES CONNECTORS

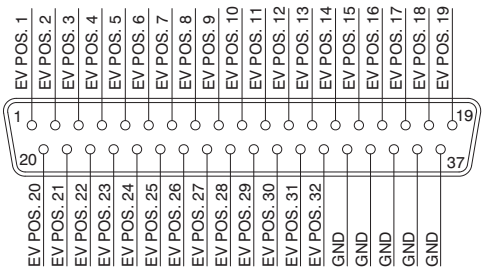

Overall dimensions
Manifold with CANopen® node

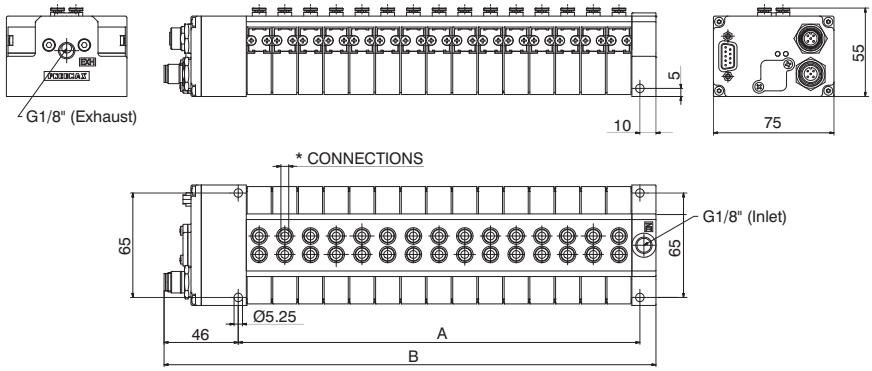

N° positions	A	B
10	90	146
12	106	162
14	122	178
16	138	194
18	154	210
20	170	226
22	186	242
24	202	258
26	218	274
28	234	290
30	250	306
32	266	322

Manifold layout configuration

Connector type
0 = in line connector
9 = 90° connector
C = with CANopen® node

Connections size and type
3 = quick fitting tube Ø3
C = quick fitting tube Ø3.17
4 = quick fitting tube Ø4
A = M5 thread

35M . NW . _ _ . 0 _ . _ _ _

N° positions
A = 10 positions
B = 12 positions
C = 14 positions
D = 16 positions
E = 18 positions
F = 20 positions
G = 22 positions
H = 24 positions
L = 26 positions
M = 28 positions
N = 30 positions
P = 32 positions

N° positions plugged side left
0 = 00 positions
1 = 01 positions
2 = 02 positions
3 = 03 positions
4 = 04 positions
5 = 05 positions
6 = 06 positions
7 = 07 positions
8 = 08 positions
9 = 09 positions
A = 10 positions
B = 11 positions
C = 12 positions
D = 13 positions
E = 14 positions
F = 15 positions
G = 16 positions

N° positions plugged side right
0 = 00 positions
1 = 01 positions
2 = 02 positions
3 = 03 positions
4 = 04 positions
5 = 05 positions
6 = 06 positions
7 = 07 positions
8 = 08 positions
9 = 09 positions
A = 10 positions
B = 11 positions
C = 12 positions
D = 13 positions
E = 14 positions
F = 15 positions
G = 16 positions

Valve type
A = N331.R0A (EV. 3/2 NC 24VDC d.1,1)
B = N331.R0B (EV. 3/2 NC 24VDC d.1,5)
C = N338.R0E (EV. 3/2 NC 24VDC 1W d.0,8)
D = N341.R0A (EV. 3/2 NO 24VDC d.1,1)
E = N341.R0B (EV. 3/2 NO 24VDC d.1,5)
F = N335.R0A (EV. 3/2 NC 24VAC d.1,1)

NOTE:
The "R" letter indicates that the coil is mounted upside-down (faces down). For prices and technical features of these valves please refer to the correspondent standard version (not R) included in the price list and catalogue.

Overall dimensions
Manifold with Optyma-F serial system (slave + input modules)

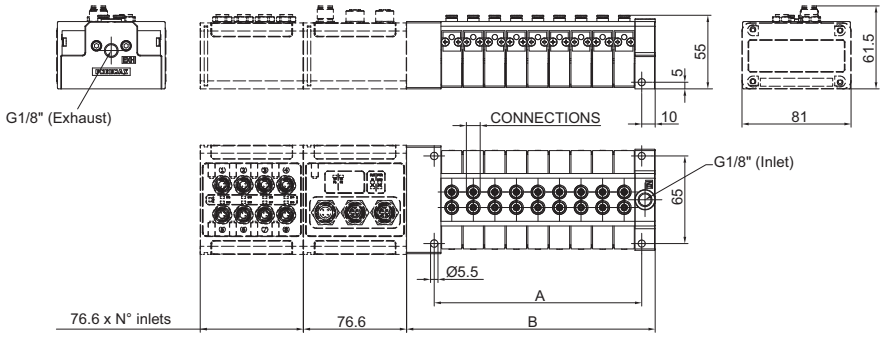

N° positions	A	B
10	90	120,50
12	106	136,50
14	122	152,50
16	138	168,50
18	154	184,50
20	170	200,50
22	186	216,50
24	202	232,50
26	218	248,50
28	234	264,50
30	250	280,50
32	266	296,50

Manifold layout configuration with Optyma-F serial system (slave + input modules)

32 OUT VERSION
C3=CANopen® 32OUT
D3=DeviceNet 32OUT
P3=PROFIBUS 32OUT
A3=EtherCAT® 32OUT (Serie 5700)
I3=EtherNet / IP 32OUT
N3=PROFINET IO RT/IRT 32OUT
L3= Powerlink 32OUT

INPUT MODULES
A = No module
D1= 8 M8 digital inputs modules
D3= 16IN digital inputs (SUB-D 25P) module
T1= 2 analogue inputs 0-5V module
T2= 2 analogue inputs 0-10V module
C1= 2 analogue inputs 0-20mA module
C2= 2 analogue inputs 4-20mA module

Connections size and type
3 = quick fitting tube Ø3
C = quick fitting tube Ø3.17
4 = quick fitting tube Ø4
A = M5 thread

35S . _ _ . _ _ . 0 _ . _ _

N° positions
A = 10 positions
B = 12 positions
C = 14 positions
D = 16 positions
E = 18 positions
F = 20 positions
G = 22 positions
H = 24 positions
L = 26 positions
M = 28 positions
N = 30 positions
P = 32 positions

N° positions plugged side left
0 = 00 positions
1 = 01 positions
2 = 02 positions
3 = 03 positions
4 = 04 positions
5 = 05 positions
6 = 06 positions
7 = 07 positions
8 = 08 positions
9 = 09 positions
A = 10 positions
B = 11 positions
C = 12 positions
D = 13 positions
E = 14 positions
F = 15 positions
G = 16 positions

N° positions plugged side right
0 = 00 positions
1 = 01 positions
2 = 02 positions
3 = 03 positions
4 = 04 positions
5 = 05 positions
6 = 06 positions
7 = 07 positions
8 = 08 positions
9 = 09 positions
A = 10 positions
B = 11 positions
C = 12 positions
D = 13 positions
E = 14 positions
F = 15 positions
G = 16 positions

Valve type
A = N331.R0A (EV. 3/2 NC 24VDC d.1,1)
B = N331.R0B (EV. 3/2 NC 24VDC d.1,5)
C = N338.R0E (EV. 3/2 NC 24VDC 1W d.0,8)
D = N341.R0A (EV. 3/2 NO 24VDC d.1,1)
E = N341.R0B (EV. 3/2 NO 24VDC d.1,5)
G = N321.R0A (EV.2/2 NC 24VDC d.1,1)
H = N321.R0B (EV.2/2 NC 24VDC d.1,5)

NOTE:
The "R"letter indicates that the coil is mounted upside-down (faces down). For prices and technical features of these valves please refer to the correspondent standard version (not R) included in the price list and catalogue.

Functional schematics

Normally Closed (N.C.) 3/2 or 2/2

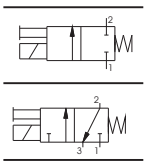

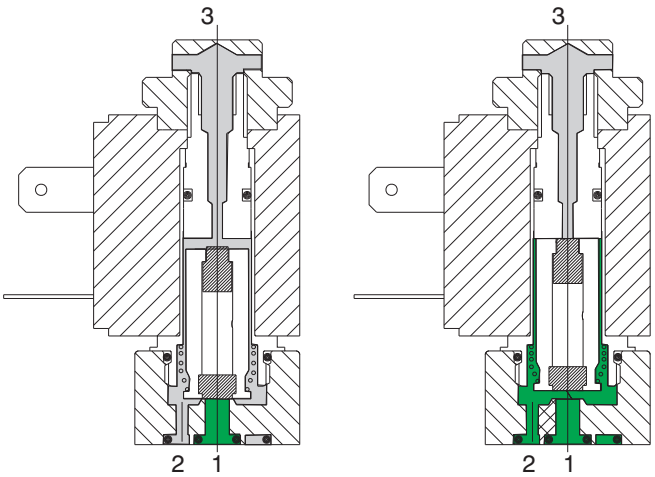

AT REST ACTUATED

1 = INLET PORT
2 = OUTLET PORT
3 = EXHAUST PORT
(Plugged if 2/2)

Normally Open (N.O.) 3/2 or 2/2

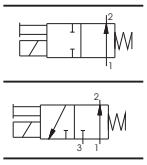

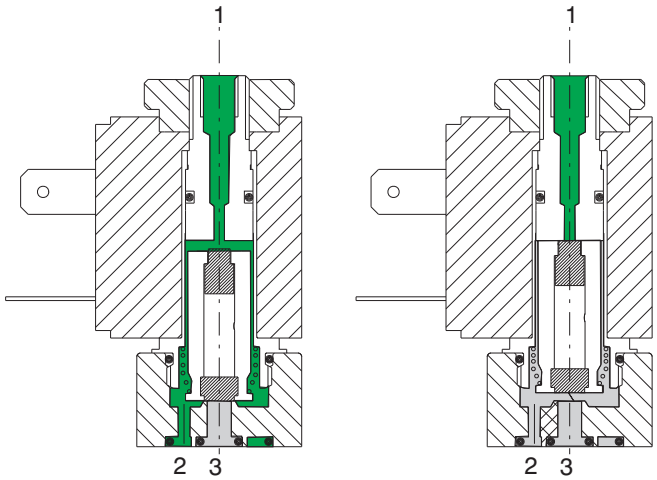

AT REST ACTUATED

Construction characteristics

Electrical parts: Solenoids: the solenoid consist of coils having different diameter copper wire windings insulated according standards "H"; they are encased in a nylon-glass compound. All parts are corrosion resistant.

Mechanical parts: Nickel plated brass tube nitrile viton seals stainless steel plunger (AISI 430F), stainless steel adjusted springs, viton poppet seals, tropicalized zinc alloy interface plate, nickeled brass manual override, nickel steel coil lock nut, zinc steel mounting screw. To be usable, the solenoids and microsolenoids have to be attached either to a base or directly to the distributor's operators by means of connectors M5 or G 1/8". These solenoids are available in all voltages and frequences used in the world. The following are the technical characteristics of the solenoid.

Technical characteristics

Pneumatic	Working pressure	0 - 10 bar	
	Orifice size	1,3 mm	(0,9 mm for 2 W)
	Maximum fluid temperature	50°C	
	Maximum ambient temperature	50°C	
	Maximum flow rate at 6 bar with Δp 1 bar	53 Nl/min	(20Nl/min. for 2 W)
	Cycles/minute	700	
	Fluids	Air-vacuum-inert gases	
	Lubrication	non required	
	Life	45 to 50 million cycles	
Electrical	Power consumption holding - D.C	5 W	(2.5 W) low consumption
	Power consumption holding - A.C	9 VA	(6 VA) low consumption
	Operating voltage tolerance	±10%	
	Response time opening *	8 ms	
	Response time closing *	6 ms	
	Insulation of the copper wire	H	
	Insulation of the coil	F	
	Connector protection	IP 65	
	Cable protection	DIN 43650 INDUSTRIAL FORM	

(*) "Shifting time of pneumatic directional control valves or moving parts, logic devices were measured in accordance to ISO 12238:2001, Pneumatic fluid power - Directional control valves - Measurement of shifting time"

Maintenance and replacement parts

Maintenance practices for these valves are similar to those already detailed for other products- replacement of the plunger or poppet is not advisable since the new replacement would not provide the best fit with the rest of the already used valve. Special care should be taken that no dirt is accumulated between the working surface of fixed core and the plunger which would result in vibrations and overheating of the solenoid. In the case of microsolenoid it must be assured that the alternate current coil is not charged when the machanical part is not mounted to avoid destruction of the coil. The electrical connections have to be perfect, especially where low currents are used (12-24V). Oxidation of contacts between the connector and the coil can lead to intermittent malfunctions which are difficult to trace. Oxidation of contacts due to humidity or corrosive atmosphere are one of the most common causes of false alarms. Clean the contacts with appropriate spray.

Mechanical actuator for miniature solenoid valve

Ordering code	
M 2	Normally Closed (N.C.)
M 2P	Normally Closed (N.C.) treaded lock nut
M 2/9	Normally Closed (N.C.) 2 W 24 VDC

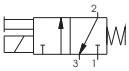

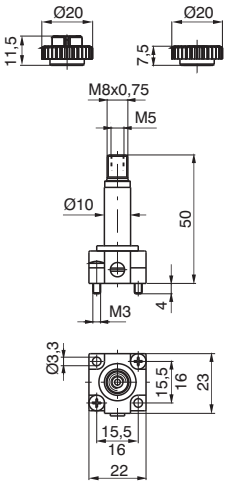

Weight 51 gr.

M 2/1 Normally Open (N.O.) air feeding through fix flunger

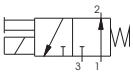

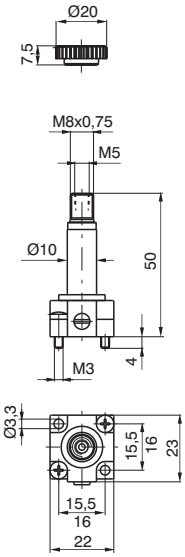

Weight 48 gr.

Normally Open (N.O.) air feeding through base

MM 7

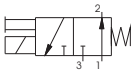

Weight 46 gr.

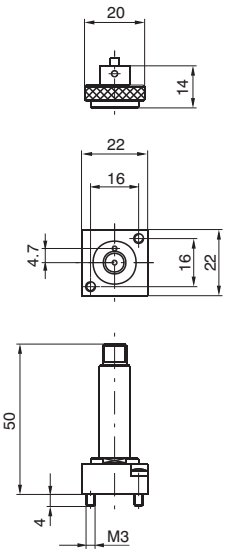

Ordering code N.O.	Available voltages Coil	
MB10/1	24 D.C. (8 Watt)	Direct current
MB17/1 **MB21/1** **MB22/1** **MB24/1**	24/50 48/50 110/50 230/50	Alternating current 50 Hz
MB37/1 **MB39/1** **MB41/1**	24/60 110/60 230/60	Alternating current 60 Hz
MB56/1 **MB57/1** **MB58/1**	24/50-60 110/50-60 230/50-60	Alternating current 50/60 Hz

Coil

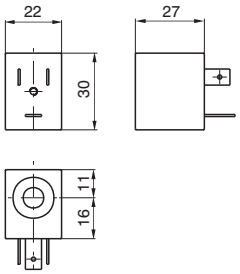

Weight 54 gr.

* Use only with M2/9

Ordering code	Available voltages Coils	
MB 4	12 D.C.	Direct current
MB 5	24 D.C.	
MB 6	48 D.C.	
MB 9*	24 D.C. (2 Watt) (Direct current, low consumption)	
MB 17	24/50	Alternating current 50 Hz
MB 21	48/50	
MB 22	110/50	
MB 24	230/50	
MB 37	24/60	Alternating current 60 Hz
MB 39	110/60	
MB 41	230/60	
MB 56	24/50-60	Alternating current 50/60 Hz
MB 57	110/50-60	
MB 58	230/50-60	
MB 66	24/50-60	Alternating current (low consumption) 50/60 Hz
MB 67	110/50-60	
MB 68	230/50-60	

Miniature solenoid valve Normally Closed (N.C.)

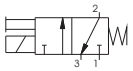

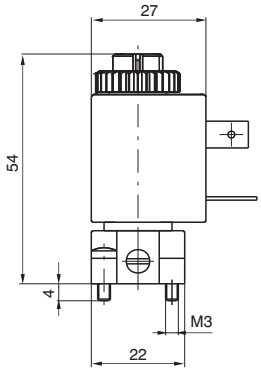

Weight 100 gr.

Ordering code	Available voltages Miniature solenoid valve N.C.	
M 2.4	12 D.C.	Direct current
M 2.5	24 D.C.	
M 2.6	48 D.C.	
M 2.9	24 D.C. (2 Watt)	
M 2.17	24/50	Alternating current 50 Hz
M 2.21	48/50	
M 2.22	110/50	
M 2.24	230/50	
M 2.37	24/60	Alternating current 60 Hz
M 2.39	110/60	
M 2.41	230/60	
M 2.56	24/50-60	Alternating current 50/60 Hz
M 2.57	110/50-60	
M 2.58	230/50-60	
M 2.66	24/50-60	Alternating current (low consumption) 50/60 Hz
M 2.67	110/50-60	
M 2.68	230/50-60	

Miniature solenoid valve Normally Open (N.O.)

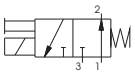

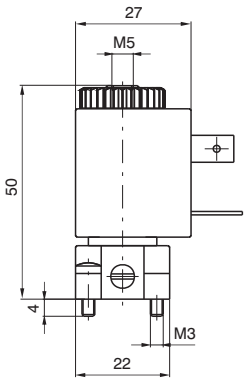

Weight 103 gr.

Ordering code	Available voltages Miniature solenoid valve N.O.	
M 2/1.4	12 D.C.	Direct current
M 2/1.5	24 D.C.	
M 2/1.6	48 D.C.	
M 2/1.9	24 D.C. (2 Watt)	
M 2/1.17	24/50	Alternating current 50 Hz
M 2/1.21	48/50	
M 2/1.22	110/50	
M 2/1.24	230/50	
M 2/1.37	24/60	Alternating current 60 Hz
M 2/1.39	110/60	
M 2/1.41	230/60	
M 2/1.56	24/50-60	Alternating current 50/60 Hz
M 2/1.57	110/50-60	
M 2/1.58	230/50-60	

External feeding base

Use with solenoid valves for piloting pressure different from the using pressure

Ordering code
305.10.05

Weight 18 gr.

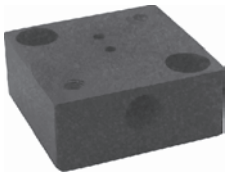

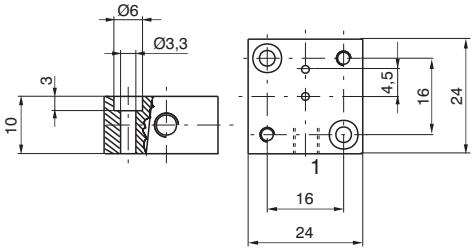

2

Individual base

In line ports - thread M5

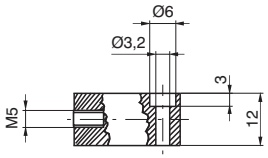

1 = INLET PORT (N.C.)
2 = OUTLET PORT

With a N.O. miniature solenoid valve
1 = EXHAUST
2 = OUTLET PORT

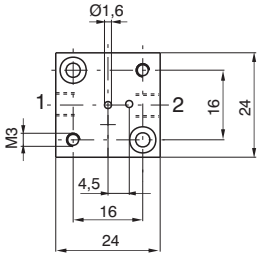

Ordering code

305.00.00

Weight 56 gr.

90° Port - thread M5

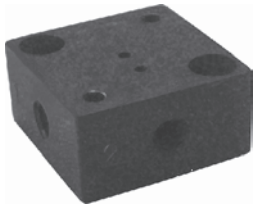

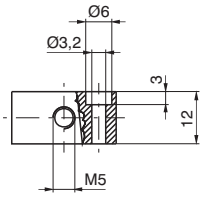

1 = INLET PORT (N.C.)
2 = OUTLET PORT (N.C)

With a N.O, miniature solenoid valve
1 = EXHAUST
2 = OUTLET PORT

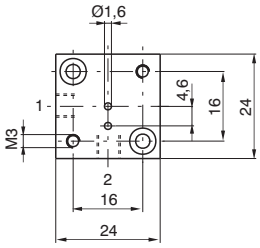

Ordering code

305.90.00

Weight 56 gr.

In line ports - thread G 1/8"

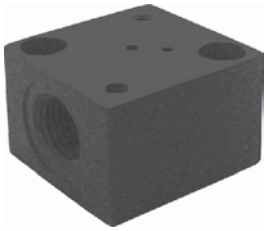

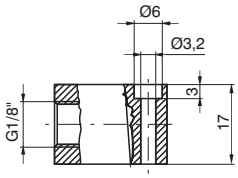

1 = INLET PORT (N.C.)
2 = OUTLET PORT (N.C)

With a N.O. miniature solenoid valve
1 = EXHAUST
2 = OUTLET PORT

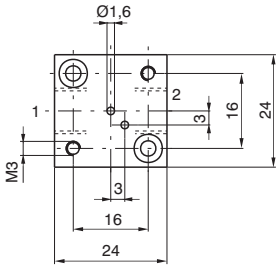

Ordering code

305.00.18

Weight 75 gr.

90° Port - thread G 1/8"

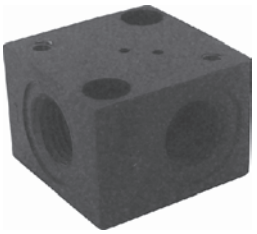

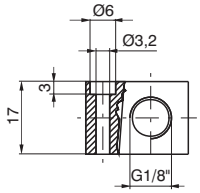

1 = INLET PORT (N.C.)
2 = OUTLET PORT (N.C.)

With a N.O. miniature solenoid valve
1 = EXHAUST
2 = OUTLET PORT

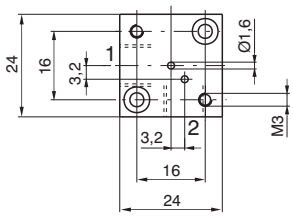

Ordering code

305.90.18

Weight 75 gr.

Modular bases for series mounting

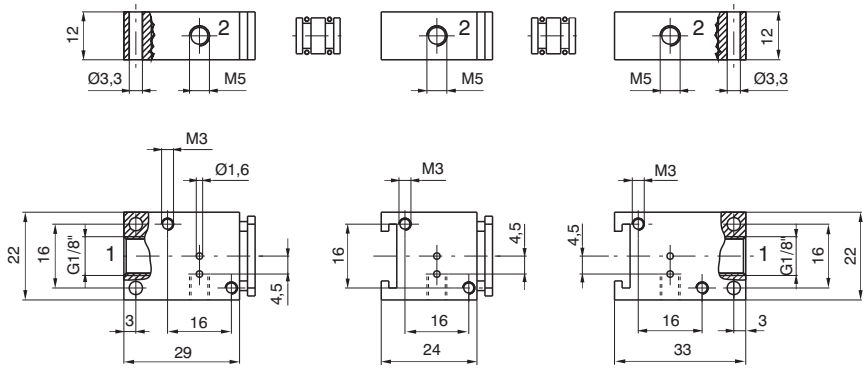

Initial base *Intermediate base* *Last base*

Ordering code

Initial base
305.05.00
Weight 57 gr.

Intermediate base
305.06.00
Weight 44 gr.

Last base
305.07.00
Weight 53 gr.

Bored spacer
305.05.01
Weight 3 gr.

Solid spacer
305.05.02
Weight 4 gr.

Multiple integral bases for series mounting

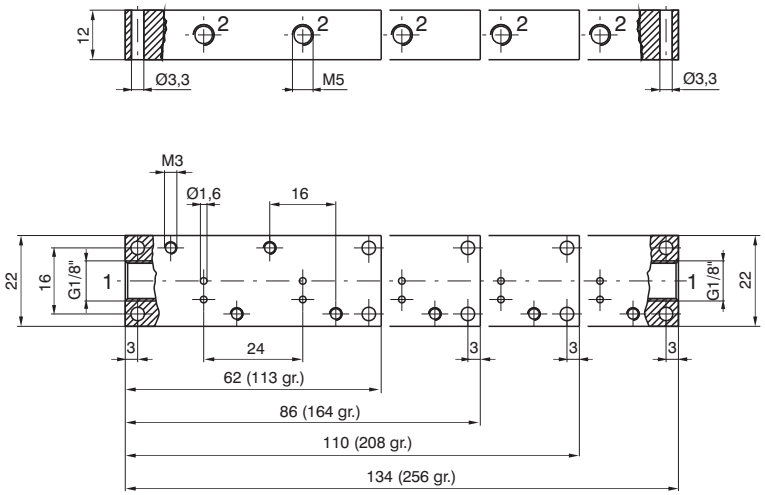

Ordering code

305.08.02 **2** positions
305.08.03 **3** positions
305.08.04 **4** positions
305.08.05 **5** positions

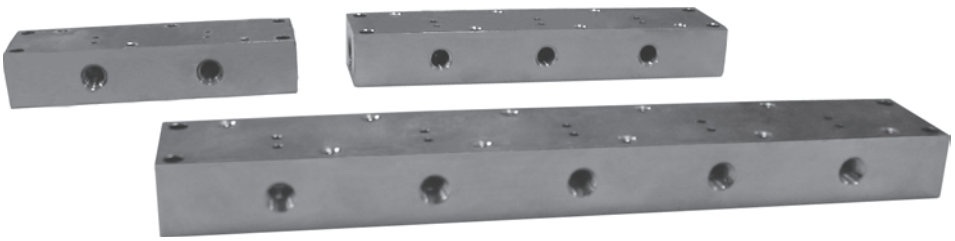

Functional schematic

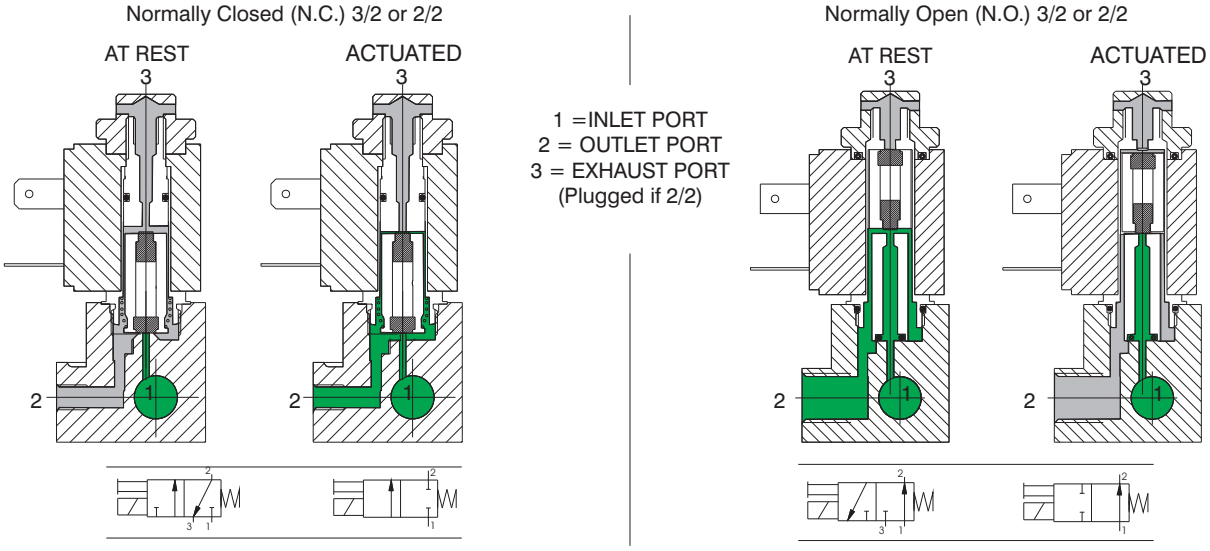

Construction characteristics

Electrical parts: Solenoids: the solenoid consist of coils having different diameter copper wire windings insulated according standards "H"; they are encased in a nylon-glass compount. All parts are corrosion resistant.

Mechanical parts: Nickel plated brass tube nitrile (NBR) stainless steel plunger (AISI 430F), stainless steel adjusted springs, viton poppet seals, tropicalized zinc alloy interface plate, nickeled brass manual override, nickel steel coil lock nut, zinc steel mounting screws. Electrical connectors are standard.

Technical characteristics

Pneumatic	Working pressure	0 - 10 bar	
	Orifice size	1,3 mm	(1,1 mm for 2 W)
	Maximum fluid temperature	50°C	
	Maximum ambient temperature	50°C	
	Maximum flow rate at 6 bar with ?p = 1	53 Nl/min	(35 Nl/min. for 2 W)
	Cycles/minute	700	
	Fluids	Air-Vacuum-Inert gases	
	Lubrication	Non needed	
	Life	40 to 50 million cycles	
Electrical	Power consumption holding - D.C	5 W	(2 W) low consumption
	Power consumption holding - A.C	8 VA	(6 VA) low consumption
	Operating voltage tolerance	±10%	
	Response time opening *	8 ms	
	Response time closing *	6 ms	
	Insulation of the copper wire	H	
	Insulation of the coil	F	
	Connector protection	IP 65	
	Cable protection	DIN 43650 INDUSTRIAL FORM	

(*) "Shifting time of pneumatic directional control valves or moving parts, logic devices were measured in accordance to ISO 12238:2001, Pneumatic fluid power - Directional control valves - Measurement of shifting time"

Maintenance and replacement parts

Maintenace practices for these valves are similar to those already detailed for other products - replacement of the plunger or poppet is not advisable since the new replacement would not provide the best fit with the rest of the already used valve.

Special care should be taken that no dirt is accumulated between the working surface of fixed core and the plunger which would result in vibrations and overheating of the solenoid. In the case of microsolenoid it must be assured that the alternate current coil is not charged when the machanical part is not mounted to avoid destruction of the coil.

The electrical connections have to be perfect, especially where low currents are used (12-24 V). Oxidation of contacts between the connector and the coil can lead to intermittent malfunctions which are difficult to trace. Oxidation of contacts due to humidity or corrosive atmosphere are one of the most common causes of false alarms. Clean the contacts with appropriate spray.

Mechanical actuator for Normally Closed (N.C.)
Miniature solenoid valve

Normally Closed (N.C.)

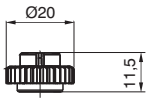

Ordering code

305.M1 **A** = G 1/8"
355.M1 **A** = M5
345.M1 **A** = Push in fitting for 4 mm tube

305.M1/9 **A** = G 1/8"
355.M1/9 **A** = M5
345.M1/9 **A** = Push in fitting for 4 mm tube

2 W
24 DC

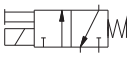

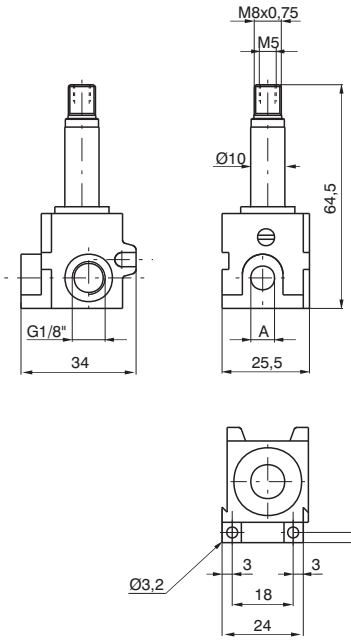

Weight 95 gr.

Normally Open (N.O.)

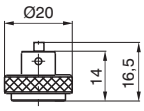

Ordering code

305.M1/1 **A** = G 1/8"
355.M1/1 **A** = M 5
345.M1/1 **A** = Push in fitting for 4 mm tube

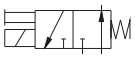

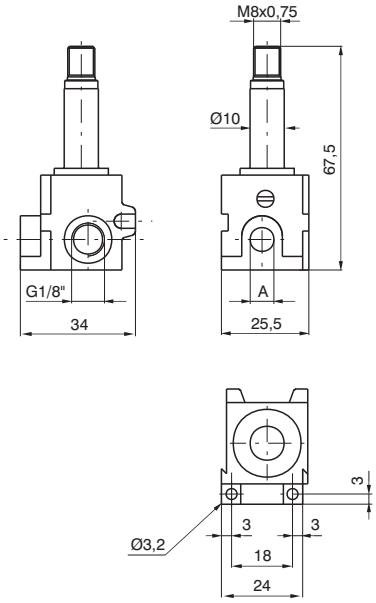

Weight 106 gr.

Miniature solenoid valve

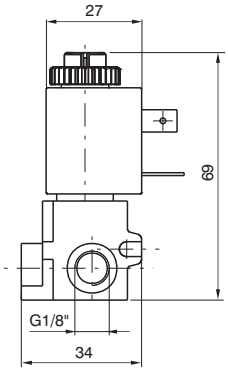

Normally Closed (N.C.)

Ordering code			Available voltage miniature solenoid	
G 1/8"	M5	TUBE Ø4 mm		
305.M4 **305.M5** **305.M6** **305.M9**	**355.M4** **355.M5** **355.M6** **355.M9**	**345.M4** **345.M5** **345.M6** **345.M9**	12 D.C. 24 D.C. 48 D.C. 24 D.C. (2 Watt)	Direct current
305.M17 **305.M21** **305.M22** **305.M24**	**355.M17** **355.M21** **355.M22** **355.M24**	**345.M17** **345.M21** **345.M22** **345.M24**	24/50 48/50 110/50 230/50	Alternating current 50 Hz
305.M37 **305.M39** **305.M41**	**355.M37** **355.M39** **355.M41**	**345.M37** **345.M39** **345.M41**	24/60 110/60 230/60	Alternating current 60 Hz
305.M56 **305.M57** **305 M58**	**355.M56** **355.M57** **355.M58**	**345.M56** **345 M57** **345 M58**	24/50-60 110/50-60 230/50-60	Alternating current 50/60 Hz
305.M66 **305.M67** **305 M68**	**355.M66** **355.M67** **355.M68**	**345.M66** **345 M67** **345 M68**	24/50-60 110/50-60 230/50-60	Alternating current low consumption 50/60 Hz

Weight 149 gr.

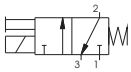

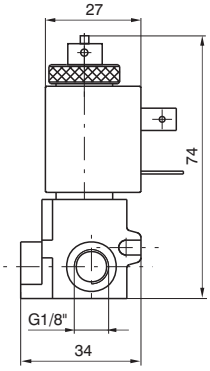

Normally Open (N.O.)

Ordering code			Available voltages miniature solenoid	
G 1/8"	M5	TUBE Ø4 mm		
305.M10/1	**355.M10/1**	**345.M10/1**	24 D.C. (8 Watt)	Direct current
305.M17/1 **305.M21/1** **305.M22/1** **305.M24/1**	**355.M17/1** **355.M21/1** **355.M22/1** **355.M24/1**	**345.M17/1** **345.M21/1** **345.M22/1** **345.M24/1**	24/50 48/50 110/50 230/50	Alternating current 50 Hz
305.M37/1 **305.M39/1** **305.M41/1**	**355.M37/1** **355.M39/1** **355.M41/1**	**345.M37/1** **345.M39/1** **345.M41/1**	24/60 110/60 230/60	Alternating current 60 Hz
305. M56/1 **305. M57/1** **305. M58/1**	**355.M56/1** **355.M57/1** **355.M58/1**	**345.M56/1** **345.M57/1** **345.M58/1**	24/50-60 110/50-60 230/50-60	Alternating current 50/60 Hz

Weight 165 gr.

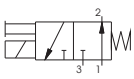

Coil

Weight 54 gr.

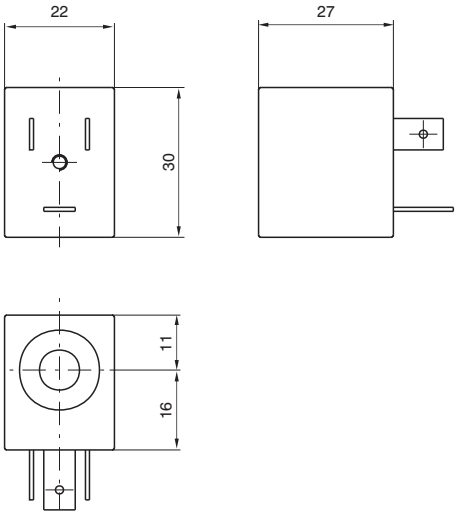

Ordering code		Available voltages Coil	
N.C.	N.O.		
MB4 **MB5** **MB6** **MB9**	 **MB10/1**	12 D.C. 24 D.C. 48 D.C. 24 D.C. (2 Watt) 24 D.C. (8 Watt)	Direct current
MB17 **MB21** **MB22** **MB24**	**MB17/1** **MB21/1** **MB22/1** **MB24/1**	24/50 48/50 110/50 230/50	Alternating current 50 Hz
MB37 **MB39** **MB41**	**MB37/1** **MB39/1** **MB41/1**	24/60 110/60 230/60	Alternating current 60 Hz
MB56 **MB57** **MB58**	**MB56/1** **MB57/1** **MB58/1**	24/50-60 110/50-60 230/50-60	Alternating current 50/60 Hz
MB66 **MB67** **MB68**	/	24/50-60 110/50-60 230/50-60	Alternating current (low consumption) 50/60 Hz

Electrical connector

Ordering code	
305.11.00	Normal
305.11.0_L	with Led 1 = 24 V D.C. / A.C. 2 = 110 V 50/60 Hz 3 = 230 V 50/60 Hz

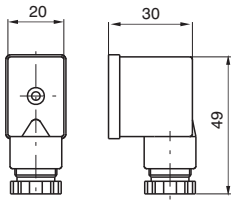

Weight 19 gr.

BISTABILE
General

The most interesting aspects of this bi-stable miniature solenoid valve operating with D.C. only, is that it can be commuted with a simple electric impulse and stay commuted till an inverted polarity impulse deactivates it. It means that the valve is not automatically deactivated if current fail as happens with normal solenoid valves.

The applications differ but are all based on above mentioned feature.

The internal construction is relatively special. The fix plunger is equipped with a permanent magnet that hold or release the mobile plunger according to the magnetic field generated by the coil.

A specific coil is used for this application and it cannot be replaced by the standard ones.

Ordering code is **MBB5**.

2

Miniature solenoid valve for distributors and bases

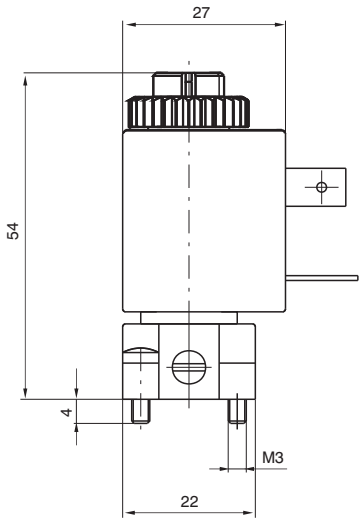

Ordering code

M5/B

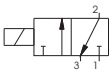

Miniature solenoid valve with inseries mounting base

Ordering code

305.M5/B = G 1/8"
355.M5/B = M5
345.M5/B = Fitting for 4 mm tube

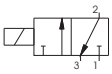

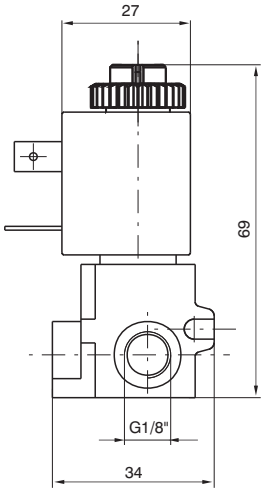

Electric pilot CNOMO (coil not included)

Mechanics with base for solenoid to be used where an electric pilot system is required.
May be used on all sizes and is standardized as an interface on the distributor.
The base is fitted with a manual control which is pulse actuated, without check, or with two stable positions, actuated by means of a screwdriver (pressing down and turning clockwise by 90°). Two different types of solenoids can be mounted on the stem, one in conformity with ISO standard size 30x38 and ISO 4400 (DIN 43650) electrical connection, and a compact one size 22x27, having the same performance but at lower price. The technical characteristics of the latter are described in the catalogue, series 300, and refer to MB solenoids. The base is fitted with screws (M4x30) for fastening to the distributor.

Ordering code

M | |

P = Manual 1 position
R = Manual 2 positions

3 = Mechanics CNOMO
4 = 2-W Mechanics CNOMO

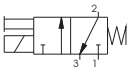

Weight 49 gr.

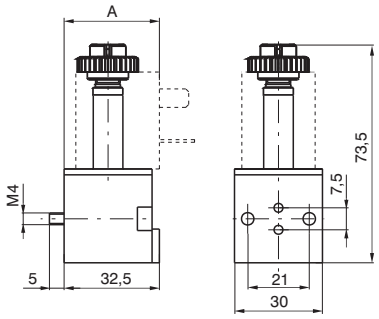

A = 33 (with MB solenoid)
A = 38 (with MC solenoid)

General characteristics

Structural	Body	Thermoplastic polyester	
	Stem	Nickel-platted brass	
	Cores	AISI 430F stainless steel	
	Springs	AISI 302 stainless steel	
	Shutters	FPM	
	Other seals	NBR	
	Manual control	Nickel-platted brass	
Pneumatic	Fluid	Air, Neutral gases	
	Working pressure	0-10 bar	
	Fluid ambient temperature	-5°C - +50°C	
	Flow rate at 6 bar with Δp 1 bar	53 Nl/min	(20 Nl/min for 2 W)
	Nominal flow cross section	1,3 mm	(0,9 mm for 2 W)
Electric	Power consumption (inrush) - A.C.	13 VA	
	Power consumption holding - D.C.	4 W	(2 W)
	Power consumption holding - A.C.	8,5 VA	
	Operating voltage tolerance	±10%	
	Response time opening *	13 ms	
	Response time closing *	5 ms	
	Insulation of the copper wire	H	
	Insulation of the coil	F	
	Connector protection	IP 65	
	Cable protection	DIN 43650 “A” FORM	

(*) "Shifting time of pneumatic directional control valves or moving parts, logic devices were measured in accordance to ISO 12238:2001, Pneumatic fluid power - Directional control valves - Measurement of shifting time"

Coil

Ordering code	Available voltages Coil
MC5	24 D.C.
MC9	24 D.C. (2 Watt)
MC56	24/50-60 Hz
MC57	110/50-60 Hz
MC58	230/50-60 Hz

Weight 110 gr.

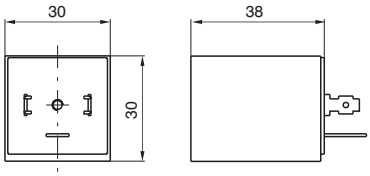

Functional schematic

Normally Closed (N.C.) 3/2 or 2/2

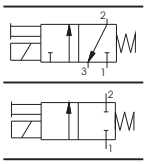

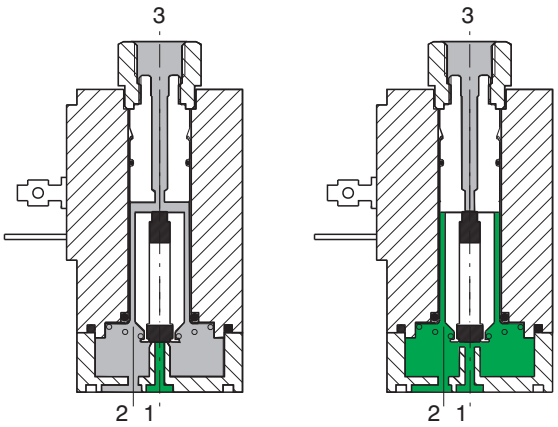

AT REST ACTUATED

1 = INLET PORT
2 = OUTLET PORT
3 = EXHAUST PORT
(Plugged if 2/2)

Normally Open (N.O.) 3/2 or 2/2

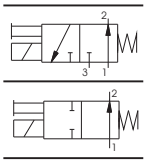

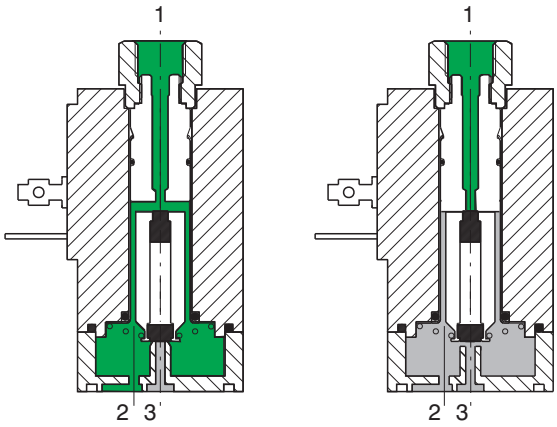

AT REST ACTUATED

Construction characteristics

Electrical parts:
Solenoids: the solenoid consists of coils having different diameter copper wire windings insulated according standards "H"; they are encased in a nylon-glass compound. All parts are corrosion resistant.

Mechanical parts:
Stainless steel tube and plunger (AISI 430F), stainless steel adjusted springs, viton poppet seals, tropicalized zinc alloy interface plate, nitrile (NBR) seal nickeled brass manual override, nickel steel coil lock nut, zinc steel mounting screws. To be usable, the solenoids have to be attached either to a base or directly to the distributor's operators by means of connectors G 1/8".Electrical connectors are standard. These solenoid are available in all voltages and frequences used in the world. The following are the technical characteristics of the solenoid.

Technical characteristics

Pneumatic	Working pressure	0 - 10 bar
	Orifice size	1,8 mm
	Maximum fluid temperature	50°C
	Maximum ambient temperature	50°C
	Maximum flow rate at 6 bar with Δp = 1	80 Nl/min
	Cycles/minute	700
	Fluids	Air-Vacuum-Inert gases
	Lubrication	Not required
	Life	40 to 50 millions
Electric	Power consumption (inrush) - D.C.	-
	Power consumption (inrush) - A.C.	19,5 VA
	Power consumption holding - D.C.	8,2 W
	Power consumption holding - A.C.	9 VA
	Operating voltage tolerance	±10%
	Response time opening *	15 ms
	Response time closing *	30 ms
	Insulation of the copper wire	H
	Insulation of the coil	F
	Connector protection	IP 65
	Cable protection	DIN 43650 “A” FORM

(*) "Shifting time of pneumatic directional control valves or moving parts, logic devices were measured in accordance to ISO 12238:2001, Pneumatic fluid power - Directional control valves - Measurement of shifting time"

Maintenance and replacement parts

Maintenance practices for these valves are similar to those already detailed for other products - replacement of the plunger or poppet is not advisable since the new replacement would not provide the best fit with the rest of the already used valve.

Special care should be taken that no dirt is accumulated between the working surface of fixed cores 3 and the plunger 2 which would result in vibrations and overheating of the solenoid. In the case of microsolenoid it must be assured that the alternate current coil is not charged when the mechanical part is not mounted to avoid destruction of the coil.

The electrical connections have to be perfect, especially where low currents are used (12-24 V). Oxidation of contacts between the connector and the coil can lead to intermittent malfunctions which are difficult to trace. Oxidation of contacts due to humidity or corrosive atmosphere are one of the most common causes of false alarms. Clean the contacts with appropriate spray.

2

Solenoid valve S and S/1

Weight 220 gr.

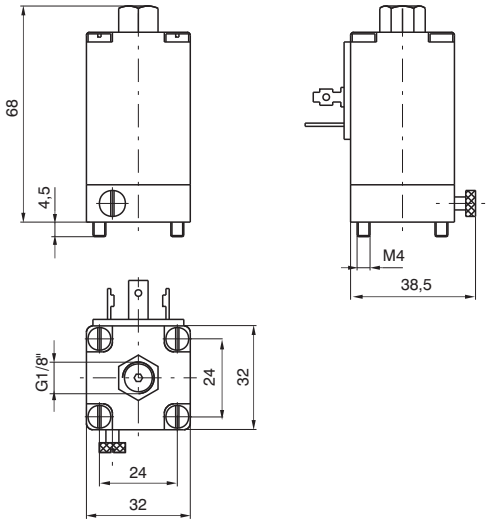

Normally Closed (N.C.) - **S**

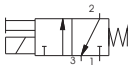

Normally Open (N.O.) - **S/1**

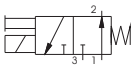

Ordering code		Available voltages Coil	
S 2 **S 4** **S 5** **S 6**	**S 2/1** **S 4/1** **S 5/1** **S 6/1**	6 D.C. 12 D.C. 24 D.C. 48 D.C.	Direct current
S 16 **S 17** **S 19** **S 20** **S 21** **S 22** **S 23** **S 24**	**S 16/1** **S 17/1** **S 19/1** **S 20/1** **S 21/1** **S 22/1** **S 23/1** **S 24/1**	12/50 24/50 32/50 42/50 48/50 110/50 115/50 230/50	Alternating current 50 Hz
S 36 **S 37** **S 38** **S 39** **S 40** **S 41**	**S 36/1** **S 37/1** **S 38/1** **S 39/1** **S 40/1** **S 41/1**	12/60 24/60 48/60 110/60 115/60 230/60	Alternating current 60 Hz
S 56 **S 57** **S 58**	**S 56/1** **S 57/1** **S 58/1**	24/50-60 110/50-60 230/50-60	Alternating current 50/60 Hz

Closing plate

Ordering code
300.12.00

Weight 14 gr.

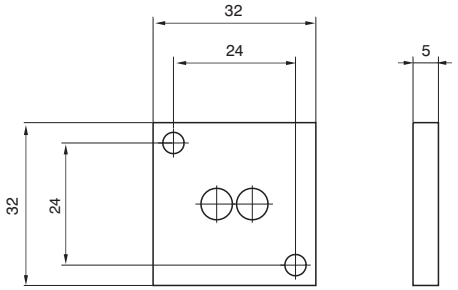

External feeding base

To be used with electrodistributeurs to get a different piloting pressure from the line one.

Ordering code
300.10.05

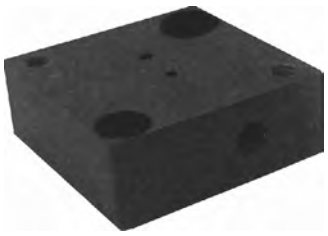

Weight 35 gr.

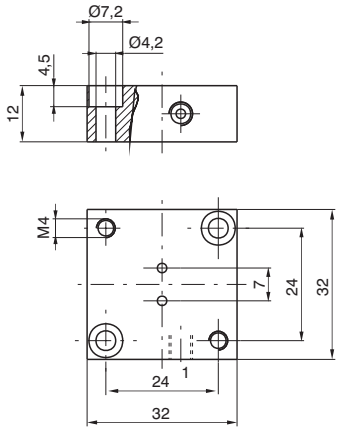

Individual base

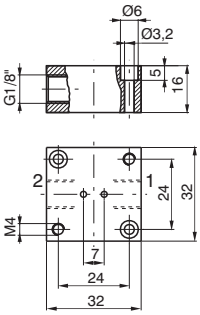

Weight 40 gr.

In line port - thread G 1/8"
1 = INLET PORT (N.C.)
2 = OUTLET PORT (N.C.)
With solenoid valve N.O.
1 = EXHAUST PORT
2 = OUTLET PORT

Ordering code
300.04.00

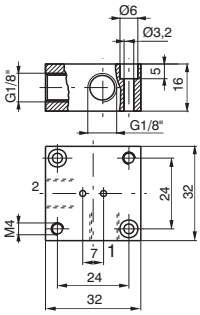

Weight 40 gr.

90° Port - thread G 1/8"
1= INLET PORT (N.C.)
2 = OUTLET PORT (N.C)
With solenoid valve N.O.
1 = EXHAUST PORT
2 = OUTLET PORT

Ordering code
300.04.90

Electrical connector

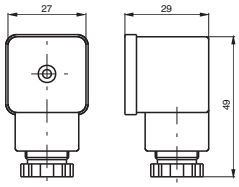

Weight 25 gr.

Ordering code	
300.11.00	Standard
300.11.0_L	Led
	1 = 24 V D.C. / A.C.
	2 = 110 V 50/60 Hz
	3 = 230 V 50/60 Hz

Modular bases for series mounting

Ordering code
Initial base
300.05.00
Intermediate base
300.06.00
Last base
300.07.00
Bored specer
300.05.01
Weight 5 gr.
Solid space
300.05.02
Weight 6 gr.

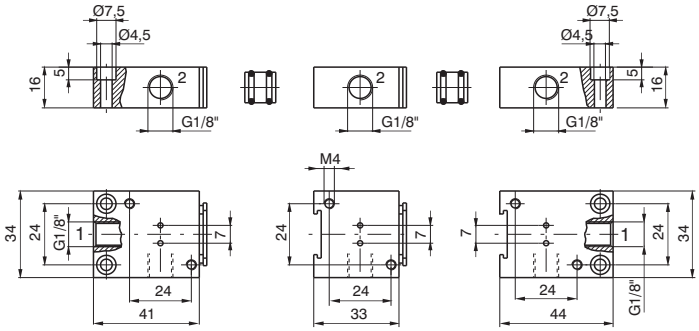

Initial base Intermediate base Last base

Weight 52 gr. Weight 40 gr. Weight 52 gr.

Multiple integral bases for series mounting

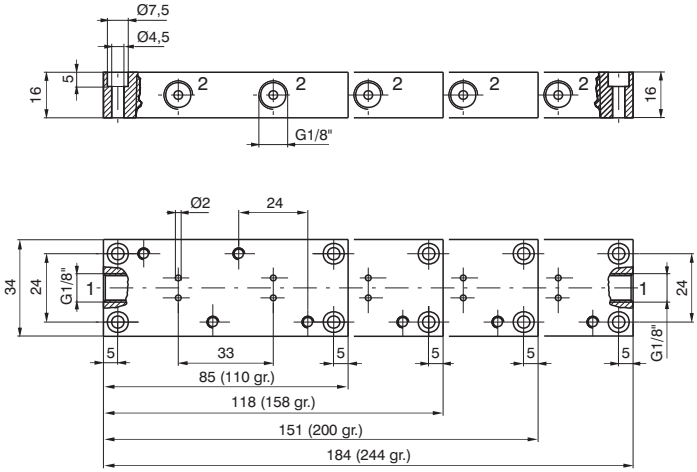

Ordering code	
300.08.02	**2** positions
300.08.03	**3** positions
300.08.04	**4** positions
300.08.05	**5** positions

General

The series c UL us homologated solenoid valves (valid for USA and Canada file n. E206325-VAIU2, VAIU8) are different from the standard ones for microsolenoid made with an injected RYNITE embedded copper wire (they are included in class "F" insulation).

Refer to standard versions as for as other details and accessories to be used with solenoid valves.

Miniature solenoid valve 10mm

Ordering code

UN3 _ _ . _

- **6** = 2/2 N.C.
- **7** = 3/2 N.C.
- **8** = 3/2 N.O.
- **1** = 24 V D.C.
- **2** = 12 V D.C.
- **1** = 90° connector with Led
- **2** = Cable 300 mm (IP40)
- **3** = Line connector with Led
- **4** = 90° connector without Led
- **5** = Line connector without Led
- **32** = Cable (300 mm) coil incorporated (IP65)



Miniature solenoid valve 15mm

Ordering code

UN3 _ _ . _ _

- **3** = 3/2 N.C.
- **4** = 3/2 N.O.
- **1** = 24 V D.C.
- **2** = 12 V D.C.
- **5** = 24 V 50/60 Hz
- **6** = 110-120 V 50/60 Hz
- **7** = 230V 50/60 Hz
- **A** = Orifice Ø1,1
- **B** = Orifice Ø1,5
- **0** = Faston
- **1** = Faston EN17301-803 (Ex DIN 43650)
- **2** = Cables* (300 mm)


* On request and for large quantity only (only 24 V D.C. 2,3 W)

Miniature solenoid valve 22mm

Ordering code

Coil	**UMB _**	
Miniature solenoid valve N.C.	**UM2 . _**	**4** = 12V D.C. **5** = 24V D.C. **56** = 24V 50/60 Hz
Miniature solenoid valve N.O.	**UM2/1. _**	**57** = 110-120 V 50/60 Hz **58** = 230V 50/60 Hz


Miniature solenoid valve 22mm for series mounting

Ordering code

Coil N.C. **UMB** __
- **4** = 12 V D.C.
- **5** = 24 V D.C.
- **56** = 24 V 50/60 Hz
- **57** = 110-120 V 50/60 Hz
- **58** = 230 V 50/60 Hz

Coil N.O. **UMB** __/1
- **10** = 24 V D.C. 8W
- **56** = 24 V 50/60 Hz
- **57** = 110-120 V 50/60 Hz
- **58** = 230 V 50/60 Hz

Solenoid valve N.C. **U3** __ **5.M** __
- **0** = G1/8"
- **5** = M5
- **4** = fitting for 4mm tube
- **4** = 12 V D.C.
- **5** = 24 V D.C.
- **56** = 24 V 50/60 Hz
- **57** = 110-120 V 50/60 Hz
- **58** = 230 V 50/60 Hz

Solenoid valve N.O. **U3** __ **5.M** __/1
- **0** = G1/8"
- **5** = M5
- **4** = fitting for 4mm tube
- **10** = 24 V D.C. 8W
- **56** = 24 V 50/60 Hz
- **57** = 110-120 V 50/60 Hz
- **58** = 230 V 50/60 Hz

Bi-stable miniature solenoid valve 22mm

Ordering code

Coil **UMBB5**

Miniature solenoid valve for distributors and bases (N.C.) **UM5/B**

Miniature solenoid valve with inseries mounting base (N.C.) **U3** __ **5.M5/B**
- **0** = G1/8"
- **5** = M5
- **4** = fitting for 4mm tube

Solenoid valve 30 mm (for mechanics M3 and M4)

Ordering code

UMC5 = 24 V D.C.
UMC56 = 24 V 50/60 Hz
UMC57 = 110÷120 V 50/60 Hz
UMC58 = 230 V 50/60 Hz

Solenoid valve 32 mm

Ordering code

Solenoid valve N.C. **US** __

Solenoid valve N.O. **US** __/1
- **4** = 12 V D.C.
- **5** = 24 V D.C.
- **56** = 24 V 50/60 Hz
- **57** = 110-120 V 50/60 Hz
- **58** = 230 V 50/60 Hz

2

General

The trend towards the miniaturization of components has been consolidated. The use of new technologies makes it possible to manufacture components with high flow rates but extremely compact sizes.
Electric piloting is by means of low-absorption miniature solenoids which are easily connected to the electronic control systems of machines (PLC). Another object of study have been manifolds and multiple bases for ganged assembly of valves or solenoid valves with option for having outlets 2 and 4 either on the valve body or on the base through threaded holes or integrated quick connections provided.
Versions 3/2 and 5/2 are fitted with pneumatic and electropneumatic controls with resetting by mechanically or pneumatically operated spring, or by pneumatic or electropneumatic operation on the bistable versions.
The basic difference between this type of distributors and the others we produce, based on the spool system, lies in the fact that the seals rest on the spool and are dynamic, instead of being locked intoo spool the valve body by means of spacers. By this means a compact size is obtained and the distributors can be slotted into bases and manifolds by means of two screws.

Structural characteristics

Body	Aluminium
Operators	Aluminium
Spool	Aluminium
Pistons	Aluminium
Seals	HNBR
Spring	Stainless steel

Use and maintenance

These valves have an average life of 15 million cycles depending on the application and air quality, filtered and lubricated air using specified lubricants will dramatically reduce the wear of the seals and ensures long and trouble free operation.
Please ensure that the valve is being used according with the manufacturers specification, such as air pressure and temperature and that exhaust ports 3 & 5 are protected against the possible ingress of dirt or debris.
Repair kits including the spool complete with seals are available for overhauling the valves; however, although this is a simple operation it should be carried out by a competent person.

ATTENTION: use hydraulic oil class H for lubrication such as MAGNA GC 32 (Castrol).

How to order the electrodistributors

Example:

805.52.0.1.01 Electrodistributor with miniature solenoid 12 V D.C.

List of codes for tensions:

01 = miniature solenoid 12 V D.C.
02 = miniature solenoid 24 V D.C.
05 = miniature solenoid 24 V A.C.
06 = miniature solenoid 110 V A.C.
07 = miniature solenoid 230 V A.C.

The electropilot utilized is a 15 mm 3/2 N.C. miniature solenoid with faston and 1.1 mm orifice (see Series 300,).

Miniature solenoid c UL us homologated are available (see series 300)

3/2 Solenoid - Spring

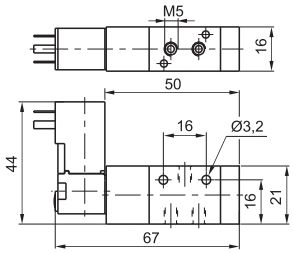

Weight gr. 80
Minimum working pressure 2 bar

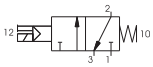

Ordering code

805.Ⓣ.0.1.Ⓥ

Ⓣ	TYPE
	32=3 ways
	52=5 ways
Ⓥ	VOLTAGE
	01=12V D.C.
	02=24V D.C.
	05=24V A.C.
	06=110V A.C.
	07=230V A.C.

Solenoid - Spring 5/2

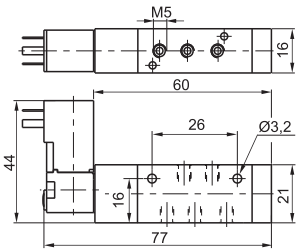

Weight gr. 85
Minimum working pressure 2 bar

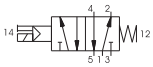

Operational characteristics

Fluid	Max working pressure (bar)	Temperature °C	Flow rate at 6 bar with Δp=1 (Nl/min)	Orifice size (mm)	Working ports size
Filtered and lubricated air	10 bar	-5 ÷ +50	160 Nl/min	mm 2,5	M5

3/2 Solenoid - Differential

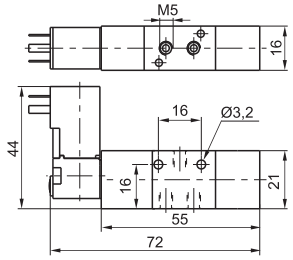

Weight gr. 85
Minimum working pressure 2 bar

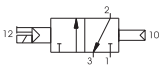

Ordering code

805.Ⓣ.0.12.Ⓥ

Ⓣ	TYPE
	32=3 ways
	52=5 ways
Ⓥ	VOLTAGE
	01=12V D.C.
	02=24V D.C.
	05=24V A.C.
	06=110V A.C.
	07=230V A.C.

Solenoid - Differential 5/2

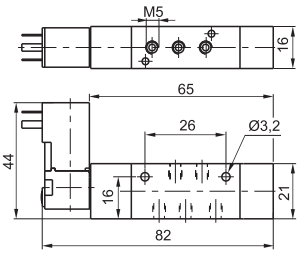

Weight gr. 90
Minimum working pressure 2 bar

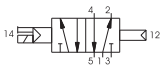

Operational characteristics

Fluid	Max working pressure (bar)	Temperature °C	Flow rate at 6 bar with Δp=1 (Nl/min)	Orifice size (mm)	Working ports size
Filtered and lubricated air	10 bar	-5 ÷ +50	160 Nl/min	mm 2,5	M5

3/2 Solenoid - Solenoid

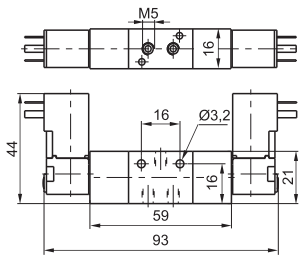

Weight gr. 120
Minimum working pressure 1,5 bar

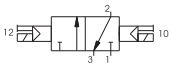

Ordering code

805.Ⓣ.0.0.Ⓥ

Ⓣ	TYPE
	32=3 ways
	52=5 ways
Ⓥ	VOLTAGE
	01=12V D.C.
	02=24V D.C.
	05=24V A.C.
	06=110V A.C.
	07=230V A.C.

Solenoid - Solenoid 5/2

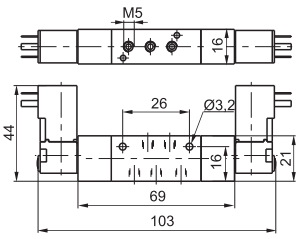

Weight gr. 125
Minimum working pressure 1,5 bar

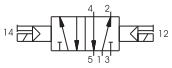

Operational characteristics

Fluid	Max working pressure (bar)	Temperature °C	Flow rate at 6 bar with Δp=1 (Nl/min)	Orifice size (mm)	Working ports size
Filtered and lubricated air	10 bar	-5 ÷ +50	160 Nl/min	mm 2,5	M5

Manifolds

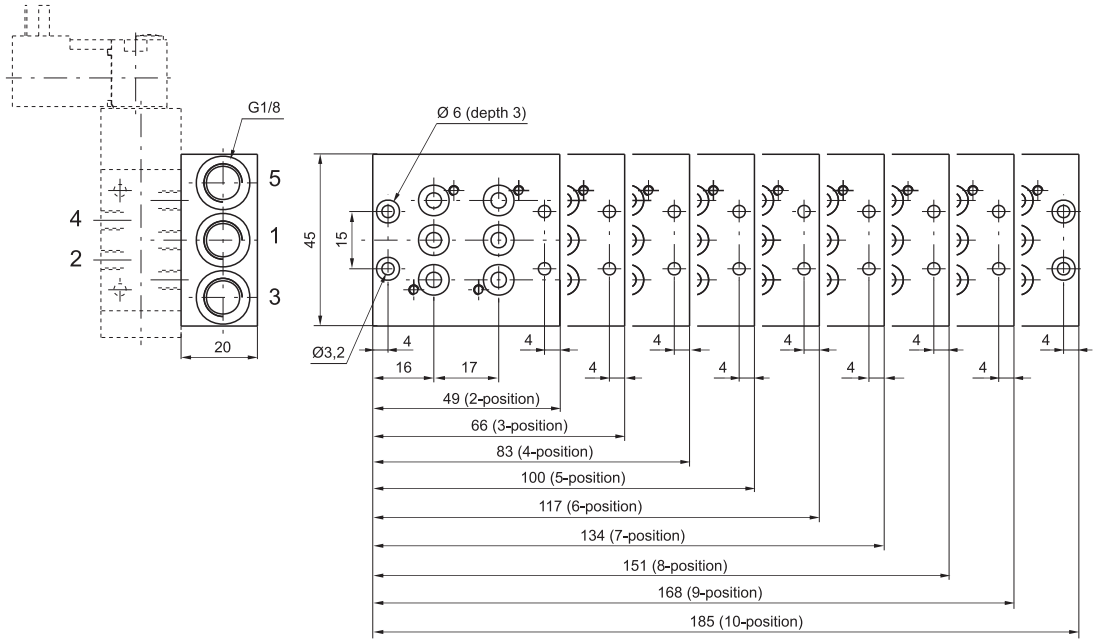

Ordering code

805.Ⓟ

	N. POSITIONS
Ⓟ	02=2 pos. (weight gr. 95)
	03=3 pos. (weight gr. 130)
	04=4 pos. (weight gr. 160)
	05=5 pos. (weight gr. 190)
	06=6 pos. (weight gr. 225)
	07=7 pos. (weight gr. 260)
	08=8 pos. (weight gr. 290)
	09=9 pos. (weight gr. 325)
	10=10 pos. (weight gr. 365)

Clip

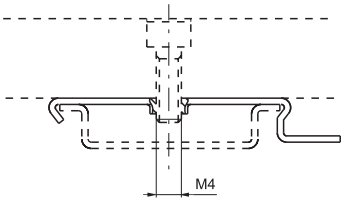

Ordering code

800.00

Weight gr. 5 - (for mounting the distributors groups on guide DIN 46277/3)

Closing plate

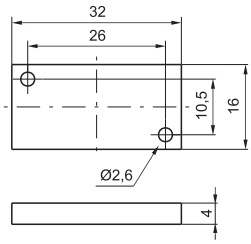

Ordering code

805.00

Weight gr. 15

General

These are 2 stage valves actuated electro-pneumatically. A serie 300 directly operated solenoid valve actuates pneumatically the principal power distributor. This integrated system allows configurations of systems requiring very little space. The pilot air is normally taken from the inlet port (autofeed) and the only actuating signal is electric.
The range of the solenoid valves, as far as dimensions and mechanical construction, is similar to series 200. We have therefore solenoid valves G 1/8", G 1/4", G 1/2" and G 1" with identical pneumatic characteristics that are, however, actuated electrically. They have a balanced spool, insentive to presence or absence of pressure. They are constructed in 3 and 5 way with 1 solenoid (monostable) or 2 solenoids (bistable) and also 5 ways 3 positions with closed centres, open centres and pressured centres.

If should be noted that the autofeed of the electric pilot requires always inlet through port 1 and if a 3 ways normally open configuration is desired, it is necessary to switch the operators.
In the tables showing individual valves, the quick reference tables show the output in Nl/min at a inlet pressure of 6 bar and a pressure drop of 1 bar. All information was obtained using standards CETOP RP 50P.

Solenoid valves G 1/8" and G 1/4" can be equipped with microsolenoids as well as standard solenoids and they can be mounted in line or in 90 degrees on distributors. Please note that while the microsolenoid can be mounted in any direction, standard solenoid requires mounting as inticated in the photographs and diagrams.

The order codes pertain only to the solenoid valve with mechanical actuator "M2" or solenoid "S*" already assembled (see Series 300, section 1). (M2 coils are not included and have to be ordered separately).

Coils for M2 and solenoids "S" C US homologated are available (see Series 300).

Construction characteristics

Body	Aluminium
Operators	Aluminium Technopolymer for spring botton plate G 1/8", G1/4", G 1/2" and aluminium for G 1"
Spools	Stainless steel / Technopolymer fpt Series T488
Seals	NBR Polyurethane compound for oil free applications G 1/8", G 1/4" and G 1/2"
Spacers	Technopolymer (aluminium for G1")
Spring	Stainless steel or spring steel

Use and maintenance

These valves have an average life of 15 million cycles depending on the application and air quality, filtered and lubricated air using specified lubricants will dramatically reduce the wear of the seals and ensures long and trouble free operation.
Please ensure that the valve is being used according with the manufacturers specification, such as air pressure and temperature and that exhaust ports 3 & 5 are protected against the possible ingress of dirt or debris.
Repair kits including the spool complete with seals are available for overhauling the valves; however, although this is a simple operation it should be carried out by a competent person.

ATTENTION: use hydraulic oil class H for lubrication such as MAGNA GC 32 (Castrol).

2

Solenoid - Spring | 3/2 | Ordering code | 5/2 | **Solenoid - Spring**

468.Ⓣ.0.1.M2

	TYPE
Ⓣ	32=3 ways
	52=5 ways

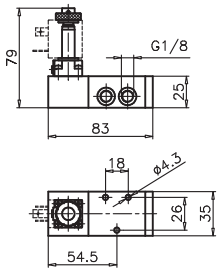

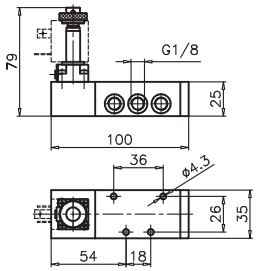

Weight gr. 240
Minimum working pressure 2,5 bar

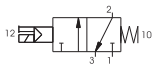

Weight gr. 240
Minimum working pressure 2,5 bar

Operational characteristics

Fluid	Max working pressure (bar)	Temperature °C	Flow rate at 6 bar with Δp=1 (Nl/min)	Orifice size (mm)	Working ports size
Filtered and lubricated air	10 bar	-5 ÷ +50	540 Nl/min	mm 6	G 1/8"

Solenoid - Differential | 3/2 | Ordering code | 5/2 | **Solenoid - Differential**

468.Ⓣ.0.12.M2

	TYPE
Ⓣ	32=3 ways
	52=5 ways

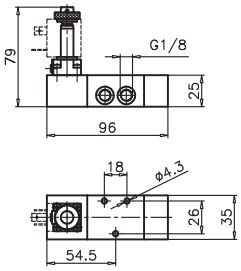

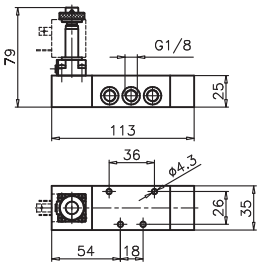

Weight gr. 280
Minimum working pressure 2,5 bar

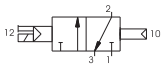

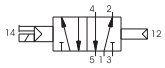

Weight gr. 320
Minimum working pressure 2,5 bar

Operational characteristics

Fluid	Max working pressure (bar)	Temperature °C	Flow rate at 6 bar with Δp=1 (Nl/min)	Orifice size (mm)	Working ports size
Filtered and lubricated air	10 bar	-5 ÷ +50	540 Nl/min	mm 6	G 1/8"

Solenoid - Solenoid | 3/2 | Ordering code | 5/2 | **Solenoid - Solenoid**

468.Ⓣ.0.0.M2

	TYPE
Ⓣ	32=3 ways
	52=5 ways

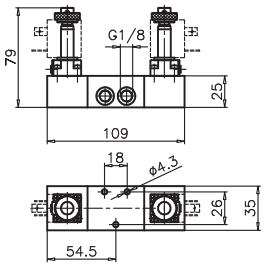

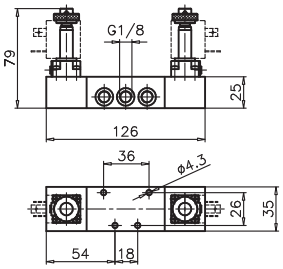

Weight gr. 370
Minimum working pressure 2 bar

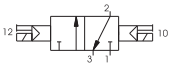

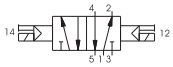

Weight gr. 410
Minimum working pressure 2 bar

Operational characteristics

Fluid	Max working pressure (bar)	Temperature °C	Flow rate at 6 bar with Δp=1 (Nl/min)	Orifice size (mm)	Working ports size
Filtered and lubricated air	10 bar	-5 ÷ +50	540 Nl/min	mm 6	G 1/8"

Solenoid - Solenoid

5/3

Ordering code
468.53.Ⓕ.0.0.M2

	FUNCTION
Ⓕ	31=Closed centres
	32=Open centres
	33=Pressured centres

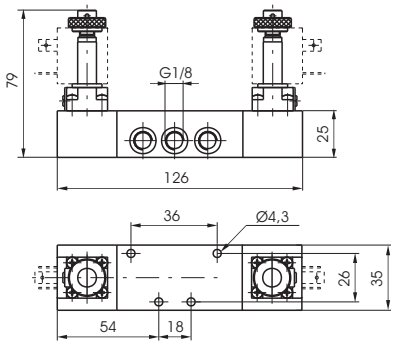

Weight gr. 420
Minimum working pressure 3 bar

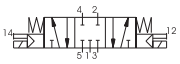
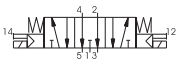
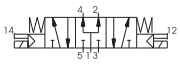

Operational characteristics

Fluid	Max working pressure (bar)	Temperature °C	Flow rate at 6 bar with Δp=1 (Nl/min)	Orifice size (mm)	Working ports size
Filtered and lubricated air	10 bar	-5 ÷ +50	410 Nl/min	mm 6	G 1/8"

3/2 Solenoid - Spring

Ordering code
468/1.Ⓣ.0.1.M2

	TYPE
Ⓣ	32=3 ways
	52=5 ways

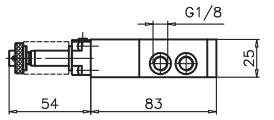

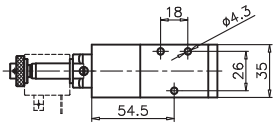

Weight gr. 240
Minimum working pressure 2,5 bar

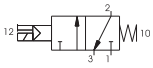

Solenoid - Spring 5/2

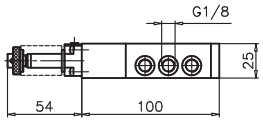

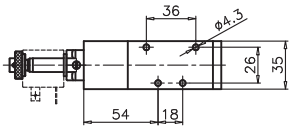

Weight gr. 280
Minimum working pressure 2,5 bar

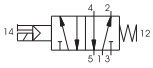

Operational characteristics

Fluid	Max working pressure (bar)	Temperature °C	Flow rate at 6 bar with Δp=1 (Nl/min)	Orifice size (mm)	Working ports size
Filtered and lubricated air	10 bar	-5 ÷ +50	540 Nl/min	mm 6	G 1/8"

3/2 Solenoid - Differential

Ordering code
468/1.Ⓣ.0.12.M2

	TYPE
Ⓣ	32=3 ways
	52=5 ways

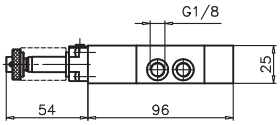

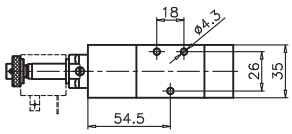

Weight gr. 280
Minimum working pressure 2,5 bar

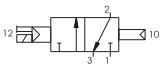

Solenoid - Differential 5/2

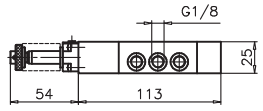

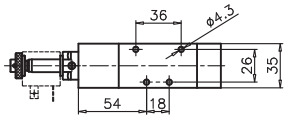

Weight gr. 320
Minimum working pressure 2,5 bar

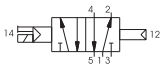

Operational characteristics

Fluid	Max working pressure (bar)	Temperature °C	Flow rate at 6 bar with Δp=1 (Nl/min)	Orifice size (mm)	Working ports size
Filtered and lubricated air	10 bar	-5 ÷ +50	540 Nl/min	mm 6	G 1/8"

3/2 **Solenoid - Solenoid**

Ordering code

468/1.Ⓣ.0.0.M2

Ⓣ	TYPE
	32=3 ways
	52=5 ways

Solenoid - Solenoid 5/2

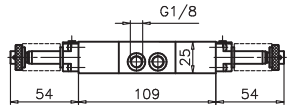

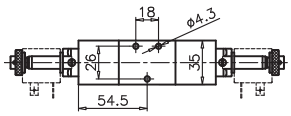

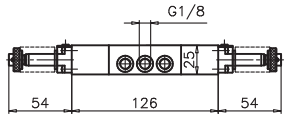

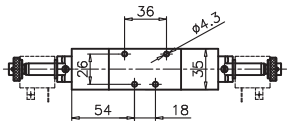

Weight gr. 370
Minimum working pressure 2 bar

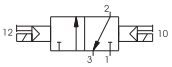

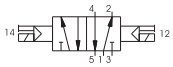

Weight gr. 410
Minimum working pressure 2 bar

Operational characteristics

Fluid	Max working pressure (bar)	Temperature °C	Flow rate at 6 bar with Δp=1 (Nl/min)	Orifice size (mm)	Working ports size
Filtered and lubricated air	10 bar	-5 ÷ +50	540 Nl/min	mm 6	G 1/8"

Solenoid - Solenoid 5/3

Ordering code

468/1.53.Ⓕ.0.0.M2

Ⓕ	FUNCTION
	31=Closed centres
	32=Open centres
	33=Pressured centres

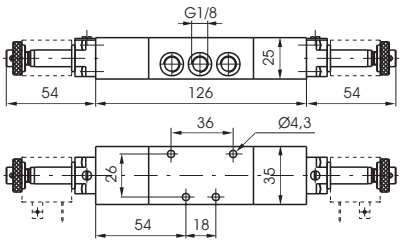

Weight gr. 420
Minimum working pressure 3 bar

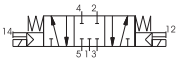

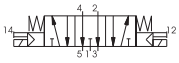

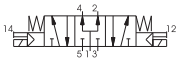

Operational characteristics

Fluid	Max working pressure (bar)	Temperature °C	Flow rate at 6 bar with Δp=1 (Nl/min)	Orifice size (mm)	Working ports size
Filtered and lubricated air	10 bar	-5 ÷ +50	410 Nl/min	mm 6	G 1/8"

Solenoid - Spring

Ordering code	
488.32.0.1.Ⓢ	
Ⓢ	VOLTAGE
	M11=24V D.C. (rating power 3,8W)
	M56=24V 50/60Hz (starting power 9VA, rating power 6VA)
	M57=110V 50/60Hz (starting power 9VA, rating power 6VA)
	M58=230V 50/60Hz (starting power 9VA, rating power 6VA)

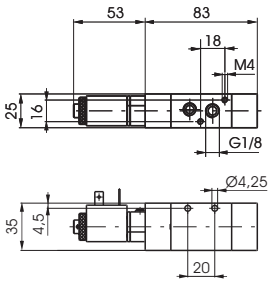

Weight gr. 220
Minimum working pressure 2,5 bar

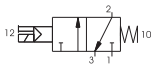

Operational characteristics		Shifting time of pneumatic directional control valves or moving parts, logic devices were measured in accordance to ISO 12238:2001					
Fluid	Flow rate at 6 bar with Δp=1 (Nl/min)	Responce time according to ISO 12238, activation time (ms)	Responce time according to ISO 12238, deactivation time	Max working pressure (bar)	Orifice size (mm)	Working ports size	Temperature °C
Filtered and lubricated air	620	20,3	44,5	10	6	G1/8"	-5 ÷ +50

Solenoid - Spring

Ordering code	
488.52.0.1.Ⓢ	
Ⓢ	VOLTAGE
	M11=24V D.C. (rating power 3,8W)
	M56=24V 50/60Hz (starting power 9VA, rating power 6VA)
	M57=110V 50/60Hz (starting power 9VA, rating power 6VA)
	M58=230V 50/60Hz (starting power 9VA, rating power 6VA)

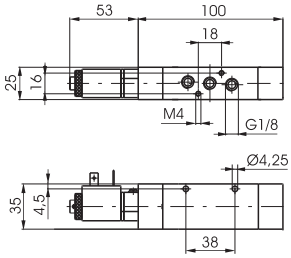

Weight gr. 260
Minimum working pressure 2,5 bar

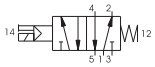

Operational characteristics		Shifting time of pneumatic directional control valves or moving parts, logic devices were measured in accordance to ISO 12238:2001					
Fluid	Flow rate at 6 bar with Δp=1 (Nl/min)	Responce time according to ISO 12238, activation time (ms)	Responce time according to ISO 12238, deactivation time	Max working pressure (bar)	Orifice size (mm)	Working ports size	Temperature °C
Filtered and lubricated air	620	22,5	47,0	10	6	G1/8"	-5 ÷ +50

Solenoid - Differential

Ordering code	
488.32.0.12.Ⓢ	
Ⓢ	VOLTAGE
	M11=24V D.C. (rating power 3,8W)
	M56=24V 50/60Hz (starting power 9VA, rating power 6VA)
	M57=110V 50/60Hz (starting power 9VA, rating power 6VA)
	M58=230V 50/60Hz (starting power 9VA, rating power 6VA)

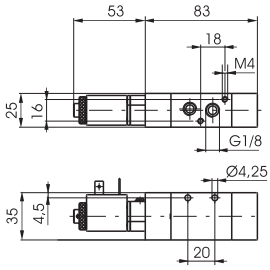

Weight gr. 220
Minimum working pressure 2,5 bar

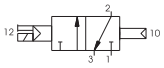

Operational characteristics		Shifting time of pneumatic directional control valves or moving parts, logic devices were measured in accordance to ISO 12238:2001					
Fluid	Flow rate at 6 bar with Δp=1 (Nl/min)	Responce time according to ISO 12238, activation time (ms)	Responce time according to ISO 12238, deactivation time	Max working pressure (bar)	Orifice size (mm)	Working ports size	Temperature °C
Filtered and lubricated air	620	28,0	34,5	10	6	G1/8"	-5 ÷ +50

Solenoid - Differential

Ordering code	
488.52.0.12.Ⓢ	
Ⓢ	VOLTAGE
	M11=24V D.C. (rating power 3,8W)
	M56=24V 50/60Hz (starting power 9VA, rating power 6VA)
	M57=110V 50/60Hz (starting power 9VA, rating power 6VA)
	M58=230V 50/60Hz (starting power 9VA, rating power 6VA)

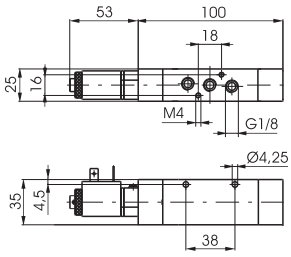

Weight gr. 260
Minimum working pressure 2,5 bar

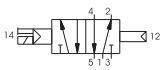

Operational characteristics		Shifting time of pneumatic directional control valves or moving parts, logic devices were measured in accordance to ISO 12238:2001					
Fluid	Flow rate at 6 bar with Δp=1 (Nl/min)	Responce time according to ISO 12238, activation time (ms)	Responce time according to ISO 12238, deactivation time	Max working pressure (bar)	Orifice size (mm)	Working ports size	Temperature °C
Filtered and lubricated air	620	28,3	35,5	10	6	G1/8"	-5 ÷ +50

Solenoid - Solenoid

Ordering code	
488.32.0.0.Ⓢ	
Ⓢ	VOLTAGE
	M11=24V D.C. (rating power 3,8W)
	M56=24V 50/60Hz (starting power 9VA, rating power 6VA)
	M57=110V 50/60Hz (starting power 9VA, rating power 6VA)
	M58=230V 50/60Hz (starting power 9VA, rating power 6VA)

Weight gr. 320
Minimum working pressure 2 bar

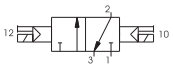

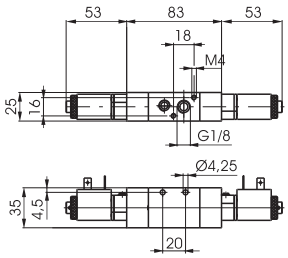

Operational characteristics		Shifting time of pneumatic directional control valves or moving parts, logic devices were measured in accordance to ISO 12238:2001					
Fluid	Flow rate at 6 bar with Δp=1 (Nl/min)	Responce time according to ISO 12238, activation time (ms)	Responce time according to ISO 12238, deactivation time	Max working pressure (bar)	Orifice size (mm)	Working ports size	Temperature °C
Filtered and lubricated air	620	19,0	21,1	10	6	G1/8"	-5 ÷ +50

Solenoid - Solenoid

Ordering code	
488.52.0.0.Ⓢ	
Ⓢ	VOLTAGE
	M11=24V D.C. (rating power 3,8W)
	M56=24V 50/60Hz (starting power 9VA, rating power 6VA)
	M57=110V 50/60Hz (starting power 9VA, rating power 6VA)
	M58=230V 50/60Hz (starting power 9VA, rating power 6VA)

Weight gr. 360
Minimum working pressure 2 bar

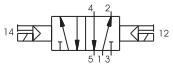

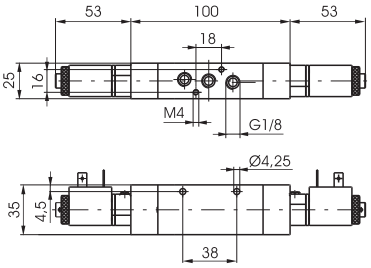

Operational characteristics		Shifting time of pneumatic directional control valves or moving parts, logic devices were measured in accordance to ISO 12238:2001					
Fluid	Flow rate at 6 bar with Δp=1 (Nl/min)	Responce time according to ISO 12238, activation time (ms)	Responce time according to ISO 12238, deactivation time	Max working pressure (bar)	Orifice size (mm)	Working ports size	Temperature °C
Filtered and lubricated air	620	18,2	18,5	10	6	G1/8"	-5 ÷ +50

Solenoid - Solenoid (Closed centres)

Ordering code

488.53.31.0.0.Ⓢ

	VOLTAGE
Ⓢ	M11=24V D.C. (rating power 3,8W)
	M56=24V 50/60Hz (starting power 9VA, rating power 6VA)
	M57=110V 50/60Hz (starting power 9VA, rating power 6VA)
	M58=230V 50/60Hz (starting power 9VA, rating power 6VA)

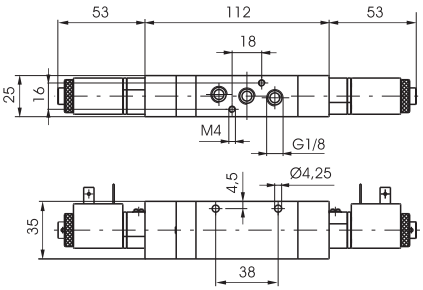

Weight gr. 400
Minimum working pressure 3 bar

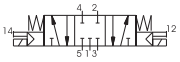

Operational characteristics		Shifting time of pneumatic directional control valves or moving parts, logic devices were measured in accordance to ISO 12238:2001					
Fluid	Flow rate at 6 bar with Δp=1 (Nl/min)	Responce time according to ISO 12238, activation time (ms)	Responce time according to ISO 12238, deactivation time	Max working pressure (bar)	Orifice size (mm)	Working ports size	Temperature °C
Filtered and lubricated air	410	23,0	41,0	10	6	G1/8"	-5 ÷ +50

Solenoid - Solenoid (Open centres)

Ordering code

488.53.32.0.0.Ⓢ

	VOLTAGE
Ⓢ	M11=24V D.C. (rating power 3,8W)
	M56=24V 50/60Hz (starting power 9VA, rating power 6VA)
	M57=110V 50/60Hz (starting power 9VA, rating power 6VA)
	M58=230V 50/60Hz (starting power 9VA, rating power 6VA)

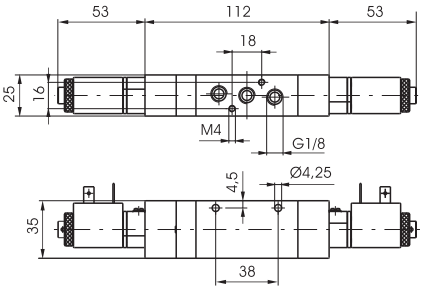

Weight gr. 400
Minimum working pressure 3 bar

Operational characteristics		Shifting time of pneumatic directional control valves or moving parts, logic devices were measured in accordance to ISO 12238:2001					
Fluid	Flow rate at 6 bar with Δp=1 (Nl/min)	Responce time according to ISO 12238, activation time (ms)	Responce time according to ISO 12238, deactivation time	Max working pressure (bar)	Orifice size (mm)	Working ports size	Temperature °C
Filtered and lubricated air	410	21,5	38,0	10	6	G1/8"	-5 ÷ +50

Solenoid - Solenoid (Pressured centres)

Ordering code

488.53.33.0.0.Ⓢ

	VOLTAGE
Ⓢ	M11=24V D.C. (rating power 3,8W)
	M56=24V 50/60Hz (starting power 9VA, rating power 6VA)
	M57=110V 50/60Hz (starting power 9VA, rating power 6VA)
	M58=230V 50/60Hz (starting power 9VA, rating power 6VA)

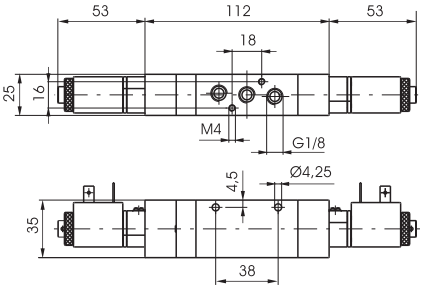

Weight gr. 400
Minimum working pressure 3 bar

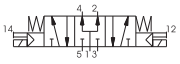

Operational characteristics		Shifting time of pneumatic directional control valves or moving parts, logic devices were measured in accordance to ISO 12238:2001					
Fluid	Flow rate at 6 bar with Δp=1 (Nl/min)	Responce time according to ISO 12238, activation time (ms)	Responce time according to ISO 12238, deactivation time	Max working pressure (bar)	Orifice size (mm)	Working ports size	Temperature °C
Filtered and lubricated air	410	18,9	40,2	10	6	G1/8"	-5 ÷ +50

Manifolds

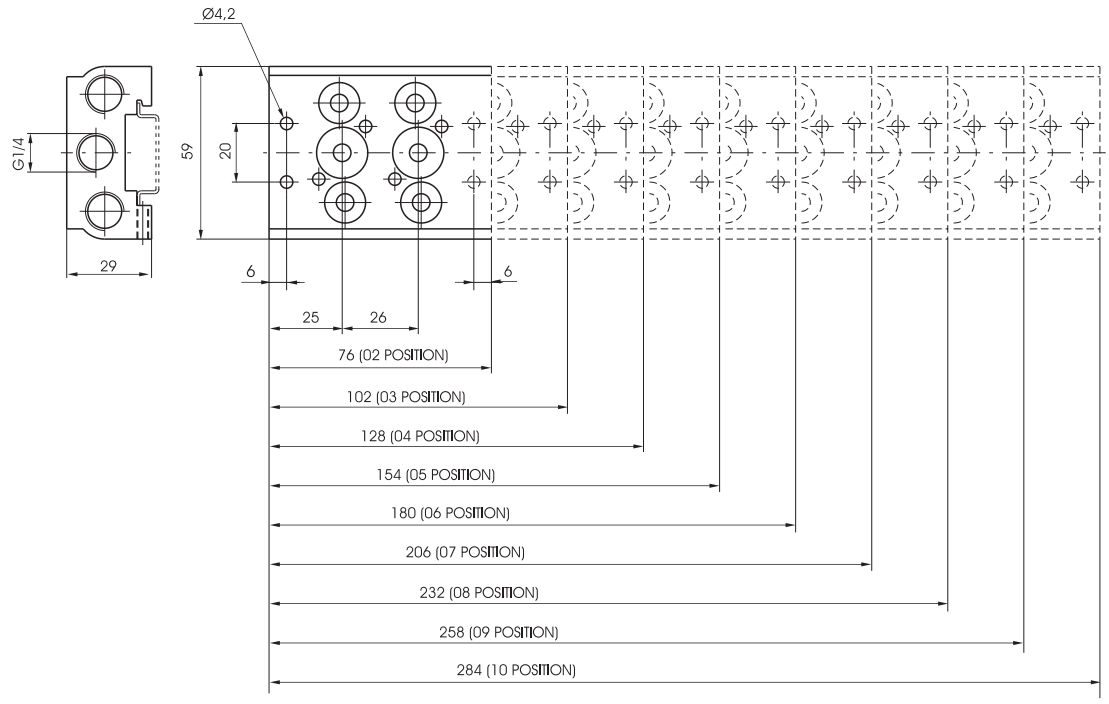

Ordering code
488.Ⓟ

Ⓟ	POSITION
	02=2 pos. (220 gr)
	03=3 pos. (290 gr)
	04=4 pos. (360 gr)
	05=5 pos. (430 gr)
	06=6 pos. (500 gr)
	07=7 pos. (570 gr)
	08=8 pos. (640 gr)
	09=9 pos. (710 gr)
	10=10 pos. (780 gr)

Closing plate

Ordering code
488.00

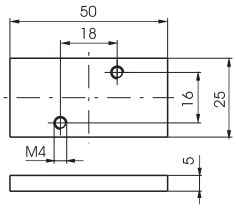

Weight gr. 25

Solenoid - Spring (Self-feeding)

Ordering code

T488.32.0.1.Ⓥ

	VOLTAGE
Ⓥ	M9=24V D.C. (rating power 2W)
	M11=24V D.C. (rating power 3,8W)
	M56=24V 50/60 Hz (starting power 9VA, rating power 6VA)
	M57=110 V 50/60 Hz (starting power 9VA, rating power 6VA)
	M58=230V 50/60Hz (starting power 9VA, rating power 6VA)

Weight gr. 160
Minimum working pressure 2,5 bar

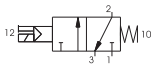

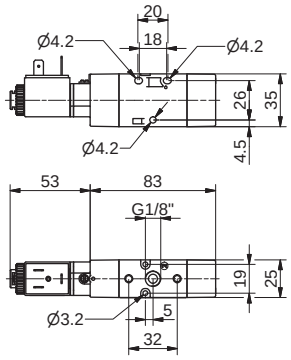

Operational characteristics — Shifting time of pneumatic directional control valves or moving parts, logic devices were measured in accordance to ISO 12238:2001

Fluid	Flow rate at 6 bar with Δp=1 (Nl/min)	Responce time according to ISO 12238, activation time (ms)	Responce time according to ISO 12238, deactivation time	Max working pressure (bar)	Orifice size (mm)	Working ports size	Temperature °C
Filtered and lubricated air	620	23,4	41,0	10	6	G1/8"	-5 ÷ +50

Solenoid - Spring (Self-feeding)

Ordering code

T488.52.0.1.Ⓥ

	VOLTAGE
Ⓥ	M9=24V D.C. (rating power 2W)
	M11=24V D.C. (rating power 3,8W)
	M56=24V 50/60 Hz (starting power 9VA, rating power 6VA)
	M57=110 V 50/60 Hz (starting power 9VA, rating power 6VA)
	M58=230V 50/60Hz (starting power 9VA, rating power 6VA)

Weight gr. 190
Minimum working pressure 2,5 bar

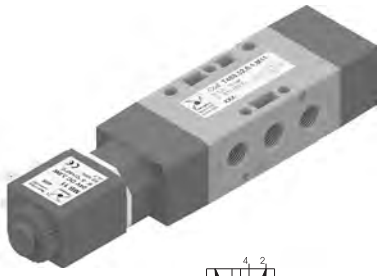

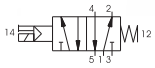

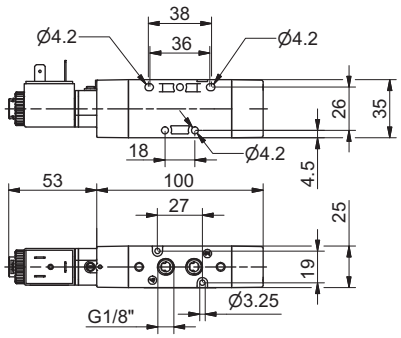

Operational characteristics — Shifting time of pneumatic directional control valves or moving parts, logic devices were measured in accordance to ISO 12238:2001

Fluid	Flow rate at 6 bar with Δp=1 (Nl/min)	Responce time according to ISO 12238, activation time (ms)	Responce time according to ISO 12238, deactivation time	Max working pressure (bar)	Orifice size (mm)	Working ports size	Temperature °C
Filtered and lubricated air	620	22,8	44,5	10	6	G1/8"	-5 ÷ +50

Solenoid - Spring (External feeding)

Ordering code

T488.32.0.1E.Ⓥ

	VOLTAGE
Ⓥ	M9=24V D.C. (rating power 2W)
	M11=24V D.C. (rating power 3,8W)
	M56=24V 50/60 Hz (starting power 9VA, rating power 6VA)
	M57=110 V 50/60 Hz (starting power 9VA, rating power 6VA)
	M58=230V 50/60Hz (starting power 9VA, rating power 6VA)

Weight gr. 160
Minimum working pressure 2,5 bar

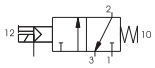

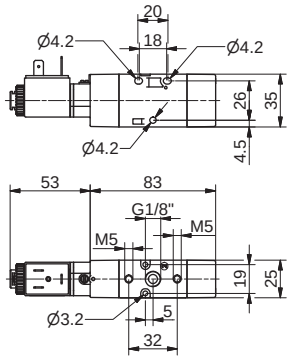

Operational characteristics — Shifting time of pneumatic directional control valves or moving parts, logic devices were measured in accordance to ISO 12238:2001

Fluid	Flow rate at 6 bar with Δp=1 (Nl/min)	Responce time according to ISO 12238, activation time (ms)	Responce time according to ISO 12238, deactivation time	Max working pressure (bar)	Orifice size (mm)	Working ports size	Pilot port size	Temperature °C
Filtered and lubricated air	620	23,4	41,0	10	6	G1/8"	M5	-5 ÷ +50

Solenoid - Spring (External feeding)

Ordering code

T488.52.0.1E.Ⓥ

	VOLTAGE
Ⓥ	M9=24V D.C. (rating power 2W)
	M11=24V D.C. (rating power 3,8W)
	M56=24V 50/60 Hz (starting power 9VA, rating power 6VA)
	M57=110 V 50/60 Hz (starting power 9VA, rating power 6VA)
	M58=230V 50/60Hz (starting power 9VA, rating power 6VA)

Weight gr. 190
Minimum working pressure 2,5 bar

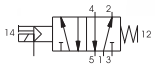

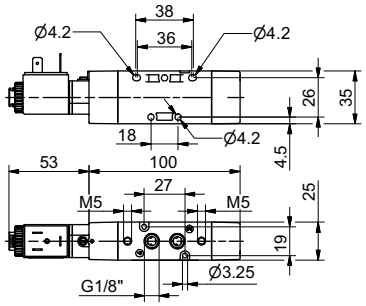

Operational characteristics — Shifting time of pneumatic directional control valves or moving parts, logic devices were measured in accordance to ISO 12238:2001

Fluid	Flow rate at 6 bar with Δp=1 (Nl/min)	Responce time according to ISO 12238, activation time (ms)	Responce time according to ISO 12238, deactivation time	Max working pressure (bar)	Orifice size (mm)	Working ports size	Pilot port size	Temperature °C
Filtered and lubricated air	620	22,8	44,5	10	6	G1/8"	M5	-5 ÷ +50

2

Solenoid - Differential (Self-feeding)

Ordering code

T488.32.0.12.Ⓥ

	VOLTAGE
Ⓥ	M9=24V D.C. (rating power 2W)
	M11=24V D.C. (rating power 3,8W)
	M56=24V 50/60 Hz (starting power 9VA, rating power 6VA)
	M57=110 V 50/60 Hz (starting power 9VA, rating power 6VA)
	M58=230V 50/60Hz (starting power 9VA, rating power 6VA)

Weight gr. 160
Minimum working pressure 2,5 bar

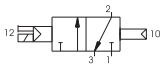

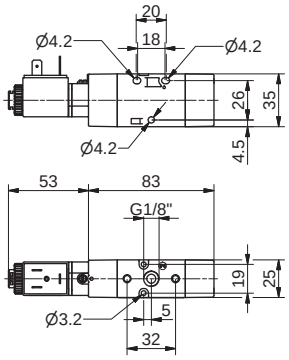

Operational characteristics — Shifting time of pneumatic directional control valves or moving parts, logic devices were measured in accordance to ISO 12238:2001

Fluid	Flow rate at 6 bar with Δp=1 (Nl/min)	Responce time according to ISO 12238, activation time (ms)	Responce time according to ISO 12238, deactivation time	Max working pressure (bar)	Orifice size (mm)	Working ports size	Temperature °C
Filtered and lubricated air	620	31,1	35,0	10	6	G1/8"	-5 ÷ +50

Solenoid - Differential (Self-feeding)

Ordering code

T488.52.0.12.Ⓥ

	VOLTAGE
Ⓥ	M9=24V D.C. (rating power 2W)
	M11=24V D.C. (rating power 3,8W)
	M56=24V 50/60 Hz (starting power 9VA, rating power 6VA)
	M57=110 V 50/60 Hz (starting power 9VA, rating power 6VA)
	M58=230V 50/60Hz (starting power 9VA, rating power 6VA)

Weight gr. 190
Minimum working pressure 2,5 bar

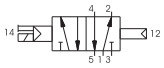

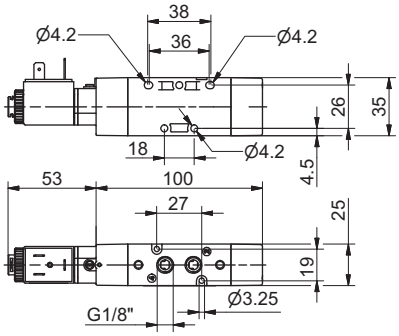

Operational characteristics — Shifting time of pneumatic directional control valves or moving parts, logic devices were measured in accordance to ISO 12238:2001

Fluid	Flow rate at 6 bar with Δp=1 (Nl/min)	Responce time according to ISO 12238, activation time (ms)	Responce time according to ISO 12238, deactivation time	Max working pressure (bar)	Orifice size (mm)	Working ports size	Temperature °C
Filtered and lubricated air	620	27,9	34,5	10	6	G1/8"	-5 ÷ +50

Solenoid - Differential (External feeding)

Ordering code

T488.32.0.12E.Ⓥ

	VOLTAGE
Ⓥ	M9=24V D.C. (rating power 2W)
	M11=24V D.C. (rating power 3,8W)
	M56=24V 50/60 Hz (starting power 9VA, rating power 6VA)
	M57=110 V 50/60 Hz (starting power 9VA, rating power 6VA)
	M58=230V 50/60Hz (starting power 9VA, rating power 6VA)

Weight gr. 160
Minimum working pressure 2,5 bar

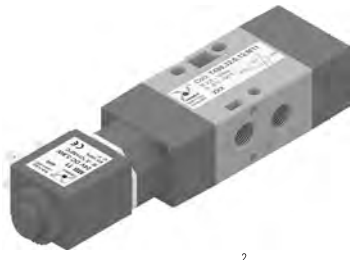

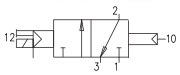

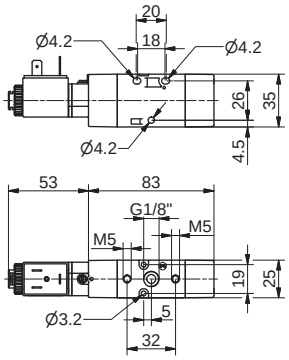

Operational characteristics — Shifting time of pneumatic directional control valves or moving parts, logic devices were measured in accordance to ISO 12238:2001

Fluid	Flow rate at 6 bar with Δp=1 (Nl/min)	Responce time according to ISO 12238, activation time (ms)	Responce time according to ISO 12238, deactivation time	Max working pressure (bar)	Orifice size (mm)	Working ports size	Pilot port size	Temperature °C
Filtered and lubricated air	620	31,1	35,0	10	6	G1/8"	M5	-5 ÷ +50

Solenoid - Differential (External feeding)

Ordering code

T488.52.0.12E.Ⓥ

	VOLTAGE
Ⓥ	M9=24V D.C. (rating power 2W)
	M11=24V D.C. (rating power 3,8W)
	M56=24V 50/60 Hz (starting power 9VA, rating power 6VA)
	M57=110 V 50/60 Hz (starting power 9VA, rating power 6VA)
	M58=230V 50/60Hz (starting power 9VA, rating power 6VA)

Weight gr. 190
Minimum working pressure 2,5 bar

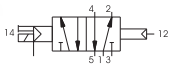

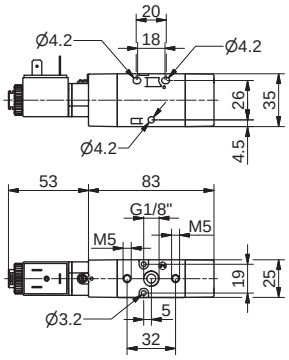

Operational characteristics — Shifting time of pneumatic directional control valves or moving parts, logic devices were measured in accordance to ISO 12238:2001

Fluid	Flow rate at 6 bar with Δp=1 (Nl/min)	Responce time according to ISO 12238, activation time (ms)	Responce time according to ISO 12238, deactivation time	Max working pressure (bar)	Orifice size (mm)	Working ports size	Pilot port size	Temperature °C
Filtered and lubricated air	620	27,9	34,5	10	6	G1/8"	M5	-5 ÷ +50

Solenoid - Solenoid (Self-feeding)

Ordering code

T488.32.0.0.Ⓥ

	VOLTAGE
Ⓥ	M9=24V D.C. (rating power 2W)
	M11=24V D.C. (rating power 3,8W)
	M56=24V 50/60 Hz (starting power 9VA, rating power 6VA)
	M57=110 V 50/60 Hz (starting power 9VA, rating power 6VA)
	M58=230V 50/60Hz (starting power 9VA, rating power 6VA)

Weight gr. 250
Minimum working pressure 2 bar

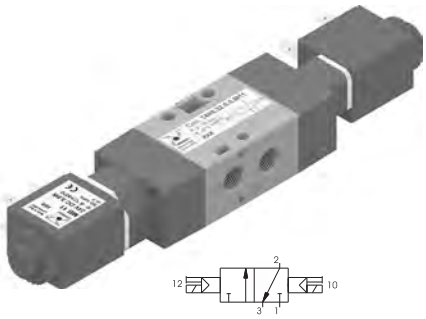

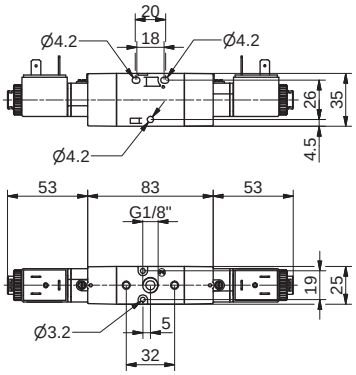

Operational characteristics — Shifting time of pneumatic directional control valves or moving parts, logic devices were measured in accordance to ISO 12238:2001

Fluid	Flow rate at 6 bar with Δp=1 (Nl/min)	Responce time according to ISO 12238, activation time (ms)	Responce time according to ISO 12238, deactivation time	Max working pressure (bar)	Orifice size (mm)	Working ports size	Temperature °C
Filtered and lubricated air	620	18,8	18,0	10	6	G1/8"	-5 ÷ +50

Solenoid - Solenoid (Self-feeding)

Ordering code

T488.52.0.0.Ⓥ

	VOLTAGE
Ⓥ	M9=24V D.C. (rating power 2W)
	M11=24V D.C. (rating power 3,8W)
	M56=24V 50/60 Hz (starting power 9VA, rating power 6VA)
	M57=110 V 50/60 Hz (starting power 9VA, rating power 6VA)
	M58=230V 50/60Hz (starting power 9VA, rating power 6VA)

Weight gr. 290
Minimum working pressure 2 bar

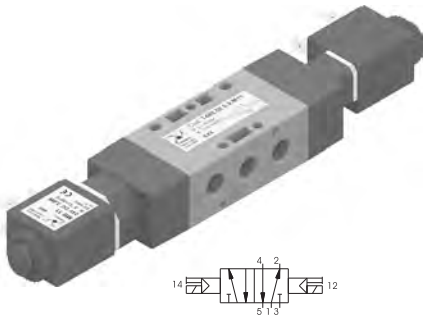

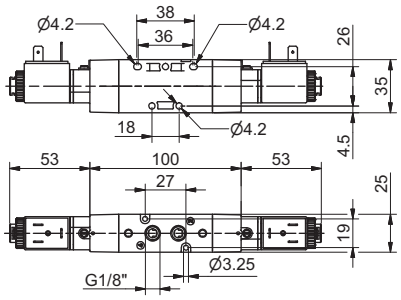

Operational characteristics — Shifting time of pneumatic directional control valves or moving parts, logic devices were measured in accordance to ISO 12238:2001

Fluid	Flow rate at 6 bar with Δp=1 (Nl/min)	Responce time according to ISO 12238, activation time (ms)	Responce time according to ISO 12238, deactivation time	Max working pressure (bar)	Orifice size (mm)	Working ports size	Temperature °C
Filtered and lubricated air	620	18,2	19,1	10	6	G1/8"	-5 ÷ +50

Solenoid - Solenoid (External feeding)

Ordering code

T488.32.0.0E.Ⓥ

	VOLTAGE
Ⓥ	M9=24V D.C. (rating power 2W)
	M11=24V D.C. (rating power 3,8W)
	M56=24V 50/60 Hz (starting power 9VA, rating power 6VA)
	M57=110 V 50/60 Hz (starting power 9VA, rating power 6VA)
	M58=230V 50/60Hz (starting power 9VA, rating power 6VA)

Weight gr. 250
Minimum working pressure 2 bar

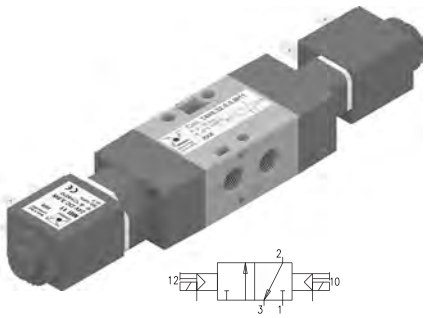

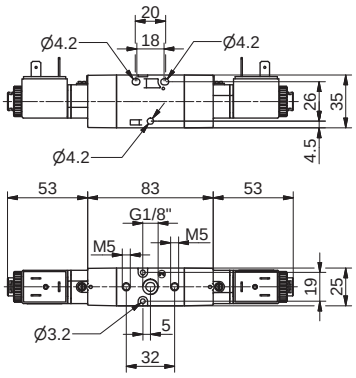

Operational characteristics — Shifting time of pneumatic directional control valves or moving parts, logic devices were measured in accordance to ISO 12238:2001

Fluid	Flow rate at 6 bar with Δp=1 (Nl/min)	Responce time according to ISO 12238, activation time (ms)	Responce time according to ISO 12238, deactivation time	Max working pressure (bar)	Orifice size (mm)	Working ports size	Pilot port size	Temperature °C
Filtered and lubricated air	620	18,8	18,0	10	6	G1/8"	M5	-5 ÷ +50

Solenoid - Solenoid (External feeding)

Ordering code

T488.52.0.0E.Ⓥ

	VOLTAGE
Ⓥ	M9=24V D.C. (rating power 2W)
	M11=24V D.C. (rating power 3,8W)
	M56=24V 50/60 Hz (starting power 9VA, rating power 6VA)
	M57=110 V 50/60 Hz (starting power 9VA, rating power 6VA)
	M58=230V 50/60Hz (starting power 9VA, rating power 6VA)

Weight gr. 290
Minimum working pressure 2 bar

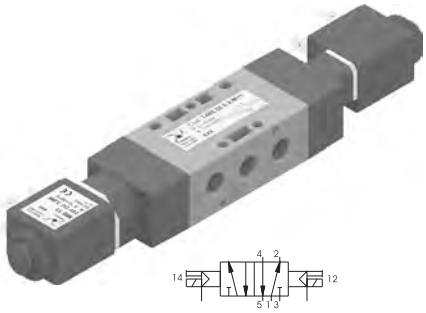

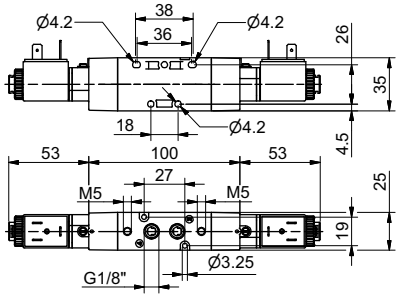

Operational characteristics — Shifting time of pneumatic directional control valves or moving parts, logic devices were measured in accordance to ISO 12238:2001

Fluid	Flow rate at 6 bar with Δp=1 (Nl/min)	Responce time according to ISO 12238, activation time (ms)	Responce time according to ISO 12238, deactivation time	Max working pressure (bar)	Orifice size (mm)	Working ports size	Pilot port size	Temperature °C
Filtered and lubricated air	620	18,2	19,1	10	6	G1/8"	M5	-5 ÷ +50

Solenoid - Solenoid / Closed centres (Self-feeding)

Ordering code

T488.53.31.0.0.Ⓥ

	VOLTAGE
	M9=24V D.C. (rating power 2W)
	M11=24V D.C. (rating power 3,8W)
	M56=24V 50/60 Hz (starting power 9VA, rating power 6VA)
Ⓥ	M57=110V 50/60Hz (starting power 9VA, rating power 6VA)
	M58=230V 50/60 Hz (starting power 9VA, rating power 6VA)

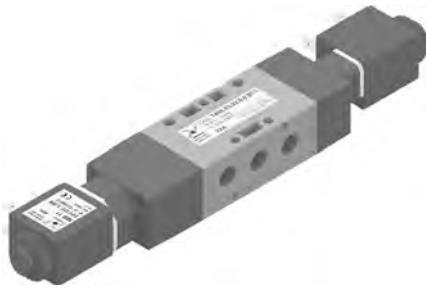

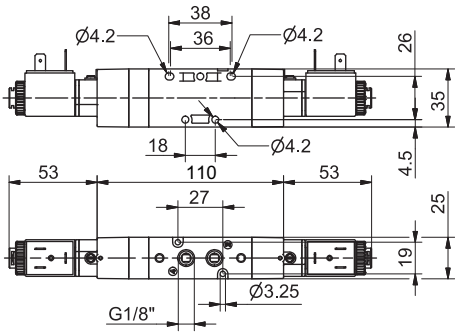

Weight gr. 330
Minimum working pressure 3 bar

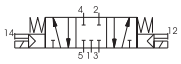

Operational characteristics — Shifting time of pneumatic directional control valves or moving parts, logic devices were measured in accordance to ISO 12238:2001

Fluid	Flow rate at 6 bar with Δp=1 (Nl/min)	Responce time according to ISO 12238, activation time (ms)	Responce time according to ISO 12238, deactivation time	Max working pressure (bar)	Orifice size (mm)	Working ports size	Temperature °C
Filtered and lubricated air	410	21,3	37,0	10	6	G1/8"	-5 ÷ +50

Solenoid - Solenoid / Open Centres (Self-feeding)

Ordering code

T488.53.32.0.0.Ⓥ

	VOLTAGE
	M9=24V D.C. (rating power 2W)
	M11=24V D.C. (rating power 3,8W)
	M56=24V 50/60 Hz (starting power 9VA, rating power 6VA)
Ⓥ	M57=110V 50/60Hz (starting power 9VA, rating power 6VA)
	M58=230V 50/60 Hz (starting power 9VA, rating power 6VA)

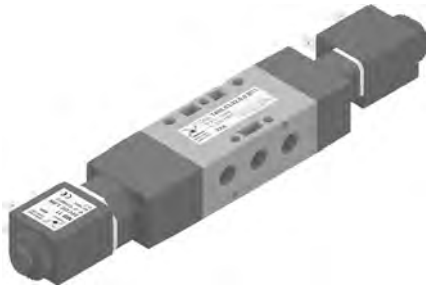

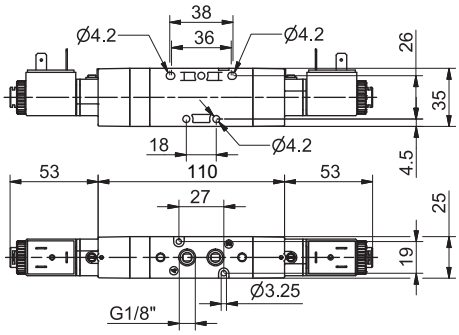

Weight gr. 330
Minimum working pressure 3 bar

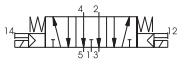

Operational characteristics — Shifting time of pneumatic directional control valves or moving parts, logic devices were measured in accordance to ISO 12238:2001

Fluid	Flow rate at 6 bar with Δp=1 (Nl/min)	Responce time according to ISO 12238, activation time (ms)	Responce time according to ISO 12238, deactivation time	Max working pressure (bar)	Orifice size (mm)	Working ports size	Temperature °C
Filtered and lubricated air	410	21,5	34,5	10	6	G1/8"	-5 ÷ +50

Solenoid - Solenoid / Pressured centres (Self-feeding)

Ordering code

T488.53.33.0.0.Ⓥ

	VOLTAGE
	M9=24V D.C. (rating power 2W)
	M11=24V D.C. (rating power 3,8W)
	M56=24V 50/60 Hz (starting power 9VA, rating power 6VA)
Ⓥ	M57=110V 50/60Hz (starting power 9VA, rating power 6VA)
	M58=230V 50/60 Hz (starting power 9VA, rating power 6VA)

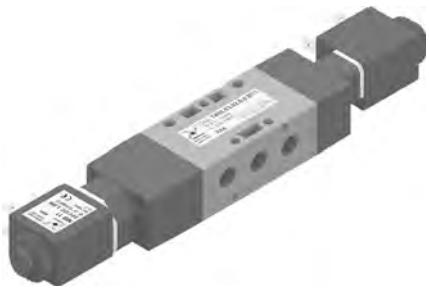

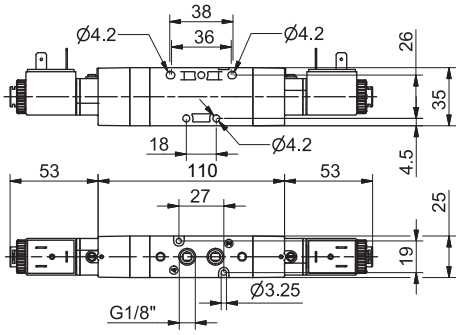

Weight gr. 330
Minimum working pressure 3 bar

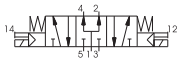

Operational characteristics — Shifting time of pneumatic directional control valves or moving parts, logic devices were measured in accordance to ISO 12238:2001

Fluid	Flow rate at 6 bar with Δp=1 (Nl/min)	Responce time according to ISO 12238, activation time (ms)	Responce time according to ISO 12238, deactivation time	Max working pressure (bar)	Orifice size (mm)	Working ports size	Temperature °C
Filtered and lubricated air	410	19,5	37,3	10	6	G1/8"	-5 ÷ +50

Solenoid - Solenoid / Closed centres (External feeding)

Ordering code

T488.53.31.0.0E.Ⓥ

	VOLTAGE
Ⓥ	M9=24V D.C. (rating power 2W)
	M11=24V D.C. (rating power 3,8W)
	M56=24V 50/60 Hz (starting power 9VA, rating power 6VA)
	M57=110V 50/60Hz (starting power 9VA, rating power 6VA)
	M58=230V 50/60 Hz (starting power 9VA, rating power 6VA)

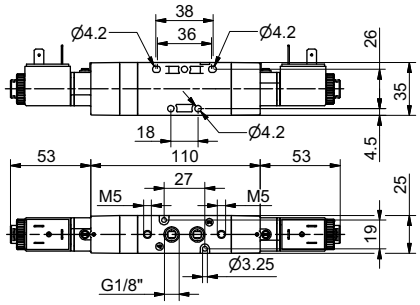

Weight gr. 330
Minimum working pressure 3 bar

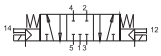

Operational characteristics Shifting time of pneumatic directional control valves or moving parts, logic devices were measured in accordance to ISO 12238:2001

Fluid	Flow rate at 6 bar with Δp=1 (Nl/min)	Responce time according to ISO 12238, activation time (ms)	Responce time according to ISO 12238, deactivation time	Max working pressure (bar)	Orifice size (mm)	Working ports size	Pilot port size	Temperature °C
Filtered and lubricated air	410	21,3	37,0	10	6	G1/8"	M5	-5 ÷ +50

Solenoid - Solenoid / Open Centres (External feeding)

Ordering code

T488.53.32.0.0E.Ⓥ

	VOLTAGE
Ⓥ	M9=24V D.C. (rating power 2W)
	M11=24V D.C. (rating power 3,8W)
	M56=24V 50/60 Hz (starting power 9VA, rating power 6VA)
	M57=110V 50/60Hz (starting power 9VA, rating power 6VA)
	M58=230V 50/60 Hz (starting power 9VA, rating power 6VA)

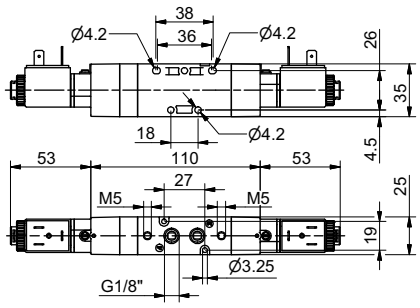

Weight gr. 330
Minimum working pressure 3 bar

Operational characteristics Shifting time of pneumatic directional control valves or moving parts, logic devices were measured in accordance to ISO 12238:2001

Fluid	Flow rate at 6 bar with Δp=1 (Nl/min)	Responce time according to ISO 12238, activation time (ms)	Responce time according to ISO 12238, deactivation time	Max working pressure (bar)	Orifice size (mm)	Working ports size	Pilot port size	Temperature °C
Filtered and lubricated air	410	21,5	34,5	10	6	G1/8"	M5	-5 ÷ +50

Solenoid - Solenoid / Pressured centres (External feeding)

Ordering code

T488.53.33.0.0E.Ⓥ

	VOLTAGE
Ⓥ	M9=24V D.C. (rating power 2W)
	M11=24V D.C. (rating power 3,8W)
	M56=24V 50/60 Hz (starting power 9VA, rating power 6VA)
	M57=110V 50/60Hz (starting power 9VA, rating power 6VA)
	M58=230V 50/60 Hz (starting power 9VA, rating power 6VA)

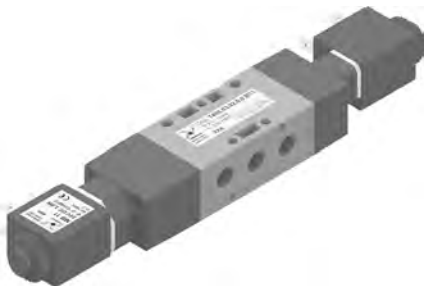

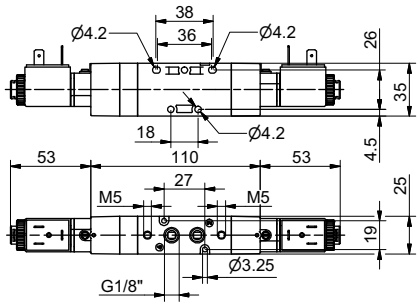

Weight gr. 330
Minimum working pressure 3 bar

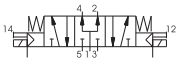

Operational characteristics Shifting time of pneumatic directional control valves or moving parts, logic devices were measured in accordance to ISO 12238:2001

Fluid	Flow rate at 6 bar with Δp=1 (Nl/min)	Responce time according to ISO 12238, activation time (ms)	Responce time according to ISO 12238, deactivation time	Max working pressure (bar)	Orifice size (mm)	Working ports size	Pilot port size	Temperature °C
Filtered and lubricated air	410	19,5	37,3	10	6	G1/8"	M5	-5 ÷ +50

Collectors

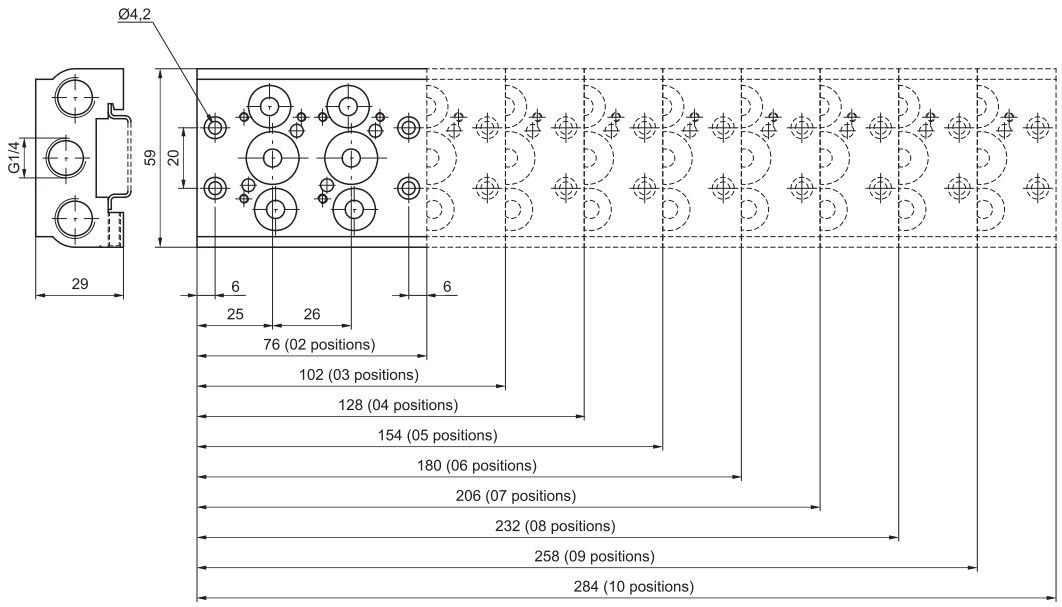

Ordering code

T488.Ⓟ

	N. POSITIONS
Ⓟ	02=2 pos. (Weight 220 gr.)
	03=3 pos. (Weight 290 gr.)
	04=4 pos. (Weight 360 gr.)
	05=5 pos. (Weight 430 gr.)
	06=6 pos. (Weight 500 gr.)
	07=7 pos. (Weight 570 gr.)
	08=8 pos. (Weight 640 gr.)
	09=9 pos. (Weight 710 gr.)
	10=10 pos. (Weight 780 gr.)

Modular collectors

Ordering code

T488.Ⓣ

	TYPE
Ⓣ	01=Single complete base
	01K=Complete modular bases (batches of 20 pieces)
	30K=Hollow bush, complete with O-rings (Nr. 50 pieces)
	31K=Blank bush, complete with O-rings (Nr. 50 pieces)
	32K =Intermediate air intake with screw (Nr. 5 pieces)
	33=Screw to suite solenoid valves (Nr. 50 pieces)
	34=Screw for joning bases (Nr. 50 pieces)
	35=Washer for screw for joning bases (Nr. 50 pieces)
	36=O-ring seal (Nr. 50 pieces)

Closing plate

Ordering code

T488.00

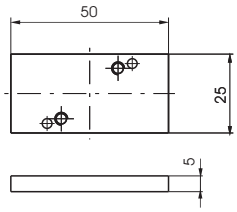

Weight gr. 25

Pneumatic - Pneumatic

5/3

Ordering code
808.53.Ⓣ.11.11

Ⓣ	TYPE
	31=Closed centres
	32=Open centres

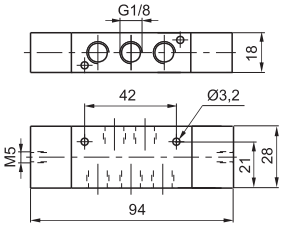

Weight gr. 125
Minimum piloting pressure 3 bar

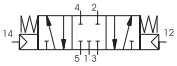

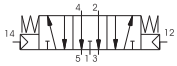

Operational characteristics

Fluid	Max working pressure (bar)	Temperature °C	Flow rate at 6 bar with Δp=1 (Nl/min)	Orifice size (mm)	Working ports size	Pilot ports size
Filtered and lubricated air	10 bar	-5 - +70	520 Nl/min	mm 4	G 1/8"	M5

3/2 Solenoid - Spring

Ordering code
808.Ⓣ.0.1.Ⓥ

Ⓣ	TYPE
	32=3 ways
	52=5 ways
Ⓥ	VOLTAGE
	01=12V D.C.
	02=24V D.C.
	05=24V A.C.
	06=110V A.C.
	07=230V A.C.

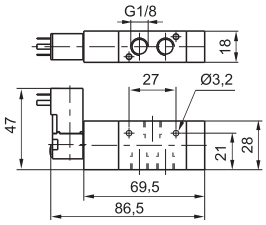

Weight gr. 130
Minimum working pressure 2 bar

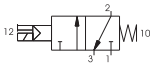

Solenoid - Spring 5/2

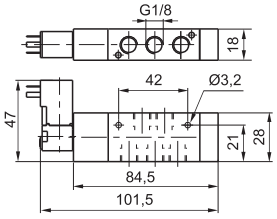

Weight gr. 135
Minimum working pressure 2 bar

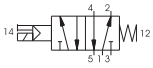

Operational characteristics

Fluid	Max working pressure (bar)	Temperature °C	Flow rate at 6 bar with Δp=1 (Nl/min)	Orifice size (mm)	Working ports size
Filtered and lubricated air	10 bar	-5 ÷ +50	520 Nl/min	mm 4	G 1/8"

3/2 Solenoid - Differential

Ordering code
808.Ⓣ.0.12.Ⓥ

Ⓣ	TYPE
	32=3 ways
	52=5 ways
Ⓥ	VOLTAGE
	01=12V D.C.
	02=24V D.C.
	05=24V A.C.
	06=110V A.C.
	07=230V A.C.

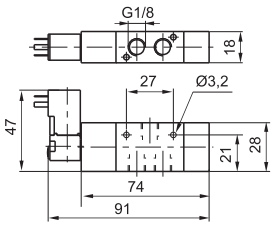

Weight gr. 140
Minimum working pressure 2 bar

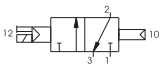

Solenoid - Differential 5/2

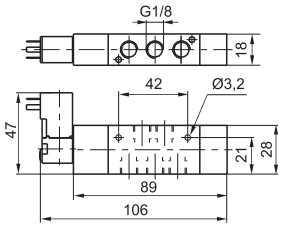

Weight gr. 145
Minimum working pressure 2 bar

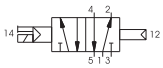

Operational characteristics

Fluid	Max working pressure (bar)	Temperature °C	Flow rate at 6 bar with Δp=1 (Nl/min)	Orifice size (mm)	Working ports size
Filtered and lubricated air	10 bar	-5 ÷ +50	520 Nl/min	mm 4	G 1/8"

3/2 **Solenoid - Solenoid**

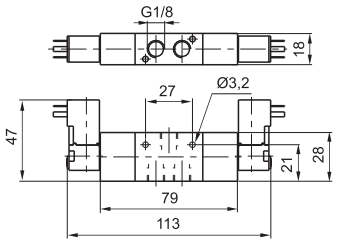

Weight gr. 185
Minimum working pressure 1,5 bar

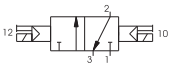

Ordering code

808.Ⓣ.0.0.Ⓥ

Ⓣ	TYPE
	32=3 ways
	52=5 ways
Ⓥ	VOLTAGE
	01=12V D.C.
	02=24V D.C.
	05=24V A.C.
	06=110V A.C.
	07=230V A.C.

Solenoid - Solenoid 5/2

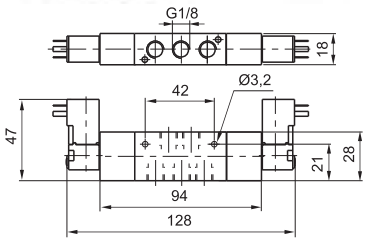

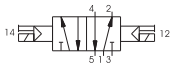

Weight gr. 190
Minimum working pressure 1,5 bar

Operational characteristics

Fluid	Max working pressure (bar)	Temperature °C	Flow rate at 6 bar with Δp=1 (Nl/min)	Orifice size (mm)	Working ports size
Filtered and lubricated air	10 bar	-5 ÷ +50	520 Nl/min	mm 4	G 1/8"

Solenoid - Solenoid 5/3

Ordering code

808.53.Ⓣ.0.0.Ⓥ

Ⓣ	TYPE
	31=Closed centres
	32=Open centres
Ⓥ	VOLTAGE
	01=12V D.C.
	02=24V D.C.
	05=24V A.C.
	06=110V A.C.
	07=230V A.C.

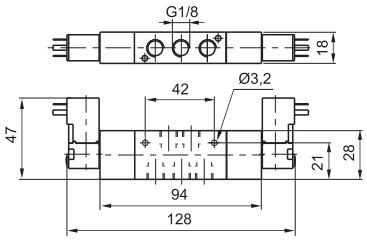

Weight gr. 190
Minimum working pressure 3 bar

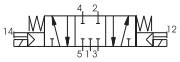

Operational characteristics

Fluid	Max working pressure (bar)	Temperature °C	Flow rate at 6 bar with Δp=1 (Nl/min)	Orifice size (mm)	Working ports size
Filtered and lubricated air	10 bar	-5 ÷ +50	520 Nl/min	mm 4	G 1/8"

Manifolds

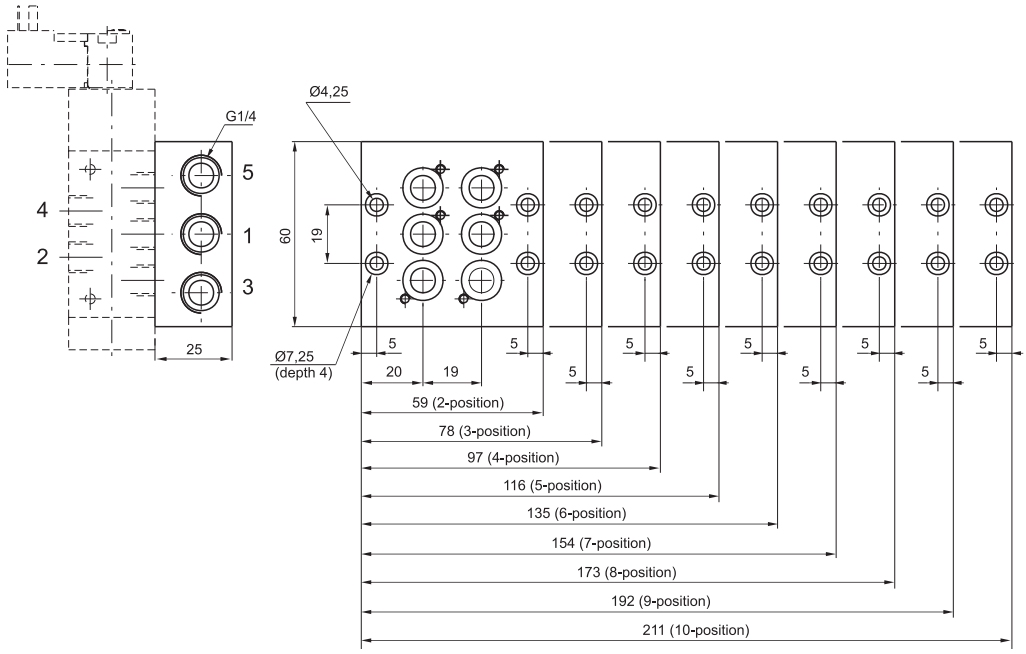

Ordering code
808.Ⓟ

	N. POSITIONS
Ⓟ	02=2 pos.(weight gr. 180)
	03=3 pos.(weight gr. 245)
	04=4 pos.(weight gr. 310)
	05=5 pos.(weight gr. 375)
	06=6 pos.(weight gr. 440)
	07=7 pos.(weight gr. 500)
	08=8 pos.(weight gr. 560)
	09=9 pos.(weight gr. 620)
	10=10 pos.(weight gr. 680)

Clip

Ordering code
800.00

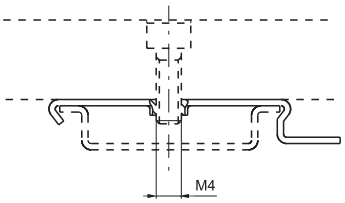

Closing Plate

Ordering code
808.00

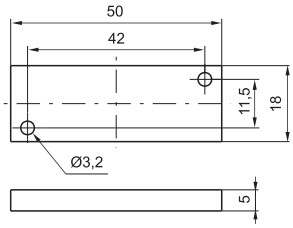

General

Competitively priced, good performance and versatility combined with a compact design are the main characteristics of this new series of valves. The aluminium valve body and spool/seal arrangement optimize both the flow rate and the valve switching time.
This new series of valves are available with G1/8" and G1/4" ports in 3/2, 5/2 and 5/3 versions. Monostable or bistable versions are available and include an integrated technopolymer solenoid operator with 9mm stem and built in manual override
The valves can be supplied with or without the solenoid coil, however, if the solenoid coil is required please refer to the following table:

Voltages		Coil Code	Voltage Code
Direct current DC	12V (3,5W)	**MF4**	**F04**
	24V (3,5W)	**MF5**	**F05**
Alternating current AC 50 Hz	24V (3,7W)	**MF56**	**F56**
	110V (3,7W)	**MF57**	**F57**
	230V (3,7W)	**MF58**	**F58**

Connectors Ordering codes		
Voltages		**Kit 100 pieces**
DC/AC	24V	**888.11.01L-K**
Alternating current AC 50 - 60 Hz	110V	**888.11.02L-K**
	230V	**888.11.03L-K**

Construction characteristics

Body	Aluminium
Operators	Technopolymer Aluminium for spring bottom plates
Spools	Aluminium
Seals	NBR
Pistons	Technopolymer
Springs	Spring steel

Use and maintenance

These valves have an average life of 15 million cycles depending on the application and air quality, filtered and lubricated air using specified lubricants will dramatically reduce the wear of the seals and ensures long and trouble free operation.
Please ensure that the valve is being used according with the manufacturers specification, such as air pressure and temperature and that exhaust ports 3 & 5 are protected against the possible ingress of dirt or debris.
Repair kits including the spool complete with seals are available for overhauling the valves; however, although this is a simple operation it should be carried out by a competent person.

Solenoid - Spring - 3/2 (Self-feeding)

Ordering code

8880.32.Ⓕ.39.Ⓥ

Ⓕ	FUNCTION
	A=Normally Open
	C=Normally Closed
Ⓥ	VOLTAGE
	F05=24 V DC
	F56=24 V (50-60 Hz)
	F57=110 V (50-60 Hz)
	F58=230V (50-60 Hz)
	F00=Without coil

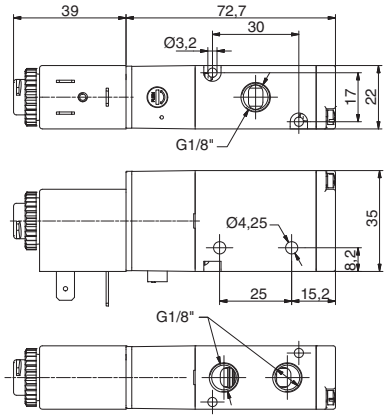

Weight gr. 210
Minimium working pressure 2 bar

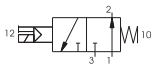

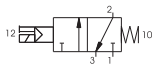

Operational characteristics

Fluid	Max working pressure (bar)	Temperature °C	Flow rate at 6 bar with Δp=1 (Nl/min)	Orifice size (mm)	Working port size
Filtered and lubricated air	8	-5 ÷ +50	790	5,8	G 1/8"

Solenoid - Spring - 5/2 (Self-feeding)

Ordering code

8880.52.00.39.Ⓥ

Ⓥ	VOLTAGE
	F05=24 V DC
	F56=24 V (50-60 Hz)
	F57=110 V (50-60 Hz)
	F58=230V (50-60 Hz)
	F00=Without coil

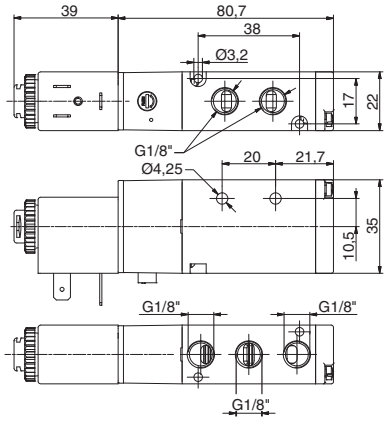

Weight gr. 220
Minimium working pressure 2 bar

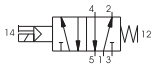

Operational characteristics

Fluid	Max working pressure (bar)	Temperature °C	Flow rate at 6 bar with Δp=1 (Nl/min)	Orifice size (mm)	Working port size
Filtered and lubricated air	8	-5 ÷ +50	790	5,8	G 1/8"

Solenoid - Solenoid - 3/2

Ordering code

8880.32.00.35.Ⓥ

Ⓥ	VOLTAGE
	F05=24 V DC
	F56=24 V (50-60 Hz)
	F57=110 V (50-60 Hz)
	F58=230V (50-60 Hz)
	F00=Without coil

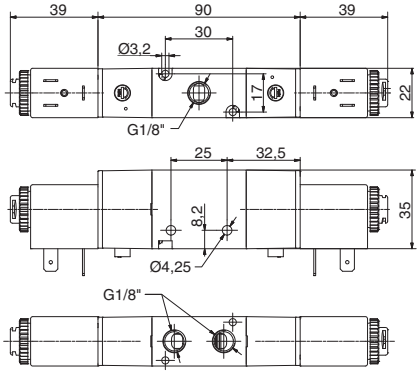

Weight gr. 310
Minimium working pressure 2 bar

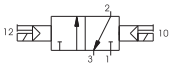

Operational characteristics

Fluid	Max working pressure (bar)	Temperature °C	Flow rate at 6 bar with Δp=1 (Nl/min)	Orifice size (mm)	Working port size
Filtered and lubricated air	8	-5 ÷ +50	790	5,8	G 1/8"

Solenoid - Solenoid - 5/2

Ordering code

8880.52.00.35.Ⓥ

	VOLTAGE
Ⓥ	F05=24 V DC
	F56=24 V (50-60 Hz)
	F57=110 V (50-60 Hz)
	F58=230V (50-60 Hz)
	F00=Without coil

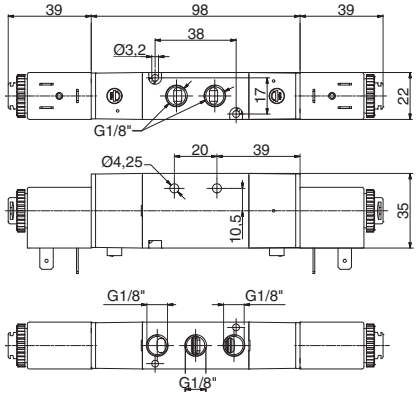

Weight gr. 320
Minimium working pressure 2 bar

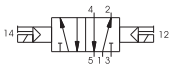

Operational characteristics

Fluid	Max working pressure (bar)	Temperature °C	Flow rate at 6 bar with Δp=1 (Nl/min)	Orifice size (mm)	Working port size
Filtered and lubricated air	8	-5 ÷ +50	790	5,8	G 1/8"

Solenoid - Solenoid - 5/3

Ordering code

8880.53.Ⓕ.35.Ⓥ

	FUNCTION
Ⓕ	31=Closed centres
	32=Open centres
	33=Pressured centres
	VOLTAGE
Ⓥ	F05=24 V DC
	F56=24 V (50-60 Hz)
	F57=110 V (50-60 Hz)
	F58=230V (50-60 Hz)
	F00=Without coil

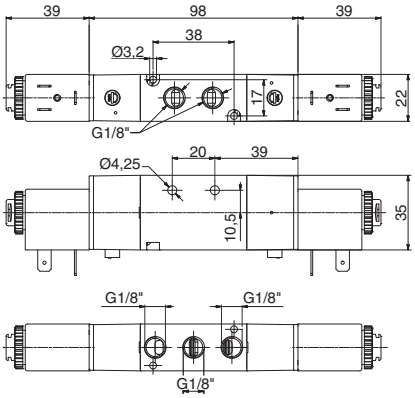

Weight gr. 330
Minimium working pressure 2,5 bar

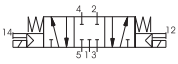

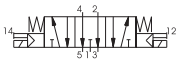

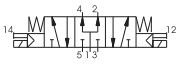

Operational characteristics

Fluid	Max working pressure (bar)	Temperature °C	Flow rate at 6 bar with Δp=1 (Nl/min)	Orifice size (mm)	Working port size
Filtered and lubricated air	8	-5 ÷ +50	440	5,8	G 1/8"

Solenoid - Spring - 3/2 (Self-feeding)

Ordering code	
888E.32.Ⓕ.39.Ⓥ	
Ⓕ	FUNZIONE
	A=3/2 Normalmente Aperta
	C=3/2 Normalmente Chiusa
Ⓥ	VOLTAGE
	F04=12 V DC
	F05=24 V DC
	F56=24 V (50-60 Hz)
	F57=110 V (50-60 Hz)
	F58=230 V (50-60 Hz)
	F00=Senza bobina

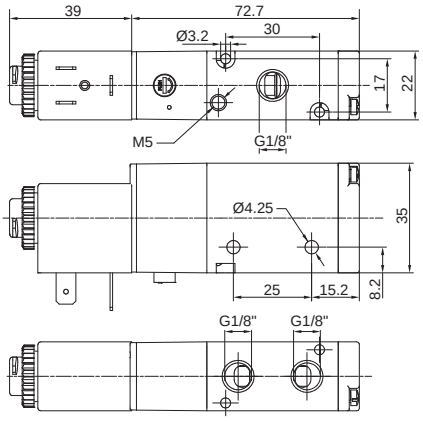

Weight gr. 210
Minimium working pressure 2 bar

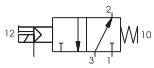

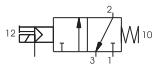

Operational characteristics

Fluid	Max working pressure (bar)	Temperature °C	Flow rate at 6 bar with Δp=1 (Nl/min)	Orifice size (mm)	Working port size
Filtered and lubricated air	8	-5 ÷ +50	790	5,8	G 1/8"

Solenoid - Spring - 5/2 (Self-feeding)

Ordering code	
888E.52.00.39.Ⓥ	
Ⓥ	VOLTAGE
	F04=12 V DC
	F05=24 V DC
	F56=24 V (50-60 Hz)
	F57=110 V (50-60 Hz)
	F58=230 V (50-60 Hz)
	F00=Senza bobina

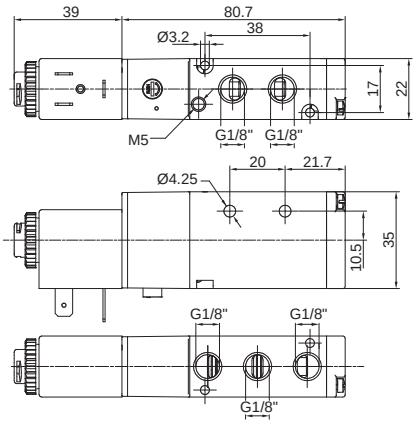

Weight gr. 220
Minimium working pressure 2 bar

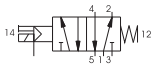

Operational characteristics

Fluid	Max working pressure (bar)	Temperature °C	Flow rate at 6 bar with Δp=1 (Nl/min)	Orifice size (mm)	Working port size
Filtered and lubricated air	8	-5 ÷ +50	790	5,8	G 1/8"

Solenoid - Solenoid - 3/2 (External-feeding)

Ordering code	
888E.32.00.35.Ⓥ	
Ⓥ	VOLTAGE
	F04=12 V DC
	F05=24 V DC
	F56=24 V (50-60 Hz)
	F57=110 V (50-60 Hz)
	F58=230 V (50-60 Hz)
	F00=Senza bobina

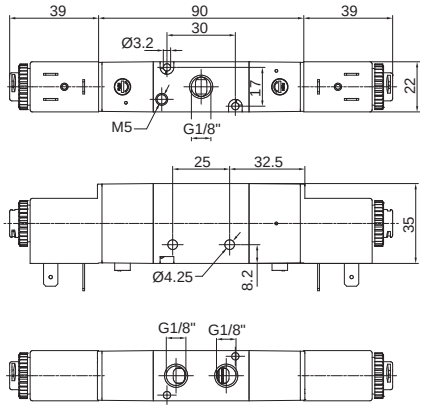

Weight gr. 310
Minimium working pressure 2 bar

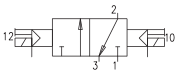

Operational characteristics

Fluid	Max working pressure (bar)	Temperature °C	Flow rate at 6 bar with Δp=1 (Nl/min)	Orifice size (mm)	Working port size
Filtered and lubricated air	8	-5 ÷ +50	790	5,8	G 1/8"

Solenoid - Solenoid - 5/2 (External-feeding)

Ordering code

888E.52.00.35.Ⓥ

	VOLTAGE
	F04=12 V DC
	F05=24 V DC
Ⓥ	F56=24 V (50-60 Hz)
	F57=110 V (50-60 Hz)
	F58=230 V (50-60 Hz)
	F00=Senza bobina

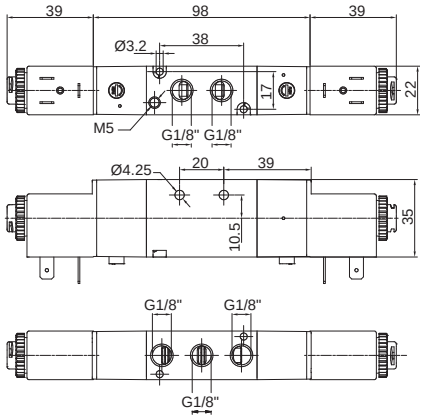

Weight gr. 320
Minimium working pressure 2 bar

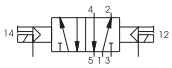

Operational characteristics

Fluid	Max working pressure (bar)	Temperature °C	Flow rate at 6 bar with Δp=1 (Nl/min)	Orifice size (mm)	Working port size
Filtered and lubricated air	8	-5 ÷ +50	790	5,8	G 1/8"

Solenoid - Solenoid - 5/3 (External-feeding)

Ordering code

888E.53.Ⓕ.35.Ⓥ

	FUNZIONE
Ⓕ	31=Closed centres
	32=Open centres
	33=Pressured centres
	VOLTAGEpos.
	F04=12 V DC
	F05=24 V DC
Ⓥ	F56=24 V (50-60 Hz)
	F57=110 V (50-60 Hz)
	F58=230 V (50-60 Hz)
	F00=Senza bobina

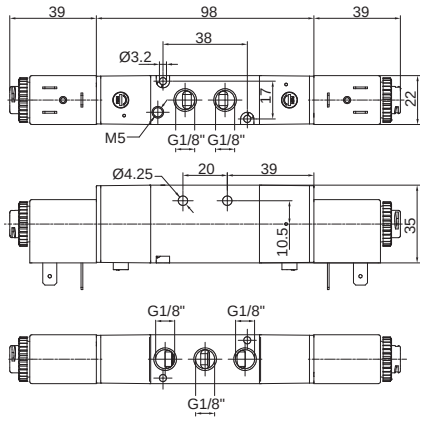

Weight gr. 330
Minimium working pressure 2,5 bar

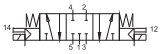

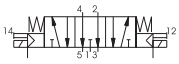

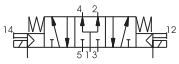

Operational characteristics

Fluid	Max working pressure (bar)	Temperature °C	Flow rate at 6 bar with Δp=1 (Nl/min)	Orifice size (mm)	Working port size
Filtered and lubricated air	8	-5 ÷ +50	440	5,8	G 1/8"

Solenoid - Spring - 3/2 (Self-feeding)

Ordering code

8884.32.Ⓕ.39.Ⓥ

Ⓕ	FUNCTION
	A=Normally Open
	C=Normally Closed
Ⓥ	VOLTAGE
	F05=24 V DC
	F56=24 V (50-60 Hz)
	F57=110 V (50-60 Hz)
	F58=230V (50-60 Hz)
	F00=Without coil

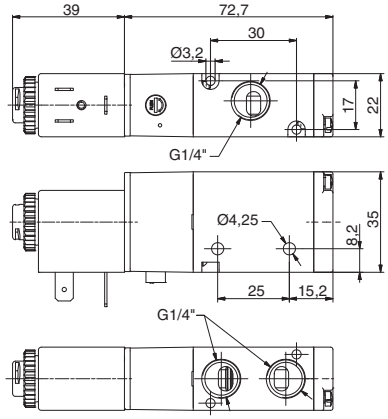

Weight gr. 210
Minimium working pressure 2 bar

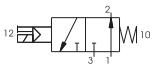

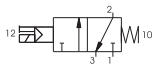

Operational characteristics

Fluid	Max working pressure (bar)	Temperature °C	Flow rate at 6 bar with Δp=1 (Nl/min)	Orifice size (mm)	Working port size
Filtered and lubricated air	8	-5 ÷ +50	890	6,5	G 1/4"

Solenoid - Spring - 5/2 (Self-feeding)

Ordering code

8884.52.00.39.Ⓥ

Ⓥ	VOLTAGE
	F05=24 V DC
	F56=24 V (50-60 Hz)
	F57=110 V (50-60 Hz)
	F58=230V (50-60 Hz)
	F00=Without coil

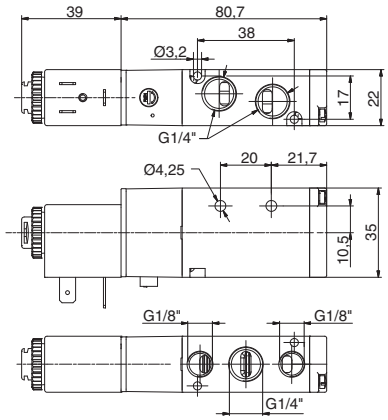

Weight gr. 220
Minimium working pressure 2 bar

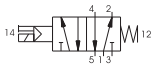

Operational characteristics

Fluid	Max working pressure (bar)	Temperature °C	Flow rate at 6 bar with Δp=1 (Nl/min)	Orifice size (mm)	Working port size
Filtered and lubricated air	8	-5 ÷ +50	890	6,5	G 1/4"

Solenoid - Solenoid - 3/2

Ordering code

8884.32.00.35.Ⓥ

Ⓥ	VOLTAGE
	F05=24 V DC
	F56=24 V (50-60 Hz)
	F57=110 V (50-60 Hz)
	F58=230V (50-60 Hz)
	F00=Without coil

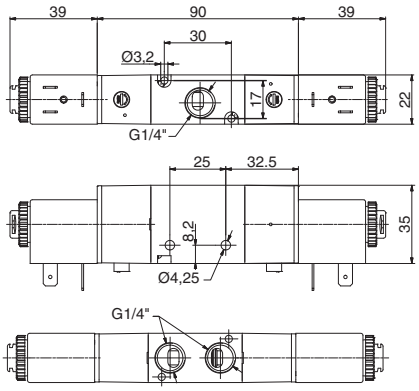

Weight gr. 310
Minimium working pressure 2 bar

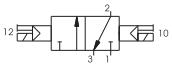

Operational characteristics

Fluid	Max working pressure (bar)	Temperature °C	Flow rate at 6 bar with Δp=1 (Nl/min)	Orifice size (mm)	Working port size
Filtered and lubricated air	8	-5 ÷ +50	890	6,5	G 1/4"

Solenoid - Solenoid - 5/2

Ordering code	
8884.52.00.35.Ⓥ	
Ⓥ	VOLTAGE
	F05=24 V DC
	F56=24 V (50-60 Hz)
	F57=110 V (50-60 Hz)
	F58=230V (50-60 Hz)
	F00=Without coil

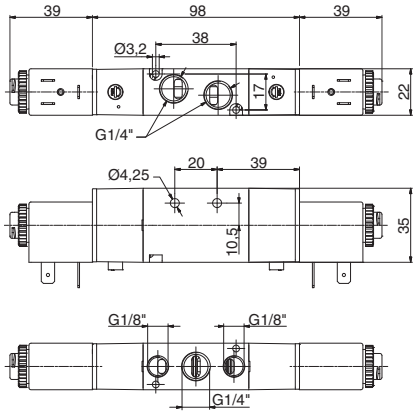

Weight gr. 320
Minimium working pressure 2 bar

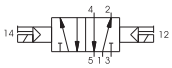

Operational characteristics

Fluid	Max working pressure (bar)	Temperature °C	Flow rate at 6 bar with Δp=1 (Nl/min)	Orifice size (mm)	Working port size
Filtered and lubricated air	8	-5 ÷ +50	890	6,5	G 1/4"

Solenoid - Solenoid - 5/3

Ordering code	
8884.53.Ⓕ.35.Ⓥ	
Ⓕ	FUNCTION
	31=Closed centres
	32=Open centres
	33=Pressured centres
Ⓥ	VOLTAGE
	F05=24 V DC
	F56=24 V (50-60 Hz)
	F57=110 V (50-60 Hz)
	F58=230V (50-60 Hz)
	F00=Without coil

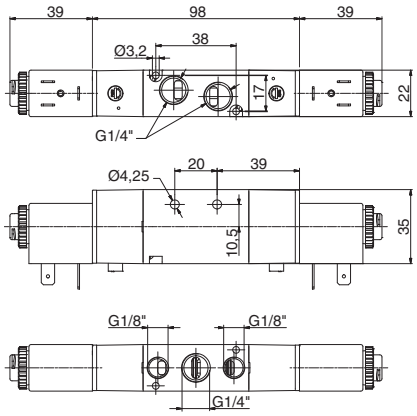

Weight gr. 330
Minimium working pressure 2,5 bar

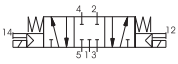

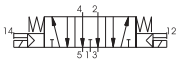

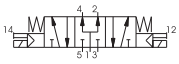

Operational characteristics

Fluid	Max working pressure (bar)	Temperature °C	Flow rate at 6 bar with Δp=1 (Nl/min)	Orifice size (mm)	Working port size
Filtered and lubricated air	8	-5 ÷ +50	540	6,5	G 1/4"

Manifold (Valves 5/2 - 5/3)

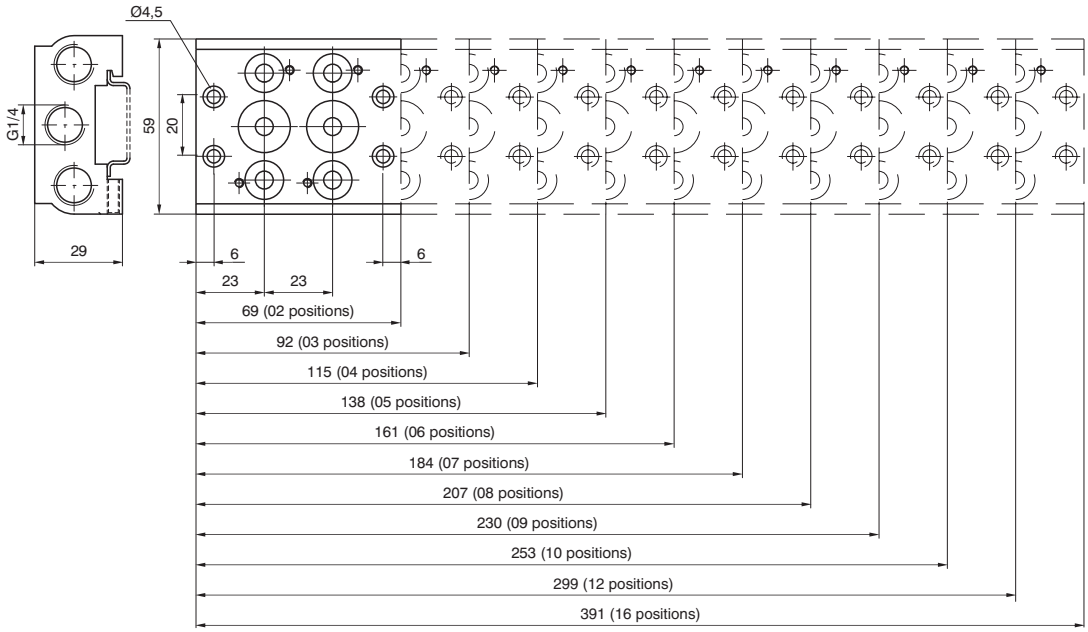

Ordering code

888.Ⓟ

	N. POSITIONS
Ⓟ	02=nr. 2 pos. (270 gr)
	03=nr. 3 pos. (335 gr)
	04=nr. 4 pos. (400 gr)
	05=nr. 5 pos. (465 gr)
	06=nr. 6 pos. (530 gr)
	07=nr. 7 pos. (595 gr)
	08=nr. 8 pos. (660 gr)
	09=nr. 9 pos. (725 gr)
	10=nr. 10 pos. (790 gr)
	12=nr. 12 pos. (920 gr)
	16=nr. 16 pos. (1180 gr)

Manifold supplied complete with Seals, Valve fixing screws and DIN rail fixing pin

Closing plate

Ordering code

888.00

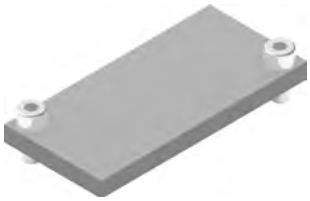

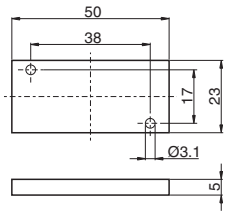

Weight gr. 18
Closing plate supplied complete with 2 fixing screws to the manifold and 2 fixing screws to the multi-polar base

Manifold (Valves 3/2)

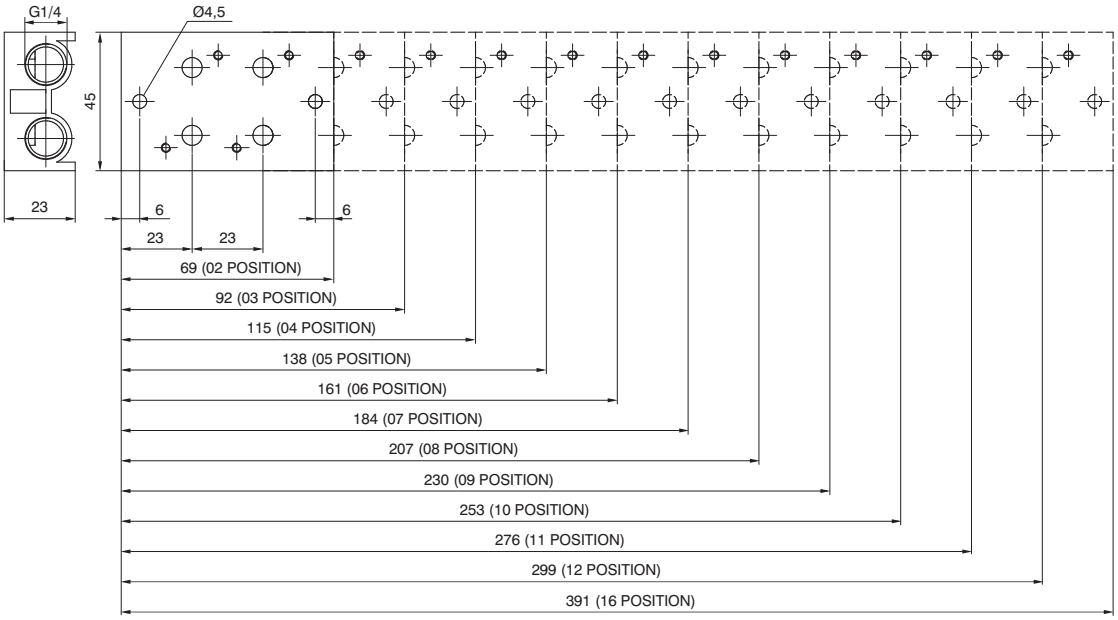

Ordering code

8883.P

	POSIZIONE
	02=nr. 2 pos. (112 gr)
	03=nr. 3 pos. (149 gr)
	04=nr. 4 pos. (186 gr)
	05=nr. 5 pos. (223 gr)
P	06=nr. 6 pos. (260 gr)
	07=nr. 7 pos. (297 gr)
	08=nr. 8 pos. (334 gr)
	09=nr. 9 pos. (371 gr)
	10=nr. 10 pos. (408 gr)
	12=nr. 12 pos. (482 gr)
	16=nr. 16 pos. (630 gr)

Manifold supplied complete with Seals and Valve fixing screws.

Closing plate

Ordering code

8883.00

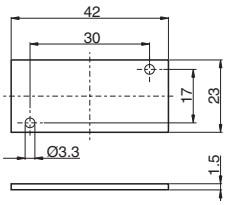

Weight gr. 10 - Closing plate supplied complete with 2 fixing screws to the manifold

Endplate, 37 Poles IP65

Ordering code
888M.37.10

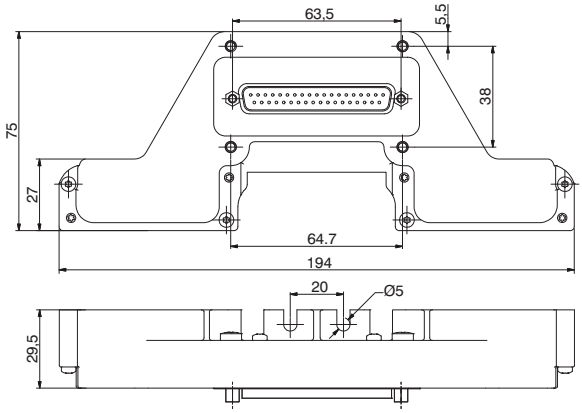

Weight gr. 186
The IP65 protection is obtained by IP65 Pneumax cable
Code complete with assembled endplate and 4 manifold fixing screws, previously mounted on the Manifold.

Endplate, 25 Poles IP65

Ordering code
888M.25.10

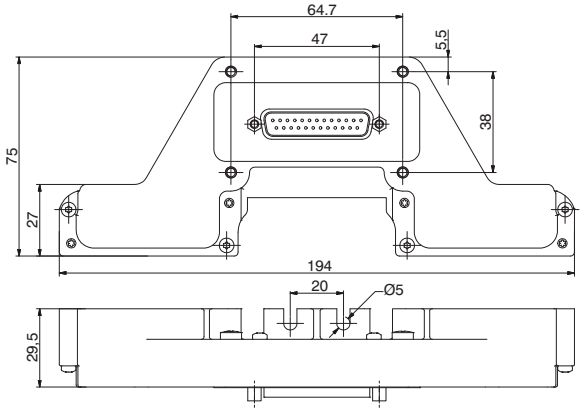

Weight gr. 181
The IP65 protection is obtained by IP65 Pneumax cable
Code complete with assembled endplate and 4 manifold fixing screws, previously mounted on the Manifold.

Modular base, 2 positions IP65

Ordering code
888M.02.BM

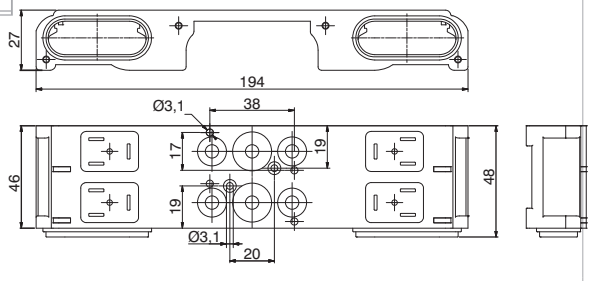

Weight gr. 220
Complete with seals and fixing screws
Usable only for 5/2 and 5/3 Distributors

Left and Right Power board PNP 24 VDC

Ordering code
888M.Ⓟ.Ⓣ

Ⓟ	N. POSITIONS
	04=nr. 4 pos. (11,2 gr.)
	08=nr. 8 pos. (22,4 gr.)
	12=nr. 12 pos. (33,6 gr.)
	16=nr. 16 pos. (44,8 gr.)
Ⓣ	TYPE
	00=Left side
	01=Right side

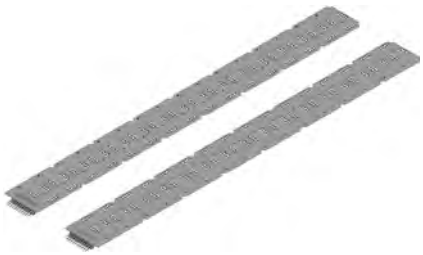

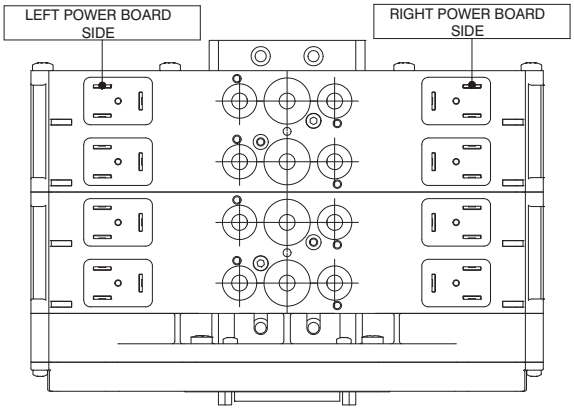

The IP65 protection degree is guarantees if assembled by Pneumax

2

Closing plate

Ordering code
888M.22.PC

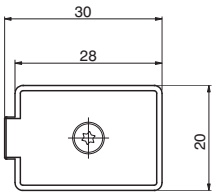

Weight gr. 3
Closing plate supplied complete with 1 Seal and fixing screw with O ring

Multipolar base plug

Ordering code
888M.T

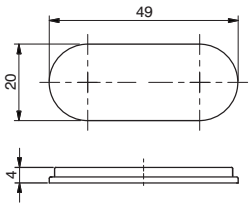

Weight gr. 2,6
Complete with: Nr. 1 Plug, Nr. 2 Fixing screws

Seals

Ordering code
888M.22.G

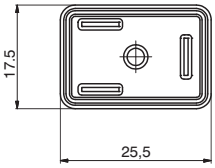

Weight gr. 0,52

In line cable complete with connector IP40

Ordering code
2400.T.L.00

T	CONNECTORS
	25=25 poles
	37=37 poles
L	CABLE LENGHT
	03=3 meters
	05=5 meters
	10=10 meters

Cable complete with connector, 25 Poles IP65

Ordering code
2300.25.L.C

L	CABLE LENGHT
	03=3 meters
	05=5 meters
	10=10 meters
C	CONNECTORS
	10=In line
	90=90° Angle

Cable complete with connector, 37 Poles IP65

Ordering code
2400.37.L.C

L	CABLE LENGHT
	03=3 meters
	05=5 meters
	10=10 meters
C	CONNECTORS
	10=In line
	90=90° Angle

Manifold layout Configuration Point to Point

V22 | **P (point to point)** | **_** | **...**

Nr. POSITIONS:

A = 02 positions
B = 03 positions
C = 04 positions
D = 05 positions
E = 06 positions
F = 07 positions
G = 08 positions
H = 09 positions
I = 10 positions
M = 12 positions
Q = 16 positions

SHORT CODE FUNCTION / CONNECTION :

A1= EV 5/2 SOL. - SPRING G1/8"
A2= EV 5/2 SOL. - SPRING G1/4"
B1= EV 5/2 SOL. - SOL. G1/8"
B2= EV 5/2 SOL. - SOL. G1/4"
C1= EV 5/3 CC SOL. - SOL. G1/8"
C2= EV 5/3 CC SOL. - SOL. G1/4"
C3= EV 5/3 OC SOL.-SOL. G1/8"
C4= EV 5/3 OC SOL.-SOL. G1/4"
C5= EV 5/3 PC SOL.-SOL. G1/8"
C6= EV 5/3 PC SOL.-SOL. G1/4"
T3= VALVE SPACE PLUG

Manifold layout Configuration Multi-pole

V22 | **M (Multi-pole)** | **_ _** | **_** | **_** | **...**

LEFT ENDPLATES

P2 = 25 poles (max. 11 Ev.)
P3 = 37 poles (max. 16 Ev.)

LEFT BOARD SIGNALS

C = 04 positions
G = 08 positions
M = 12 positions
Q = 16 positions

RIGHT BOARD SIGNALS

C = 04 positons
G = 08 positons
M = 12 positons
Q = 16 positons
00= no board

SHORT CODE FUNCTION / CONNECTION :

A1= EV 5/2 SOL. - SPRING G1/8"
A2= EV 5/2 SOL. - SPRING G1/4"
B1= EV 5/2 SOL. - SOL. G1/8"
B2= EV 5/2 SOL. - SOL. G1/4"
C1= EV 5/3 CC SOL. - SOL. G1/8"
C2= EV 5/3 CC SOL. - SOL. G1/4"
C3= EV 5/3 OC SOL.-SOL. G1/8"
C4= EV 5/3 OC SOL.-SOL. G1/4"
C5= EV 5/3 PC SOL.-SOL. G1/8"
C6= EV 5/3 PC SOL.-SOL. G1/4"
T1= VALVE SPACE PLUG
+ Nr. 2 ELECTRICAL SPACE PLUGS

Serial manifold layout (for the serial system node, see the Optyma-F Series)

V22 | **S (Serial)** | **_ _** – **_ _** | **_** | **_** | **...**

INPUT MODULE

D1 = 8IN DIGITAL MODULE M8
D2 = 16IN DIGITAL MODULE SUB-D 25 P
T1 = 2IN ANALOG MODULE 0-5 V
T2 = 2IN ANALOG MODULE 0-10 V
C1 = 2IN ANALOG MODULE 0-20 mA
C2 = 2IN ANALOG MODULE 4-20 mA

SERIAL NODE

C3 = CANopen® 32 OUT - 32IN
D3 = DeviceNet 32 OUT - 32IN
P3 = PROFIBUS 32 OUT - 64IN
E3 = EtherCAT® 32 OUT - 32IN
II3 = EtherNet / IP 32 OUT - 64IN
N3 = PROFINET IO RT/IRT 32 OUT - 64IN

LEFT BOARD SIGNALS

C = 04 positions
G = 08 positions
M = 12 positions
Q = 16 positions

RIGHT BOARD SIGNALS

C = 04 positions
G = 08 positions
M = 12 positions
Q = 16 positions
00= no board

SHORT CODE FUNCTION / CONNECTION :

A1= EV 5/2 SOL. - SPRING G1/8"
A2= EV 5/2 SOL. - SPRING G1/4"
B1= EV 5/2 SOL. - SOL. G1/8"
B2= EV 5/2 SOL. - SOL. G1/4"
C1= EV 5/3 CC SOL. - SOL. G1/8"
C2= EV 5/3 CC SOL. - SOL. G1/4"
C3= EV 5/3 OC SOL.-SOL. G1/8"
C4= EV 5/3 OC SOL.-SOL. G1/4"
C5= EV 5/3 PC SOL.-SOL. G1/8"
C6= EV 5/3 PC SOL.-SOL. G1/4"
T1= VALVE SPACE PLUG
+ Nr. 2 ELECTRICAL SPACE PLUGS

NOTE:
When constructing the configuration, please consider that the maximum number of valves that can be mounted on the manifold is 16, regardless of the valve type. Any valve position presents two electrical connections: in case of use of monostable valves(A1-A2) it will be necessary to assemble a plug to protect the unused electrical connection.
The correspondence between the electrical signal and its location on the manifold is showed in the following diagrams.

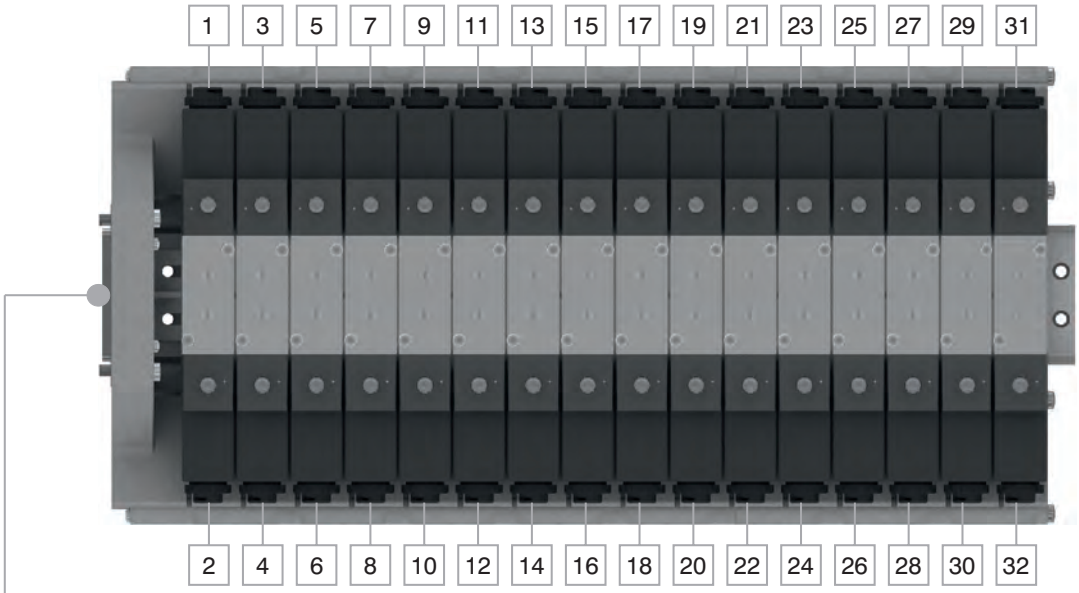

Connector 25 Poles from 1 to 11
Positions E.V. Bistable / Monostable

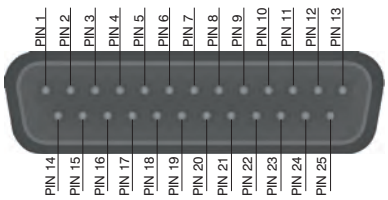

1 - 22 = SIGNALS
23 - 24 = GND
25 = NC

Connector 37 Poles from 1 to 16
Positions E.V. Bistable / Monostable

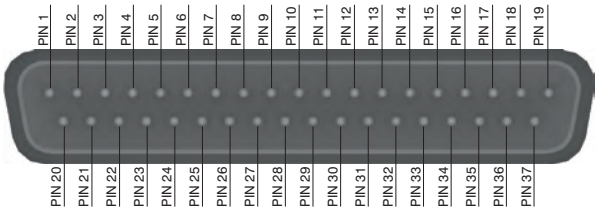

1 - 32 = SIGNALS
33 - 35 = GND
36 - 37 = NC

Assembly sequence

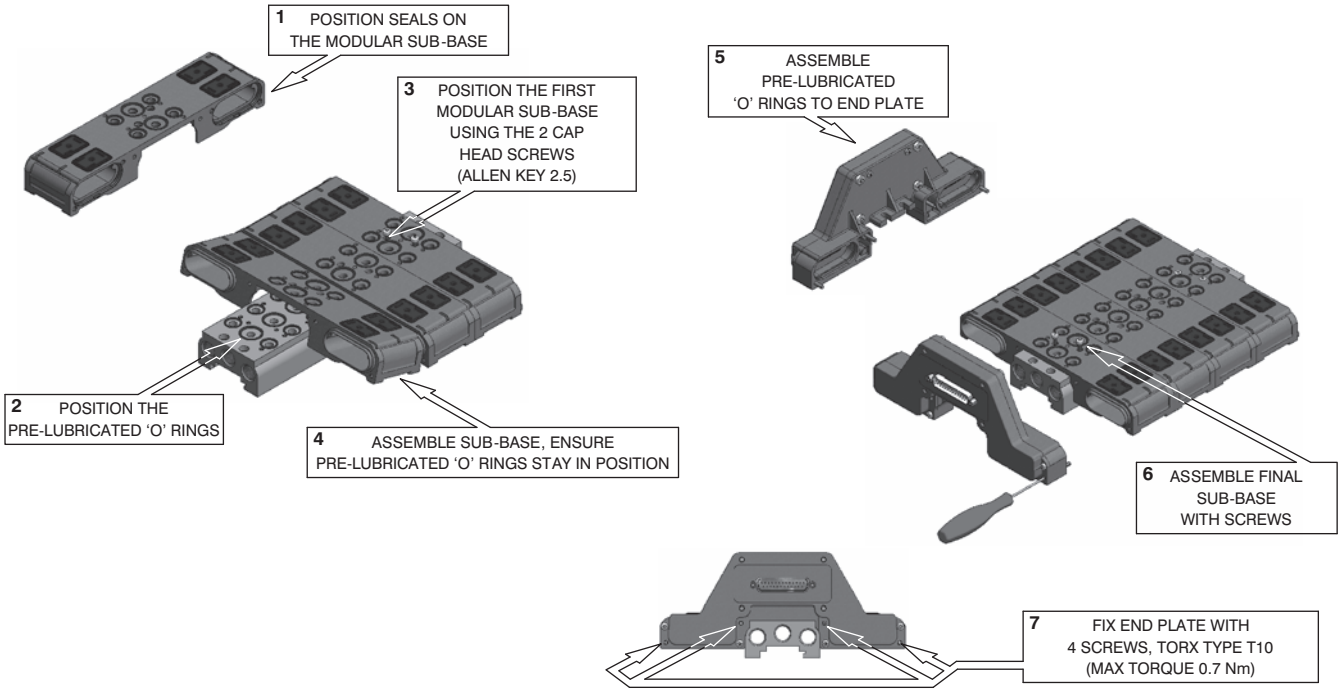

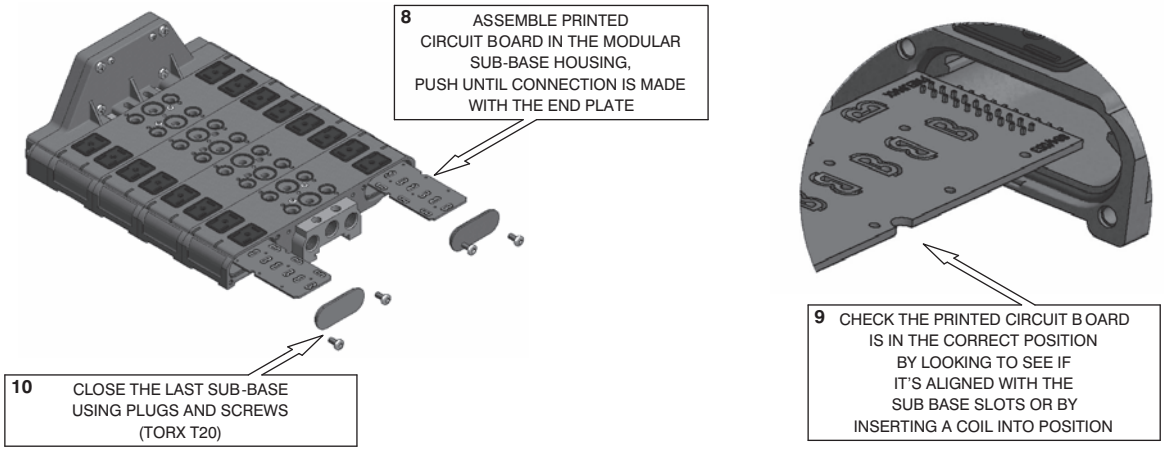

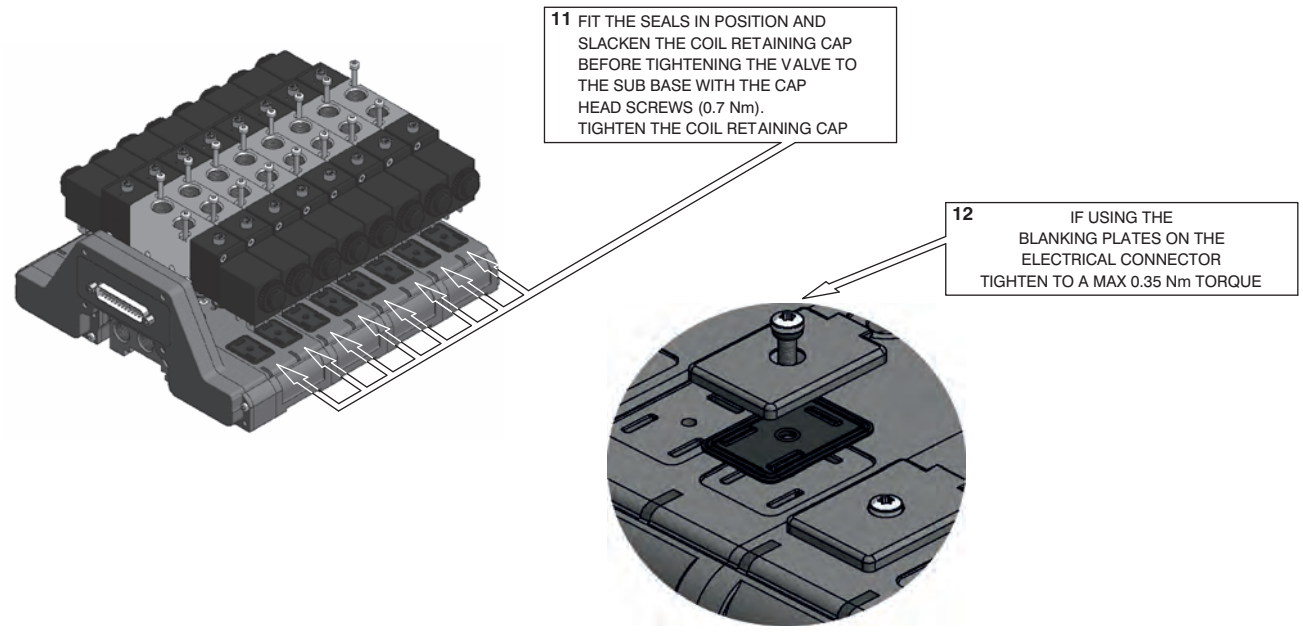

2

Solenoid - Spring

3/2 | Ordering code | 5/2

464.Ⓣ.0.1.M2

	TYPE
Ⓣ	32=3 ways
	52=5 ways

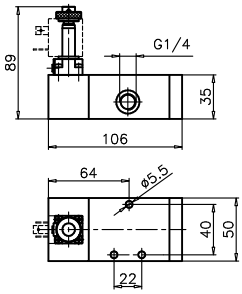

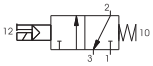

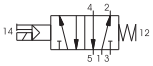

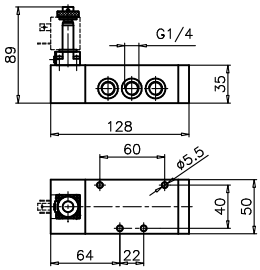

Weight gr. 530
Minimum working pressure 2,5 bar

Weight gr. 625
Minimum working pressure 2,5 bar

Operational characteristics

Fluid	Max working pressure (bar)	Temperature °C	Flow rate at 6 bar with Δp=1 (Nl/min)	Orifice size (mm)	Working ports size
Filtered and lubricated air	10	-5 ÷ +50	1360 Nl/min	mm 8	G 1/4"

Solenoid - Differential

3/2 | Ordering code | 5/2

464.Ⓣ.0.12.M2

	TYPE
Ⓣ	32=3 ways
	52=5 ways

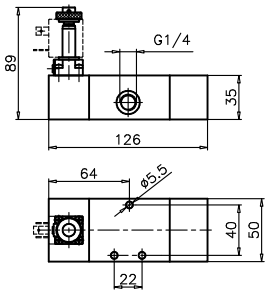

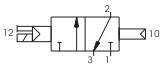

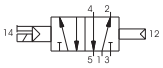

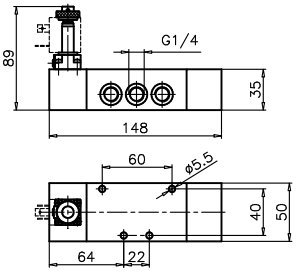

Weight gr. 650
Minimum working pressure 2,5 bar

Weight gr. 740
Minimum working pressure 2,5 bar

Operational characteristics

Fluid	Max working pressure (bar)	Temperature °C	Flow rate at 6 bar with Δp=1 (Nl/min)	Orifice size (mm)	Working ports size
Filtered and lubricated air	10	-5 ÷ +50	1360 Nl/min	mm 8	G 1/4"

Solenoid - Solenoid

3/2 | Ordering code | 5/2

464.Ⓣ.0.0.M2

	TYPE
Ⓣ	32=3 ways
	52=5 ways

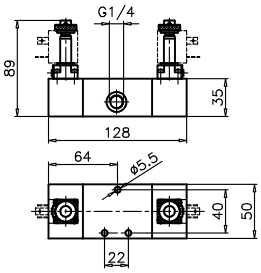

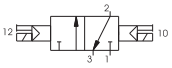

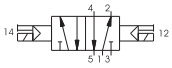

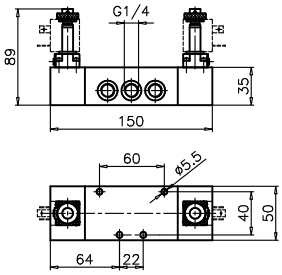

Weight gr. 730
Minimum working pressure 2 bar

Weight gr. 820
Minimum working pressure 2bar

Operational characteristics

Fluid	Max working pressure (bar)	Temperature °C	Flow rate at 6 bar with Δp=1 (Nl/min)	Orifice size (mm)	Working ports size
Filtered and lubricated air	10	-5 ÷ +50	1360 Nl/min	mm 8	G 1/4"

Solenoid - Solenoid

5/3

Ordering code
464.53.Ⓕ.0.0.M2

	FUNCTION
Ⓕ	31=Closed centres
	32=Open centres
	33=Pressured centres

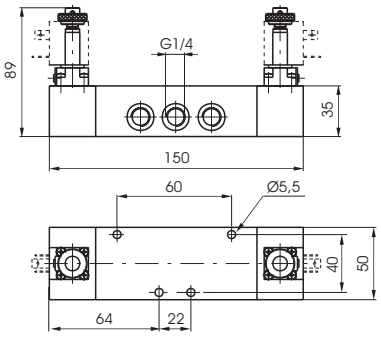

Weight gr. 820
Minimum working pressure 3 bar

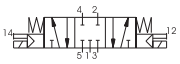

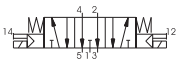

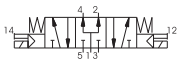

Operational characteristics

Fluid	Max working pressure (bar)	Temperature °C	Flow rate at 6 bar with Δp=1 (Nl/min)	Orifice size (mm)	Working ports size
Filtered and lubricated air	10	-5 ÷ +50	1280 Nl/min	mm 8	G 1/4"

3/2 Solenoid - Spring

Ordering code
464/1.Ⓣ.0.1.M2

	TYPE
Ⓣ	32=3 ways
	52=5 ways

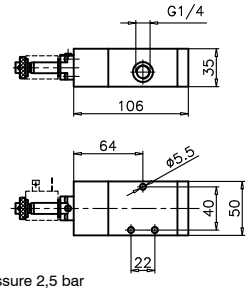

Weight gr. 530
Minimum working pressure 2,5 bar

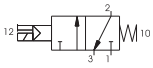

Solenoid - Spring 5/2

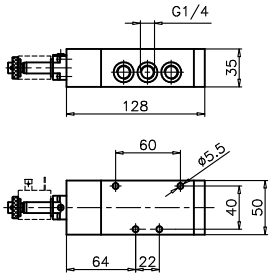

Weight gr. 625
Minimum working pressure 2,5 bar

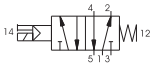

Operational characteristics

Fluid	Max working pressure (bar)	Temperature °C	Flow rate at 6 bar with Δp=1 (Nl/min)	Orifice size (mm)	Working ports size
Filtered and lubricated air	10 bar	-5 ÷ +50	1360 Nl/min	mm 8	G 1/4"

3/2 Solenoid - Differential

Ordering code
464/1.Ⓣ.0.12.M2

	TYPE
Ⓣ	32=3 ways
	52=5 ways

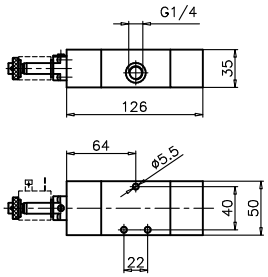

Weight gr. 650
Minimum working pressure 2,5 bar

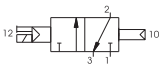

Solenoid - Differential 5/2

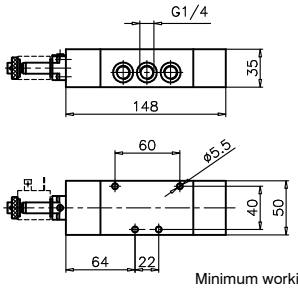

Weight gr. 740
Minimum working pressure 2,5 bar

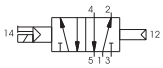

Operational characteristics

Fluid	Max working pressure (bar)	Temperature °C	Flow rate at 6 bar with Δp=1 (Nl/min)	Orifice size (mm)	Working ports size
Filtered and lubricated air	10 bar	-5 ÷ +50	1360 Nl/min	mm 8	G 1/4"

3/2 **Solenoid - Solenoid**

Ordering code

464/1.Ⓣ.0.0.M2

	TYPE
Ⓣ	32=3 ways
	52=5 ways

Solenoid - Solenoid 5/2

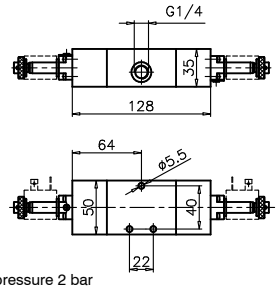

Weight gr. 730
Minimum working pressure 2 bar

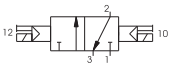

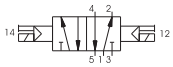

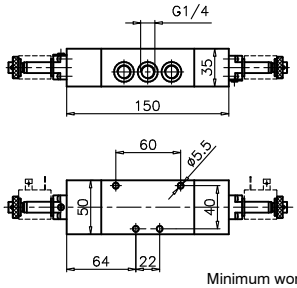

Weight gr. 820
Minimum working pressure 2 bar

Operational characteristics

Fluid	Max working pressure (bar)	Temperature °C	Flow rate at 6 bar with Δp=1 (Nl/min)	Orifice size (mm)	Working ports size
Filtered and lubricated air	10 bar	-5 ÷ +50	1360 Nl/min	mm 8	G 1/4"

Solenoid - Solenoid 5/3

Ordering code

464/1.53.Ⓕ.0.0.M2

	FUNCTION
Ⓕ	31=Closed centres
	32=Open centres
	33=Pressured centres

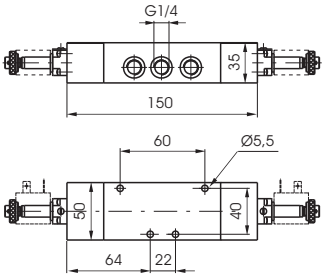

Weight gr. 820
Minimum working pressure 3 bar

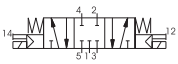

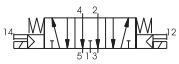

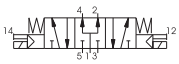

Operational characteristics

Fluid	Max working pressure (bar)	Temperature °C	Flow rate at 6 bar with Δp=1 (Nl/min)	Orifice size (mm)	Working ports size
Filtered and lubricated air	10 bar	-5 ÷ +50	1280 Nl/min	mm 8	G 1/4"

Solenoid - Spring (self-feeding)

3/2
5/2

Ordering code

T424.Ⓣ.0.1.Ⓥ

Ⓣ	TYPE
	32=3 ways
	52=5 ways
Ⓥ	VOLTAGE
	B04=12 V DC
	B05=24 V DC
	B09=24 V DC (2W)
	B56=24 V 50-60 Hz
	B57=110 V 50-60 Hz
	B58=230V 50-60 Hz

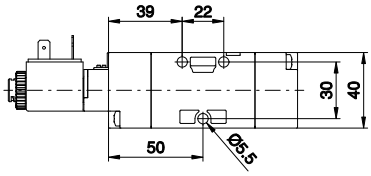

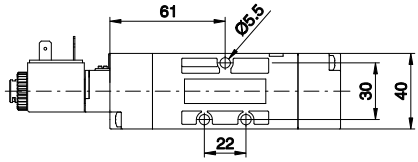

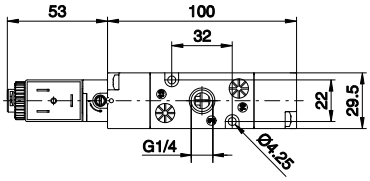

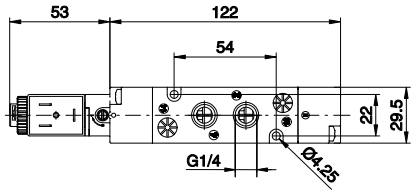

Weight gr. 205
Minimum operating pressure 2,5 bar

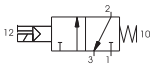

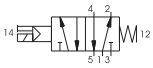

Weight gr. 235
Minimum operating pressure 2,5 bar

Operational characteristics

Fluid	Max working pressure (bar)	Temperature °C	Flow rate at 6 bar with Δp=1 (Nl/min)	Ø Orifice size (mm)	Working ports size
Filtered and lubricated air	10 bar	-5 ÷ +50	1050 Nl/min	mm 8,5	G 1/4"

Solenoid - Spring (external feeding)

3/2
5/2

Ordering code

T424.Ⓣ.0.1.E.Ⓥ

Ⓣ	TYPE
	32=3 ways
	52=5 ways
Ⓥ	VOLTAGE
	B04=12 V DC
	B05=24 V DC
	B09=24 V DC (2W)
	B56=24 V 50-60 Hz
	B57=110 V 50-60 Hz
	B58=230V 50-60 Hz

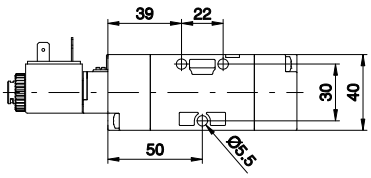

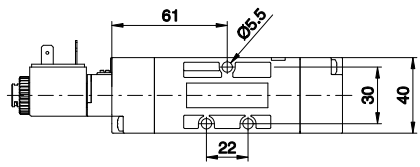

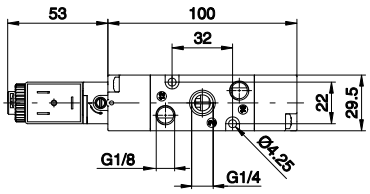

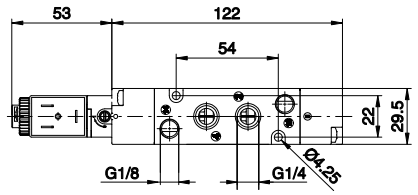

Weight gr. 205
Minimum operating pressure 2,5 bar

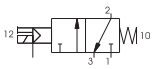

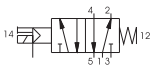

Weight gr. 235
Minimum operating pressure 2,5 bar

Operational characteristics

Fluid	Max working pressure (bar)	Temperature °C	Flow rate at 6 bar with Δp=1 (Nl/min)	Ø Orifice size (mm)	Working ports size	Pilot ports size
Filtered and lubricated air	10 bar	-5 ÷ +50	1050 Nl/min	mm 8,5	G 1/4"	G 1/8"

Solenoid - Differential (self-feeding)

3/2
5/2

Ordering code

T424.Ⓣ.0.12.Ⓥ

Ⓣ	TYPE
	32=3 ways
	52=5 ways
Ⓥ	VOLTAGE
	B04=12 V DC
	B05=24 V DC
	B09=24 V DC (2W)
	B56=24 V 50-60 Hz
	B57=110 V 50-60 Hz
	B58=230V 50-60 Hz

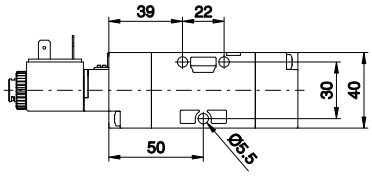

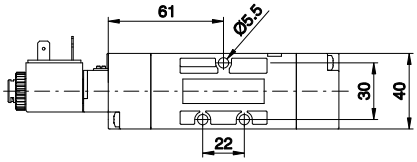

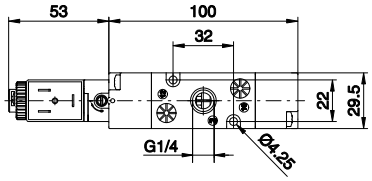

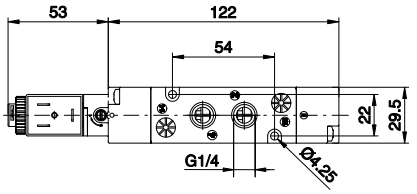

Weight gr. 205
Minimum operating pressure 2 bar

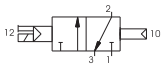

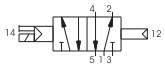

Weight gr. 235
Minimum operating pressure 2 bar

Operational characteristics

Fluid	Max working pressure (bar)	Temperature °C	Flow rate at 6 bar with Δp=1 (Nl/min)	Ø Orifice size (mm)	Working ports size
Filtered and lubricated air	10 bar	-5 ÷ +50	1050 Nl/min	mm 8,5	G 1/4"

Solenoid - Differential (external feeding)

3/2
5/2

Ordering code

T424.Ⓣ.0.12.E.Ⓥ

Ⓣ	TYPE
	32=3 ways
	52=5 ways
Ⓥ	VOLTAGE
	B04=12 V DC
	B05=24 V DC
	B09=24 V DC (2W)
	B56=24 V 50-60 Hz
	B57=110 V 50-60 Hz
	B58=230V 50-60 Hz

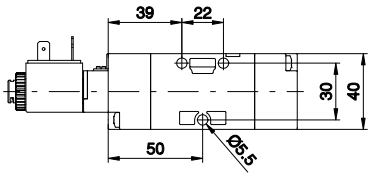

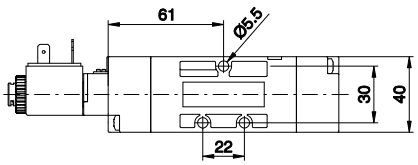

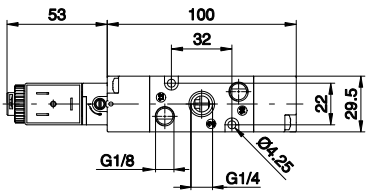

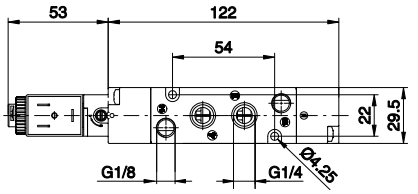

Weight gr. 205
Minimum operating pressure 2 bar

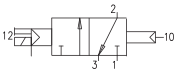

Weight gr. 235
Minimum operating pressure 2 bar

Operational characteristics

Fluid	Max working pressure (bar)	Temperature °C	Flow rate at 6 bar with Δp=1 (Nl/min)	Ø Orifice size (mm)	Working ports size	Pilot ports size
Filtered and lubricated air	10 bar	-5 ÷ +50	1050 Nl/min	mm 8,5	G 1/4"	G 1/8"

Solenoid - Solenoid (self-feeding)

3/2
5/2

Ordering code

T424.Ⓣ.0.0.Ⓥ

Ⓣ	TYPE
	32=3 ways
	52=5 ways
Ⓥ	VOLTAGE
	B04=12 V DC
	B05=24 V DC
	B09=24 V DC (2W)
	B56=24 V 50-60 Hz
	B57=110 V 50-60 Hz
	B58=230V 50-60 Hz

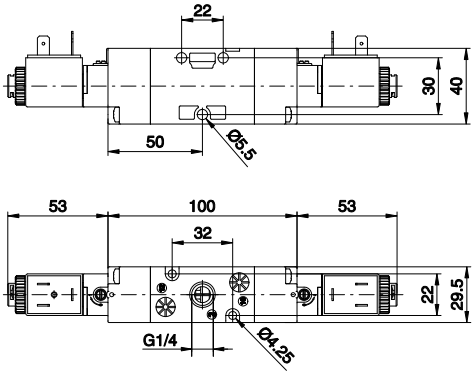

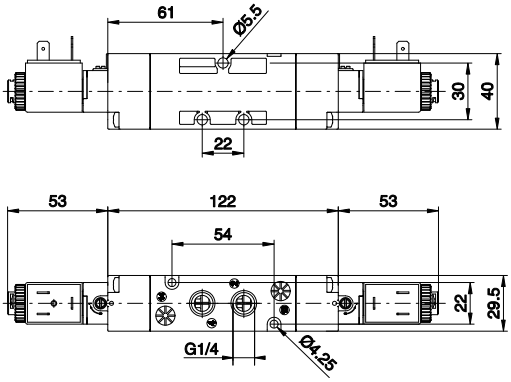

Weight gr. 240
Minimum operating pressure 2 bar

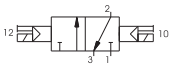

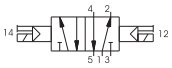

Weight gr. 270
Minimum operating pressure 2 bar

Operational characteristics

Fluid	Max working pressure (bar)	Temperature °C	Flow rate at 6 bar with Δp=1 (Nl/min)	Ø Orifice size (mm)	Working ports size
Filtered and lubricated air	10 bar	-5 ÷ +50	1050 Nl/min	mm 8,5	G 1/4"

Solenoid - Solenoid (external feeding)

3/2
5/2

Ordering code

T424.Ⓣ.0.0.E.Ⓥ

Ⓣ	TYPE
	32=3 ways
	52=5 ways
Ⓥ	VOLTAGE
	B04=12 V DC
	B05=24 V DC
	B09=24 V DC (2W)
	B56=24 V 50-60 Hz
	B57=110 V 50-60 Hz
	B58=230V 50-60 Hz

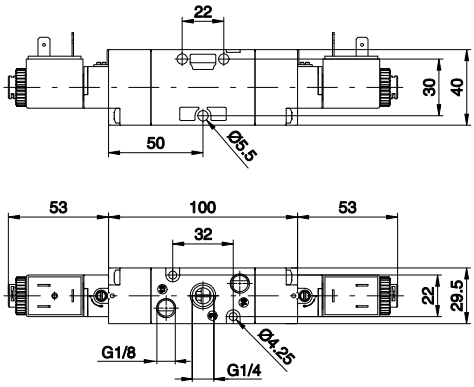

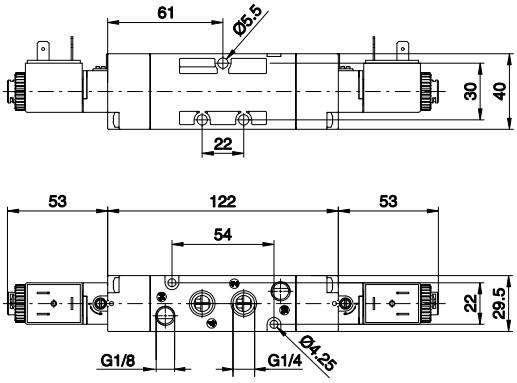

Weight gr. 240
Minimum operating pressure 2 bar

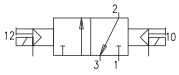

Weight gr. 270
Minimum operating pressure 2 bar

Operational characteristics

Fluid	Max working pressure (bar)	Temperature °C	Flow rate at 6 bar with Δp=1 (Nl/min)	Ø Orifice size (mm)	Working ports size	Pilot ports size
Filtered and lubricated air	10 bar	-5 ÷ +50	1050 Nl/min	mm 8,5	G 1/4"	G 1/8"

Solenoid - Solenoid (self-feeding)

5/3

Ordering code

T424.53.Ⓕ.0.0.Ⓥ

Ⓕ	FUNCTION
	31=Closed centres
	32=Open centres
	33=Pressured centres
Ⓥ	VOLTAGE
	B04=12 V DC
	B05=24 V DC
	B09=24 V DC (2W)
	B56=24 V 50-60 Hz
	B57=110 V 50-60 Hz
	B58=230V 50-60 Hz

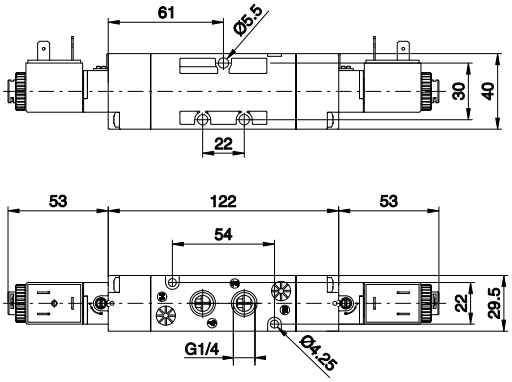

Weight gr. 295
Minimum operating pressure 3 bar

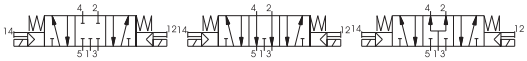

Operational characteristics

Fluid	Max working pressure (bar)	Temperature °C	Flow rate at 6 bar with Δp=1 (Nl/min)	Ø Orifice size (mm)	Working ports size
Filtered and lubricated air	10 bar	-5 ÷ +50	900 Nl/min	mm 8,5	G 1/4"

Solenoid - Solenoid (external feeding)

5/3

Ordering code

T424.53.Ⓕ.0.0.E.Ⓥ

Ⓕ	FUNCTION
	31=Closed centres
	32=Open centres
	33=Pressured centres
Ⓥ	VOLTAGE
	B04=12 V DC
	B05=24 V DC
	B09=24 V DC (2W)
	B56=24 V 50-60 Hz
	B57=110 V 50-60 Hz
	B58=230V 50-60 Hz

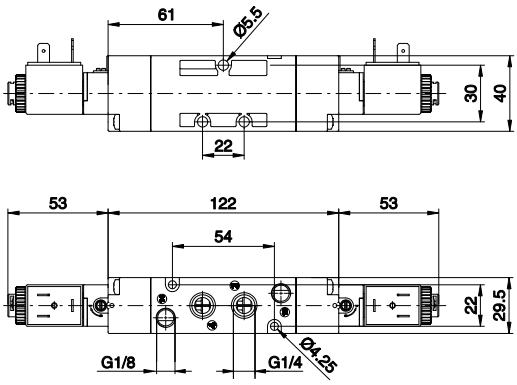

Weight gr. 295
Minimum operating pressure 3 bar

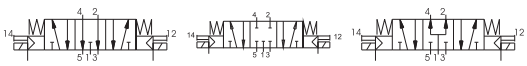

Operational characteristics

Fluid	Max working pressure (bar)	Temperature °C	Flow rate at 6 bar with Δp=1 (Nl/min)	Ø Orifice size (mm)	Working ports size	Pilot ports size
Filtered and lubricated air	10 bar	-5 ÷ +50	900 Nl/min	mm 8,5	G 1/4"	G 1/8"

Manifold

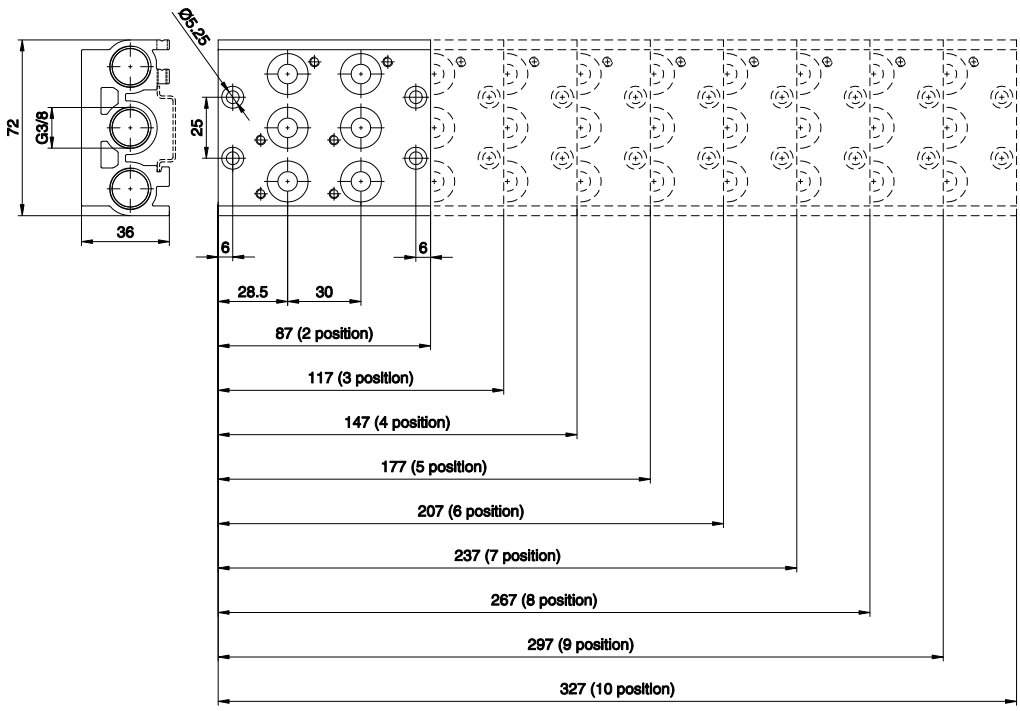

Ordering code	
T424.Ⓟ	
Ⓟ	N. POSITIONS
	02=2 pos. (weight 350 gr.)
	03=3 pos. (weight 420 gr.)
	04=4 pos. (weight 560 gr.)
	05=5 pos. (weight 670 gr.)
	06=6 pos. (weight 770 gr.)
	07=7 pos. (weight 880 gr.)
	08=8 pos. (weight 980 gr.)
	09=9 pos. (weight 1090 gr.)
	10=10 pos. (weight 1200 gr.)

Modular collectors

Ordering code	
T424.Ⓣ	
Ⓣ	TYPE
	01=Single complete base
	01K=Complete modular bases (batches of 15 pieces)
	30K=Hollow bush, complete with O-rings (Nr. 50 pieces)
	31K=Blank bush, complete with O-rings (Nr. 50 pieces)
	32K =Intermediate air intake with screw (Nr. 5 pieces)
	33=Screw to suite solenoid valves (Nr. 50 pieces)
	34=Screw for joning bases (Nr. 50 pieces)
	35=Washer for screw for joning bases (Nr. 50 pieces)
	36=O-ring seal (Nr. 50 pieces)

Closing plate

Ordering code
T424.00

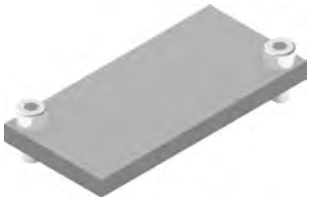

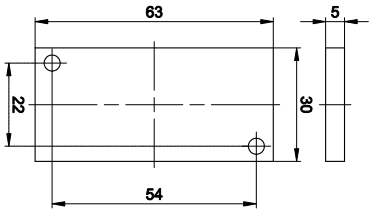

Weight gr. 25

Solenoid - Spring

3/2
5/2

Ordering code

452.Ⓣ.0.1.M2

	TYPE
Ⓣ	32=3 ways
	52=5 ways

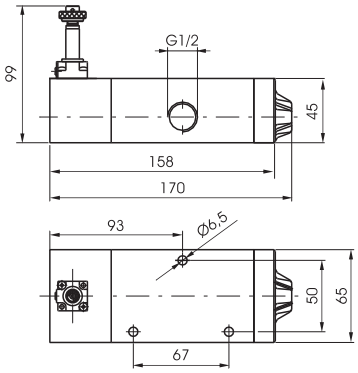

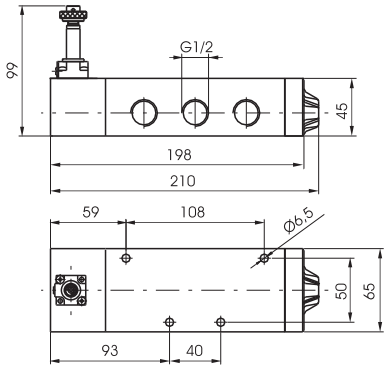

Weight gr. 1152
Minimum working pressure 2,5 bar

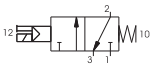

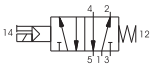

Weight gr. 1422
Minimum working pressure 2,5 bar

Operational characteristics

Fluid	Max working pressure (bar)	Temperature °C	Flow rate at 6 bar with Δp=1 (Nl/min)	Orifice size (mm)	Working ports size
Filtered and lubricated air	10 bar	-5 ÷ +50	3500 Nl/min	mm 15	G 1/2"

Solenoid - Differential

3/2
5/2

Ordering code

452.Ⓣ.0.12.M2

	TYPE
Ⓣ	32=3 ways
	52=5 ways

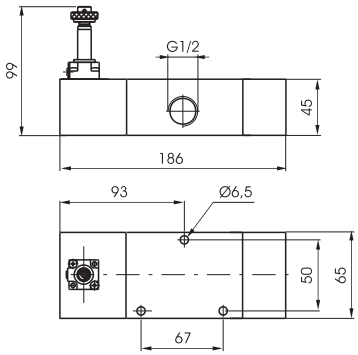

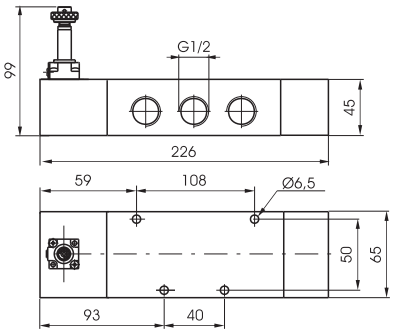

Weight gr. 1422
Minimum working pressure 2,5 bar

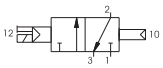

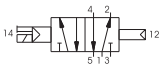

Weight gr. 1692
Minimum working pressure 2,5 bar

Operational characteristics

Fluid	Max working pressure (bar)	Temperature °C	Flow rate at 6 bar with Δp=1 (Nl/min)	Orifice size (mm)	Working ports size
Filtered and lubricated air	10 bar	-5 ÷ +50	3500 Nl/min	mm 15	G 1/2"

Solenoid - Solenoid

3/2
5/2

Ordering code

452.Ⓣ.0.0.M2

Ⓣ	TYPE
	32=3 ways
	52=5 ways

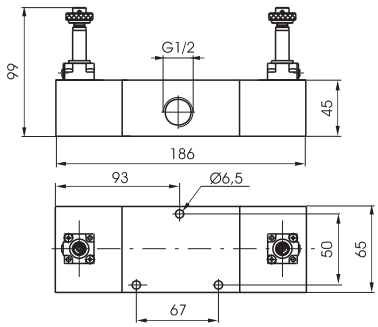

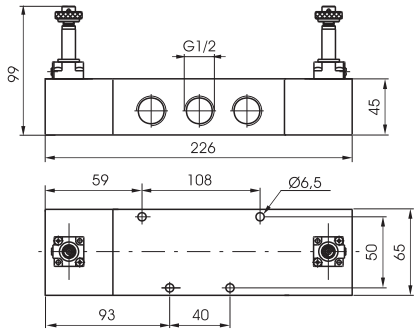

Weight gr. 1474
Minimum working pressure 2 bar

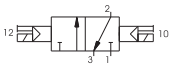

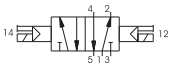

Weight gr. 1744
Minimum working pressure 2 bar

Operational characteristics

Fluid	Max working pressure (bar)	Temperature °C	Flow rate at 6 bar with Δp=1 (Nl/min)	Orifice size (mm)	Working ports size
Filtered and lubricated air	10 bar	-5 ÷ +50	3500 Nl/min	mm 15	G 1/2"

Solenoid - Solenoid

5/3

Ordering code

452.53.Ⓕ.0.0.M2

Ⓕ	FUNCTION
	31=Closed centres
	32=Open centres
	33=Pressured centres

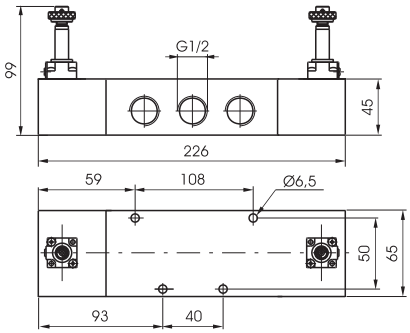

Weight gr. 1744
Minimum working pressure 3 bar

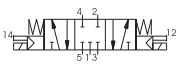

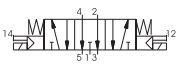

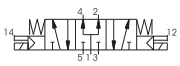

Operational characteristics

Fluid	Max working pressure (bar)	Temperature °C	Flow rate at 6 bar with Δp=1 (Nl/min)	Orifice size (mm)	Working ports size
Filtered and lubricated air	10 bar	-5 ÷ +50	3500 Nl/min	mm 15	G 1/2"

Solenoid - Spring

3/2
5/2

Ordering code

452/1.Ⓣ.0.1.M2

	TYPE
Ⓣ	32=3 ways
	52=5 ways

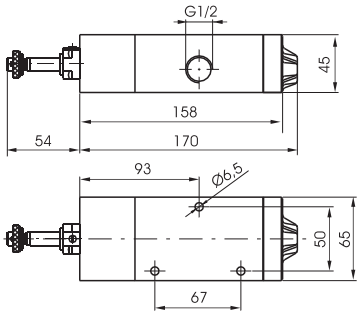

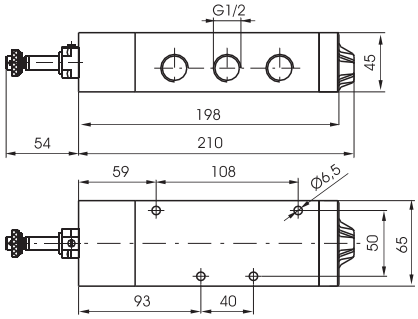

Weight gr. 1330
Minimum working pressure 2,5 bar

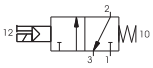

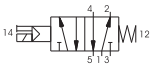

Weight gr. 1600
Minimum working pressure 2,5 bar

Operational characteristics

Fluid	Max working pressure (bar)	Temperature °C	Flow rate at 6 bar with Δp=1 (Nl/min)	Orifice size (mm)	Working ports size
Filtered and lubricated air	10 bar	-5 ÷ +50	3500 Nl/min	mm 15	G 1/2"

Solenoid - Differential

3/2
5/2

Ordering code

452/1.Ⓣ.0.12.M2

	TYPE
Ⓣ	32=3 ways
	52=5 ways

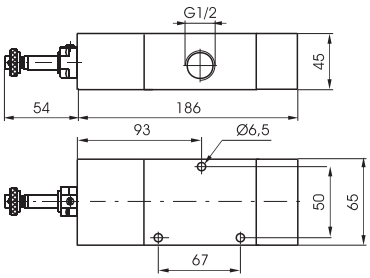

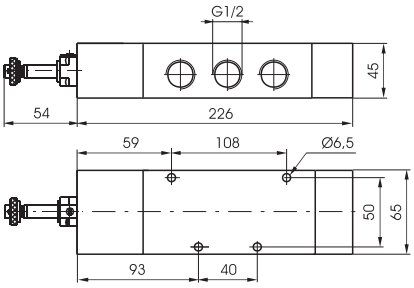

Weight gr. 1600
Minimum working pressure 2,5 bar

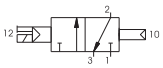

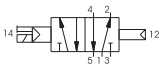

Weight gr. 1870
Minimum working pressure 2,5 bar

Operational characteristics

Fluid	Max working pressure (bar)	Temperature °C	Flow rate at 6 bar with Δp=1 (Nl/min)	Orifice size (mm)	Working ports size
Filtered and lubricated air	10 bar	-5 ÷ +50	3500 Nl/min	mm 15	G 1/2"

Solenoid - Solenoid

3/2
5/2

Ordering code

452/1.Ⓣ.0.0.M2

Ⓣ	TYPE
	32=3 ways
	52=5 ways

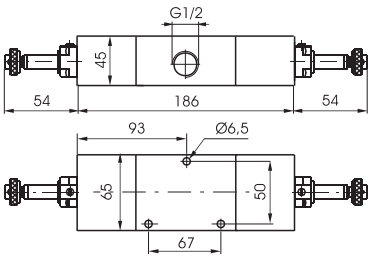

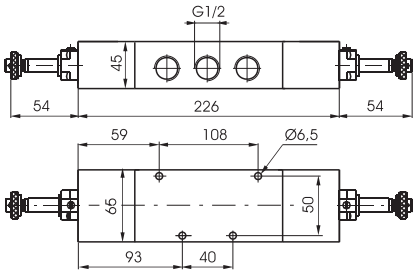

Weight gr. 1830
Minimum working pressure 2 bar

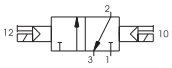

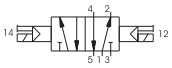

Weight gr. 2100
Minimum working pressure 2 bar

Operational characteristics

Fluid	Max working pressure (bar)	Temperature °C	Flow rate at 6 bar with Δp=1 (Nl/min)	Orifice size (mm)	Working ports size
Filtered and lubricated air	10 bar	-5 ÷ +50	3500 Nl/min	mm 15	G 1/2"

Solenoid - Solenoid

5/3

Ordering code

452/1.53.Ⓕ.0.0.M2

Ⓕ	FUNCTION
	31=Closed centres
	32=Open centres
	33=Pressured centres

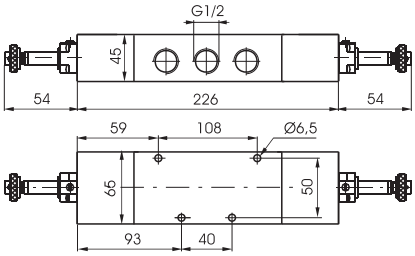

Weight gr. 2100
Minimum working pressure 3 bar

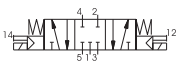

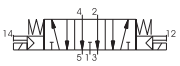

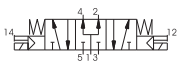

Operational characteristics

Fluid	Max working pressure (bar)	Temperature °C	Flow rate at 6 bar with Δp=1 (Nl/min)	Orifice size (mm)	Working ports size
Filtered and lubricated air	10 bar	-5 ÷ +50	3500 Nl/min	mm 15	G 1/2"

2

3/2 Solenoid - Spring

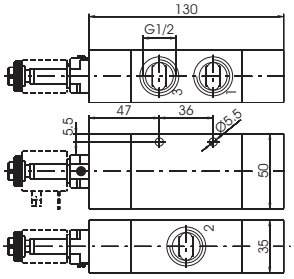

Weight gr. 578
Minimum working pressure 2,5 bar

Ordering code

412/2❶.0.1.Ⓥ

❶	TYPE
	32=3 ways
	52=5 ways
Ⓥ	VARIANT
	C.M2=3 ways Normally Closed
	A.M2=3 ways Normally Open
	M2=5 ways

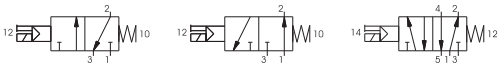

Solenoid - Spring 5/2

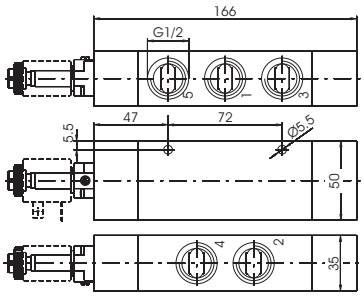

Weight gr. 700
Minimum working pressure 2,5 bar

Operational characteristics

Fluid	Max working pressure (bar)	Temperature °C	Flow rate at 6 bar with Δp=1 (Nl/min)	Orifice size (mm)	Working ports size
Filtered air, with or without lubrication	10 bar	-5 ÷ +50	3600 Nl/min	mm 15	G 1/2"

3/2 Solenoid - Differential external

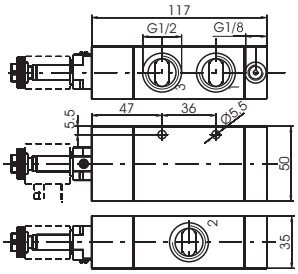

Weight gr. 522
Minimum working pressure 2,5 bar

Ordering code

412/2❶.0.12.Ⓥ

❶	TYPE
	32=3 ways
	52=5 ways
Ⓥ	VARIANT
	C.M2=3 ways Normally Closed
	A.M2=3 ways Normally Open
	M2=5 ways

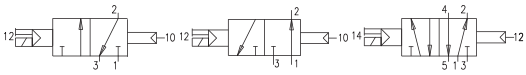

Solenoid - Differential external 5/2

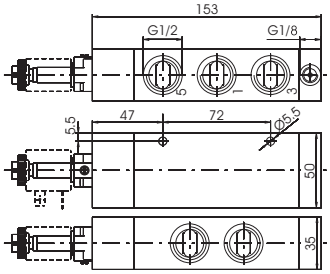

Weight gr. 644
Minimum working pressure 2,5 bar

Operational characteristics

Fluid	Max working pressure (bar)	Temperature °C	Flow rate at 6 bar with Δp=1 (Nl/min)	Orifice size (mm)	Working ports size
Filtered air, with or without lubrication	10 bar	-5 ÷ +50	3600 Nl/min	mm 15	G 1/2"

3/2 Pneumatic - Differential self aligned

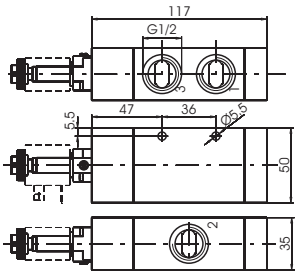

Weight gr. 526
Minimum working pressure 2,5 bar

Ordering code

412/2❶.0.12/1.Ⓥ

❶	TYPE
	32=3 ways
	52=5 ways
Ⓥ	VARIANT
	C.M2=3 ways Normally Closed
	A.M2=3 ways Normally Open
	M2=5 ways

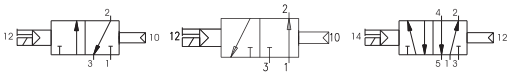

Pneumatic - Differential self aligned 5/2

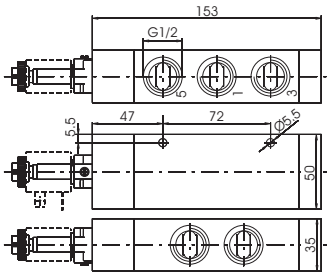

Weight gr. 648
Minimum working pressure 2,5 bar

Operational characteristics

Fluid	Max working pressure (bar)	Temperature °C	Flow rate at 6 bar with Δp=1 (Nl/min)	Orifice size (mm)	Working ports size
Filtered air, with or without lubrication	10 bar	-5 ÷ +50	3600 Nl/min	mm 15	G 1/2"

3/2 **Solenoid - Solenoid**

Ordering code

412/2Ⓣ.0.0.M2

Ⓣ	TYPE
	32=3 ways
	52=5 ways

Solenoid - Solenoid 5/2

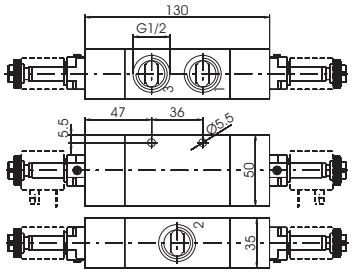

Weight gr. 612
Minimum working pressure 2 bar

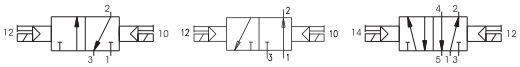

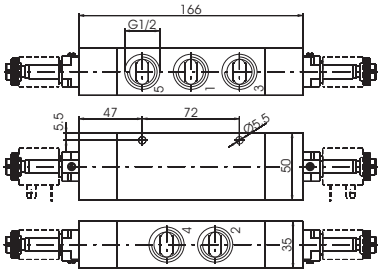

Weight gr. 732
Minimum working pressure 2 bar

Operational characteristics

Fluid	Max working pressure (bar)	Temperature °C	Flow rate at 6 bar with Δp=1 (Nl/min)	Orifice size (mm)	Working ports size
Filtered air, with or without lubrication	10 bar	-5 ÷ +50	3600 Nl/min	mm 15	G 1/2"

Solenoid - Solenoid 5/3

Ordering code

412/2.53.Ⓣ.0.0.M2

Ⓕ	FUNCTION
	31=Closed centres
	32=Open centres
	33=Pressured centres

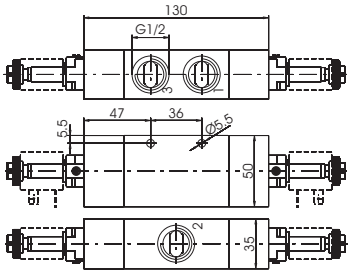

Weight gr. 794
Minimum working pressure 3 bar

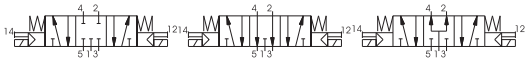

Operational characteristics

Fluid	Max working pressure (bar)	Temperature °C	Flow rate at 6 bar with Δp=1 (Nl/min)	Orifice size (mm)	Working ports size
Filtered air, with or without lubrication	10 bar	-5 ÷ +50	3300 Nl/min	mm 15	G 1/2"

Solenoid - Spring

3/2
5/2

Ordering code

411.Ⓣ.0.1.Ⓢ

Ⓣ	TYPE
	32=3 ways
	52=5 ways
Ⓢ	SOLENOID CODE
	S=See Solenoid valves "S" type, Series 300

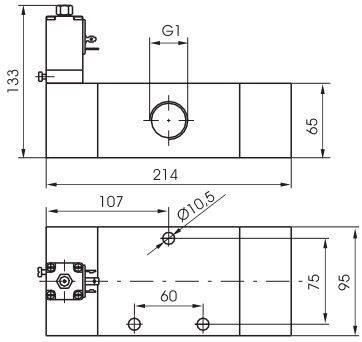

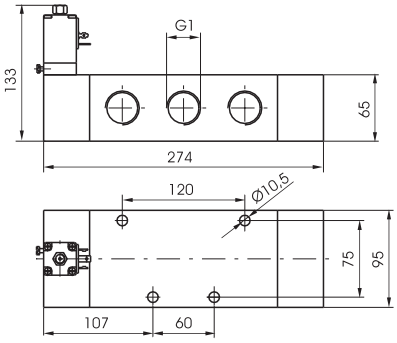

Weight gr. 3400
Minimum piloting pressure 2,5 bar

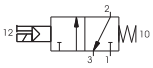

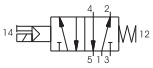

Weight gr. 4300
Minimum piloting pressure 2,5 bar

Operational characteristics

Fluid	Max working pressure (bar)	Temperature °C	Flow rate at 6 bar with Δp=1 (Nl/min)	Orifice size (mm)	Working ports size
Filtered and lubricated air	10 bar	-5 ÷ +50	6500 Nl/min	mm 20	G 1"

Solenoid - Differential

3/2
5/2

Ordering code

411.Ⓣ.0.12.Ⓢ

Ⓣ	TYPE
	32=3 ways
	52=5 ways
Ⓢ	SOLENOID CODE
	S=See Solenoid valves "S" type, Series 300

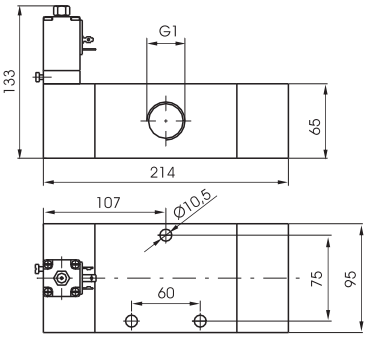

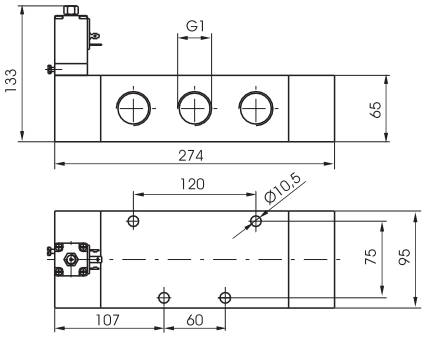

Weight gr. 3400
Minimum piloting pressure 2,5 bar

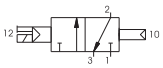

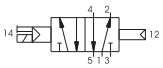

Weight gr. 4300
Minimum piloting pressure 2,5 bar

Operational characteristics

Fluid	Max working pressure (bar)	Temperature °C	Flow rate at 6 bar with Δp=1 (Nl/min)	Orifice size (mm)	Working ports size
Filtered and lubricated air	10 bar	-5 ÷ +50	6500 Nl/min	mm 20	G 1"

Solenoid - Solenoid

3/2
5/2

Ordering code

411.Ⓣ.0.0.Ⓢ

Ⓣ	TYPE
	32=3 ways
	52=5 ways
Ⓢ	SOLENOID CODE
	S=See Solenoid valves "S" type, Series 300

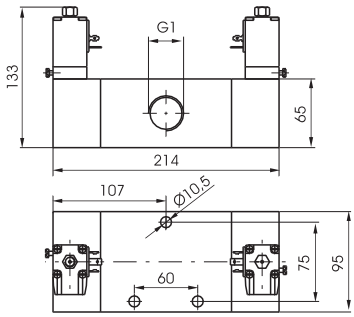

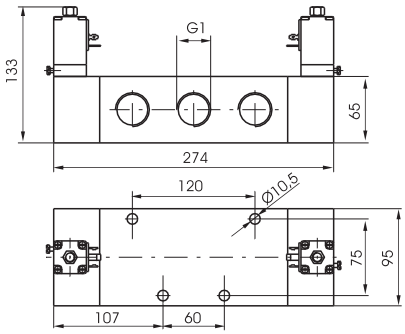

Weight gr. 3700
Minimum piloting pressure 2 bar

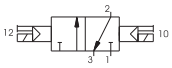

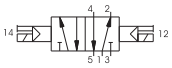

Weight gr. 4600
Minimum piloting pressure 2 bar

Operational characteristics

Fluid	Max working pressure (bar)	Temperature °C	Flow rate at 6 bar with Δp=1 (Nl/min)	Orifice size (mm)	Working ports size
Filtered and lubricated air	10 bar	-5 ÷ +50	6500 Nl/min	mm 20	G 1"

Solenoid - Solenoid

5/3

Ordering code

411.53.Ⓕ.0.0.Ⓢ

Ⓕ	FUNCTION
	31=Closed centres
	32=Open centres
	33=Pressured centres
Ⓢ	SOLENOID CODE
	S=See Solenoid valves "S" type, Series 300

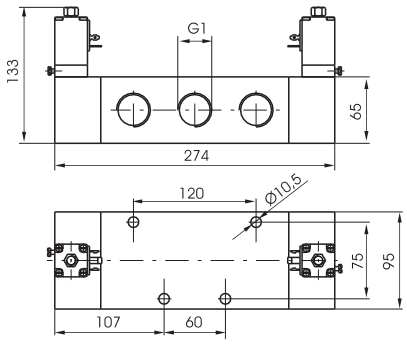

Weight gr. 4700
Minimum piloting pressure 3 bar

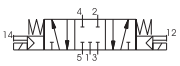

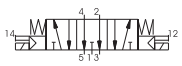

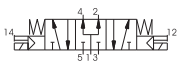

Operational characteristics

Fluid	Max working pressure (bar)	Temperature °C	Flow rate at 6 bar with Δp=1 (Nl/min)	Orifice size (mm)	Working ports size
Filtered and lubricated air	10 bar	-5 ÷ +50	6500 Nl/min	mm 20	G 1"

General

The large flow valves and solenoid poppet valves for compressed air and vacuum are manufactured for 3/2 and 2/2 versions only, either normally close and normally open.
For the compressed air oparation, the application is similar to the equivalent spool valves while for the vacuum operation a particular attention should be paid to the valve selected and its connection to the pump.
For the electric pilot it is used a normal miniature solenoid M2 with pneumatic actuator and the special miniature solenoid M2/V with vacuum.
The ordering code are referring to the solenoid valves with mechanics "M2" or "M2/V" assembled (see Series 300). (Coil are not included and have to be ordored separately).

Coil c US homologated are available (see 300 Series).

Construction characteristics

	G 3/8"	G 1/2" - G 3/4"	G 1"	G 1 1/2"
Body	Aluminium	Zinc alloy	Aluminium	Aluminium
Bottom plates	Aluminium			
Actuators	NBR			
Pistons	Aluminium			
Actuators rod	Stainless steel			
Spring	Stainless steel			
Piston seals	NBR			

Use and maintenance

These valves have a mean life of 10 to 15 million cycles under normal operating conditions.
Lubrication is not required for good operation but we recommend good filtration to avoid dirty deposit causing malfunction.
Check that the operating conditions: pressure, temperature and so on are as suggested.
The exhaust port of the distributor has to be protected in a dusty and dirty environment.
For these products, according to the construction technique and special application, is not required any maintenance with parts replacement. When necessary it is sufficient to clean the internal parts.
When it is used the solenoid valves with internal pilot, either for air or vacuum, inlet flow rate must be equal or higher that the required consumption flow rate, otherwise is better choose the external pilot version.

Vacuum valves connections

NORMALLY CLOSED INTERNAL PILOT

779/V.32.0.1AC
773/V.32.0.1AC
771/V.32.0.1AC

P = 1 = EXHAUST
A = 2 = OUTLET
R = 3 = PUMP

NORMALLY OPEN INTERNAL PILOT

779/V.32.0.1AA
773/V.32.0.1AA
771/V.32.0.1AA

P = 1 = PUMP
A = 2 = OUTLET
R = 3 = EXHAUST

NORMALLY CLOSED EXTERNAL PILOT

779/V.32.0.1C
773/V.32.0.1C
771/V.32.0.1C

779/V.32.11.1C
773/V.32.11.1C
771/V.32.11.1C

P = 1 = PUMP
A = 2 = OUTLET
R = 3 = EXHAUST

NORMALLY OPEN EXTERNAL PILOT

779/V.32.0.1A
773/V.32.0.1A
771/V.32.0.1A

779/V.32.11.1A
773/V.32.11.1A
771/V.32.11.1A

P = 1 = EXHAUST
A = 2 = OUTLET
R = 3 = PUMP

Pneumatic - Spring

Ordering code	
779.32.11.Ⓕ	
Ⓕ	FUNCTION
	1C=Normally Closed
	1A=Normally Open

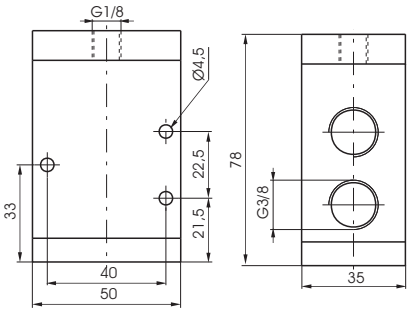

Weight gr. 360
Attention : for the Normally open version, connect the inlet port to the exhaust port No "3".
Minimum piloting pressure 2,5 bar

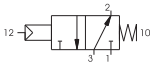

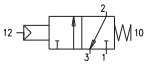

Operational characteristic	Fluid	Max working pressure (bar)	Temperature °C	Flow rate at 6 bar with Δp=1 (Nl/min)	Orifice size (mm)	Working ports size	Pilot ports size
	Filtered and lubricated air	10	-10 - +70	1800	10	G 3/8"	G 1/8"

Solenoid - Spring

Ordering code	
779.32.0.Ⓕ.M2	
Ⓕ	FUNCTION
	1AC=Internal Pilot N.C.
	1C=External Pilot Normally Closed
	1AA=Internal Pilot N.A.
	1A=External Pilot Normally Open

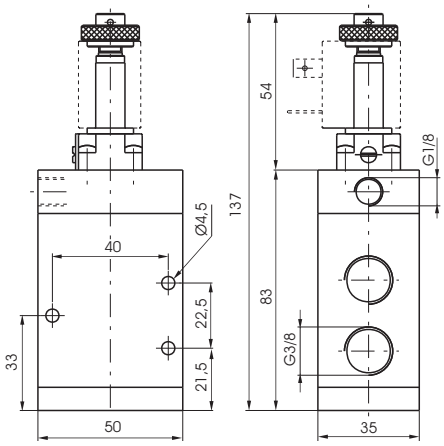

Weight gr. 420
Minimum piloting pressure 2,5 bar (External Pilot) - 3 bar (Internal Pilot)

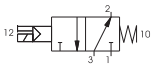

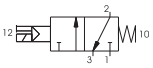

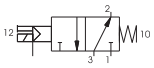

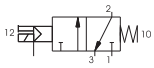

Operational characteristic	Fluid	Max working pressure (bar)	Temperature °C	Flow rate at 6 bar with Δp=1 (Nl/min)	Orifice size (mm)	Working ports size	Pilot ports size
	Filtered and lubricated air	10	-10 - +50	1800	10	G 3/8"	G 1/8"

2

Pneumatic - Spring

Ordering code

779/V.32.11.Ⓕ

Ⓕ	FUNCTION
	1C=Normally Closed
	1A=Normally Open

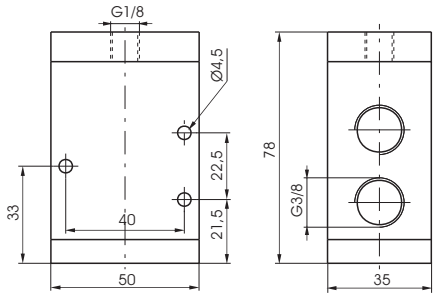

Weight gr. 360
Minimum piloting pressure 2 bar

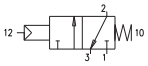

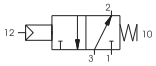

Operational characteristic	Fluid	Temperature °C	Orifice size (mm)	Working ports size	Pilot ports size
	Vacuum	-10 - + 70	10	G 3/8"	G 1/8"

Solenoid - Spring - Internal Pilot

Ordering code

779/V.32.0.Ⓕ.M2/V

Ⓕ	FUNCTION
	1AA=Normally Open
	1AC=Normally Closed

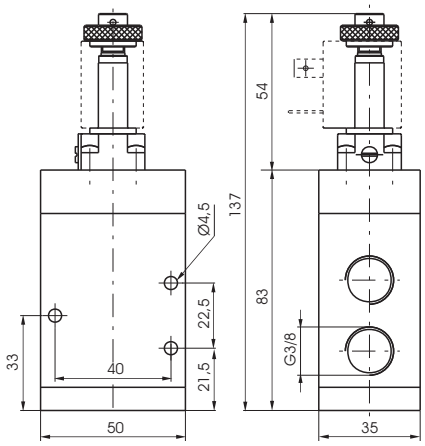

Weight gr. 420

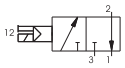

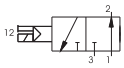

Operational characteristic	Fluid	Temperature °C	Orifice size (mm)	Working ports size	Pilot ports size
	Vacuum	-10 - + 50	10	G 3/8"	G 1/8"

Solenoid - Spring - External Pilot

Ordering code

779/V.32.0.Ⓕ.M2

Ⓕ	FUNCTION
	1A=Normally Open
	1C=Normally Closed

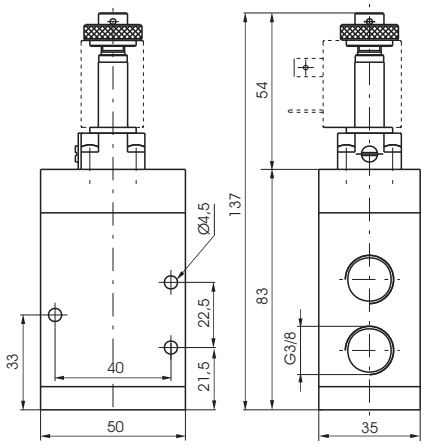

Weight gr. 420
Minimum piloting pressure 2 bar (External Pilot)

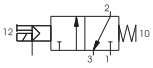

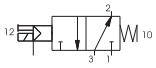

Operational characteristic	Fluid	Temperature °C	Orifice size (mm)	Working ports size	Pilot ports size
	Vacuum	-10 - + 50	10	G 3/8"	G 1/8"

Pneumatic - Spring

Ordering code
772.32.11.1C

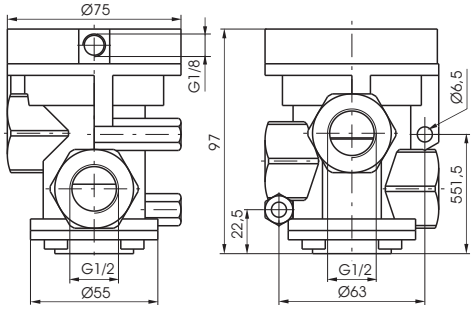

Weight gr. 1100
Normally Closed
Minimum piloting pressure 2,5 bar

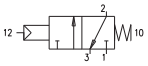

Operational characteristic	Fluid	Max working pressure (bar)	Temperature °C	Flow rate at 6 bar with Δp=1 (Nl/min)	Orifice size (mm)	Working ports size	Pilot ports size
	Filtered and lubricated air	10	-5 - +70	4800	15	G 1/2"	G 1/8"

Solenoid - Spring

Ordering code	
772.32.0.Ⓕ.M2	
Ⓕ	FUNCTION
	1AC=Internal Pilot Normally Closed
	1C=External Pilot Normally Closed

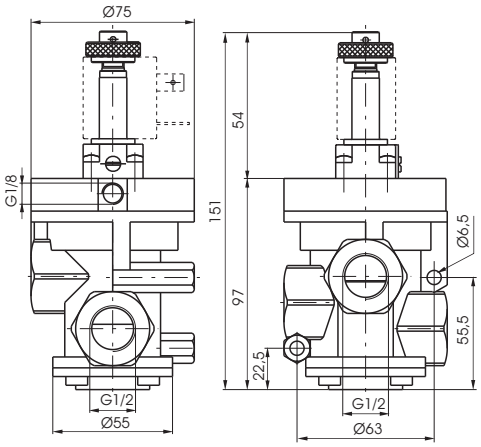

Weight gr. 1160
Minimum piloting pressure 2,5 bar (External Pilot) - 3 bar (Internal Pilot)

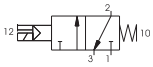

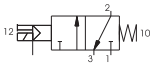

Operational characteristic	Fluid	Max working pressure (bar)	Temperature °C	Flow rate at 6 bar with Δp=1 (Nl/min)	Orifice size (mm)	Working ports size	Pilot ports size
	Filtered and lubricated air	10	-5 - +50	4800	15	G 1/2"	G 1/8"

2

Pneumatic - Spring

Ordering code

772/V.32.11.Ⓕ

Ⓕ	FUNCTION
	1C=Normally Closed
	1A=Normally Open

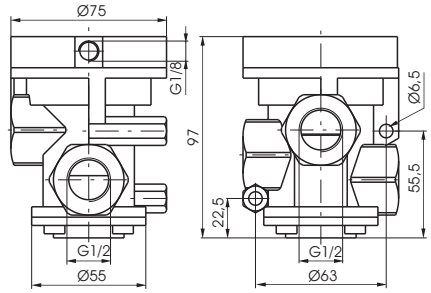

Weight gr. 1100
Minimum piloting pressure 2 bar

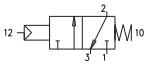

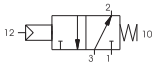

Operational characteristic	Fluid	Temperature °C	Orifice size (mm)	Working ports size	Pilot ports size
	Vacuum	-5 - + 70	15	G 1/2"	G 1/8"

Solenoid - Spring - Internal Pilot

Ordering code

772/V.32.0.Ⓕ.M2/V

Ⓕ	FUNCTION
	1AA=Normally Open
	1AC=Normally Closed

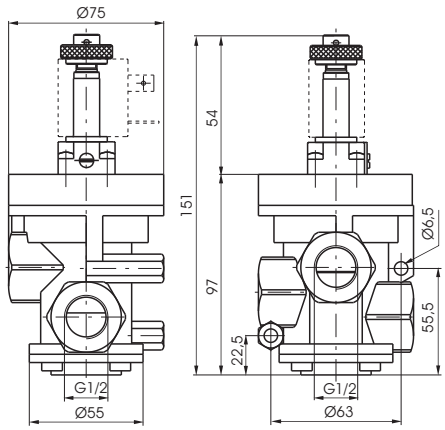

Weight gr. 1160

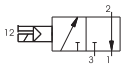

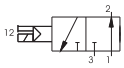

Operational characteristic	Fluid	Temperature °C	Orifice size (mm)	Working ports size	Pilot ports size
	Vacuum	-5 - + 50	15	G 1/2"	G 1/8"

Solenoid - Spring - External Pilot

Ordering code

772/V.32.0.Ⓕ.M2

Ⓕ	FUNCTION
	1A=Normally Open
	1C=Normally Closed

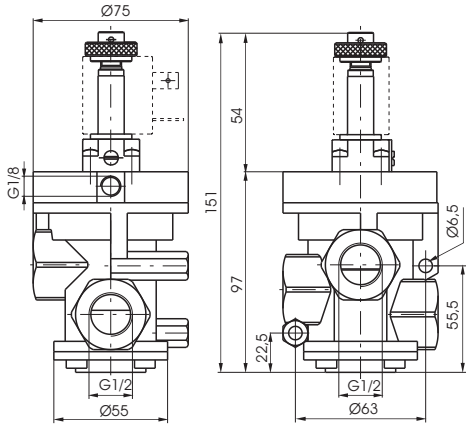

Weight gr. 1160
Minimum piloting pressure 2 bar (External Pilot)

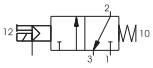

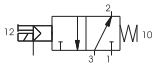

Operational characteristic	Fluid	Temperature °C	Orifice size (mm)	Working ports size	Pilot ports size
	Vacuum	-5 - + 50	15	G 1/2"	G 1/8"

Pneumatic - Spring

Ordering code
773.32.11.1C

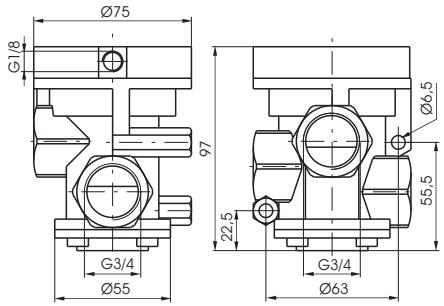

Weight gr. 990

Normally Closed
Minimum piloting pressure 2,5 bar

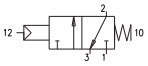

	Fluid	Max working pressure (bar)	Temperature °C	Flow rate at 6 bar with Δp=1 (Nl/min)	Orifice size (mm)	Working ports size	Pilot ports size
Operational characteristic	Filtered and lubricated air	10	-5 - +70	6100	20	G 3/4"	G 1/8"

Solenoid - Spring

Ordering code	
773.32.0.Ⓕ.M2	
Ⓕ	FUNCTION
	1AC=Internal Pilot Normally Closed
	1C=External Pilot Normally Closed

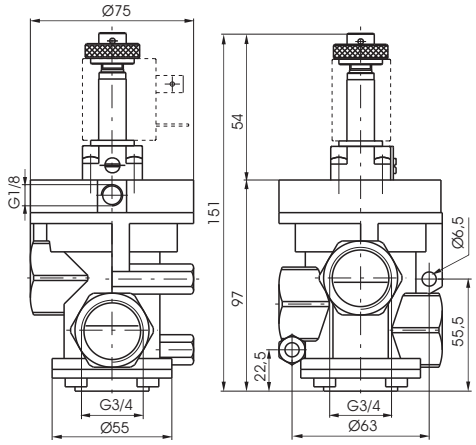

Weight gr. 1050
Minimum piloting pressure 2,5 bar (External Pilot) - 3 bar (Internal Pilot)

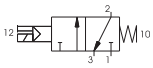

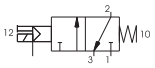

	Fluid	Max working pressure (bar)	Temperature °C	Flow rate at 6 bar with Δp=1 (Nl/min)	Orifice size (mm)	Working ports size	Pilot ports size
Operational characteristic	Filtered and lubricated air	10	-5 - +50	6100	20	G 3/4"	G 1/8"

2

Pneumatic - Spring

Ordering code

773/V.32.11.Ⓕ

Ⓕ	FUNCTION
	1C=Normally Closed
	1A=Normally Open

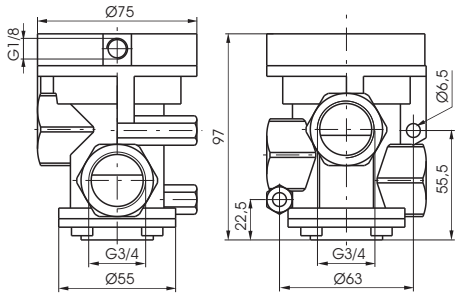

Weight gr. 990
Minimum piloting pressure 2 bar

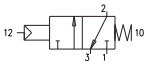

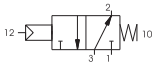

Operational characteristic	Fluid	Temperature °C	Orifice size (mm)	Working ports size	Pilot ports size
	Vacuum	-5 - + 70	20	G 3/4"	G 1/8"

Solenoid - Spring - Internal Pilot

Ordering code

773/V.32.0.Ⓕ.M2/V

Ⓕ	FUNCTION
	1AA=Normally Open
	1AC=Normally Closed

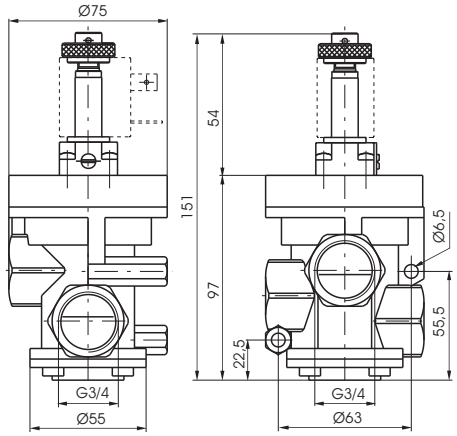

Weight gr. 1050

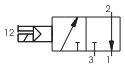

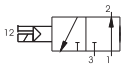

Operational characteristic	Fluid	Temperature °C	Orifice size (mm)	Working ports size	Pilot ports size
	Vacuum	-5 - + 50	20	G 3/4"	G 1/8"

Solenoid - Spring - External Pilot

Ordering code

773/V.32.0.Ⓕ.M2

Ⓕ	FUNCTION
	1A=Normally Open
	1C=Normally Closed

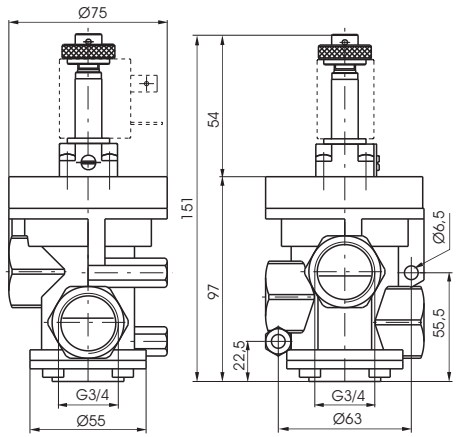

Weight gr. 1050
Minimum piloting pressure 2 bar (External Pilot)

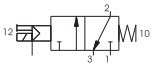

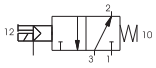

Operational characteristic	Fluid	Temperature °C	Orifice size (mm)	Working ports size	Pilot ports size
	Vacuum	-5 - + 50	20	G 3/4"	G 1/8"

Pneumatic - Spring

Ordering code
771.32.11.1C

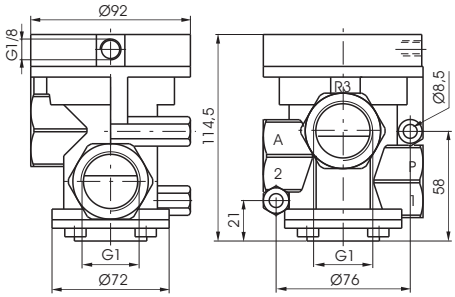

Weight gr. 1060
Normally Closed
Minimum piloting pressure 2 ,5 bar

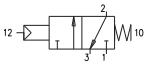

	Fluid	Max working pressure (bar)	Temperature °C	Flow rate at 6 bar with Δp=1 (Nl/min)	Orifice size (mm)	Working ports size	Pilot ports size
Operational characteristic	Filtered and lubricated air	10	-5 - +70	12000	25	G 1"	G 1/8"

Solenoid - Spring

Ordering code
771.32.0.Ⓕ.M2

	FUNCTION
Ⓕ	1AC=Internal Pilot Normally Closed
	1C=External Pilot Normally Closed

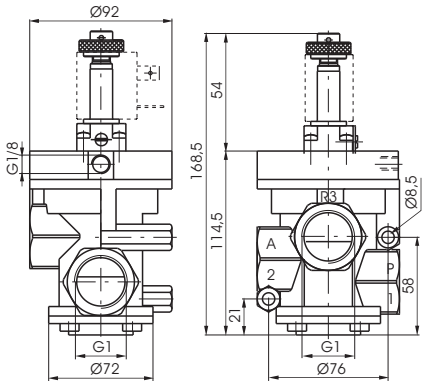

Weight gr. 1120
Minimum piloting pressure 2,5 bar (External Pilot) - 3 bar (Internal Pilot)

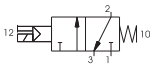

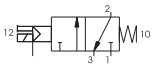

	Fluid	Max working pressure (bar)	Temperature °C	Flow rate at 6 bar with Δp=1 (Nl/min)	Orifice size (mm)	Working ports size	Pilot ports size
Operational characteristic	Filtered and lubricated air	10	-5 - +50	12000	25	G 1"	G 1/8"

2

Pneumatic - Spring

Ordering code

771/V.32.11.Ⓕ

Ⓕ	FUNCTION
	1C=Normally Closed
	1A=Normally Open

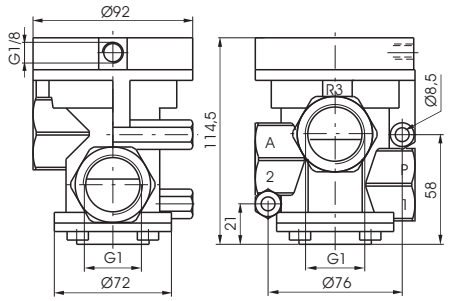

Weight gr. 1060
Minimum piloting pressure 2 bar

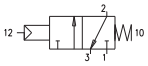

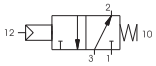

Operational characteristic	Fluid	Temperature °C	Orifice size (mm)	Working ports size	Pilot ports size
	Vacuum	-5 - + 70	25	G 1"	G 1/8"

Solenoid - Spring - Internal Pilot

Ordering code

771/V.32.0.Ⓕ.M2/V

Ⓕ	FUNCTION
	1AA=Normally Open
	1AC=Normally Closed

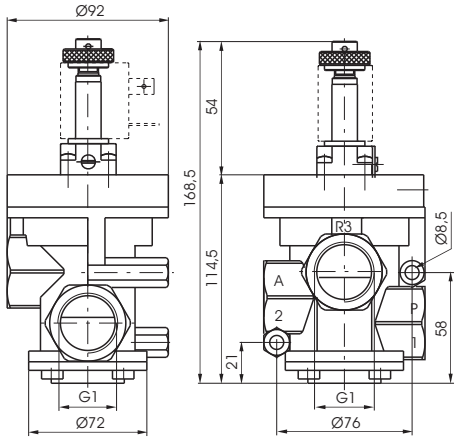

Weight gr. 1120

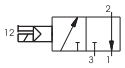

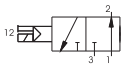

Operational characteristic	Fluid	Temperature °C	Orifice size (mm)	Working ports size	Pilot ports size
	Vacuum	-5 - + 50	25	G 1"	G 1/8"

Solenoid - Spring - External Pilot

Ordering code

771/V.32.0.Ⓕ.M2

Ⓕ	FUNCTION
	1A=Normally Open
	1C=Normally Closed

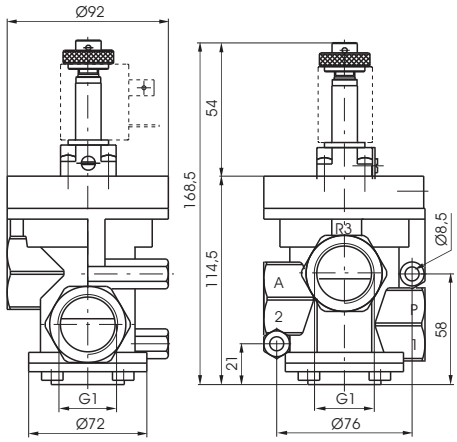

Weight gr. 1120
Minimum piloting pressure 2 bar (External Pilot)

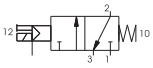

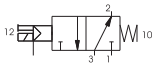

Operational characteristic	Fluid	Temperature °C	Orifice size (mm)	Working ports size	Pilot ports size
	Vacuum	-5 - + 50	25	G 1"	G 1/8"

Pneumatic - Spring

Ordering code
776.22.11.1C

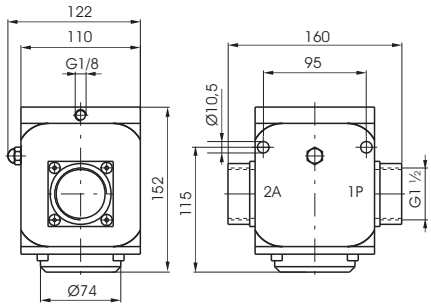

Weight gr. 3950
Normally Closed
Minimum piloting pressure 2,5 bar

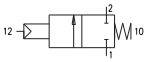

Operational characteristic	Fluid	Max working pressure (bar)	Temperature °C	Flow rate at 6 bar with Δp=1 (Nl/min)	Orifice size (mm)	Working ports size	Pilot ports size
	Filtered and lubricated air	10	-5 - +70	33500	38	G1 1/2"	G 1/8"

Solenoid - Spring

Ordering code	
776.22.0.Ⓕ.Ⓢ	
Ⓕ	FUNCTION
	1AC=Internal Pilot Normally Closed
	1C=External Pilot Normally Closed
Ⓢ	SOLENOID CODE
	See Valves Series 300 Type "S"

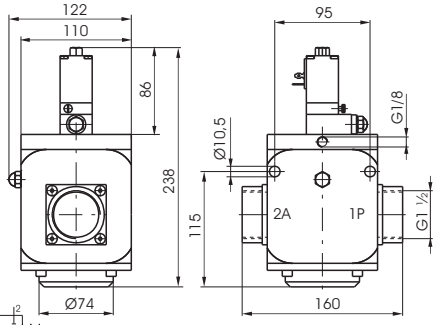

Weight gr. 4450
Minimum piloting pressure 2,5 bar (External Pilot) - 3 bar (Internal Pilot)

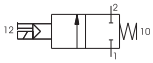

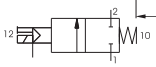

Operational characteristic	Fluid	Max working pressure (bar)	Temperature °C	Flow rate at 6 bar with Δp=1 (Nl/min)	Orifice size (mm)	Working ports size	Pilot ports size
	Filtered and lubricated air	10	-5 - +50	33500	38	G1 1/2"	G 1/8"

Pneumatic - Spring

Ordering code
776.32.11.1C

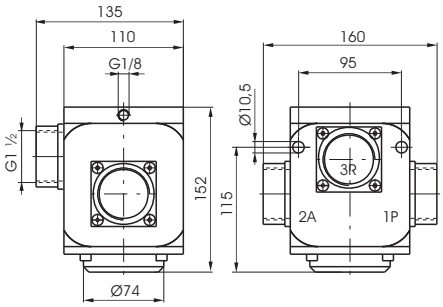

Weight gr. 3900
Normally Closed
Minimum piloting pressure 2,5 bar

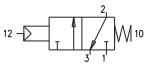

Operational characteristic	Fluid	Max working pressure (bar)	Temperature °C	Flow rate at 6 bar with Δp=1 (Nl/min)	Orifice size (mm)	Working ports size	Pilot ports size
	Filtered and lubricated air	10	-5 - +70	33500	38	G1 1/2"	G 1/8"

Solenoid - Spring

Ordering code	
776.32.0.Ⓕ.Ⓢ	
Ⓕ	FUNCTION
	1AC=Internal Pilot Normally Closed
	1C=External Pilot Normally Closed
Ⓢ	SOLENOID CODE
	See Valves Series 300 Type "S"

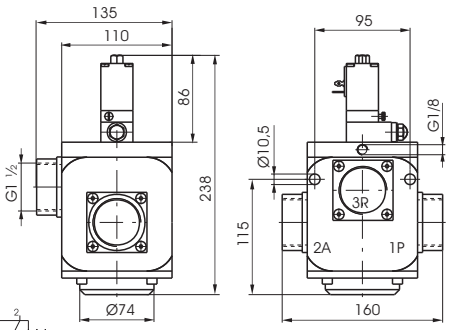

Weight gr. 4450
Minimum piloting pressure 2,5 bar (External Pilot) - 3 bar (Internal Pilot)

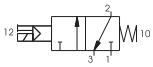

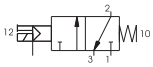

Operational characteristic	Fluid	Max working pressure (bar)	Temperature °C	Flow rate at 6 bar with Δp=1 (Nl/min)	Orifice size (mm)	Working ports size	Pilot ports size
	Filtered and lubricated air	10	-5 - +50	33500	38	G1 1/2"	G 1/8"

2

Pneumatic - Spring

Ordering code

776/V.22.11.1C

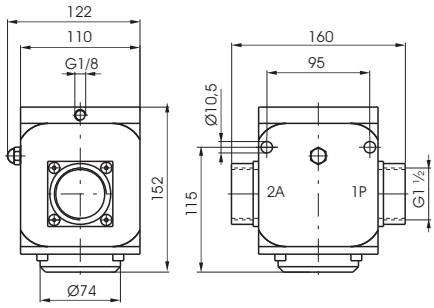

Weight gr. 3950
Normally Closed
Minimum piloting pressure 2 bar

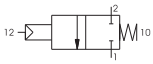

Operational characteristic	Fluid	Temperature °C	Orifice size (mm)	Working ports size	Pilot ports size
	Vacuum	-5 - + 70	38	G1 1/2"	G 1/8"

Solenoid - Spring

Ordering code

776/V.22.0.1C.Ⓢ

Ⓢ	SOLENOID CODE
	See Valves Series 300 Type "S"

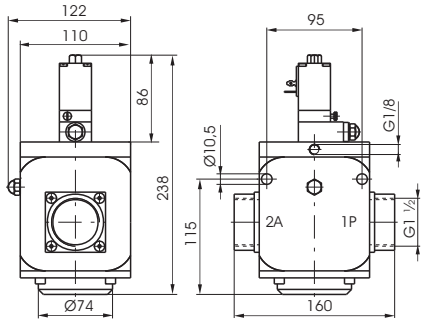

Weight gr. 4450
External Pilot Normally Closed
Minimum piloting pressure 2 bar

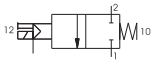

Operational characteristic	Fluid	Temperature °C	Orifice size (mm)	Working ports size	Pilot ports size
	Vacuum	-5 - + 50	38	G1 1/2"	G 1/8"

Pneumatic - Spring

Ordering code

776/V.32.11.Ⓕ

Ⓕ	FUNCTION
	1C=Normally Closed
	1A=Normally Open

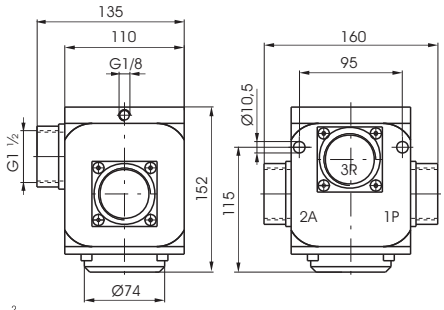

Weight gr. 3900
Minimum piloting pressure 2 bar

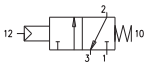

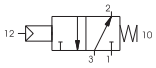

Operational characteristic	Fluid	Temperature °C	Orifice size (mm)	Working ports size	Pilot ports size
	Vacuum	-5 - + 70	38	G1 1/2"	G 1/8"

Solenoid - Spring

Ordering code

776/V.32.0.Ⓕ.Ⓢ

	FUNCTION
Ⓕ	1C=External Pilot Normally Closed
	1A=External Pilot Normally Open
Ⓢ	SOLENOID CODE
	See Valves Series 300 Type "S"

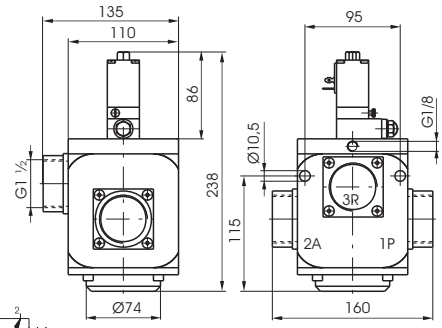

Weight gr. 4500
Minimum piloting pressure 2 bar

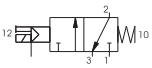

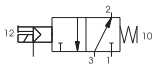

Operational characteristic	Fluid	Temperature °C	Orifice size (mm)	Working ports size	Pilot ports size
	Vacuum	-5 - + 50	38	G1 1/2"	G 1/8"

General

This new range of G1/2” and G3/4” pilot and solenoid operated poppet valves represents an evolution of the current popular Zama series. The main feature of this new series is the high impact resistant thermoplastic used to mould the valve components.
The use of this materiel results in a versatile, lightweight and economical valve. The new series also has other technical and functional enhancements over the existing range. Firstly, the traditional piston lip seal has been replaced with a rolling diaphragm, thereby eliminating frictional wear and tear to this seal. The new series (with the exception of certain vacuum models) also features a seal, which separates port 3 from the piston head. The inclusion of this seal has enhanced the valve’s performance and allows the valve to be used as normally open (a configuration not possible in the Zama series).
Solenoid operated valves (both internal and external pilot versions) are fitted with a quick exhaust unit, which reduces the return stroke operating time by 60%. The bulk of the valves in this series use the MP type operator, the exception being internally piloted vacuum models, which use the MV operator. These operators differ from the M2 type in that they have self-tapping mounting screws for use in plastics.
Coils are not included and have to be ordered separately (series 300, Section 1, General Catalogue), with the exception of the bistable versions which already include 24V Dc Coils (N331.0A).

Coils C US homologated are also available. (see series 300).

Construction characteristics

Body, operator and end cover	High resistance technopolymer
Seals and poppets	Oil resistant rubber (NBR)
Piston and shaft	Acetal resin
Springs	AISI 302 stainless steel
Diaphragm	Oil resistant rubber coated (NBR)

Use and mainutenance

These valves have a mean life of 10 to 15 million cycles under normal operating conditions.
Lubrication is not required for good operation but we recommend good filtration to avoid dirty deposit causing malfunction.
Check that the operating conditions: pressure, temperature and so on are as suggested.
The exhaust port of the distributor has to be protected in a dusty and dirty environment.
For these products, according to the construction technique and special application, is not required any maintenance with parts replacement. When necessary it is sufficient to clean the internal parts.
When it is used the solenoid valves with internal pilot, either for air or vacuum, inlet flow rate must be equal or higher that the required consumption flow rate, otherwise is better choose the external pilot version.

Air valve port layout:

Normally closed:
1 = LINE IN
2 = CONSUMPTION
3 = EXHAUST

Normally open:
1 = EXHAUST
2 = CONSUMPTION
3 = LINE IN

Vacuum valve port layout:

Normally closed internal pilot
Normally open (servoassisted) external pilot
1 = EXHAUST
2 = CONSUMPTION
3 = PUMP

Normally open internal pilot
Normally closed (servoassisted) external pilot
1 = PUMP
2 = CONSUMPTION
3 = EXHAUST

MINIMUM WORKING PRESSURE DIAGRAM (Valves for compressed air)
PNEUMATIC/SPRING AND EXTERNAL SOLENOID PILOT VERSION

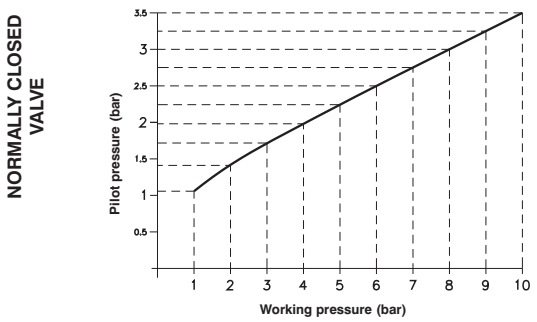

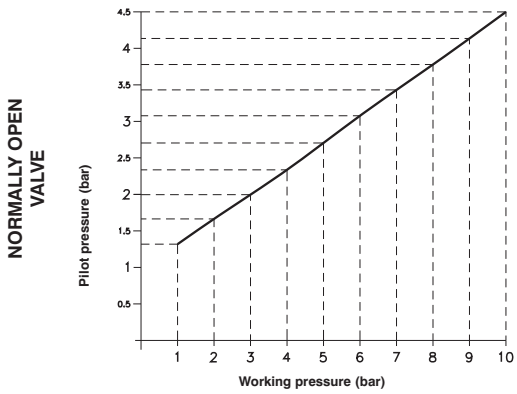

Valve
Pneumatic spring

3/2

Ordering code

T772.32.11.1

Normally closed

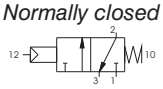

Normally open

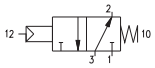

Weight gr. 350

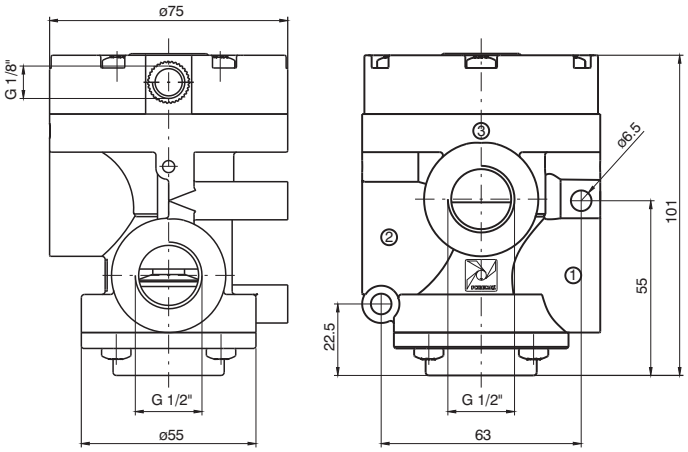

Minimum piloting pressure: see diagram at General page

Solenoid valve
Solenoid spring

3/2

Weight gr. 390

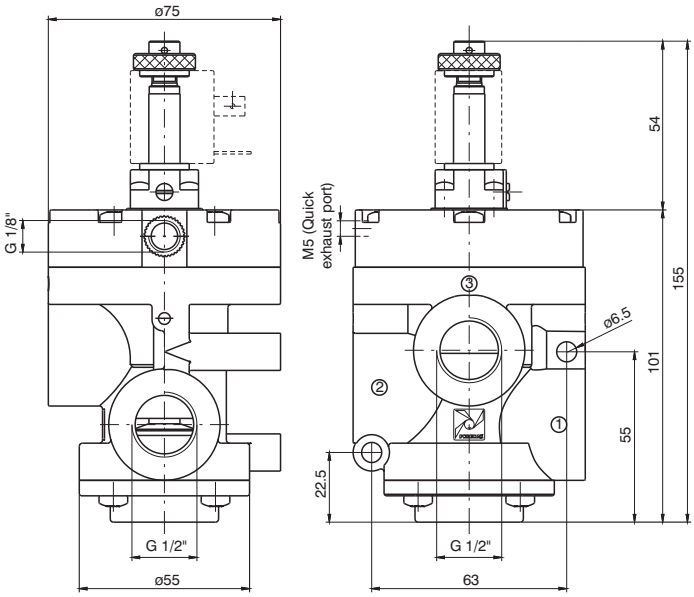

Ordering code

Internal pilot	*Servoassisted external pilot*	*Internal pilot with quick exhaust*	*Servoassisted external pilot with quick exhaust*
T772.32.0.1AC.MP *Normally closed* 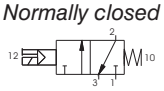 **T772.32.0.1AA.MP** *Normally open* 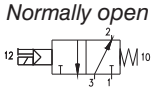 Minimum piloting pressure: 2.5 bar	**T772.32.0.1.MP** *Normally closed* 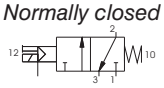 *Normally open* 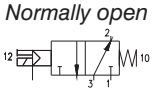 Minimum piloting pressure: see diagram at General page	**T772S.32.0.1AC.MP** *Normally closed* 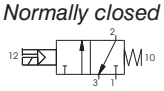 **T772S.32.0.1AA.MP** *Normally open* 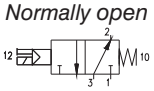 Minimum piloting pressure: 2.5 bar	**T772S.32.0.1.MP** *Normally closed* 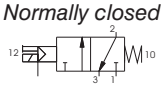 *Normally open* 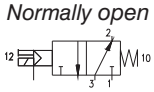 Minimum piloting pressure: see diagram at General page

Operational characteristics	Fluid	Max working pressure	Operating temperature min.	Operating temperature max.	Flow rate at 6 bar with Δp = 1 bar	Orifice size	Inlet port size	Pilot ports size
	Filtered and lubricated or non lubricated air	10 bar	-5° C	+50°C	4100 Nl/min	mm 15	G 1/2"	G 1/8"

Valve
Pneumatic spring

3/2

Ordering code

T772/V.32.11.1

Normally open

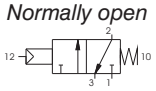

Normally closed

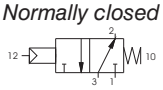

Weight gr. 350

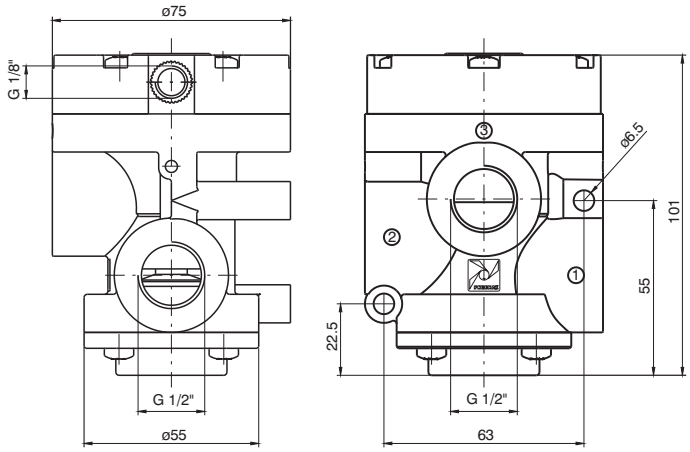

Minimum piloting pressure: 2,5 bar

Solenoid valve
Solenoid spring

3/2

Weight gr. 390

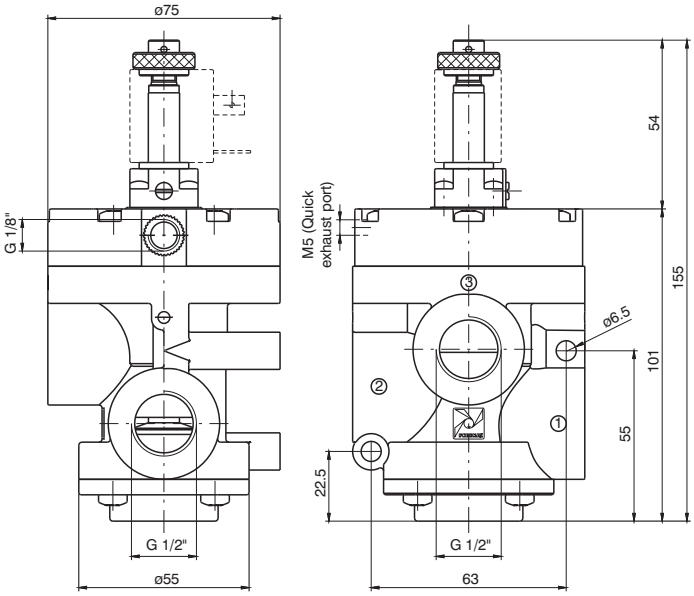

Ordering code

Internal pilot	*Servoassisted external pilot*	*Servoassisted external pilot with quick exhaust*
T772/V.32.0.1AA.MV *Normally open* 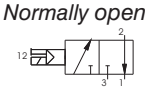 **T772/V.32.0.1AC.MV** *Normally closed* 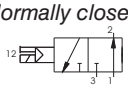	**T772/V.32.0.1.MP** *Normally open* 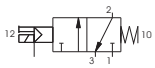 *Normally closed* 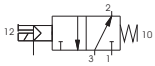	**T772/VS.32.0.1.MP** *Normally open* 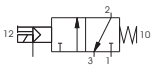 *Normally closed* 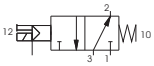

Minimum piloting pressure: 2.5 bar

Operational characteristics	Fluid	Operating temperature min.	Operating temperature max.	Orifice Size	Inlet port size	Pilot ports size
	Vacuum	-5°C	+50°C	mm 15	G 1/2"	G 1/8"

Valve
Pneumatic spring

3/2

Ordering code

T773.32.11.1

Normally closed

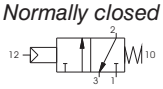

Normally open

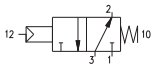

Weight gr. 330

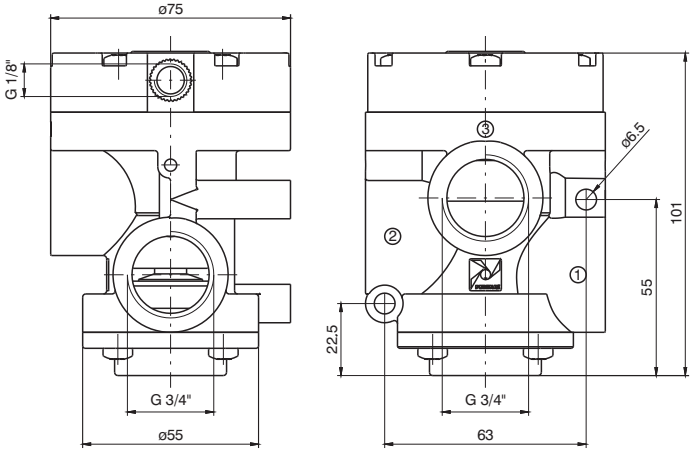

Minimum piloting pressure: see diagram at General page

Solenoid valve
Solenoid spring

3/2

Weight gr. 370

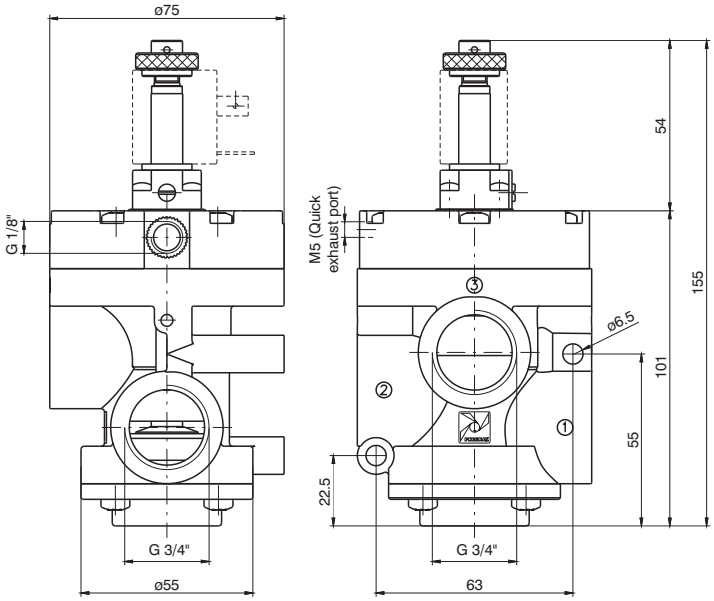

Ordering code

Internal pilot	*Servoassisted external pilot*	*Internal pilot with quick exhaust*	*Servoassisted external pilot with quick exhaust*
T773.32.0.1AC.MP *Normally closed* 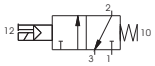	**T773.32.0.1.MP** *Normally closed* 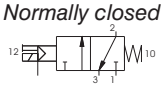	**T773S.32.0.1AC.MP** *Normally closed* 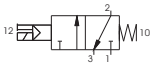	**T773S.32.0.1.MP** *Normally closed* 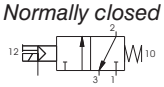
T773.32.0.1AA.MP *Normally open* 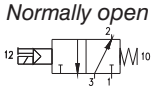	*Normally open* 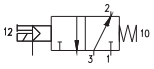	**T773S.32.0.1AA.MP** *Normally open* 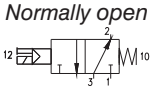	*Normally open* 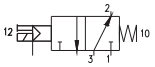
Minimum piloting pressure: 2.5 bar	Minimum piloting pressure: see diagram at General page	Minimum piloting pressure: 2.5 bar	Minimum piloting pressure: see diagram at General page

	Fluid	Max piloting pressure	Operating temperature min.	Operating temperature max.	Flow rate at 6 bar with Δp = 1 bar	Orifice size	Inlet port size	Pilot ports size
Operational characteristics	Filtered and lubricated or non lubricated air	10 bar	-5° C	+50°C	6400 Nl/min	mm 20	G 3/4"	G 1/8"

Valve
Pneumatic spring

3/2

Ordering code

T773/V.32.11.1

Normally open

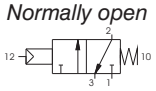

Normally closed

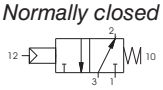

Weight gr. 330

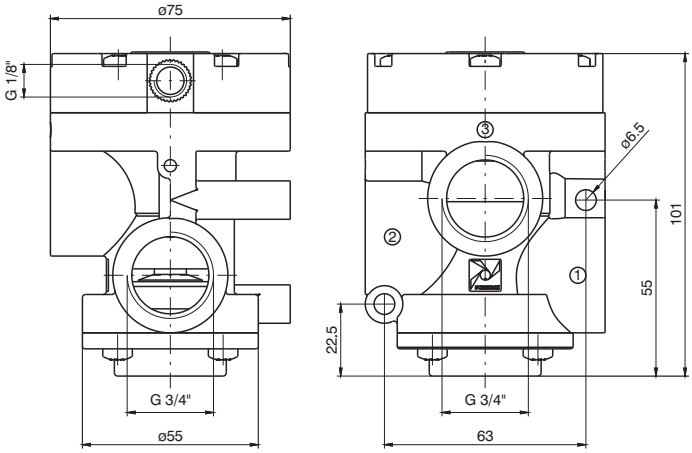

Minimum piloting pressure: 2,5 bar

Solenoid valve
Solenoid spring

3/2

Weight gr. 370

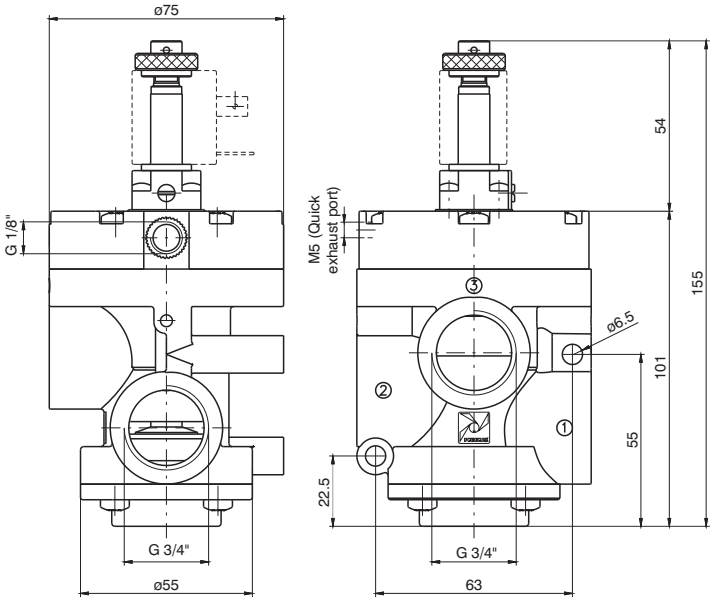

Ordering code

Internal pilot	*Servoassisted external pilot*	*Servoassisted external pilot with quick exhaust*
T773/V.32.0.1AA.MV *Normally open* 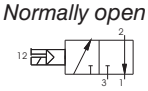 **T773/V.32.0.1AC.MV** *Normally closed* 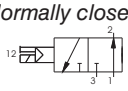	**T773/V.32.0.1.MP** *Normally open* 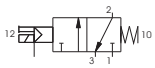 *Normally closed* 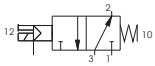	**T773/VS.32.0.1.MP** *Normally open* 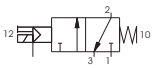 *Normally closed* 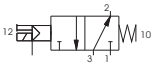

Minimum piloting pressure: 2.5 bar

Operational characteristics	Fluid	Operating temperature min.	Operating temperature max.	Orifice Size	Inlet port size	Pilot ports size
	Vacuum	-5°C	+50°C	mm 20	G 3/4"	G 1/8"

2

Bistable version for Compressed air

3/2

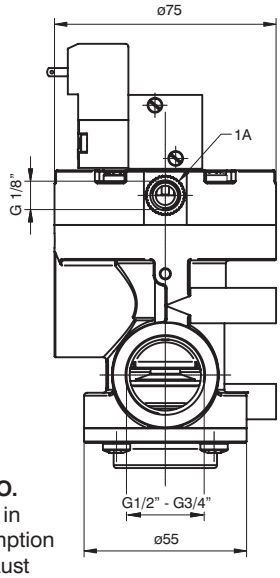

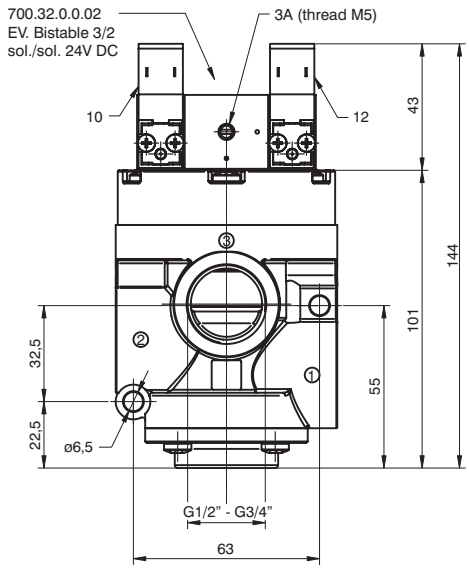

Air - N.C.
1 = line in
2 = consumption
1 = exhaust

Air - N.O.
3 = line in
2 = consumption
1 = exhaust

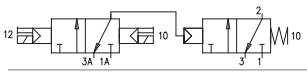

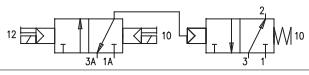

Weight gr. 550

Ordering code

G 1/2”	G 3/4”	G ½” (with quick exhaust)	G 3/4” (with quick exhaust)
T772.32.0.1BP *Normally closed* *Normally open*	**T773.32.0.1.BP** *Normally closed* *Normally open*	**T772S.32.0.1.BP** *Normally closed* *Normally open*	**T773S.32.0.1.BP** *Normally closed* *Normally open*

	Fluid	Max piloting pressure	Min. Pilot pressure	Temperature min.	Temperature max.	Flow rate at 6 bar with Δp = 1 bar	Orifice Size	piloting port size	Pilot ports size
Operational characteristics	Filtered and lubricated or non lubricated air	10 bar	2 bar	-5° C	+50°C	G1/2”: 4100 Nl/min G3/4”: 6400 Nl/min	mm 15	G 1/2" G 3/4”	G 1/8"

Bistable version for Vacuum

3/2

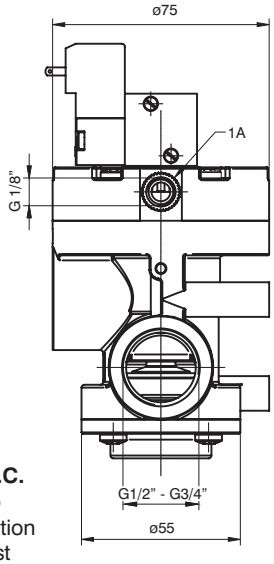

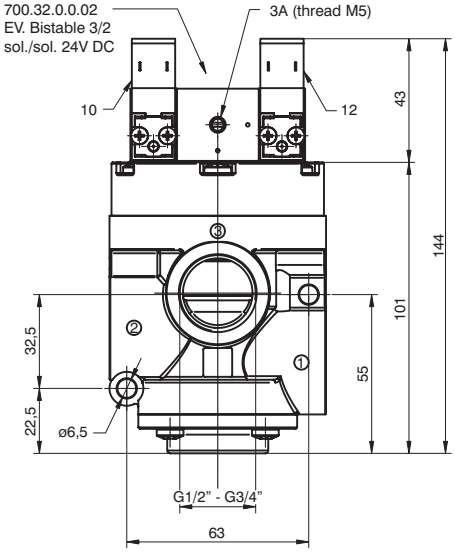

Vacuum - N.O.
3 = pump
2 = consumption
1 = exhaust

Vacuum - N.C.
1 = pump
2 = consumption
3 = exhaust

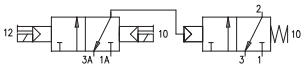

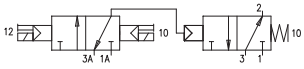

Weight gr. 550

Ordering code

G 1/2”	G 3/4”	G ½” (with quick exhaust)	G 3/4” (with quick exhaust)
T772/V.32.0.1BP *Normally closed* *Normally open*	**T773/V.32.0.1.BP** *Normally closed* *Normally open*	**T772/VS.32.0.1.BP** *Normally closed* *Normally open*	**T773/VS.32.0.1.BP** *Normally closed* *Normally open*

	Fluid	Min. Pilot pressure	Temperature min.	Temperature max.	Orifice Size	Inlet port size	Pilot ports size
Operational characteristics	Vacuum	2,5 bar	-5° C	+50°C	mm 15	G 1/2" G 3/4”	G 1/8"

General

This new range of G1” pilot and solenoid operated poppet valves represents an evolution of the current popular Zama series and of the series T772-T773 (G1/2" - 3/4").
Also for this series the main feature is the technopolimer material used to mould most of its components. The use of this materiel results in a versatile, lightweight and economical valve.
The new series also has other technical and functional enhancements over the existing range. Firstly, the traditional piston lip seal has been replaced with a rolling diaphragm, thereby eliminating frictional wear and tear to this seal. The new series (with the exception of certain vacuum models) also features a seal, which separates port 3 from the piston head. The inclusion of this seal has enhanced the valve’s performance and allows the valve to be used as normally open (a configuration not possible in the Zama series).
Solenoid operated valves (both internal and external pilot versions) are fitted with a quick exhaust unit, which reduces the return stroke operating time by 80%. The bulk of the valves in this series use the MP type operator, the exception being internally piloted vacuum models, which use the MV operator. These operators differ from the M2 type in that they have self-tapping mounting screws for use in plastics.
Bistable versions are also available, both for air or for vacuum. These valves are fitted with a 3/2 sol-sol valve (instead of the standard pilot valve) fitted with two 15mm 24V Dc microvalves (N331.0A).Ordering codes refer to solenoid valves with MP or MV assembled on them.
Coils are not included and have to be ordered separately (series 300, Section 1, General Catalogue), with the exception of the bistable versions which already include 24V Dc Coils (N331.0A).

Coils C UL US homologated are also available (see series 300).

Construction characteristics

Body, operator and end cover	High resistance technopolymer
Seals and poppets	NBR
Piston and shaft	Acetal resin
Springs	AISI 302 stainless steel
Diaphragm	NBR

Use and mainutenance

These valves have a mean life of 10 to 15 million cycles under normal operating conditions.
Lubrication is not required for good operation but we recommend good filtration to avoid dirty deposit causing malfunction.
Check that the operating conditions: pressure, temperature and so on are as suggested.
The exhaust port of the distributor has to be protected in a dusty and dirty environment.
For these products, according to the construction technique and special application, is not required any maintenance with parts replacement. When necessary it is sufficient to clean the internal parts.
When it is used the solenoid valves with internal pilot, either for air or vacuum, inlet flow rate must be equal or higher that the required consumption flow rate, otherwise is better choose the external pilot version.

Air valve port layout:

Normally closed:
1 = LINE IN
2 = CONSUMPTION
3 = EXHAUST

Normally open:
1 = EXHAUST
2 = CONSUMPTION
3 = LINE IN

Vacuum valve port layout:

Normally closed internal pilot
Normally open (servoassisted) external pilot
1 = EXHAUST
2 = CONSUMPTION
3 = PUMP

Normally open internal pilot
Normally closed (servoassisted) external pilot
1 = PUMP
2 = CONSUMPTION
3 = EXHAUST

MINIMUM piloting PRESSURE DIAGRAM (Valves for compressed air)

PNEUMATIC/SPRING AND EXTERNAL SOLENOID PILOT VERSION

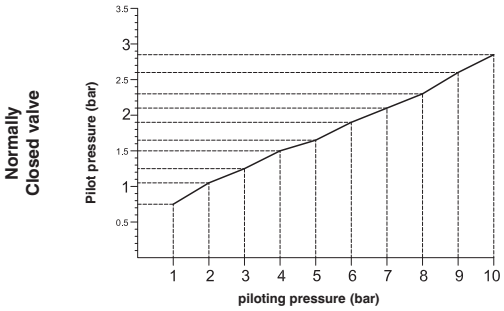

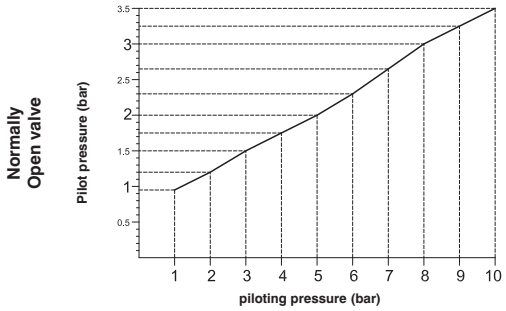

Valve
Pneumatic spring

3/2

Ordering code

T771.32.11.1

Normally closed

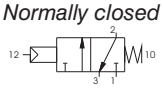

Normally open

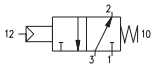

Weight gr. 480

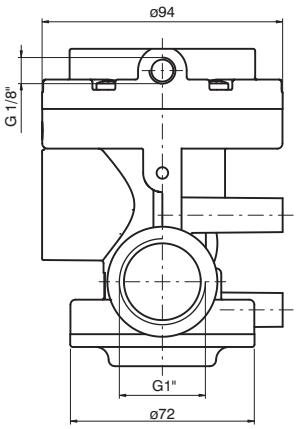

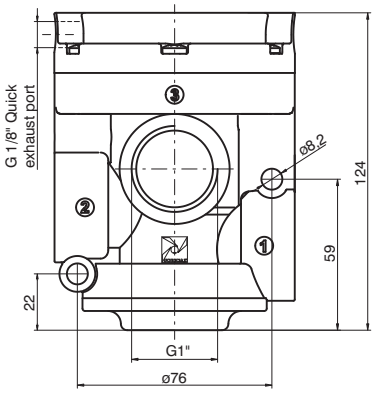

Minimum piloting pressure: see diagram at General page

Solenoid valve
Solenoid spring

3/2

Weight gr. 520

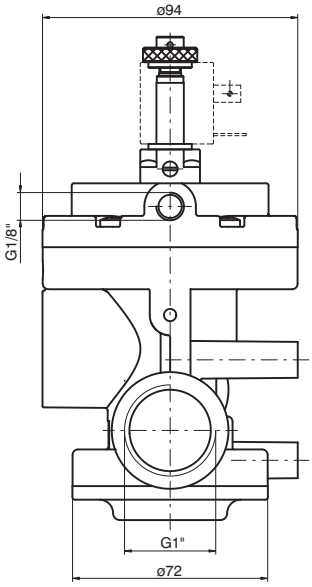

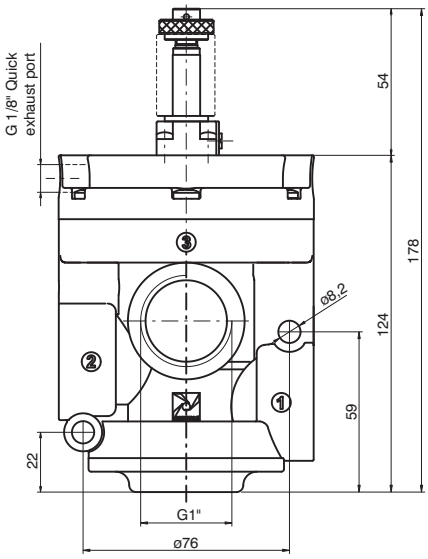

Ordering code

Internal pilot	*Servoassisted external pilot*	*Internal pilot with quick exhaust*	*Servoassisted external pilot with quick exhaust*
T771.32.0.1AC.MP *Normally closed* 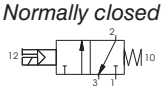 **T771.32.0.1AA.MP** *Normally open* 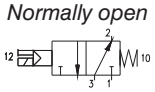	**T771.32.0.1.MP** *Normally closed* 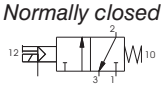 *Normally open* 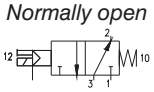	**T771S.32.0.1AC.MP** *Normally closed* 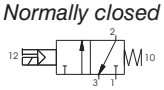 **T771S.32.0.1AA.MP** *Normally open* 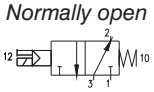	**T771S.32.0.1.MP** *Normally closed* 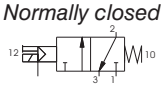 *Normally open* 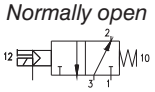
Minimum piloting pressure: 2,5 bar	Minimum piloting pressure: see diagram at General page	Minimum piloting pressure: 2,5 bar	Minimum piloting pressure: see diagram at General page

	Fluid	Max piloting pressure	Operating temperature min.	Operating temperature max.	Flow rate at 6 bar with Δp = 1 bar	Orifice size	Inlet port size	Pilot ports size
Operational characteristics	Filtered and lubricated or non lubricated air	10 bar	-5° C	+50°C	12.000 Nl/min	mm 25	G 1”	G 1/8"

Valve
Pneumatic spring

3/2

Ordering code

T771/V.32.11.1

Normally open

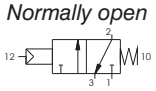

Normally closed

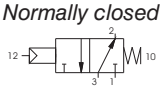

Weight gr. 480

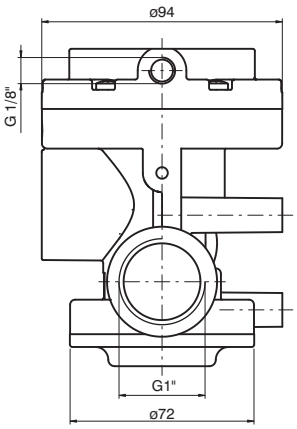

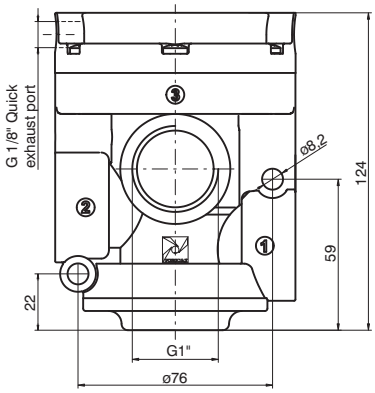

Minimum piloting pressure: 2 bar

Solenoid valve
Solenoid spring

3/2

Weight gr. 520

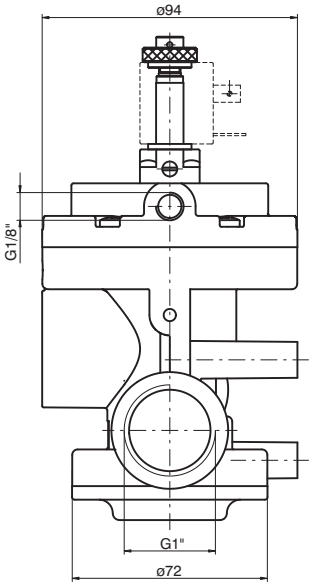

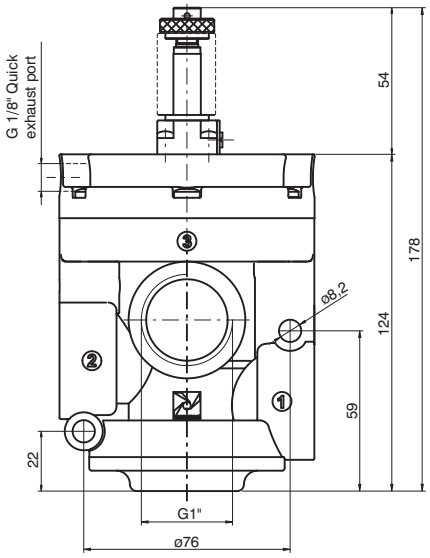

Ordering code

Internal pilot	*Servoassisted external pilot*	*Servoassisted external pilot with quick exhaust*
T771/V.32.0.1AA.MV *Normally open* 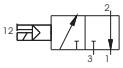 **T771/V.32.0.1AC.MV** *Normally closed* 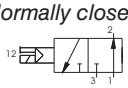	**T771/V.32.0.1.MP** *Normally open* 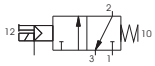 *Normally closed* 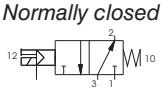	**T771/VS.32.0.1.MP** *Normally open* 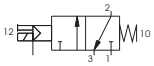 *Normally closed* 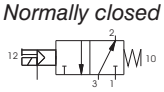

Minimum piloting pressure: 2 bar

	Fluid	Temperature		Orifice size	Inlet port size	Pilot ports size
		min.	max.			
Operational characteristics	Vacuum	-5°C	+50°C	mm 25	G 1"	G 1/8"

2

Bistable version for Compressed air

3/2

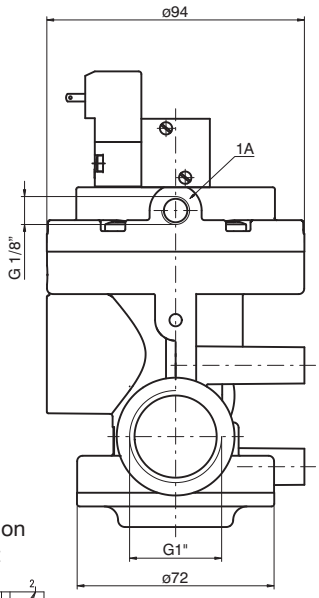

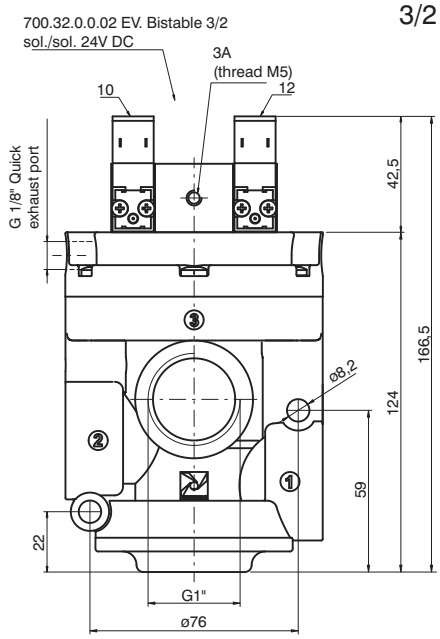

Air - N.C.
1 = line in
2 = consumption
3 = exhaust

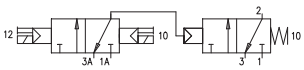

Air - N.O.
3 = line in
2 = consumption
1 = exhaust

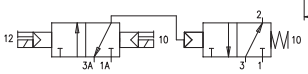

Weight gr. 680

Ordering code

	with quick exhaust
T771.32.0.1BP *Normally closed / Normally open*	**T771S.32.0.1.BP** *Normally closed / Normally open*

	Fluid	Max piloting pressure	Minumum piloting pressure	Operating temperature min.	Operating temperature max.	Flow rate at 6 bar with Δp = 1 bar	Orifice size	inlet port size	Pilot ports size
Operational characteristics	Filtered and lubricated air	10 bar	2,5 bar	-5° C	+50°C	12.000 Nl/min	mm 25	G 1”	G 1/8"

Bistable version for Vacuum

3/2

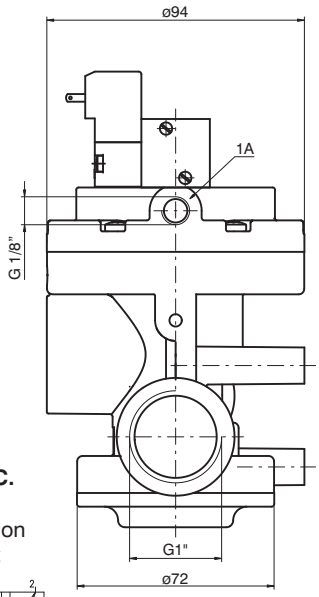

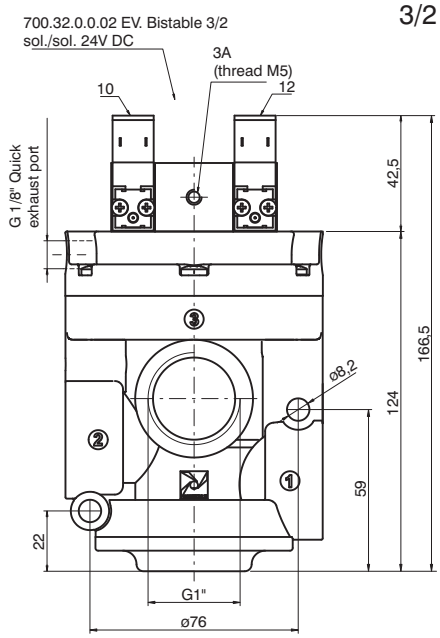

Vacuum - N.O.
3 = pump
2 = consumption
1 = exhaust

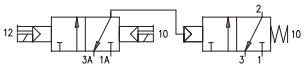

Vacuum - N.C.
1 = pump
2 = consumption
3 = exhaust

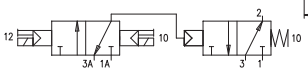

Weight gr. 680

Ordering code

	with quick exhaust
T771/V.32.0.1BP *Normally closed / Normally open*	**T771/VS.32.0.1.BP** *Normally closed / Normally open*

	Fluid	Minumum piloting pressure	Temperature min.	Temperature max.	Orifice size	Inlet port size	Pilot ports size
Operational characteristics	Vacuum	2,5 bar	-5° C	+50°C	mm 25	G 1”	G 1/8"

General

The N776 G1.1/2" series of valves and solenoid operated poppet valves is the result of the technical evolution of the 776 series. A rolling diaphragm construction has replaced the previously used piston design ensure lower frictions and longer life.
Connection 3 is isolated via a dedicated seal which allow to have the N.O. version as well as the self feed for vacuum which was not available on the 776 series.
The pilot valves are the M3R (CNOMO Stile) with bistable manual override.

Coils are not included and have to be ordered separately (see 300 series, 22mm MB coils and 30mm CNOMO MC coils).

Coils C RU US homologated are also available. (series 300).

Construction characteristics

Body, operator and end cover:	Die casting Aluminium
Seals and poppets:	NBR oil resistant rubber
Piston:	Aluminium (for Air) - Acetylic resin (for Vacuum)
Pin guide:	Nickel plated steel
Spring:	Steel
Diaphragm:	NBR oil resistant rubber

Use and mainutenance

These valves have a mean life of 10 to 15 million cycles under normal operating conditions.
Lubrication is not required for good operation but we recommend good filtration to avoid dirty deposit causing malfunction.
Check that the operating conditions: pressure, temperature and so on are as suggested.
The exhaust port of the distributor has to be protected in a dusty and dirty environment.
For these products, according to the construction technique and special application, is not required any maintenance with parts replacement. When necessary it is sufficient to clean the internal parts.
When it is used the solenoid valves with internal pilot, either for air or vacuum, inlet flow rate must be equal or higher that the required consumption flow rate, otherwise is better choose the external pilot version.

Air valves port layout:		**Vacuum valves port layout:**	
Normally Closed:	1=LINE IN 2=CONSUMPTION 3=EXHAUST	Normally Closed internal Pilot Normally Open (servoassisted) external pilot	1=EXHAUST 2=CONSUMPTION 3=PUMP
Normally Open:	1=EXHAUST 2=CONSUMPTION 3=LINE IN	Normally Open internal Pilot Normally Closed servoassisted) external pilot	1=PUMP 2=CONSUMPTION 3=EXHAUST

Minumum working pressure diagram for external pilot versions Normally Closed & Normally Open

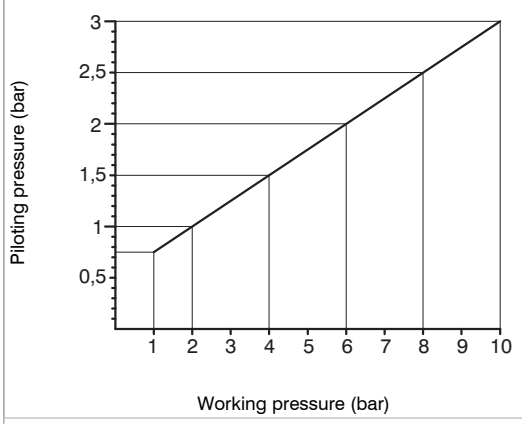

2

Pneumatic - Spring

Ordering code

N776.22.11.1C

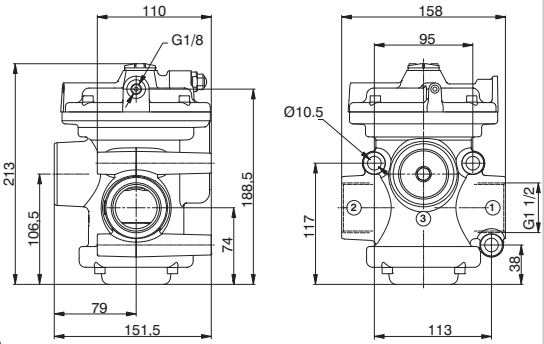

Weight gr.3560
Normally Closed
Minimum piloting pressur "See diagram on the General page"

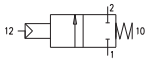

Operational characteristics	Fluid	Temperature °C	Max working pressure (bar)	Flow rate at 6 bar with Δp=1 (Nl/min)	Orifice size (mm)	Working ports size	Pilot ports size
	Filtered and lubricated air or non	-5 ÷ +70	10	33500	38	G1 1/2"	G1/8"

Solenoid - Spring

Ordering code

N776.22.0.Ⓕ.M3R

	FUNCTION
Ⓕ	1AC=Internal Pilot Normally Closed
	1C=External Pilot Normally Closed

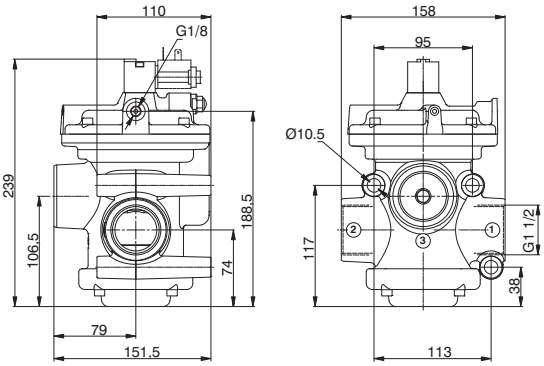

Weight gr.3620
Minimum piloting pressure: Servoassisted external pilot version, "See diagram on the General page" / 3,5 bar Internal pilot version,

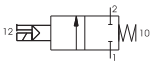

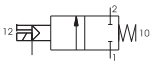

Operational characteristics	Fluid	Temperature °C	Max working pressure (bar)	Flow rate at 6 bar with Δp=1 (Nl/min)	Orifice size (mm)	Working ports size	Pilot ports size
	Filtered and lubricated air or non	-5 ÷ +50	10	33500	38	G1 1/2"	G1/8"

Pneumatic - Spring

Ordering code

N776.32.11.1

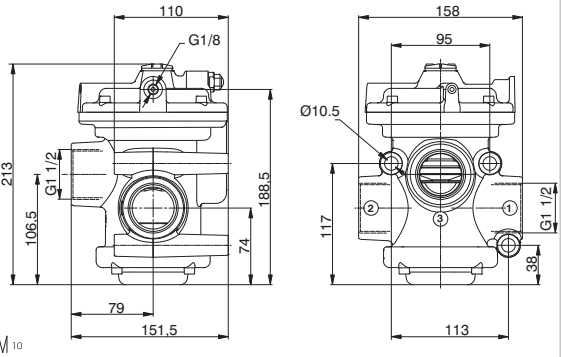

Weight gr.3550
Normally Closed / Normally open
Minimum piloting pressur "See diagram on the General page"

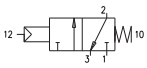

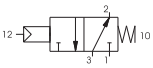

Operational characteristics	Fluid	Temperature °C	Max working pressure (bar)	Flow rate at 6 bar with Δp=1 (Nl/min)	Orifice size (mm)	Working ports size	Pilot ports size
	Filtered and lubricated air or non	-5 ÷ +70	10	33500	38	G1 1/2"	G1/8"

Solenoid - Spring

Ordering code

N776.32.0.Ⓕ.M3R

	FUNCTION
Ⓕ	1AC=Internal Pilot Normally Closed
	1AA=Internal Pilot Normally Open
	1=External Pilot Normally Closed-Normally Open

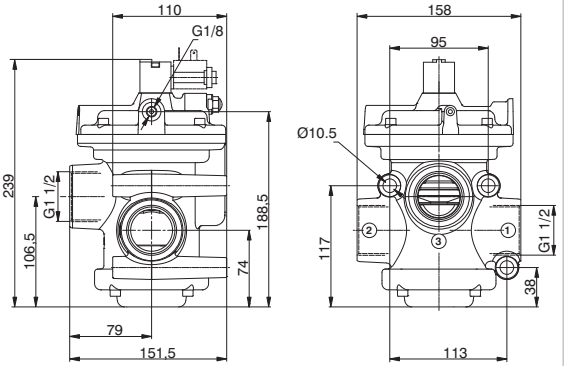

Weight gr.3610
Minimum piloting pressure: Servoassisted external pilot "See diagram on the General page" / 3,5 bar Internal pilot version,

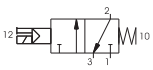

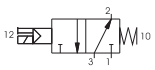

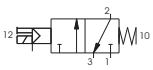

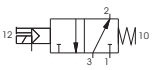

Operational characteristics	Fluid	Temperature °C	Max working pressure (bar)	Flow rate at 6 bar with Δp=1 (Nl/min)	Orifice size (mm)	Working ports size	Pilot ports size
	Filtered and lubricated air or non	-5 ÷ +50	10	33500	38	G1 1/2"	G1/8"

Pneumatic - Spring

Ordering code
N776/V.22.11.1C

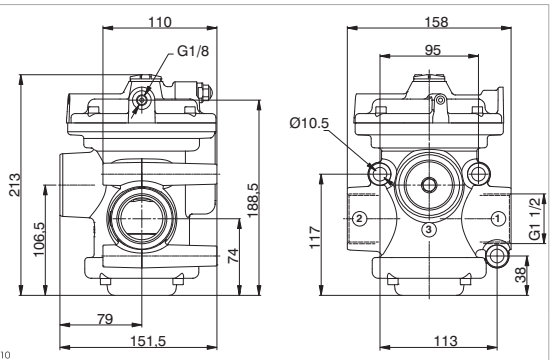

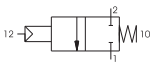

Weight gr.3178
Normally Closed
Minimum piloting pressur 2 bar

Operational characteristics	Fluid	Temperature °C	Orifice size (mm)	Working ports size	Pilot ports size
	Vacuum	-5 ÷ +70	38	G1 1/2"	G1/8"

Solenoid - Spring

Ordering code
N776/V.22.0.Ⓕ.M3R

	FUNCTION
Ⓕ	1AC=Internal Pilot Normally Closed
	1C=External Pilot Normally Closed

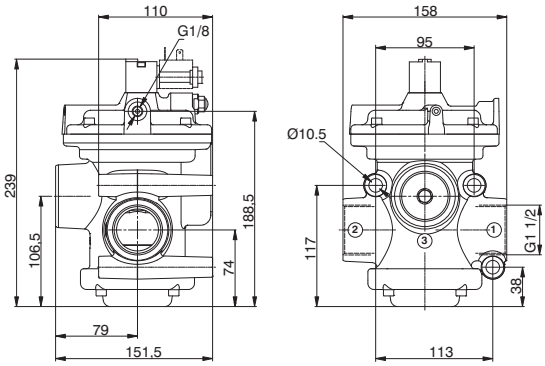

Weight gr.3238
Minimum piloting pressure 2 bar

Operational characteristics	Fluid	Temperature °C	Orifice size (mm)	Working ports size	Pilot ports size
	Vacuum	-5 ÷ +50	38	G1 1/2"	G1/8"

Pneumatic - Spring

Ordering code
N776/V.32.11.1

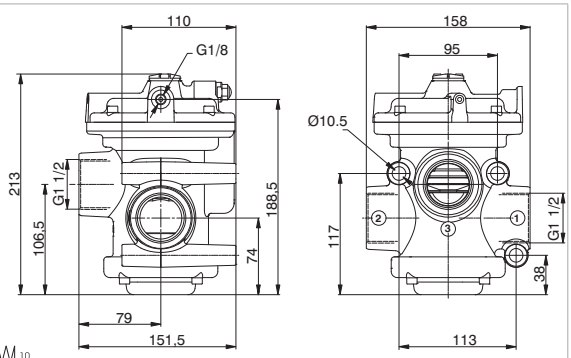

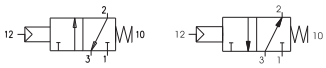

Weight gr.3168
Normally Closed / Normally open
Minimum piloting pressur 2 bar

Operational characteristics	Fluid	Temperature °C	Orifice size (mm)	Working ports size	Pilot ports size
	Vacuum	-5 ÷ +70	38	G1 1/2"	G1/8"

Solenoid - Spring

Ordering code
N776/V.32.0.Ⓕ.M3R

	FUNCTION
Ⓕ	1AC=Internal Pilot Normally Closed
	1AA=Internal Pilot Normally Open
	1=External Pilot Normally Closed-Normally Open

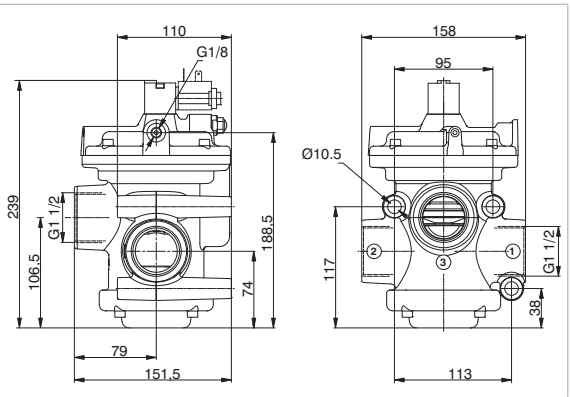

Weight gr.3228
Minimum piloting pressure 2 bar

Operational characteristics	Fluid	Temperature °C	Orifice size (mm)	Working ports size	Pilot ports size
	Vacuum	-5 ÷ +50	38	G1 1/2"	G1/8"

General

Pad Valves offer a reliable and economic solution to fluid control.
The valve is manufactured with a 2 way Bronze body and actuated pneumatically using either a single or double acting compact cylinder which can be rotated 360°.

Versions are available with NBR, FPM or PTFE valve seals.

The barrel profile allows the use of magnetic sensors code "1500._" , "RS._" , "HS._", for slots "A" type.
(see the Pneumax Genaral catalogue, chapter 4).

Construction characteristics

Rear eye, Piston and Rod bushing	Anodized aluminium
Cylinder	Aluminium alloy Anodized
Spring	Zinc plated steel
Pneumatic cylinder seals	NBR (FPM for variants with seals in contact with fluid in FPM or PTFE)
Seals in contact with fluid	NBR, FPM, PTFE
Piston rod	Chromed stainelss steel
Bushing, Bushing pad, Nut pad	Brass

Working characteristics

Pneumatic cylinder fluid	Filtered and lubricated air or non
Valve fluid	Fluid compatible with gasket compounds available
Maximum working pressure (bar)	10
Temperature °C, non magnetic piston, NBR seals	-10 / + 70
non magnetic piston, FPM seals	-10 / + 150
non magnetic piston, PTFE seals	-10 / + 150
magnetic piston, NBR, FPM, PTFE seals	-10 / + 70

"T" body version Pad valves

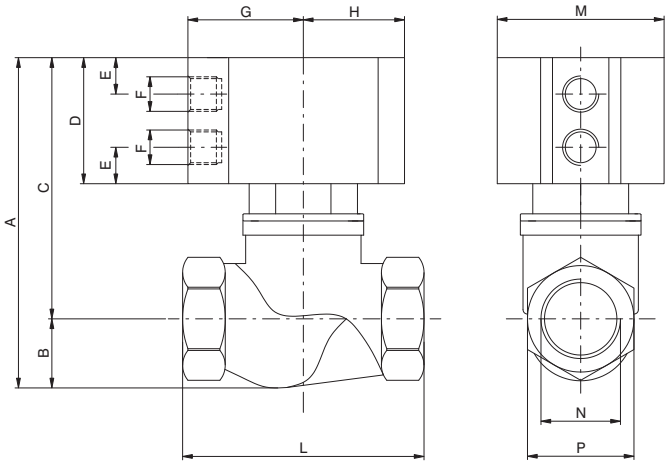

Ordering code

PVA.B.Ⓐ.Ⓟ.T.Ⓒ.Ⓢ

Ⓐ	ACTING
	DE=Double acting
	SC=Normally closed
	SA=Normally open
Ⓟ	PISTON
	N=Non magnetic
	M= Magnetic
Ⓒ	CONNECTIONS
	A=G1/4"
	B=G3/8"
	C=G1/2"
	D=G3/4"
	E=G1"
	F=G1 1/4"
	G=G1 1/2"
	H=G2"
Ⓢ	SEALS
	N=NBR
	V=FPM
	F=PTFE

TABLE OF DIMENSIONS

	Non magnetic version			Magnetic version											TECHNICAL DATA		
Connection (N)	A	C	D	A	C	D	B	E	F	G	H	L	M	P	Actuator (Ø)	Nominal Valve (Ø)	Weight (gr.)
G1/4"	93,5	77,5	41	97,5	81,5	45	16	10,25	G1/8"	32,5	28,5	64	47	25	Ø40	Ø13,5	350
G3/8"	93,5	77,5	41	97,5	81,5	45	16	10,25	G1/8"	32,5	28,5	64	47	25	Ø40	Ø13,5	350
G1/2"	93,5	78	41	99,5	82	45	17,5	10,25	G1/8"	32,5	28,5	68	47	30	Ø40	Ø15	400
G 3/4"	105	83	41	113	90	48	22	11,25	G1/8"	44	40	79	70	36	Ø63	Ø20,5	850
G1"	117	89	41	125	101	53	28	11,25	G1/8"	44	40	94	70	44	Ø63	Ø25	1100
G1 1/4"	131	103	48	136	108	53	28	11,25	G1/8"	44	40	110	70	55	Ø63	Ø30	1400
G1 1/2"	154	118	57	166	130	69	36	13,75	G1/8"	56	49	120	90	60	Ø80	Ø38	2100
G2"	169	124	57	181	136	69	45	13,75	G1/8"	56	49	140	90	73	Ø80	Ø49,5	3000

Pad valves, 2-ways, are a reliable and economic solution to control fluid. Pneumatically actuated by a compact double or single acting cylinder with 360° revolving connections. Standard seals in contact with fluid are made in NBR, FPM or PTFE. The barrel profile allows the use of Pneumax magnetic sensors series 1500 (see the Pneumax Genaral catalogue, chapter 4).

Pressure curves

DOUBLE ACTING CYLINDER

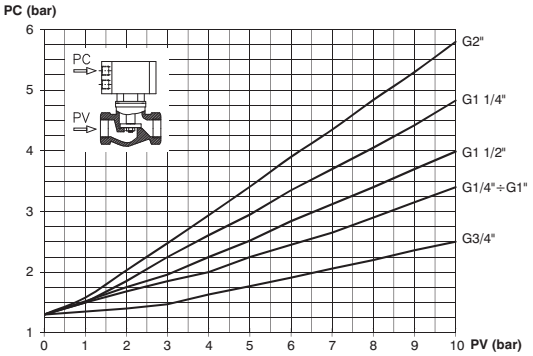

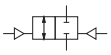

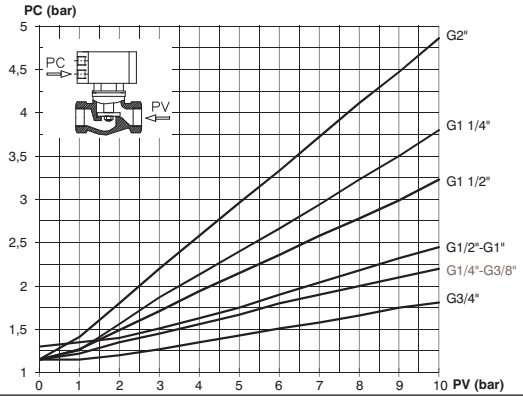

SINGLE ACTING CYLINDER, NORMALLY CLOSED VALVE

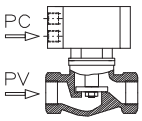

PV max. 2 bar

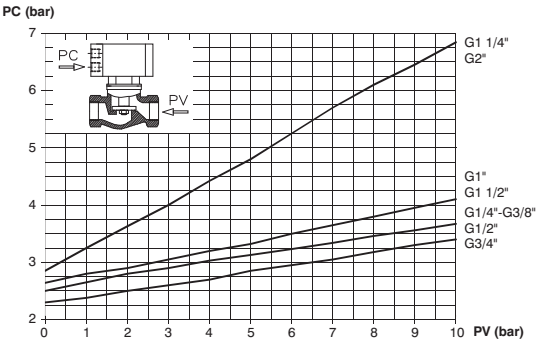

SINGLE ACTING CYLINDER, NORMALLY OPEN VALVE

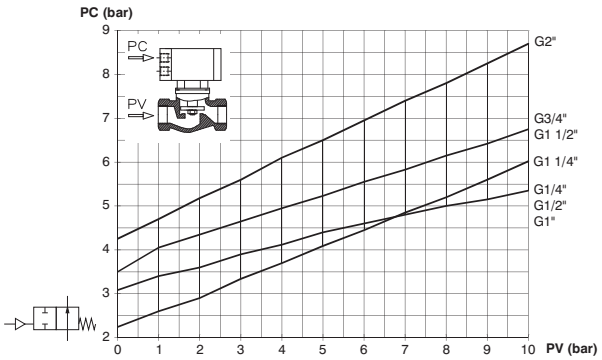

Operational characteristics

- Rear eye, Piston and Rod bushing=Anodized aluminium
- Cylinder=Aluminium alloy Anodized
- Spring=Zinc plated steel
- Seals=NBR, FPM, PTFE
- Piston rod=Chromed stainelss steel
- Bushing, Bushing pad, Nut pad=Brass

Technical characteristics

Fluid	Filtered and lubricated air or non
Maximum working pressure (bar)	10
Temperature °C (non magnetic piston, NBR seals)	-10 / + 70
Temperature °C (non magnetic piston, FPM seals)	-10 / + 150
Temperature °C (non magnetic piston, PTFE seals)	-10 / + 150
Temperature °C (magnetic piston, NBR, FPM, PTFE seals)	-10 / + 70

"Y" body version Pad valves

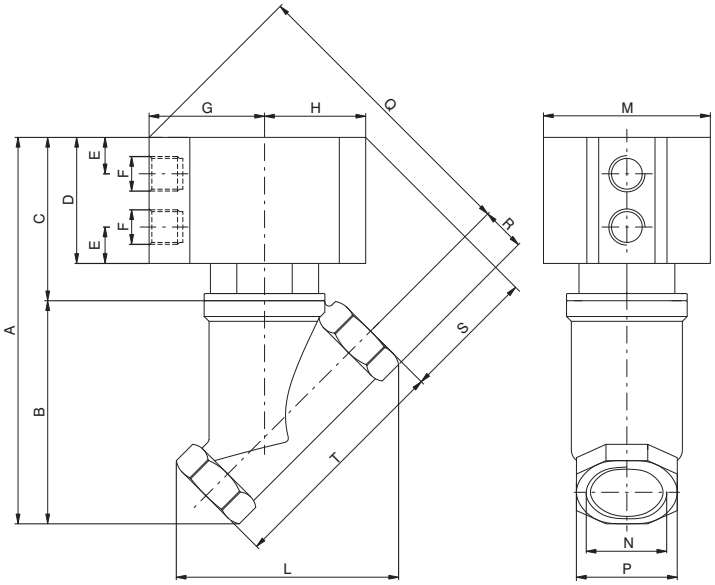

Ordering code

PVA.B.Ⓐ.Ⓟ.Y.Ⓒ.Ⓢ

Ⓐ	ACTING
	DE=Double acting
	SC=Normally closed
	SA=Normally open
Ⓟ	PISTON
	N=Non magnetic
	M= Magnetic
Ⓒ	CONNECTIONS
	A=G1/4"
	B=G3/8"
	C=G1/2"
	D=G3/4"
	E=G1"
	F=G1 1/4"
	G=G1 1/2"
	H=G2"
Ⓢ	SEALS
	N=NBR
	V=FPM
	F=PTFE

TABLE OF DIMENSIONS

	Non magnetic version					Magnetic version															TECHNICAL DATA		
Connection (N)	A	C	D	Q	S	A	C	D	Q	S	B	E	F	G	H	L	M	P	R	T	Actuator (Ø)	Nominal Valve (Ø)	Weight (gr.)
G1/4"	121	71	45	95	51	124	74	48	97	53	50	10,3	G1/8"	32,5	28,5	52	47	21	10,5	50	Ø40	Ø13	350
G3/8"	121	71	45	95	51	124	74	48	97	53	50	10,3	G1/8"	32,5	28,5	52	47	21	10,5	50	Ø40	Ø13	350
G1/2"	127	71	45	97	54	130	74	48	99	56	56	10,3	G1/8"	32,5	28,5	57	47	27	13,5	56	Ø40	Ø13	400
G 3/4"	148	80	48	119	66	201	133	104	175	92	68	11,3	G1/8"	44	40	70	70	32	16	66	Ø63	Ø18	850
G1"	159	75	48	123	75	215	131	104	175	92	84	11,3	G1/8"	44	40	82	70	38	19	78	Ø63	Ø21,5	850
G1 1/4"	184	91	65	140	70	231	138	112	172	96	93	11,3	G1/8"	44	40	105	70	47	23,5	101	Ø63	Ø30	1200
G1 1/2"	180	99	81	173	85	255	129	111	187	107	126	13,8	G1/8"	56	49	125	90	55	27,5	113	Ø80	Ø36	2000
G2"	246	106	88	182	88	269	129	111	203	109	140	13,8	G1/8"	56	49	136	90	68	34	125	Ø80	Ø46	2300

Pad valves, 2-ways, are a reliable and economic solution to control fluid. Pneumatically actuated by a compact double or single acting cylinder with 360° revolving connections. Standard seals in contact with fluid are made in NBR, FPM or PTFE. The barrel profile allows the use of Pneumax magnetic sensors series 1500 (see the Pneumax Genaral catalogue, chapter 4).

Pressure curves

DOUBLE ACTING CYLINDER

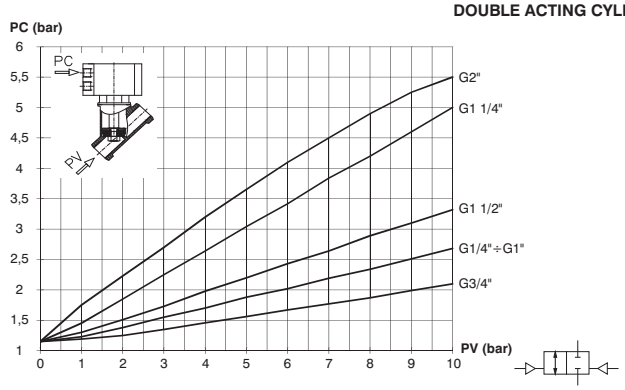

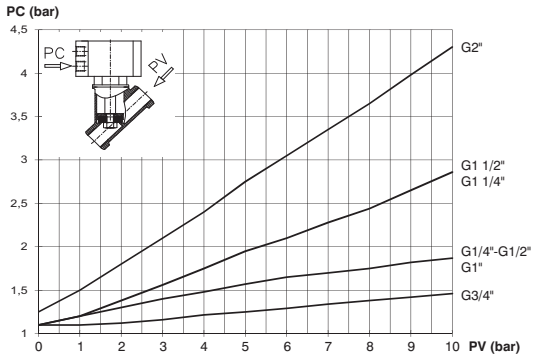

SINGLE ACTING CYLINDER, NORMALLY CLOSED VALVE

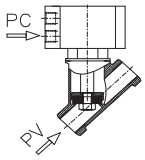

PV max. 2 bar

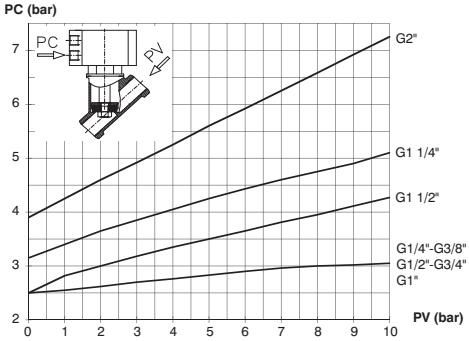

SINGLE ACTING CYLINDER, NORMALLY OPEN VALVE

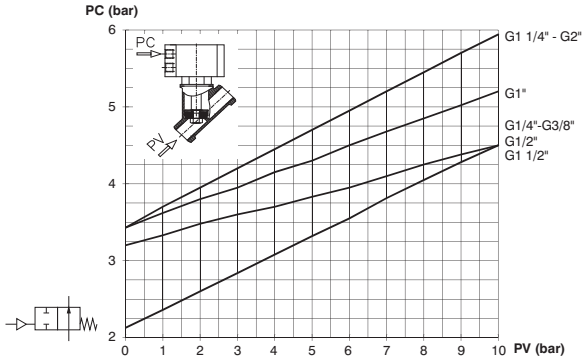

Operational characteristics

- Rear eye, Piston and Rod bushing=Anodized aluminium
- Cylinder=Aluminium alloy Anodized
- Spring=Zinc plated steel
- Seals=NBR, FPM, PTFE
- Piston rod=Chromed stainelss steel
- Bushing, Bushing pad, Nut pad=Brass

Technical characteristics

Fluid	Filtered and lubricated air or non
Maximum working pressure (bar)	10
Temperature °C (non magnetic piston, NBR seals)	-10 / + 70
Temperature °C (non magnetic piston, FPM seals)	-10 / + 150
Temperature °C (non magnetic piston, PTFE seals)	-10 / + 150
Temperature °C (magnetic piston, NBR, FPM, PTFE seals)	-10 / + 70

3/2 Solenoid - Spring

Ordering code

514/N.Ⓣ.0.1.M2

Ⓣ	TYPE
	32=3 ways
	52=5 ways

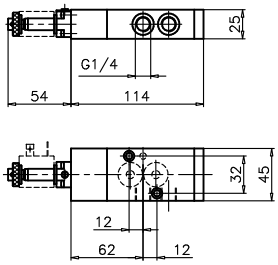

Weight gr. 390
Minimum working pressure 2,5 bar

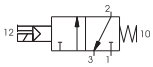

Solenoid - Spring 5/2

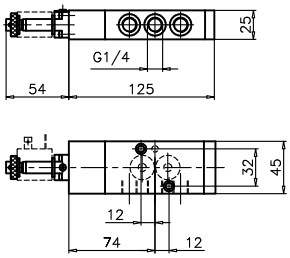

Weight gr. 450
Minimum working pressure 2,5 bar

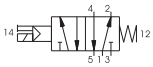

Operational characteristic	Fluid	Max working pressure (bar)	Temperature °C	Flow rate at 6 bar with Δp=1 (Nl/min)	Orifice size (mm)	Working ports size
	Filtered and lubricated air	10 bar	-10 - +50	1030 Nl/min	mm 7	G 1/4"

3/2 Solenoid - Differential

Ordering code

514/N.Ⓣ.0.12.M2

Ⓣ	TYPE
	32=3 ways
	52=5 ways

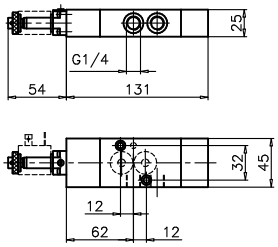

Weight gr. 390
Minimum working pressure 2,5 bar

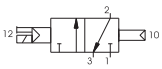

Solenoid - Differential 5/2

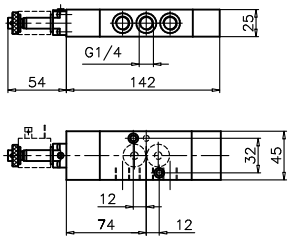

Weight gr. 450
Minimum working pressure 2,5 bar

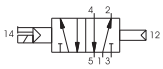

Operational characteristic	Fluid	Max working pressure (bar)	Temperature °C	Flow rate at 6 bar with Δp=1 (Nl/min)	Orifice size (mm)	Working ports size
	Filtered and lubricated air	10 bar	-10 - +50	1030 Nl/min	mm 7	G 1/4"

3/2 Solenoid - Solenoid

Ordering code

514/N.Ⓣ.0.0.M2

Ⓣ	TYPE
	32=3 ways
	52=5 ways

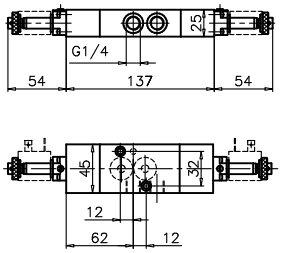

Weight gr. 390
Minimum working pressure 2,5 bar

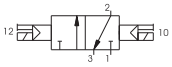

Solenoid - Solenoid 5/2

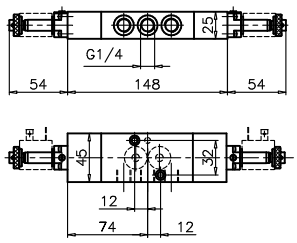

Weight gr. 450
Minimum working pressure 2,5 bar

Operational characteristic	Fluid	Max working pressure (bar)	Temperature °C	Flow rate at 6 bar with Δp=1 (Nl/min)	Orifice size (mm)	Working ports size
	Filtered and lubricated air	10 bar	-10 - +50	1030 Nl/min	mm 7	G 1/4"

Pneumatic - Differential / Pneumatic - Pneumatic / Pneumatic - Spring

4/2
5/2

Ordering code

T514.Ⓣ.00.Ⓕ

Ⓣ	TYPE
	42=4 ways
	52=5 ways
Ⓕ	FUNCTION
	16=Pneumatic - Differential
	18=Pneumatic - Pneumatic
	19=Pneumatic - Spring

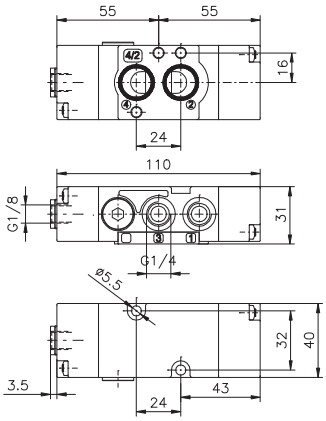

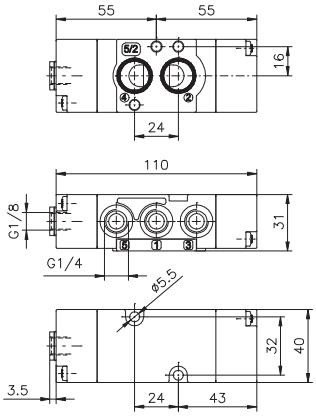

Weight gr. 140
Minimum pilot pressure 2,5 bar

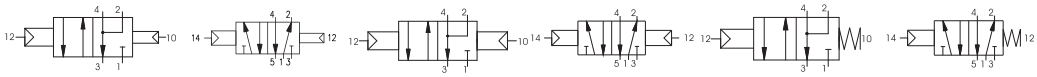

Maximum fixing torque for fittings 9 N/m

Operational characteristic	Fluid	Max working pressure (bar)	Temperature °C	Flow rate at 6 bar with Δp=1 (Nl/min)	Orifice size (mm)	Working ports size
	Filtered and lubricated air	10 bar	-10 - +50	1100 Nl/min	mm 8	G 1/4"

Solenoid - Solenoid

4/2
5/2

Ordering code

T514.Ⓣ.00.35.Ⓥ

Ⓣ	TYPE
	42=4 ways
	52=5 ways
Ⓥ	VOLTAGE
	B04=12 VDC
	B05=24 VDC
	B09=24 VDC (2W)
	B56=24V (50-60 Hz)
	B57=110V (50-60 Hz)
	B58=230V (50-60 Hz)

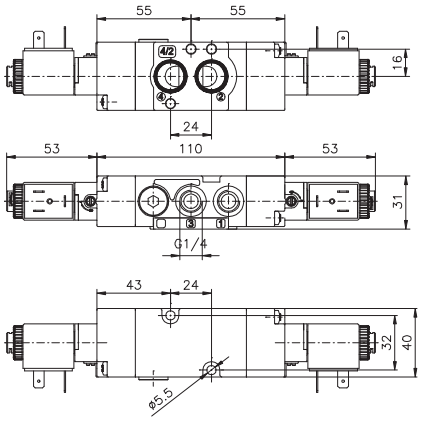

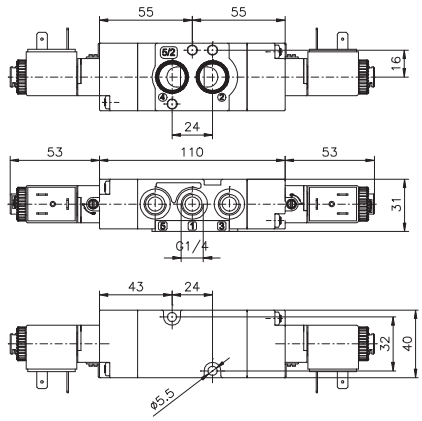

Weight gr. 250
Minimum pilot pressure 2,5 bar
Maximum fixing torque for fittings 9 N/m

Operational characteristic	Fluid	Max working pressure (bar)	Temperature °C	Flow rate at 6 bar with Δp=1 (Nl/min)	Orifice size (mm)	Working ports size
	Filtered and lubricated air	10 bar	-10 - +50	1100 Nl/min	mm 8	G 1/4"

Solenoid - Differential / Solenoid - Spring

4/2
5/2

Ordering code

T514.Ⓣ.00.Ⓕ.Ⓥ

Ⓣ	TYPE
	42=4 ways
	52=5 ways
Ⓕ	FUNCTION
	36=Solenoid - Differential
	39=Solenoid - Spring
Ⓥ	VOLTAGE
	B04=12 VDC
	B05=24 VDC
	B09=24 VDC (2W)
	B56=24V (50-60 Hz)
	B57=110V (50-60 Hz)
	B58=230V (50-60 Hz)

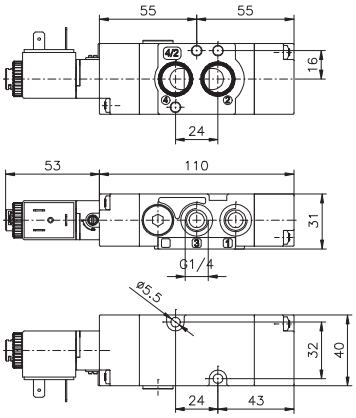

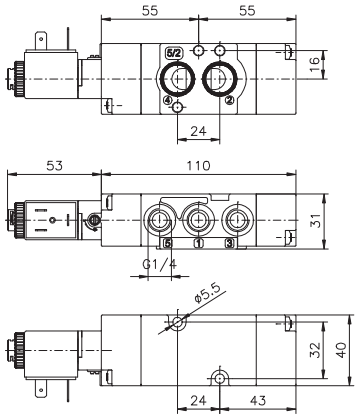

Weight gr. 200
Minimum pilot pressure 2,5 bar
Maximum fixing torque for fittings 9 N/m

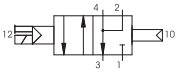

Operational characteristic	Fluid	Max working pressure (bar)	Temperature °C	Flow rate at 6 bar with Δp=1 (Nl/min)	Orifice size (mm)	Working ports size
	Filtered and lubricated air	10 bar	-10 - +50	1100 Nl/min	mm 8	G 1/4"

Universal kit

Ordering code

T514.92.00.Ⓕ.Ⓥ

Ⓕ	FUNCTION
	16=Pneumatic - Differential
	18=Pneumatic - Pneumatic
	19=Pneumatic - Spring
	35=Solenoid - Solenoid
	36=Solenoid - Differential
	39=Solenoid - Spring
Ⓥ	VOLTAGE
	B04=12 VDC
	B05=24 VDC
	B09=24 VDC (2W)
	B56=24V (50-60 Hz)
	B57=110V (50-60 Hz)
	B58=230V (50-60 Hz)

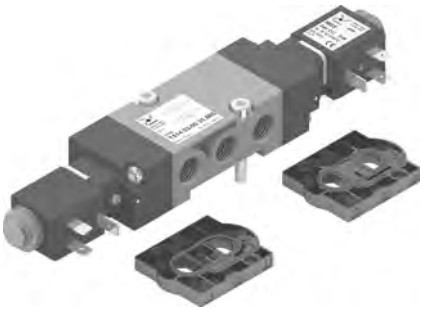

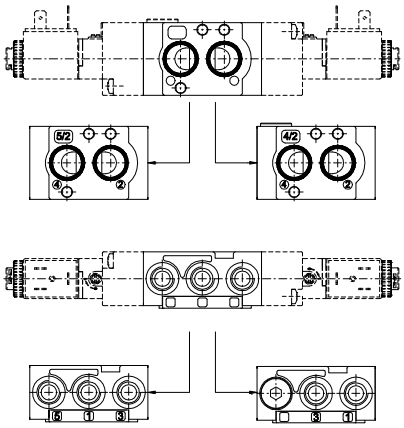

Weight gr. 170
Minimum pilot pressure 2,5 bar
Maximum fixing torque for fittings 9 N/m

To change a 5/2 valve into a 4/2:
Simply replace the bottom plate with the one included in the universal kit (cod. T514.92....) and by plugging port 5

Operational characteristic	Fluid	Max working pressure (bar)	Temperature °C	Flow rate at 6 bar with Δp=1 (Nl/min)	Orifice size (mm)	Working ports size
	Filtered and lubricated air	10 bar	-10 - +50	1100 Nl/min	mm 8	G 1/4"

General

5 ways 2 or 3 positions distributors and electric distributors can be used mounted on individual or ganged bases.
A special feature of these devices is that some of their dimensional and functional characteristics comply with international standars, which require that distributors manufactured by different makers be interchangeable.
These standards are ISO 5599/1, according to which certain dimensions are mandatory, namely, the mounting surface, the pitch of the fastening screws, the characteristic of the electric pilot, the flow rate, the pneumatic connections, and so on.
The design is based on the balanced spool principle with pneumatic or electropneumatic actuators and resetting by mechanically or pneumatically operated spring.
The 3 position closed centres, are obtained by spring operation.
The feed to the actuators on the distributors can be provided either by pressure intake from inlet 1 (autofeed) or through the base from inlets 12 and 14 (external feed); there are two separate types of these distributors: one is the Series 1000 and the other is the Series 1010.
The Serie 1000 includes size 1 and 2 and are built of die-cast aluminium. The selection is made by turning a seal fitted between body and operator by 180°, so to utilize external-feed pilot or with internal feed.
Ordering codes are referring to distributors with "M2" mechanics or solenoid valves "S" mounted (see Series 300). (M2 coil are not included and have to be ordering separately).

Coil for M2 and solenoid "S" C US homologated are available (see Series 300).

The series 1010 includes 3 sizes: 1, 2 and 3. The body and operators of distributor size 1 and 2 are built of acetal resin protected by an anodized aluminium cap, while size 3 is made of die-cast aluminium with protection cap as well. The selection is made as above. For the electro-distributors it is used the electro-pilots CNOMO Series M with possibility to instal the coils ISO 4400 (DIN 43650) or the coil MB 22x22.

Use and maintenance

These distributors have an average life span ranging between 10 and 15 million cycles, depending on operating conditions.
Proper lubrication cuts down the wear of the seals drastically, in the same way as proper filtering prevents the build-up of dirt and consequent malfunctioning of the distributors.
Make sure that the conditions of use comply with the pressure, temperature etc. limits indicated and that the fastening screws are tightened with the following maximum torques on distributors Serie 1010.

Size 1 = 4 Nm **Size 2 = 5 Nm** **Size 3 = 8 Nm**

Assembly kits, including the spool and seals subject to wear, are available for servicing, which can be carried out by anyone provided proper care is taken when reassembling the distributors.

ATTENTION : use only class H Hydraulic oils for lubrication. e.g. MAGNA GC 32 (CASTROL).

Construction characteristics

Series 1000	Size 1	Size 2
Body	Zinc alloy	Aluminium
Operators	Zinc alloy	Aluminium
Spools	Stainless steel	Steel
Seals	NBR	NBR
Spacers	Technopolymer	Aluminium
Springs	Spring steel	Spring steel
Selectors	NBR	NBR

Series 1010	Size 1	Size 2	Size 3
Body	Technopolymer	Technopolymer	Technopolymer
Operators	Technopolymer	Technopolymer	Technopolymer
Spools	Steel	Steel	Steel
Seals	NBR	NBR	NBR
Spacers	Technopolymer	Technopolymer	Technopolymer
Control pistons	Aluminium	Aluminium	Aluminium
Springs	Spring steel	Spring steel	Spring steel

Pneumatic - Spring - 5/2

Ordering code
1001.52.1.9

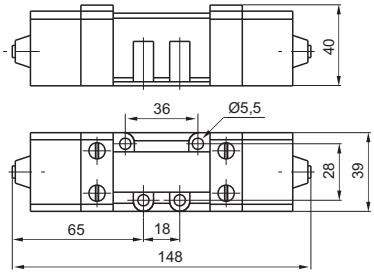

Weight gr. 780
Minimum operating pressure 2,5 bar

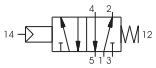

Operational characteristic	Fluid	Max working pressure (bar)	Temperature °C	Flow rate at 6 bar with Δp=1 (Nl/min)
	Filtered and lubricated air	10	-5 - +70	840

Pneumatic - Differential - 5/2

Ordering code
1001.52.1.6

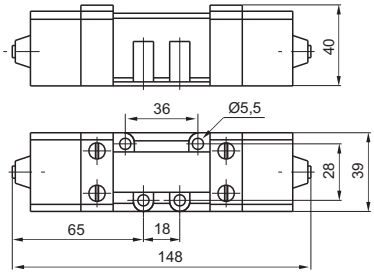

Weight gr. 790
Minimum operating pressure 2 bar

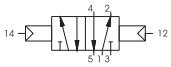

Operational characteristic	Fluid	Max working pressure (bar)	Temperature °C	Flow rate at 6 bar with Δp=1 (Nl/min)
	Filtered and lubricated air	10	-5 - +70	840

Pneumatic - Pneumatic - 5/2

Ordering code
1001.52.1.8

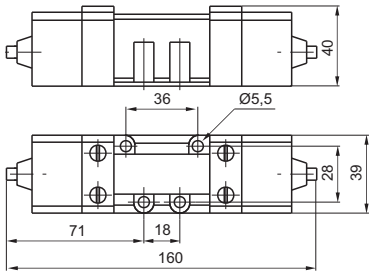

Weight gr. 800
Minimum operating pressure 1,5 bar

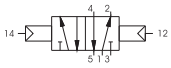

Operational characteristic	Fluid	Max working pressure (bar)	Temperature °C	Flow rate at 6 bar with Δp=1 (Nl/min)
	Filtered and lubricated air	10	-5 - +70	840

Pneumatic - Pneumatic - 5/3

Ordering code
1001.53.Ⓕ.1.8

Ⓕ	FUNCTION
	31=Closed centres
	32=Open centres
	33=Pressured centres

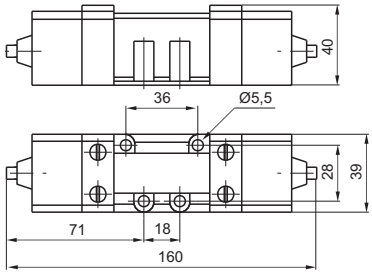

Weight gr. 800
Minimum operating pressure 3 bar

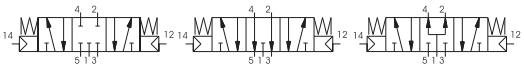

Operational characteristic	Fluid	Max working pressure (bar)	Temperature °C	Flow rate at 6 bar with Δp=1 (Nl/min)
	Filtered and lubricated air	10	-5 - +70	720

2

2

Solenoid - Spring - 5/2

Ordering code

1051.52.3.9.M2

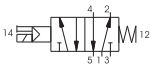

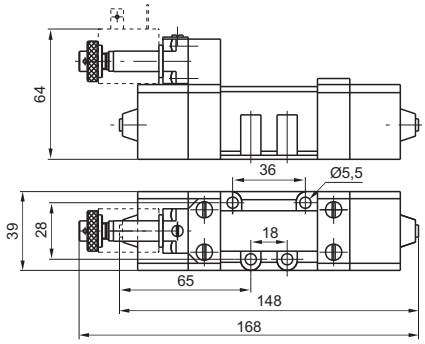

Weight gr. 890
Minimum operating pressure 2,5 bar

Operational characteristic	Fluid	Max working pressure (bar)	Temperature °C	Flow rate at 6 bar with Δp=1 (Nl/min)
	Filtered and lubricated air	10	-5 - +50	840

Solenoid - Differential - 5/2

Ordering code

1051.52.3.6.M2

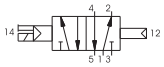

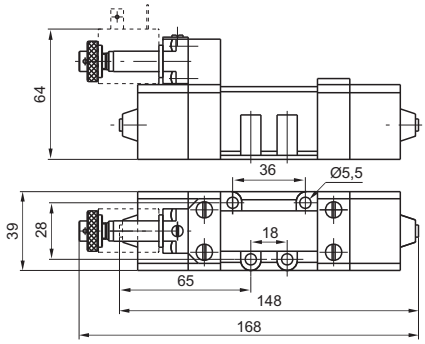

Weight gr. 900
Minimum operating pressure 2 bar

Operational characteristic	Fluid	Max working pressure (bar)	Temperature °C	Flow rate at 6 bar with Δp=1 (Nl/min)
	Filtered and lubricated air	10	-5 - +50	840

Solenoid - Solenoid - 5/2

Ordering code

1051.52.3.5.M2

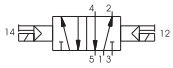

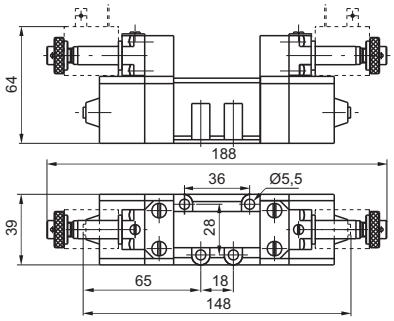

Weight gr. 1040
Minimum operating pressure 1,5 bar

Operational characteristic	Fluid	Max working pressure (bar)	Temperature °C	Flow rate at 6 bar with Δp=1 (Nl/min)
	Filtered and lubricated air	10	-5 - +50	840

Solenoid - Solenoid - 5/3

Ordering code

1051.53.Ⓕ.3.5.M2

	FUNCTION
Ⓕ	31=Closed centres
	32=Open centres
	33=Pressured centres

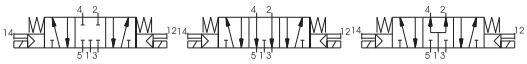

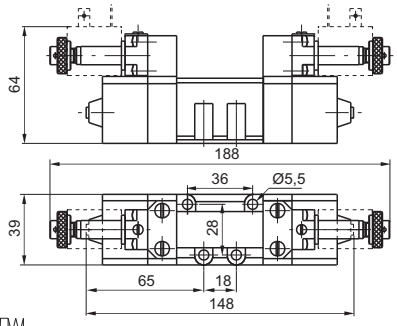

Weight gr. 1040
Minimum operating pressure 3 bar

Operational characteristic	Fluid	Max working pressure (bar)	Temperature °C	Flow rate at 6 bar with Δp=1 (Nl/min)
	Filtered and lubricated air	10	-5 - +50	720

Pneumatic - Differential - 5/2

Ordering code
1002.52.1.6

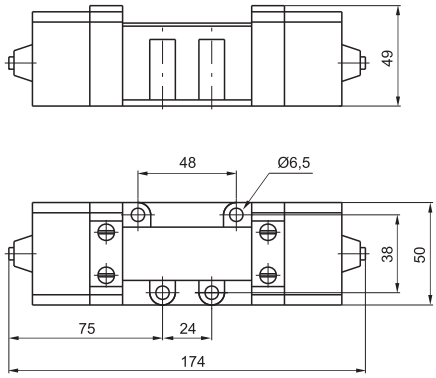

Weight gr. 730
Minimum operating pressure 2 bar

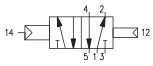

Operational characteristic	Fluid	Max working pressure (bar)	Temperature °C	Flow rate at 6 bar with Δp=1 (Nl/min)
	Filtered and lubricated air	10	-5 - +70	1700

Pneumatic - Pneumatic - 5/2

Ordering code
1002.52.1.8

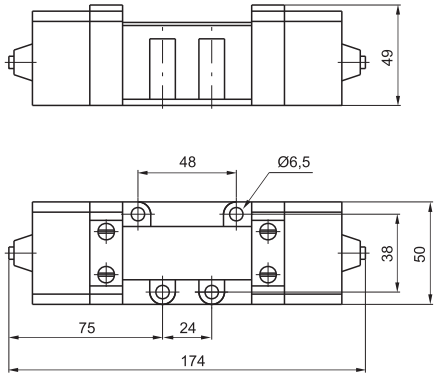

Weight gr. 800
Minimum operating pressure 1,5 bar

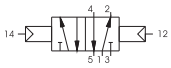

Operational characteristic	Fluid	Max working pressure (bar)	Temperature °C	Flow rate at 6 bar with Δp=1 (Nl/min)
	Filtered and lubricated air	10	-5 - +70	1700

Pneumatic - Pneumatic - 5/3

Ordering code
1002.53.Ⓕ.1.8

Ⓕ	FUNCTION
	31=Closed centres
	32=Open centres
	33=Pressured centres

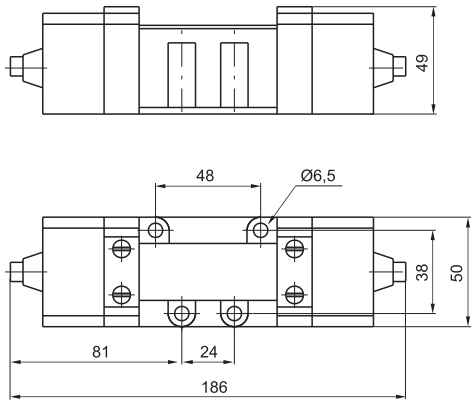

Weight gr. 740
Minimum operating pressure 3 bar

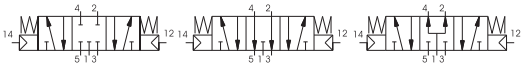

Operational characteristic	Fluid	Max working pressure (bar)	Temperature °C	Flow rate at 6 bar with Δp=1 (Nl/min)
	Filtered and lubricated air	10	-5 - +70	1700

2

Solenoid - Differential - 5/2

Ordering code

1052.52.3.6.M2

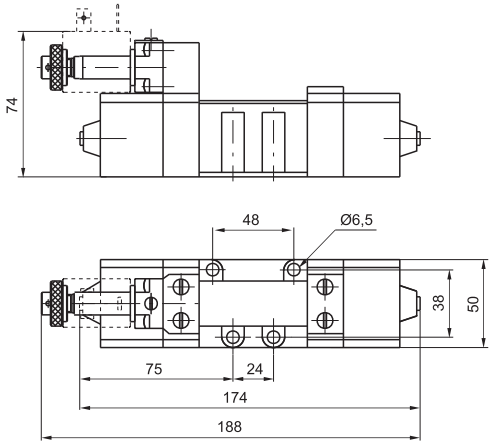

Weight gr. 850
Minimum operating pressure 2 bar

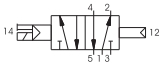

	Fluid	Max working pressure (bar)	Temperature °C	Flow rate at 6 bar with Δp=1 (Nl/min)
Operational characteristic	Filtered and lubricated air	10	-5 - +50	1700

Solenoid - Solenoid - 5/2

Ordering code

1052.52.3.5.M2

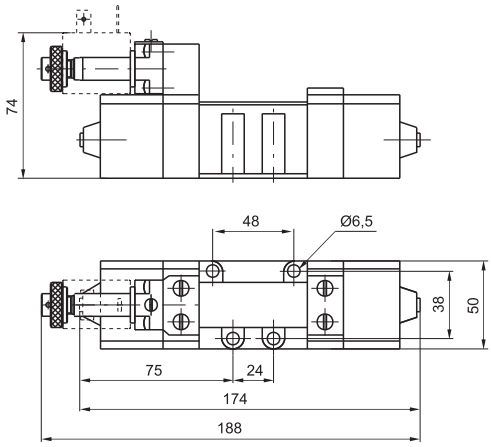

Weight gr. 980
Minimum operating pressure 1,5 bar

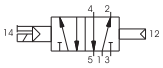

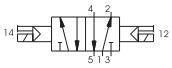

	Fluid	Max working pressure (bar)	Temperature °C	Flow rate at 6 bar with Δp=1 (Nl/min)
Operational characteristic	Filtered and lubricated air	10	-5 - +50	1700

Solenoid - Solenoid - 5/3

Ordering code

1052.53.Ⓕ.3.5.M2

	FUNCTION
Ⓕ	31=Closed centres
	32=Open centres
	33=Pressured centres

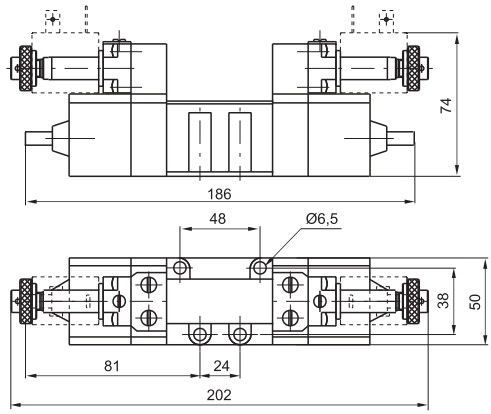

Weight gr. 980
Minimum operating pressure 3 bar

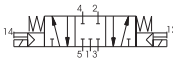

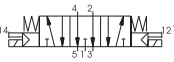

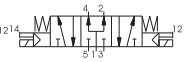

	Fluid	Max working pressure (bar)	Temperature °C	Flow rate at 6 bar with Δp=1 (Nl/min)
Operational characteristic	Filtered and lubricated air	10	-5 - +50	1700

Base CNOMO for 32 mm Solenoid valve

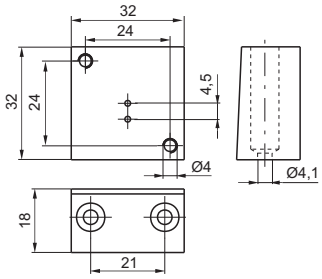

Ordering code

1001.04

Weight gr. 90

Base for 32 mm Solenoid valve

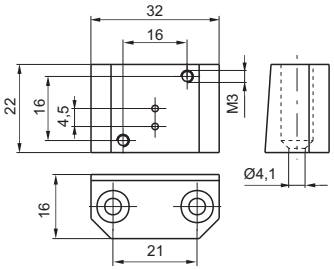

Ordering code

1001.05

Weight gr. 60

Base with bottom connections size 1

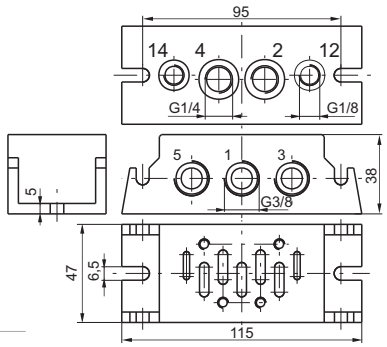

Ordering code

1001.00

Weight gr. 320
1=INLET PORT 2-4=OUTLET PORTS
3-5=EXHAUST PORTS 12-14=PILOT PORTS

Base with side connections size 1

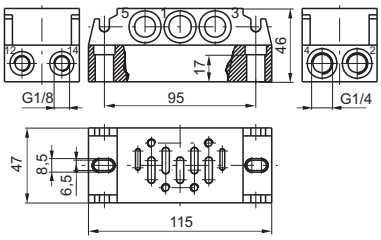

Ordering code

1001.01

Weight gr. 445
1=INLET PORT 2-4=OUTLET PORTS
3-5=EXHAUST PORTS 12-14=PILOT PORTS

Inlet blocks

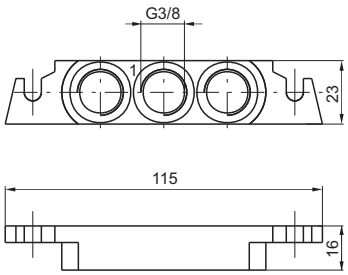

Ordering code

1001.02

Weight gr. 55

Base with bottom connections size 2

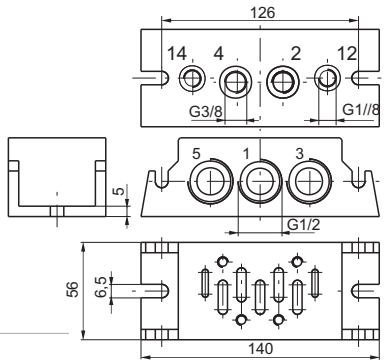

Ordering code

1002.00

Weight gr. 520
1=INLET PORT 2-4=OUTLET PORTS
3-5=EXHAUST PORTS 12-14=PILOT PORTS

2

Pneumatic - Spring - 5/2

Ordering code

1011.52.1.9

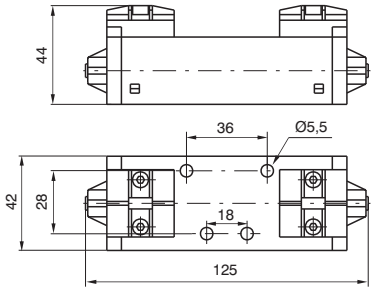

Weight gr. 230
Minimum operating pressure 2,5 bar

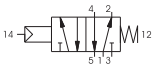

Operational characteristic	Fluid	Max working pressure (bar)	Temperature °C	Flow rate at 6 bar with Δp=1 (Nl/min)
	Filtered and lubricated air	10	-5 - +50	900

Pneumatic - Differential - 5/2

Ordering code

1011.52.1.6

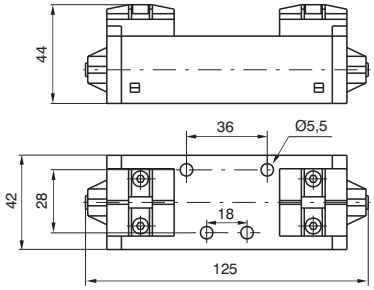

Weight gr. 240
Minimum operating pressure 2 bar

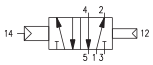

Operational characteristic	Fluid	Max working pressure (bar)	Temperature °C	Flow rate at 6 bar with Δp=1 (Nl/min)
	Filtered and lubricated air	10	-5 - +50	900

Pneumatic - Pneumatic - 5/2

Ordering code

1011.52.1.8

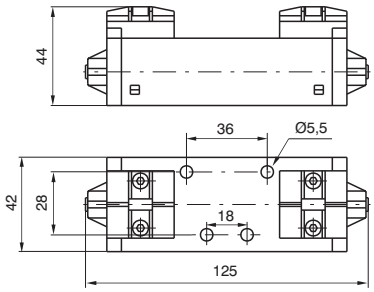

Weight gr. 240
Minimum operating pressure 1,5 bar

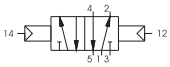

Operational characteristic	Fluid	Max working pressure (bar)	Temperature °C	Flow rate at 6 bar with Δp=1 (Nl/min)
	Filtered and lubricated air	10	-5 - +50	900

Pneumatic - Pneumatic - 5/3

Ordering code

1011.53.Ⓕ.1.8

	FUNCTION
Ⓕ	31=Closed centres
	32=Open centres
	33=Pressured centres

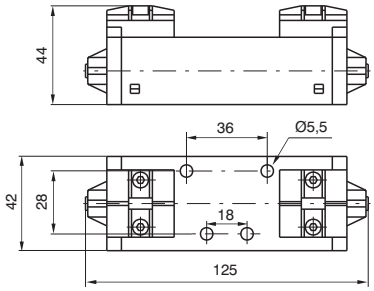

Weight gr. 240
Minimum operating pressure 3 bar

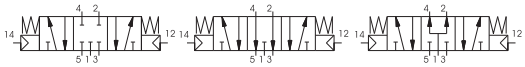

Operational characteristic	Fluid	Max working pressure (bar)	Temperature °C	Flow rate at 6 bar with Δp=1 (Nl/min)
	Filtered and lubricated air	10	-5 - +50	900

Solenoid - Spring - 5/2

Ordering code	
1011.52.3.9.Ⓜ	
Ⓜ	MECHANICAL CODE
	See Valves Series 300 CNOMO

Weight gr. 290
Minimum operating pressure 2,5 bar

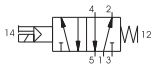

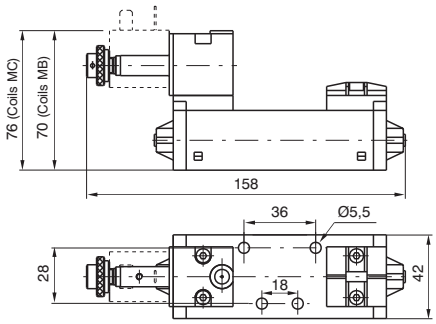

Operational characteristic	Fluid	Max working pressure (bar)	Temperature °C	Flow rate at 6 bar with Δp=1 (Nl/min)
	Filtered and lubricated air	10	-5 - +50	900

Solenoid - Differential - 5/2

Ordering code	
1011.52.3.6.Ⓜ	
Ⓜ	MECHANICAL CODE
	See Valves Series 300 CNOMO

Weight gr. 290
Minimum operating pressure 2 bar

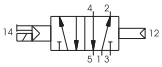

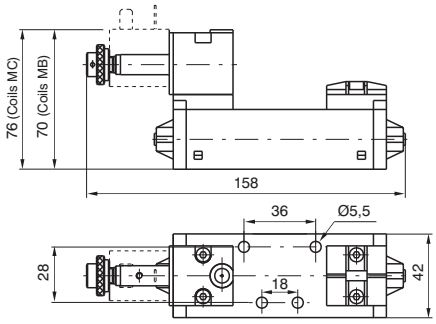

Operational characteristic	Fluid	Max working pressure (bar)	Temperature °C	Flow rate at 6 bar with Δp=1 (Nl/min)
	Filtered and lubricated air	10	-5 - +50	900

Solenoid - Solenoid - 5/2

Ordering code	
1011.52.3.5.Ⓜ	
Ⓜ	MECHANICAL CODE
	See Valves Series 300 CNOMO

Weight gr. 350
Minimum operating pressure 1,5 bar

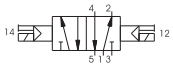

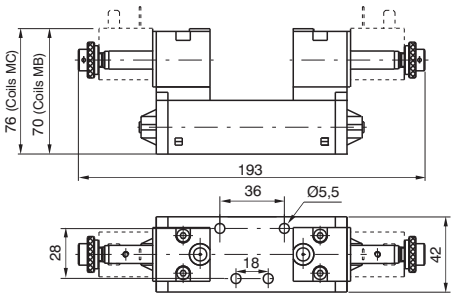

Operational characteristic	Fluid	Max working pressure (bar)	Temperature °C	Flow rate at 6 bar with Δp=1 (Nl/min)
	Filtered and lubricated air	10	-5 - +50	900

Solenoid - Solenoid - 5/3

Ordering code	
1011.53.Ⓕ.3.5.Ⓜ	
Ⓕ	FUNCTION
	31=Closed centres
	32=Open centres
	33=Pressured centres
Ⓜ	MECHANICAL CODE
	See Valves Series 300 CNOMO

Weight gr. 350
Minimum operating pressure 3 bar

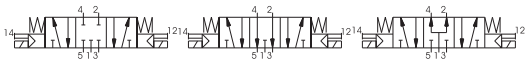

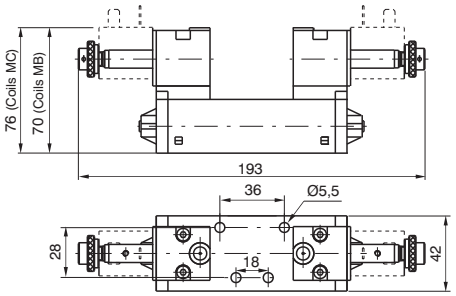

Operational characteristic	Fluid	Max working pressure (bar)	Temperature °C	Flow rate at 6 bar with Δp=1 (Nl/min)
	Filtered and lubricated air	10	-5 - +50	900

2

Pneumatic - Spring - 5/2

Ordering code

1012.52.1.9

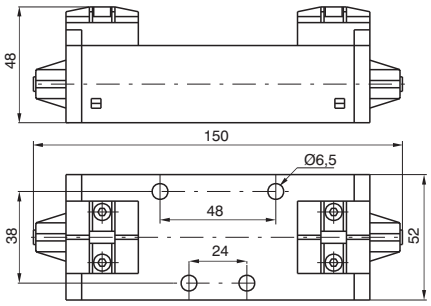

Weight gr. 300
Minimum operating pressure 2,5 bar

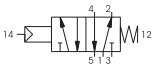

Operational characteristic	Fluid	Max working pressure (bar)	Temperature °C	Flow rate at 6 bar with Δp=1 (Nl/min)
	Filtered and lubricated air	10	-5 - +50	1600

Pneumatic - Differential - 5/2

Ordering code

1012.52.1.6

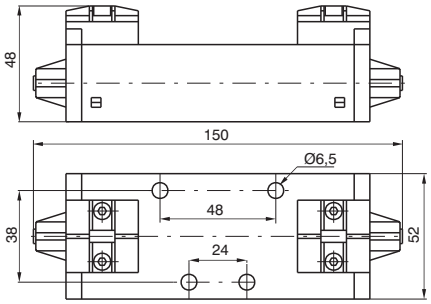

Weight gr. 310
Minimum operating pressure 2 bar

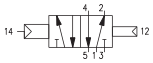

Operational characteristic	Fluid	Max working pressure (bar)	Temperature °C	Flow rate at 6 bar with Δp=1 (Nl/min)
	Filtered and lubricated air	10	-5 - +50	1600

Pneumatic - Pneumatic - 5/2

Ordering code

1012.52.1.8

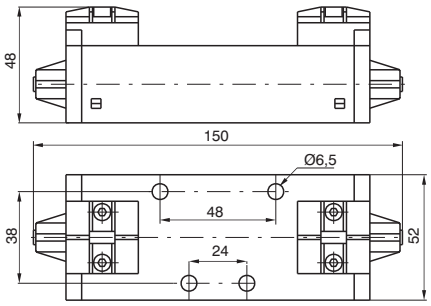

Weight gr. 310
Minimum operating pressure 1,5 bar

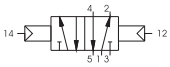

Operational characteristic	Fluid	Max working pressure (bar)	Temperature °C	Flow rate at 6 bar with Δp=1 (Nl/min)
	Filtered and lubricated air	10	-5 - +50	1600

Pneumatic - Pneumatic - 5/3

Ordering code

1012.53.Ⓕ.1.8

	FUNCTION
Ⓕ	31=Closed centres
	32=Open centres
	33=Pressured centres

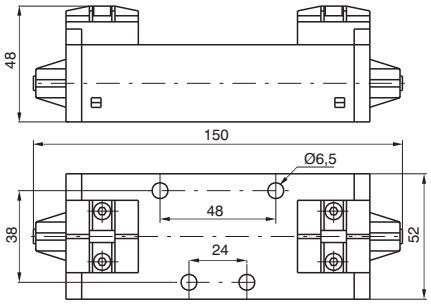

Weight gr. 310
Minimum operating pressure 3 bar

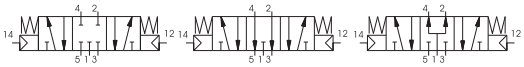

Operational characteristic	Fluid	Max working pressure (bar)	Temperature °C	Flow rate at 6 bar with Δp=1 (Nl/min)
	Filtered and lubricated air	10	-5 - +50	1600

Solenoid - Spring - 5/2

Ordering code	
1012.52.3.9.Ⓜ	
Ⓜ	MECHANICAL CODE
	See Valves Series 300 CNOMO

Weight gr. 360
Minimum operating pressure 2,5 bar

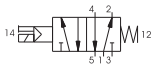

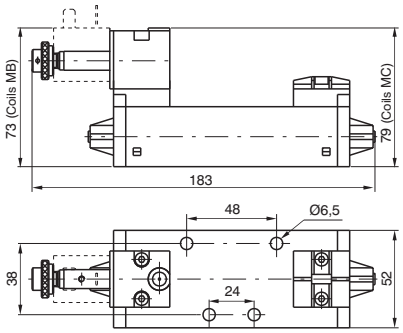

Operational characteristic	Fluid	Max working pressure (bar)	Temperature °C	Flow rate at 6 bar with Δp=1 (Nl/min)
	Filtered and lubricated air	10	-5 - +50	1600

Solenoid - Differential - 5/2

Ordering code	
1012.52.3.6.Ⓜ	
Ⓜ	MECHANICAL CODE
	See Valves Series 300 CNOMO

Weight gr. 360
Minimum operating pressure 2 bar

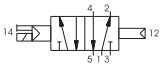

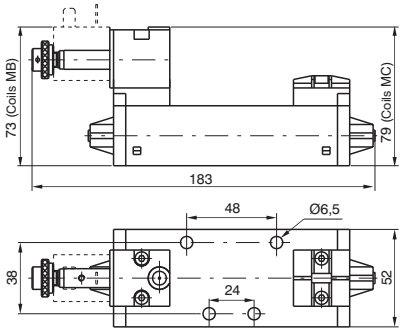

Operational characteristic	Fluid	Max working pressure (bar)	Temperature °C	Flow rate at 6 bar with Δp=1 (Nl/min)
	Filtered and lubricated air	10	-5 - +50	1600

Solenoid - Solenoid - 5/2

Ordering code	
1012.52.3.5.Ⓜ	
Ⓜ	MECHANICAL CODE
	See Valves Series 300 CNOMO

Weight gr. 420
Minimum operating pressure 1,5 bar

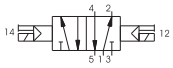

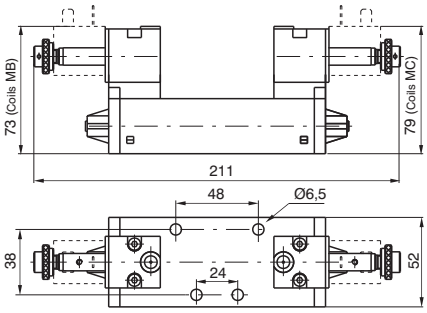

Operational characteristic	Fluid	Max working pressure (bar)	Temperature °C	Flow rate at 6 bar with Δp=1 (Nl/min)
	Filtered and lubricated air	10	-5 - +50	1600

Solenoid - Solenoid - 5/3

Ordering code	
1012.53.Ⓕ.3.5.Ⓜ	
Ⓕ	FUNCTION
	31=Closed centres
	32=Open centres
	33=Pressured centres
Ⓜ	MECHANICAL CODE
	See Valves Series 300 CNOMO

Weight gr. 420
Minimum operating pressure 3 bar

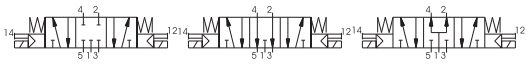

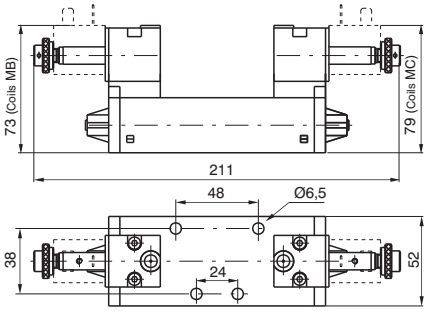

Operational characteristic	Fluid	Max working pressure (bar)	Temperature °C	Flow rate at 6 bar with Δp=1 (Nl/min)
	Filtered and lubricated air	10	-5 - +50	1600

2

Pneumatic - Spring - 5/2

Ordering code

1013.52.1.9

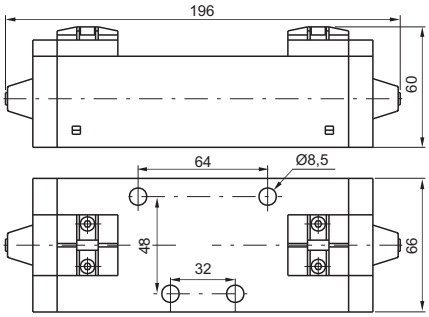

Weight gr. 1000
Minimum operating pressure 2,5 bar

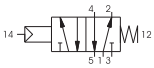

Operational characteristic	Fluid	Max working pressure (bar)	Temperature °C	Flow rate at 6 bar with Δp=1 (Nl/min)
	Filtered and lubricated air	10	-5 - +50	3600

Pneumatic - Differential - 5/2

Ordering code

1013.52.1.6

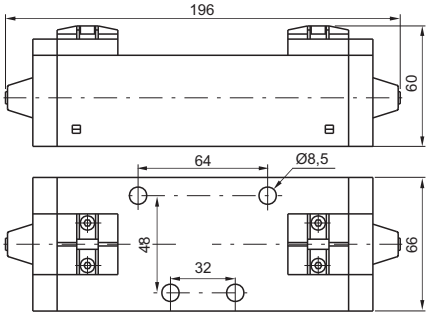

Weight gr. 1020
Minimum operating pressure 2 bar

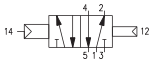

Operational characteristic	Fluid	Max working pressure (bar)	Temperature °C	Flow rate at 6 bar with Δp=1 (Nl/min)
	Filtered and lubricated air	10	-5 - +50	3600

Pneumatic - Pneumatic - 5/2

Ordering code

1013.52.1.8

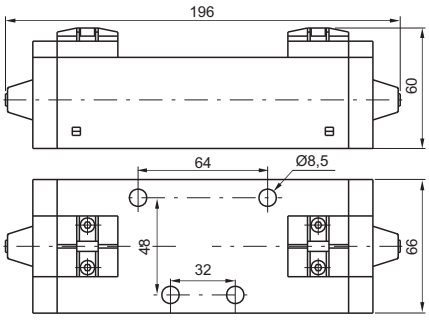

Weight gr. 1050
Minimum operating pressure 1,5 bar

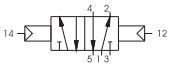

Operational characteristic	Fluid	Max working pressure (bar)	Temperature °C	Flow rate at 6 bar with Δp=1 (Nl/min)
	Filtered and lubricated air	10	-5 - +50	3600

Pneumatic - Pneumatic - 5/3

Ordering code

1013.53.F.1.8

	FUNCTION
F	31=Closed centres
	32=Open centres
	33=Pressured centres

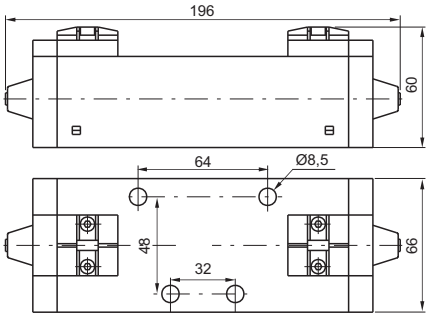

Weight gr. 1050
Minimum operating pressure 3 bar

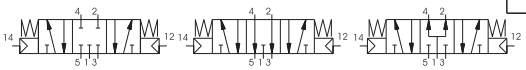

Operational characteristic	Fluid	Max working pressure (bar)	Temperature °C	Flow rate at 6 bar with Δp=1 (Nl/min)
	Filtered and lubricated air	10	-5 - +50	3000

Solenoid - Spring - 5/2

Ordering code	
1013.52.3.9.Ⓜ	
Ⓜ	MECHANICAL CODE
	See Valves Series 300 CNOMO

Weight gr. 1060
Minimum operating pressure 2,5 bar

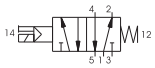

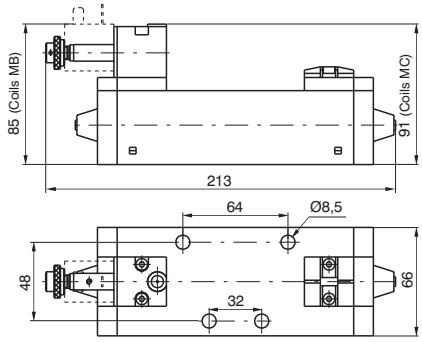

Operational characteristic	Fluid	Max working pressure (bar)	Temperature °C	Flow rate at 6 bar with Δp=1 (Nl/min)
	Filtered and lubricated air	10	-5 - +50	3600

Solenoid - Differential - 5/2

Ordering code	
1013.52.3.6.Ⓜ	
Ⓜ	MECHANICAL CODE
	See Valves Series 300 CNOMO

Weight gr. 1080
Minimum operating pressure 2 bar

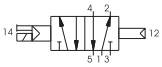

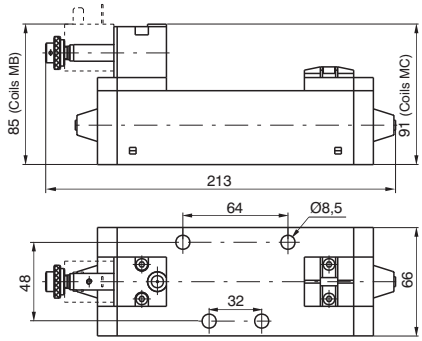

Operational characteristic	Fluid	Max working pressure (bar)	Temperature °C	Flow rate at 6 bar with Δp=1 (Nl/min)
	Filtered and lubricated air	10	-5 - +50	3600

Solenoid - Solenoid - 5/2

Ordering code	
1013.52.3.5.Ⓜ	
Ⓜ	MECHANICAL CODE
	See Valves Series 300 CNOMO

Weight gr. 1170
Minimum operating pressure 1,5 bar

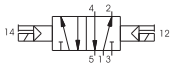

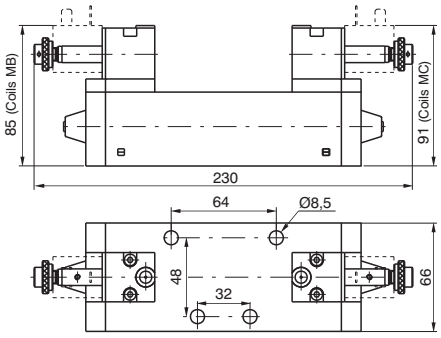

Operational characteristic	Fluid	Max working pressure (bar)	Temperature °C	Flow rate at 6 bar with Δp=1 (Nl/min)
	Filtered and lubricated air	10	-5 - +50	3600

Solenoid - Solenoid - 5/3

Ordering code	
1013.53.Ⓕ.3.5.Ⓜ	
Ⓕ	FUNCTION
	31=Closed centres
	32=Open centres
	33=Pressured centres
Ⓜ	MECHANICAL CODE
	See Valves Series 300 CNOMO

Weight gr. 1170
Minimum operating pressure 3 bar

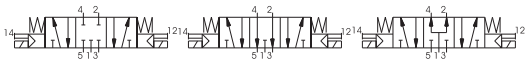

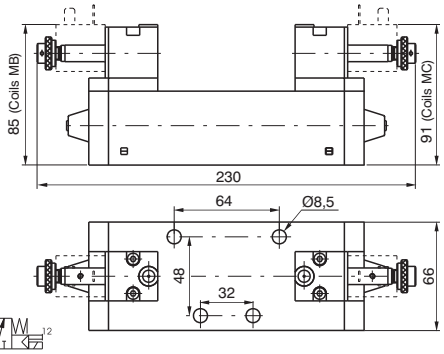

Operational characteristic	Fluid	Max working pressure (bar)	Temperature °C	Flow rate at 6 bar with Δp=1 (Nl/min)
	Filtered and lubricated air	10	-5 - +50	3000

These bases are manufactured with the outlet and pilot ports on both the sides and the bottom faces giving the option for use with any application. Unused ports must be blanked off using threaded plugs which are not included in the part number or price. To isolate bases from each other for use with different supply pressures ports 1, 3 & 5 should be plugged underneath the seal.
The codes are:

1101.17 (size 1) - **1102.17** (size 2) - **1103.17** (size 3)

Size 1

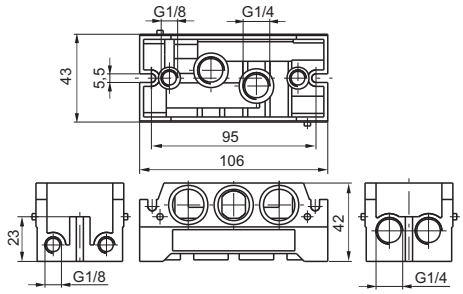

Ordering code
1101.00

Weight gr. 240

Size 2

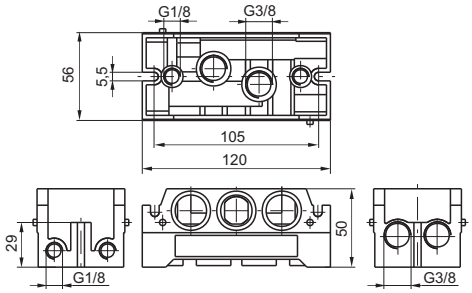

Ordering code
1102.00

Weight gr. 340

Size 3

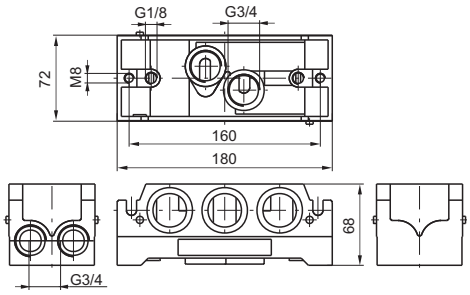

Ordering code
1103.00

Weight gr. 950

2

Size 1

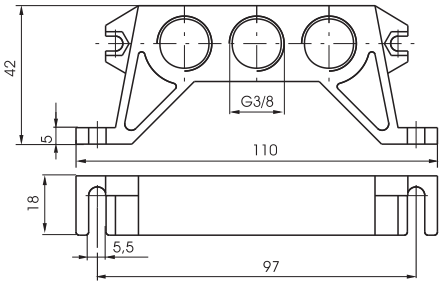

Ordering code
1101.09

Weight gr. 100

Size 1

Ordering code
1101.Ⓒ

	CONNECTIONS
Ⓒ	10=Universal
	11=Aligned connections
	12=Top connections
	13=Bottom connections

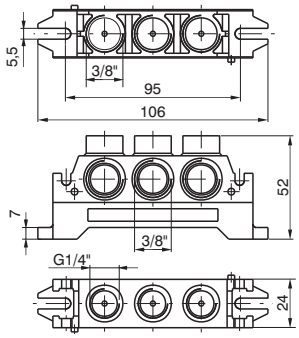

Weight gr. 160

Size 2

Ordering code
1102.Ⓒ

	CONNECTIONS
Ⓒ	10=Universal
	11=Aligned connections
	12=Top connections
	13=Bottom connections

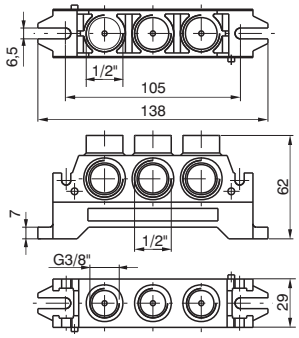

Weight gr. 230

Size 3

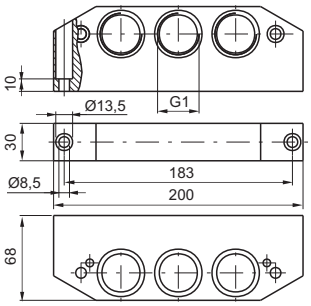

Ordering code
1103.11

Weight gr. 840

Size 1 - shape "A"

Ordering code

1101.14

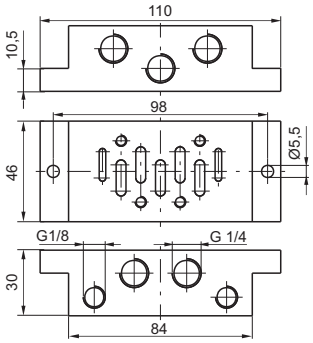

Weight gr. 160

Size 1 - shape "B"

Ordering code

1101.15

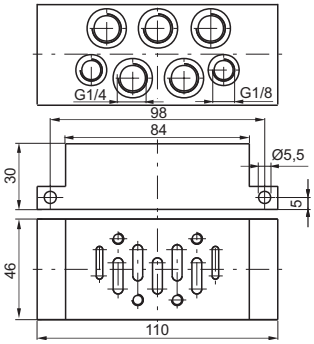

Weight gr. 190

Size 1 - closing plate

Ordering code

1101.16

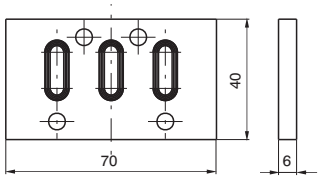

Size 2 - shape "A"

Ordering code

1102.14

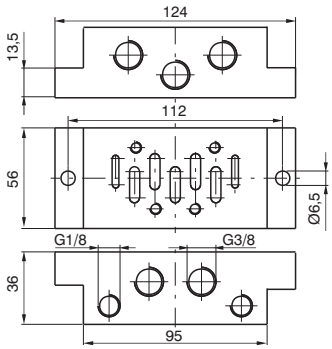

Weight gr. 190

Size 2 - shape "B"

Ordering code

1102.15

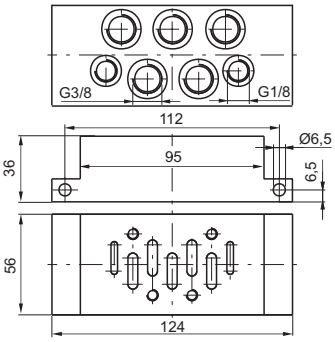

Weight gr. 220

Size 2- closing plate

Ordering code

1102.16

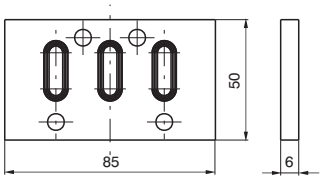

Size 3 - shape "A"

Ordering code

1103.14

Weight gr. 600

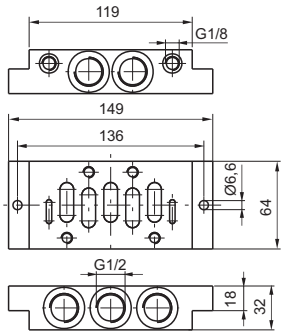

Size 3- closing plate

Ordering code

1103.16

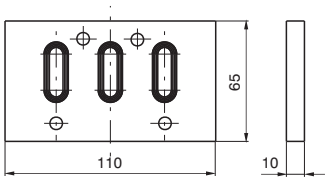

Base adaptor Size 2-1

Ordering code

1100.2-1

Weight gr. 110

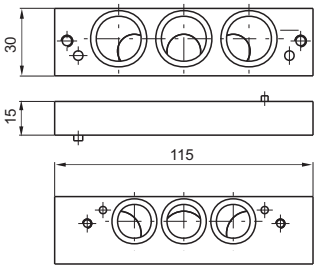

Base adaptor Size 3-2

Ordering code

1100.3-2

Weight gr. 590

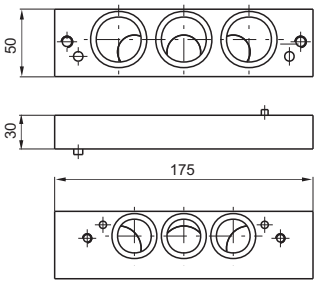

General

To Increase the range of ISO 5599/1 Solenoid valves, we have added the new ISO-M12 series.
These are available in three sizes, size 1, size 2 and size 3 with flow rates from 900 Nl/min for size 1 up to the 3600 Nl/min for size 3.
The standard features of the ISO valves are still included, however, they are now combined with a M12 electrical connector located in the middle of the valve to manage the electrical signals.
Versions are available to suit valves with both single and double 24VDC solenoids complete with IP65 protection, in addition all version are supplied with LED indicators

"***Shifting time of pneumatic directional control valves or moving parts, logic devices were measured in accordance to ISO 12238:2001, Pneumatic fluid power - Directional control valves - Measurement of shifting time***"

Electrical characteristics

Electrical connector M12x1
Protection degree IP65
Input voltage 24VDC
Nominal power 2,3W
LED indentification

Monostable version

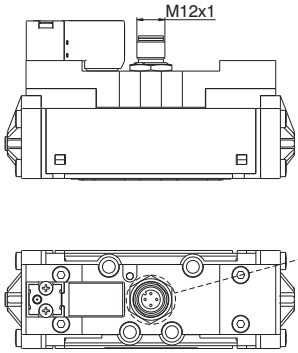

Electrical diagram

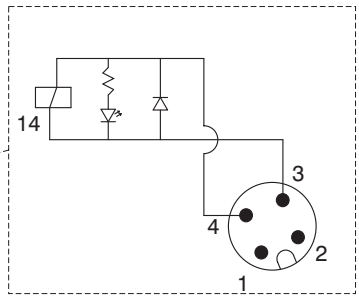

Bistable version

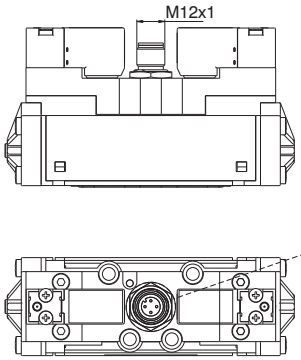

Electrical diagram

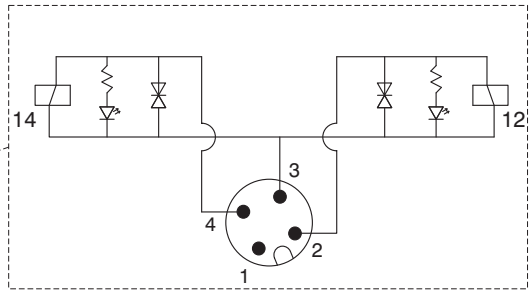

2

Solenoid - Spring-5/2

Ordering code

1111.52.3.9.Ⓣ

Ⓣ	COIL VOLTAGE
	12P=24VDC

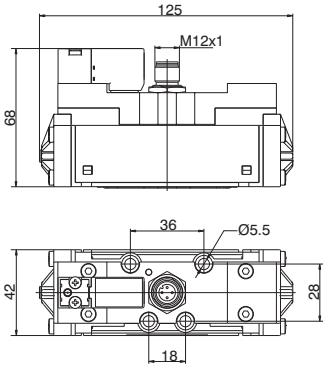

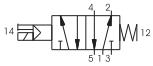

Shifting time of pneumatic directional control valves or moving parts, logic devices were measured in accordance to ISO 12238:2001, Pneumatic fluid power - Directional control valves - Measurement of shifting time.

Operational characteristic

Fluid	Flow rate at 6 bar with Δp=1 (Nl/min)	Responce time according to ISO 12238, activation time (ms)	Responce time according to ISO 12238, deactivation time (ms)	Max working pressure (bar)	Minimum piloting pressure (bar)	Weight (gr.)	Temperature °C
Filtered and lubricated air	900	16	122	10	2,5	350	-5 ÷ +50

Solenoid - Differential-5/2

Ordering code

1111.52.3.6.Ⓣ

Ⓣ	COIL VOLTAGE
	12P=24VDC

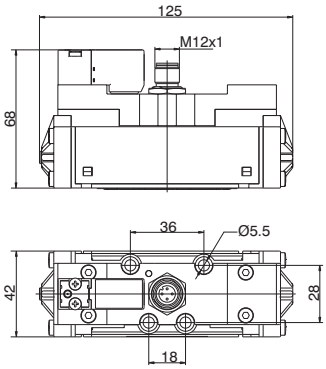

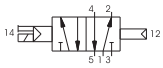

Shifting time of pneumatic directional control valves or moving parts, logic devices were measured in accordance to ISO 12238:2001, Pneumatic fluid power - Directional control valves - Measurement of shifting time.

Operational characteristic

Fluid	Flow rate at 6 bar with Δp=1 (Nl/min)	Responce time according to ISO 12238, activation time (ms)	Responce time according to ISO 12238, deactivation time (ms)	Max working pressure (bar)	Minimum piloting pressure (bar)	Weight (gr.)	Temperature °C
Filtered and lubricated air	900	32	51	10	2	356	-5 ÷ +50

Solenoid-Solenoid-5/2

Ordering code

1111.52.3.5.Ⓣ

Ⓣ	COIL VOLTAGE
	12P=24VDC

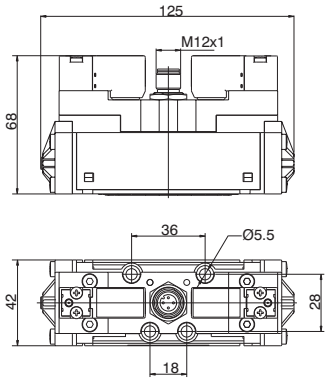

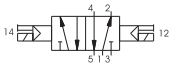

Shifting time of pneumatic directional control valves or moving parts, logic devices were measured in accordance to ISO 12238:2001, Pneumatic fluid power - Directional control valves - Measurement of shifting time.

Operational characteristic

Fluid	Flow rate at 6 bar with Δp=1 (Nl/min)	Responce time according to ISO 12238, activation time (ms)	Responce time according to ISO 12238, deactivation time (ms)	Max working pressure (bar)	Minimum piloting pressure (bar)	Weight (gr.)	Temperature °C
Filtered and lubricated air	900	13	14	10	1,5	390	-5 ÷ +50

Solenoid-Solenoid-5/3 (Closed centres)

Ordering code

1111.53.31.3.5.Ⓣ

Ⓣ	COIL VOLTAGE
	12P=24VDC

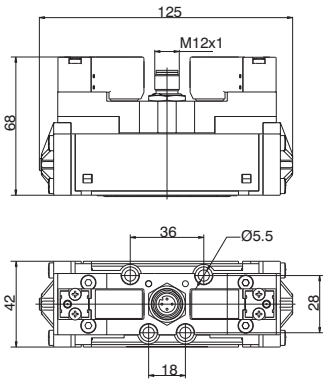

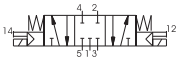

Shifting time of pneumatic directional control valves or moving parts, logic devices were measured in accordance to ISO 12238:2001, Pneumatic fluid power - Directional control valves - Measurement of shifting time.

Operational characteristic

Fluid	Flow rate at 6 bar with Δp=1 (Nl/min)	Responce time according to ISO 12238, activation time (ms)	Responce time according to ISO 12238, deactivation time (ms)	Max working pressure (bar)	Minimum piloting pressure (bar)	Weight (gr.)	Temperature °C
Filtered and lubricated air	900	18	19	10	3	392	-5 ÷ +50

Solenoid-Solenoid-5/3 (Open centres)

Ordering code

1111.53.32.3.5.Ⓣ

Ⓣ	COIL VOLTAGE
	12P=24VDC

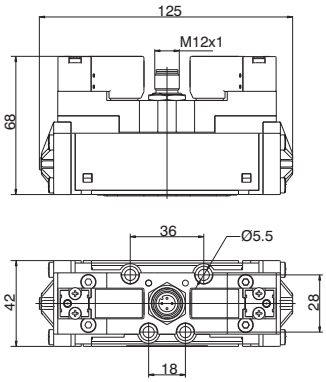

Shifting time of pneumatic directional control valves or moving parts, logic devices were measured in accordance to ISO 12238:2001, Pneumatic fluid power - Directional control valves - Measurement of shifting time.

Operational characteristic

Fluid	Flow rate at 6 bar with Δp=1 (Nl/min)	Responce time according to ISO 12238, activation time (ms)	Responce time according to ISO 12238, deactivation time (ms)	Max working pressure (bar)	Minimum piloting pressure (bar)	Weight (gr.)	Temperature °C
Filtered and lubricated air	900	18	20	10	3	392	-5 ÷ +50

Solenoid-Solenoid-5/3 (Pressured centres)

Ordering code

1111.53.33.3.5.Ⓣ

Ⓣ	COIL VOLTAGE
	12P=24VDC

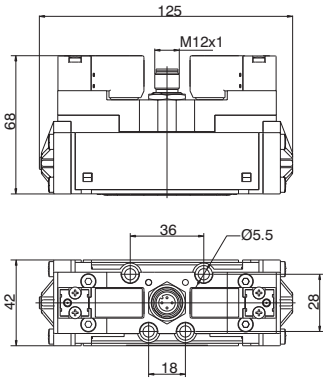

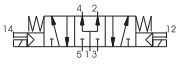

Shifting time of pneumatic directional control valves or moving parts, logic devices were measured in accordance to ISO 12238:2001, Pneumatic fluid power - Directional control valves - Measurement of shifting time.

Operational characteristic

Fluid	Flow rate at 6 bar with Δp=1 (Nl/min)	Responce time according to ISO 12238, activation time (ms)	Responce time according to ISO 12238, deactivation time (ms)	Max working pressure (bar)	Minimum piloting pressure (bar)	Weight (gr.)	Temperature °C
Filtered and lubricated air	900	19	18	10	3	392	-5 ÷ +50

2

Solenoid - Spring-5/2

Ordering code

1112.52.3.9.Ⓣ

Ⓣ	COIL VOLTAGE
	12P=24VDC

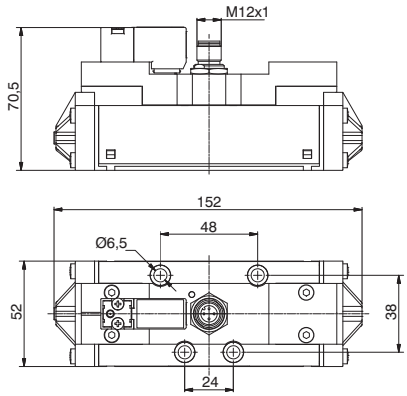

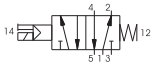

Shifting time of pneumatic directional control valves or moving parts, logic devices were measured in accordance to ISO 12238:2001, Pneumatic fluid power - Directional control valves - Measurement of shifting time.

Operational characteristic

Fluid	Flow rate at 6 bar with Δp=1 (Nl/min)	Responce time according to ISO 12238, activation time (ms)	Responce time according to ISO 12238, deactivation time (ms)	Max working pressure (bar)	Minimum piloting pressure (bar)	Weight (gr.)	Temperature °C
Filtered and lubricated air	1600	24	124	10	2,5	510	-5 ÷ +50

Solenoid - Differential-5/2

Ordering code

1112.52.3.6.Ⓣ

Ⓣ	COIL VOLTAGE
	12P=24VDC

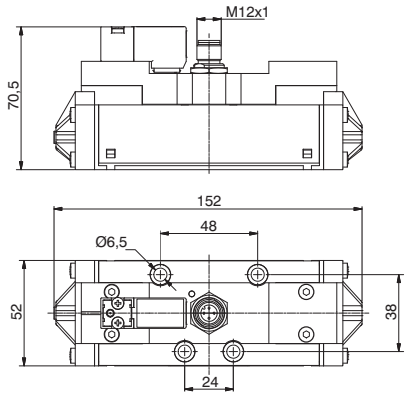

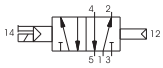

Shifting time of pneumatic directional control valves or moving parts, logic devices were measured in accordance to ISO 12238:2001, Pneumatic fluid power - Directional control valves - Measurement of shifting time.

Operational characteristic

Fluid	Flow rate at 6 bar with Δp=1 (Nl/min)	Responce time according to ISO 12238, activation time (ms)	Responce time according to ISO 12238, deactivation time (ms)	Max working pressure (bar)	Minimum piloting pressure (bar)	Weight (gr.)	Temperature °C
Filtered and lubricated air	1600	37	90	10	2	515	-5 ÷ +50

Solenoid-Solenoid-5/2

Ordering code

1112.52.3.5.Ⓣ

Ⓣ	COIL VOLTAGE
	12P=24VDC

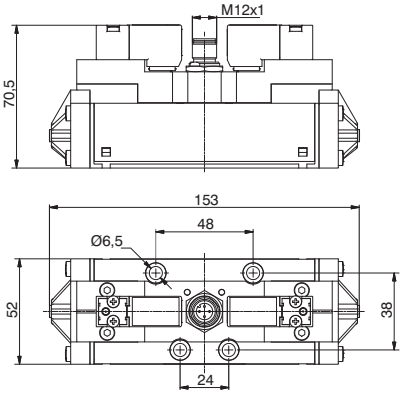

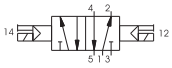

Shifting time of pneumatic directional control valves or moving parts, logic devices were measured in accordance to ISO 12238:2001, Pneumatic fluid power - Directional control valves - Measurement of shifting time.

Operational characteristic

Fluid	Flow rate at 6 bar with Δp=1 (Nl/min)	Responce time according to ISO 12238, activation time (ms)	Responce time according to ISO 12238, deactivation time (ms)	Max working pressure (bar)	Minimum piloting pressure (bar)	Weight (gr.)	Temperature °C
Filtered and lubricated air	1600	17	20	10	1,5	550	-5 ÷ +50

Solenoid-Solenoid-5/3 (Closed centres)

Ordering code

1112.53.31.3.5.T

T	COIL VOLTAGE
	12P=24VDC

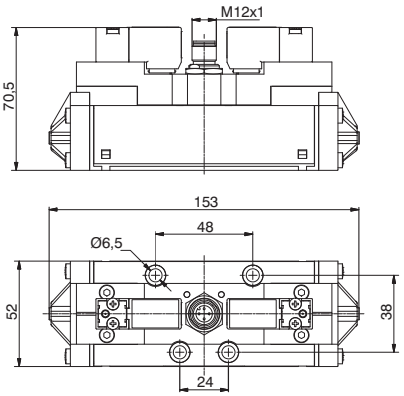

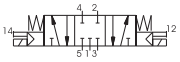

Shifting time of pneumatic directional control valves or moving parts, logic devices were measured in accordance to ISO 12238:2001, Pneumatic fluid power - Directional control valves - Measurement of shifting time.

Operational characteristic

Fluid	Flow rate at 6 bar with Δp=1 (Nl/min)	Responce time according to ISO 12238, activation time (ms)	Responce time according to ISO 12238, deactivation time (ms)	Max working pressure (bar)	Minimum piloting pressure (bar)	Weight (gr.)	Temperature °C
Filtered and lubricated air	1600	18	112	10	3	560	-5 ÷ +50

Solenoid-Solenoid-5/3 (Open centres)

Ordering code

1112.53.32.3.5.T

T	COIL VOLTAGE
	12P=24VDC

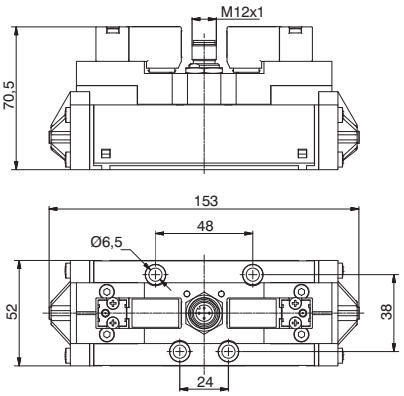

Shifting time of pneumatic directional control valves or moving parts, logic devices were measured in accordance to ISO 12238:2001, Pneumatic fluid power - Directional control valves - Measurement of shifting time.

Operational characteristic

Fluid	Flow rate at 6 bar with Δp=1 (Nl/min)	Responce time according to ISO 12238, activation time (ms)	Responce time according to ISO 12238, deactivation time (ms)	Max working pressure (bar)	Minimum piloting pressure (bar)	Weight (gr.)	Temperature °C
Filtered and lubricated air	1600	18	106	10	3	560	-5 ÷ +50

Solenoid-Solenoid-5/3 (Pressured centres)

Ordering code

1112.53.33.3.5.T

T	COIL VOLTAGE
	12P=24VDC

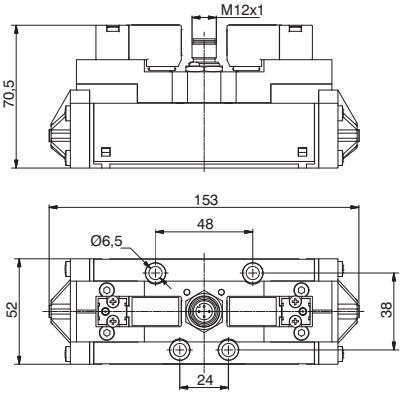

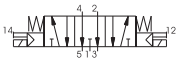

Shifting time of pneumatic directional control valves or moving parts, logic devices were measured in accordance to ISO 12238:2001, Pneumatic fluid power - Directional control valves - Measurement of shifting time.

Operational characteristic

Fluid	Flow rate at 6 bar with Δp=1 (Nl/min)	Responce time according to ISO 12238, activation time (ms)	Responce time according to ISO 12238, deactivation time (ms)	Max working pressure (bar)	Minimum piloting pressure (bar)	Weight (gr.)	Temperature °C
Filtered and lubricated air	1600	20	118	10	3	560	-5 ÷ +50

2

Solenoid - Spring-5/2

Ordering code

1113.52.3.9.Ⓣ

Ⓣ	COIL VOLTAGE
	12P=24VDC

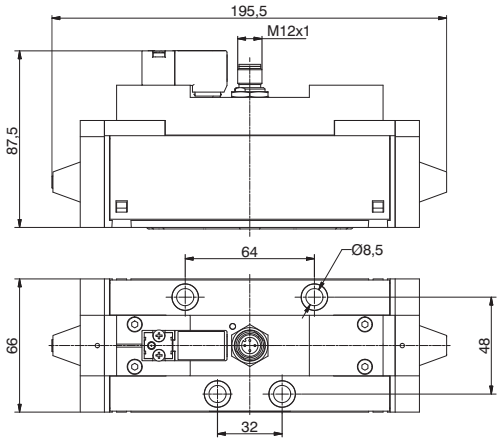

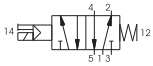

Shifting time of pneumatic directional control valves or moving parts, logic devices were measured in accordance to ISO 12238:2001, Pneumatic fluid power - Directional control valves - Measurement of shifting time.

Operational characteristic

Fluid	Flow rate at 6 bar with Δp=1 (Nl/min)	Responce time according to ISO 12238, activation time (ms)	Responce time according to ISO 12238, deactivation time (ms)	Max working pressure (bar)	Minimum piloting pressure (bar)	Weight (gr.)	Temperature °C
Filtered and lubricated air	3600	46	254	10	2,5	1360	-5 ÷ +50

Solenoid - Differential-5/2

Ordering code

1113.52.3.6.Ⓣ

Ⓣ	COIL VOLTAGE
	12P=24VDC

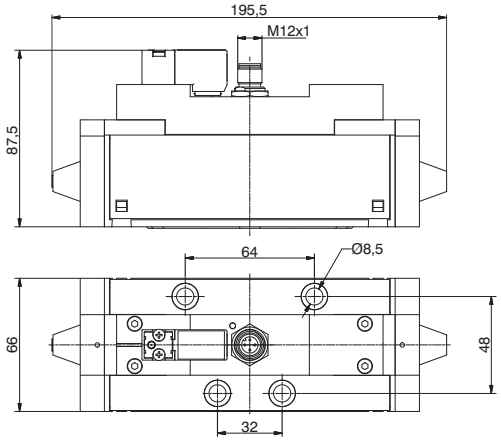

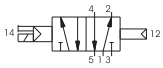

Shifting time of pneumatic directional control valves or moving parts, logic devices were measured in accordance to ISO 12238:2001, Pneumatic fluid power - Directional control valves - Measurement of shifting time.

Operational characteristic

Fluid	Flow rate at 6 bar with Δp=1 (Nl/min)	Responce time according to ISO 12238, activation time (ms)	Responce time according to ISO 12238, deactivation time (ms)	Max working pressure (bar)	Minimum piloting pressure (bar)	Weight (gr.)	Temperature °C
Filtered and lubricated air	3600	78	180	10	2	1360	-5 ÷ +50

Solenoid-Solenoid-5/2

Ordering code

1113.52.3.5.Ⓣ

Ⓣ	COIL VOLTAGE
	12P=24VDC

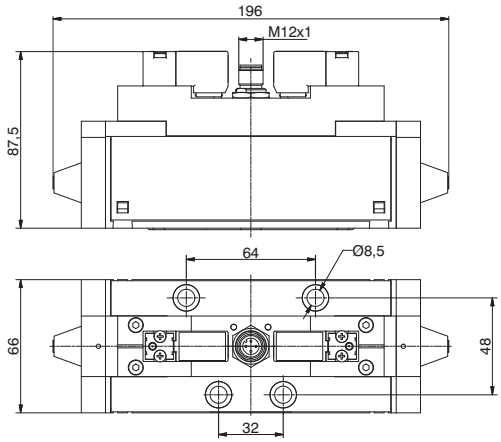

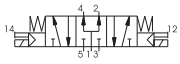

Shifting time of pneumatic directional control valves or moving parts, logic devices were measured in accordance to ISO 12238:2001, Pneumatic fluid power - Directional control valves - Measurement of shifting time.

Operational characteristic

Fluid	Flow rate at 6 bar with Δp=1 (Nl/min)	Responce time according to ISO 12238, activation time (ms)	Responce time according to ISO 12238, deactivation time (ms)	Max working pressure (bar)	Minimum piloting pressure (bar)	Weight (gr.)	Temperature °C
Filtered and lubricated air	3600	32	37	10	1,5	1370	-5 ÷ +50

Solenoid-Solenoid-5/3 (Closed centres)

Ordering code

1113.53.31.3.5.Ⓣ

Ⓣ	COIL VOLTAGE
	12P=24VDC

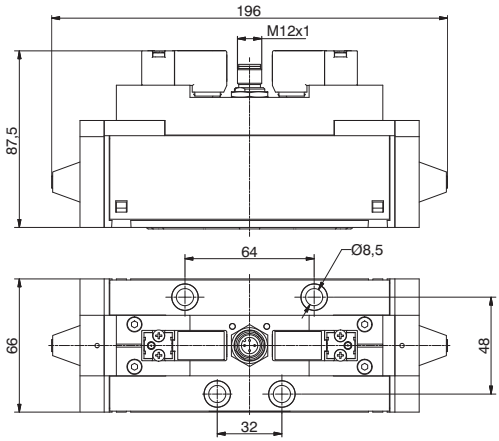

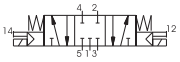

Shifting time of pneumatic directional control valves or moving parts, logic devices were measured in accordance to ISO 12238:2001, Pneumatic fluid power - Directional control valves - Measurement of shifting time.

Operational characteristic

Fluid	Flow rate at 6 bar with Δp=1 (Nl/min)	Responce time according to ISO 12238, activation time (ms)	Responce time according to ISO 12238, deactivation time (ms)	Max working pressure (bar)	Minimum piloting pressure (bar)	Weight (gr.)	Temperature °C
Filtered and lubricated air	3600	30	305	10	3	1380	-5 ÷ +50

Solenoid-Solenoid-5/3 (Open centres)

Ordering code

1113.53.32.3.5.Ⓣ

Ⓣ	COIL VOLTAGE
	12P=24VDC

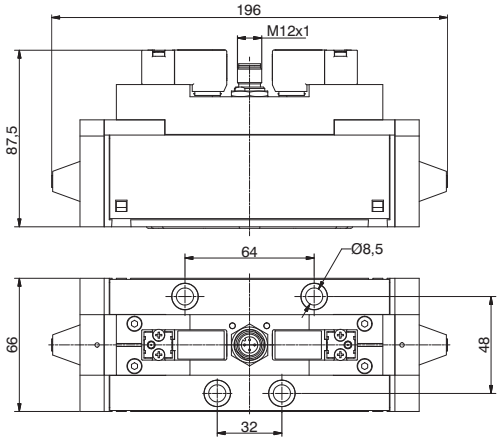

Shifting time of pneumatic directional control valves or moving parts, logic devices were measured in accordance to ISO 12238:2001, Pneumatic fluid power - Directional control valves - Measurement of shifting time.

Operational characteristic

Fluid	Flow rate at 6 bar with Δp=1 (Nl/min)	Responce time according to ISO 12238, activation time (ms)	Responce time according to ISO 12238, deactivation time (ms)	Max working pressure (bar)	Minimum piloting pressure (bar)	Weight (gr.)	Temperature °C
Filtered and lubricated air	3600	30	230	10	3	1380	-5 ÷ +50

Solenoid-Solenoid-5/3 (Pressured centres)

Ordering code

1113.53.33.3.5.Ⓣ

Ⓣ	COIL VOLTAGE
	12P=24VDC

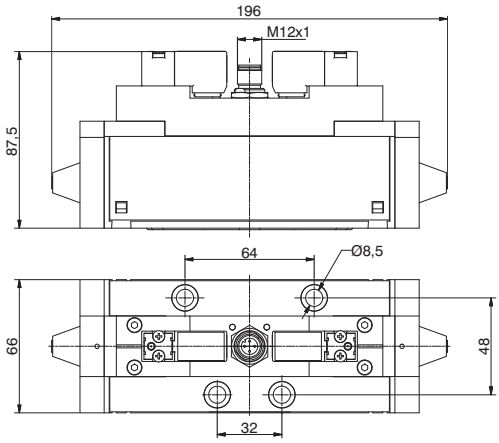

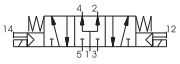

Shifting time of pneumatic directional control valves or moving parts, logic devices were measured in accordance to ISO 12238:2001, Pneumatic fluid power - Directional control valves - Measurement of shifting time.

Operational characteristic

Fluid	Flow rate at 6 bar with Δp=1 (Nl/min)	Responce time according to ISO 12238, activation time (ms)	Responce time according to ISO 12238, deactivation time (ms)	Max working pressure (bar)	Minimum piloting pressure (bar)	Weight (gr.)	Temperature °C
Filtered and lubricated air	3600	32	270	10	3	1380	-5 ÷ +50

General

The 2000 series solenoid valves have been developed to meet requirements for electronically controlled pneumatic systems and / or serial control systems already used in all manufacturing sectors.
They have been designed to be easily assembled into groups or manifolds and include integral electrical connection to facilitate simple and speedy integration into a control system. The series comprises a range of products classified according to type, size and performance. There are tree main sizes, 10mm., 18 mm. and 26 mm., with each size further divided into 3 types " LINE ", " FLAT " and " VDMA " or "BASE".
The 10mm. and 18 mm. 24 VDC range of valves includes a range of accessories for the production of manifolded valve assemblies with integral electrical connections. Modules are available in two or four station variants for flexibility and are supplied to IP40 or alternatively IP65 environmental protection.

Construction characteristics

	2100	2400	2600
Central body	Extruded aluminium bar with chemical nickel treatment and PTFE (polytetrafleurethylene)		
Connection plates	Technopolymer	Zincalloy	Die-cast aluminium
Operators	Technopolymer		
Spool	Aluminium 2011		
Piston seals	Oil resistant nitrile rubber - NBR		
Spool seals	Oil resistant nitrile rubber - HNBR		
Springs	Stainless steel AISI 302		
Piston	Aluminium 2011	Technopolymer	

Use and maintenance

The average life of the valve exceeds 50.000.000 cycles when used under optimum conditions.
Adequate lubrication reduces seals wear, just as proper filtering of supply air prevents the build-up of dirt that can cause malfunction. Ensure the valve is used within our recommended criteria for pressure and temperature. In dirty or dusty environments, the exhaust ports should be protected.
A seal kit including the spool is available for overhauling the valve. This operation does not require a skilled worker, although a particular care should be taken when reassembling the valve.

Ordering codes for minature solenoid valves

Series 2100:

The 10 mm. miniature solenoid valve with 0,7 mm. orifice has been selected for piloting this series of valves (see Series 300). This results in low response times and reduced power consumption. The valve can be supplied with the coil upward or downward depending on the application.
Codes are as follows:

Coil upward code
01 = miniature sol. 12 VDC 90°conn. with led
21 = miniature sol. 12 VDC line conn. with led
02 = miniature sol. 24 VDC 90°conn. with led
22 = miniature sol. 24 VDC line conn. with led

Coil downward code
11 = miniature sol. 12 VDC 90° conn. with led
31 = miniature sol. 12 VDC line conn. with led
12 = miniature sol. 24 VDC 90°conn. with led
32 = miniature sol. 24 VDC line conn. with led
91 = miniature sol. 12 VDC for integral electrical connections
92 = miniature sol. 24 VDC for integral electrical connections

Serie 2400/2600:

The 15 mm miniature solenoid valve with 1,1 mm. orifice has been selected for piloting this series of valves (see Series 300). This results in low response times and reduced power consumption. The valve can be supplied with the coil upward or downward depending on the application.
Codes are as follows:

Coil upward code
01 = miniature sol. 12 VDC
02 = miniature sol. 24 VDC
05 = miniature sol. 24 VAC
06 = miniature sol. 110 VAC
07 = miniature sol. 230 VAC
08 = miniature sol. 24 VDC 1W
09 = miniature sol. 24 VDC Earth faston

Coil downward code
11 = miniature sol. 12 VDC
12 = miniature sol. 24 VDC
15 = miniature sol. 24 VAC
16 = miniature sol. 110 VAC
17 = miniature sol. 230 VAC
18 = miniature sol. 24 VDC 1W Downward
19 = miniature sol. 24 VDC Earth faston Downward

	Well-tried component	- The product is a well-tried product for a safety-related application according to ISO 13849-1. - The relevant basic and well-tried safety principles according ISO 13849-2 for this product are fulfilled. - The suitability of the product for a precise application must be verified and confirmed by the user.
B_{10d}	50.000.000	

Miniature solenoid C UL US homologated are available (see Series 300).

Pneumatic - Spring

Ordering code
2115.52.00.19

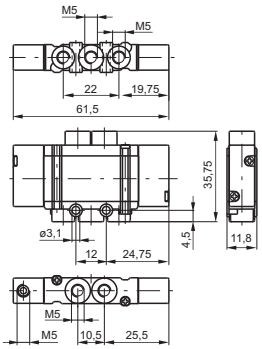

Weight gr. 30
Minimum piloting pressure 2 bar

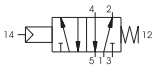

Operational characteristic	Fluid	Max working pressure (bar)	Temperature °C	Flow rate at 6 bar with Δp=1 (Nl/min)	Orifice size (mm)	Working ports size
	Filtered and lubricated air or not	7 bar	-5 - +50	250 Nl/min	mm 2,5	M5

Pneumatic - Differential

Ordering code
2115.52.00.16

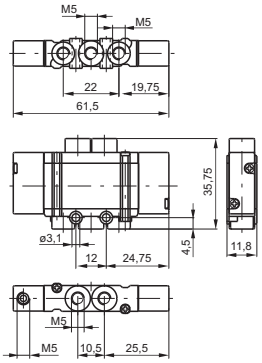

Weight gr. 28
Minimum piloting pressure 2 bar

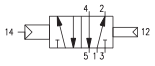

Operational characteristic	Fluid	Max working pressure (bar)	Temperature °C	Flow rate at 6 bar with Δp=1 (Nl/min)	Orifice size (mm)	Working ports size
	Filtered and lubricated air or not	7 bar	-5 - +50	250 Nl/min	mm 2,5	M5

Pneumatic - Pneumatic

Ordering code
2115.52.00.18

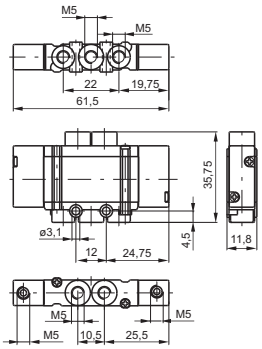

Weight gr. 30
Minimum piloting pressure 2 bar

Operational characteristic	Fluid	Max working pressure (bar)	Temperature °C	Flow rate at 6 bar with Δp=1 (Nl/min)	Orifice size (mm)	Working ports size
	Filtered and lubricated air or not	7 bar	-5 - +50	250 Nl/min	mm 2,5	M5

Solenoid - Spring / Solenoid - Differential

Ordering code

2115.52.00.Ⓟ.Ⓥ

	PILOTING
Ⓟ	39=Solenoid - Spring
	36=Solenoid - Differential
	COIL VOLTAGE
	01=12 VDC 90°conn. with led
	21=12 VDC line conn. with led
	02=24 VDC 90°conn. with led
	22=24 VDC line conn. with led
Ⓥ	11=12 VDC 90°conn. with led downward
	31=12 VDC line conn. with led downward
	12=24 VDC 90° conn. with led downward
	32=24 VDC line conn. with led downward

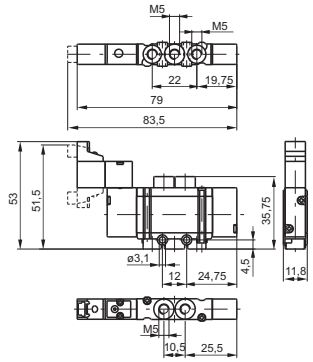

Weight gr. 42
Minimum working pressure 2 bar

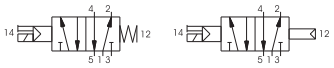

Weight gr. 40
Minimum operating pressure 2 bar

Operational characteristic	Fluid	Max working pressure (bar)	Temperature °C	Flow rate at 6 bar with Δp=1 (Nl/min)	Orifice size (mm)	Working ports size
	Filtered and lubricated air or not	7 bar	-5 - +50	250 Nl/min	mm 2,5	M5

Solenoid - Solenoid

Ordering code

2115.52.00.35.Ⓥ

	COIL VOLTAGE
	01=12 VDC 90°conn. With led
	21=12 VDC line conn. with led
	02=24 VDC 90°conn. with led
	22=24 VDC line conn. with led
Ⓥ	11=12 VDC 90°conn. with led downward
	31=12 VDC line conn. with led downward
	12=24 VDC 90° conn. with led downward
	32=24 VDC line conn. with led downward

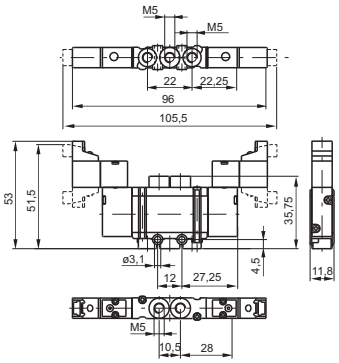

Weight gr. 52
Minimum working pressure 2 bar

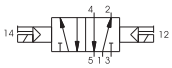

Operational characteristic	Fluid	Max working pressure (bar)	Temperature °C	Flow rate at 6 bar with Δp=1 (Nl/min)	Orifice size (mm)	Working ports size
	Filtered and lubricated air or not	7 bar	-5 - +50	250 Nl/min	mm 2,5	M5

Pneumatic - Pneumatic

Ordering code	
2115.53.Ⓕ.18	
Ⓕ	FUNCTION
	31=Closed centres
	32=Open centres
	33=Pressured centres

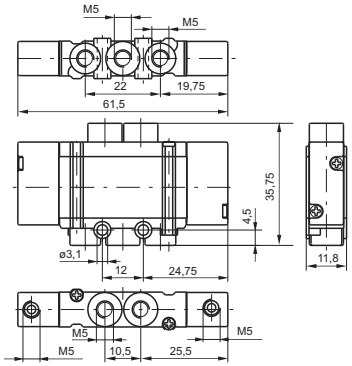

Weight gr. 32
Minimum working pressure 2,5 bar

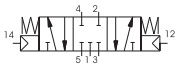

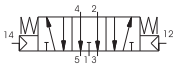

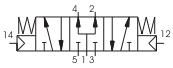

Operational characteristic	Fluid	Max working pressure (bar)	Temperature °C	Flow rate at 6 bar with Δp=1 (Nl/min)	Orifice size (mm)	Working ports size
	Filtered and lubricated air or not	7 bar	-5 - +50	180 Nl/min	mm 2,5	M5

Solenoid - Solenoid

Ordering code	
2115.53.Ⓕ.35.Ⓥ	
Ⓕ	FUNCTION
	31=Closed centres
	32=Open centres
	33=Pressured centres
Ⓥ	COIL VOLTAGE
	01=12 VDC 90°conn. with led
	21=12 VDC line conn. with led
	02=24 VDC 90° conn. with led
	22=24 VDC line conn. with led
	11=12 VDC 90° conn. whit led downward
	31=12 VDC line conn. with led downward
	12=24 VDC 90° conn. with led downward
	32=24 VDC line conn. with led downward

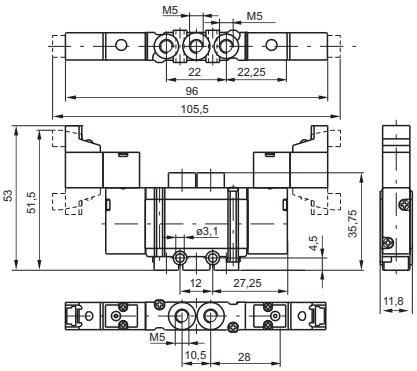

Weight gr. 54
Minimum working pressure 2,5 bar

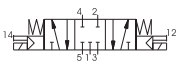

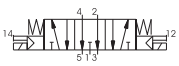

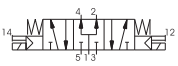

Operational characteristic	Fluid	Max working pressure (bar)	Temperature °C	Flow rate at 6 bar with Δp=1 (Nl/min)	Orifice size (mm)	Working ports size
	Filtered and lubricated air or not	7 bar	-5 - +50	180 Nl/min	mm 2,5	M5

2

Pneumatic - Spring

Ordering code

2135.52.00.19

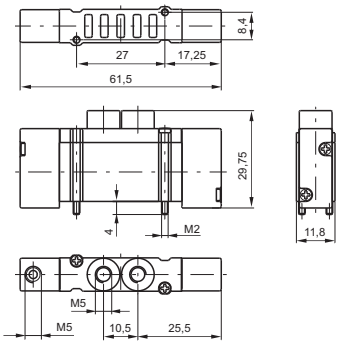

Weight gr. 32
Minimum piloting pressure 2 bar

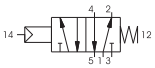

Operational characteristic	Fluid	Max working pressure (bar)	Temperature °C	Flow rate at 6 bar with Δp=1 (Nl/min)	Orifice size (mm)	Working ports size
	Filtered and lubricated air or not	7 bar	-5 - +50	250 Nl/min	mm 2,5	M5

Pneumatic - Differential

Ordering code

2135.52.00.16

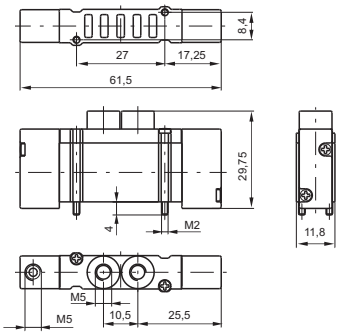

Weight gr. 30
Minimum piloting pressure 2 bar

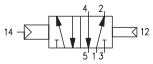

Operational characteristic	Fluid	Max working pressure (bar)	Temperature °C	Flow rate at 6 bar with Δp=1 (Nl/min)	Orifice size (mm)	Working ports size
	Filtered and lubricated air or not	7 bar	-5 - +50	250 Nl/min	mm 2,5	M5

Pneumatic - Pneumatic

Ordering code

2135.52.00.18

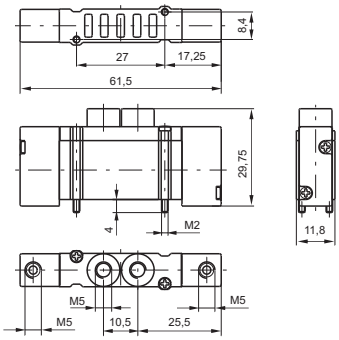

Weight gr. 32
Minimum piloting pressure 2,5 bar

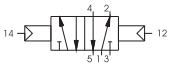

Operational characteristic	Fluid	Max working pressure (bar)	Temperature °C	Flow rate at 6 bar with Δp=1 (Nl/min)	Orifice size (mm)	Working ports size
	Filtered and lubricated air or not	7 bar	-5 - +50	250 Nl/min	mm 2,5	M5

Solenoid - Spring / Solenoid - Differential

Ordering code	
2135.52.00.Ⓟ.Ⓥ	
Ⓟ	PILOTING
	39=Solenoid - Spring
	36=Solenoid - Differential
Ⓥ	COIL VOLTAGE
	01=12 VDC 90°conn. with led
	21=12 VDC line conn. with led
	02=24 VDC 90°conn. with led
	22=24 VDC line conn. with led
	11=12 VDC 90°conn. with led downward
	31=12 VDC line conn. with led downward
	12=24 VDC 90° conn. with led downward
	32=24 VDC line conn. with led downward
	91=12 VDC for integral electrical connections downward
	92=24 VDC for integral electrical connections downward

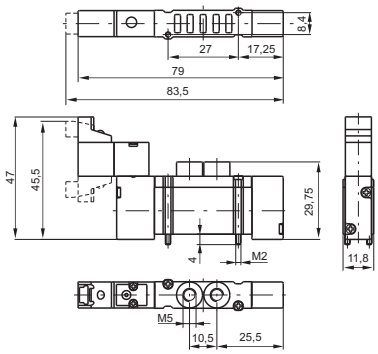

Weight gr. 38
Minimum working pressure 2 bar

Weight gr. 36
Minimum operating pressure 2 bar

Operational characteristic	Fluid	Max working pressure (bar)	Temperature °C	Flow rate at 6 bar with Δp=1 (Nl/min)	Orifice size (mm)	Working ports size
	Filtered and lubricated air or not	7 bar	-5 - +50	250 Nl/min	mm 2,5	M5

Solenoid - Solenoid

Ordering code	
2135.52.00.35.Ⓥ	
Ⓥ	COIL VOLTAGE
	01=12 VDC 90°conn. with led
	21=12 VDC line conn. with led
	02=24 VDC 90°conn. with led
	22=24 VDC line conn. with led
	11=12 VDC 90°conn. with led downward
	31=12 VDC line conn. with led downward
	12=24 VDC 90°conn. with led downward
	32=24 VDC line conn. with led downward
	91=12 VDC for integral electrical connections downward
	92=24 VDC for integral electrical connections downward

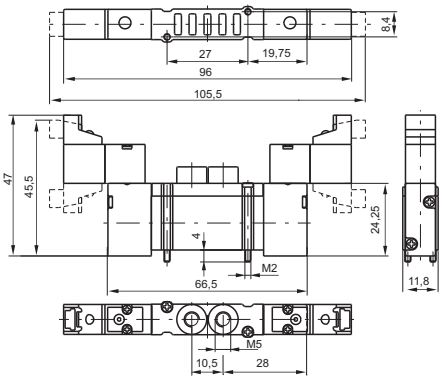

Weight gr. 50
Minimum working pressure 1,5 bar

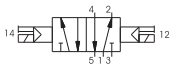

Operational characteristic	Fluid	Max working pressure (bar)	Temperature °C	Flow rate at 6 bar with Δp=1 (Nl/min)	Orifice size (mm)	Working ports size
	Filtered and lubricated air or not	7 bar	-5 - +50	250 Nl/min	mm 2,5	M5

2

Pneumatic - Pneumatic

Ordering code

2135.53.Ⓕ.18

Ⓕ	FUNCTION
	31=Closed centres
	32=Open centres
	33=Pressured centres

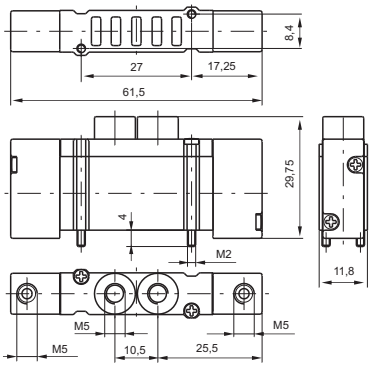

Weight gr. 28
Minimum working pressure 2 bar

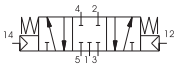

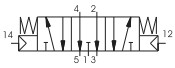

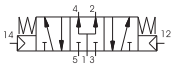

For dimension "A" see ordering code

Operational characteristic	Fluid	Max working pressure (bar)	Temperature °C	Flow rate at 6 bar with Δp=1 (Nl/min)	Orifice size (mm)	Working ports size
	Filtered and lubricated air or not	7 bar	-5 - +50	180 Nl/min	mm 2,5	M5

Solenoid - Solenoid

Ordering code

2135.53.Ⓕ.35.Ⓥ

Ⓕ	FUNCTION
	31=Closed centres
	32=Open centres
	33=Pressured centres
Ⓥ	COIL VOLTAGE
	01=12 VDC 90°conn. with led
	21=12 VDC line conn. with led
	02=24 VDC 90°conn. with led
	22=24 VDC line conn. with led
	11=12 VDC 90°conn. with led downward
	31=12 VDC line conn. with led downward
	12=24 VDC 90° conn. with led downward
	32=24 VDC line conn. with led downward
	91=12 VDC for integral electrical connections downward
	92=24 VDC for integral electrical connections downward

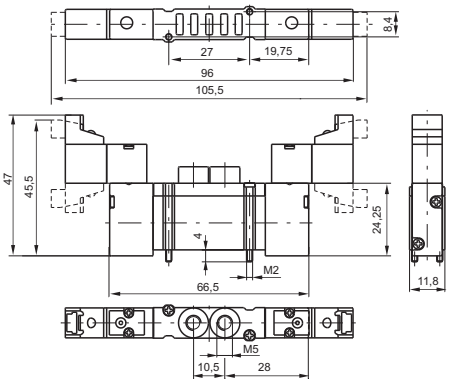

Weight gr. 52
Minimum operating pressure 2,5 bar

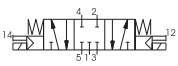

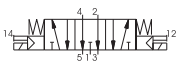

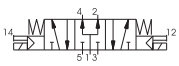

For dimension "A" see ordering code

Operational characteristic	Fluid	Max working pressure (bar)	Temperature °C	Flow rate at 6 bar with Δp=1 (Nl/min)	Orifice size (mm)	Working ports size
	Filtered and lubricated air or not	7 bar	-5 - +50	180 Nl/min	mm 2,5	M5

Pneumatic - Spring

Ordering code
2141.52.00.19

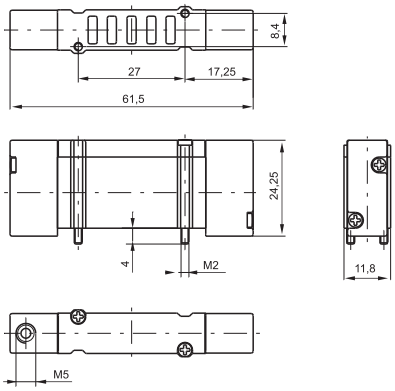

Weight gr. 24
Minimum piloting pressure 2 bar

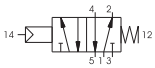

Operational characteristic	Fluid	Max working pressure (bar)	Temperature °C	Flow rate at 6 bar with Δp=1 (Nl/min)	Orifice size (mm)
	Filtered and lubricated air or not	7 bar	-5 - +50	250 Nl/min	mm 2,5

Pneumatic - Differential

Ordering code
2141.52.00.16

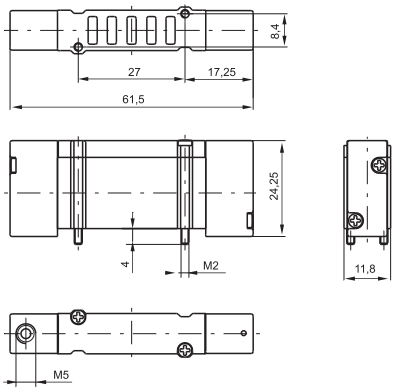

Weight gr. 22
Minimum piloting pressure 2 bar

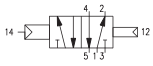

Operational characteristic	Fluid	Max working pressure (bar)	Temperature °C	Flow rate at 6 bar with Δp=1 (Nl/min)	Orifice size (mm)
	Filtered and lubricated air or not	7 bar	-5 - +50	250 Nl/min	mm 2,5

Pneumatic - Pneumatic

Ordering code
2141.52.00.18

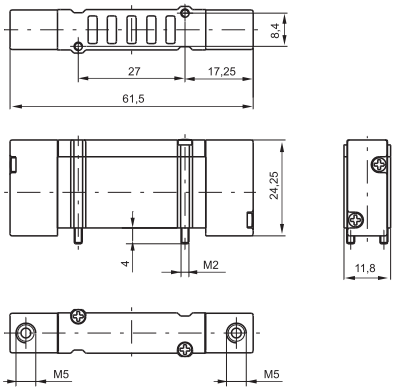

Weight gr. 26
Minimum piloting pressure 1,5 bar

Operational characteristic	Fluid	Max working pressure (bar)	Temperature °C	Flow rate at 6 bar with Δp=1 (Nl/min)	Orifice size (mm)
	Filtered and lubricated air or not	7 bar	-5 - +50	250 Nl/min	mm 2,5

Solenoid - Spring / Solenoid - Differential

Ordering code

2141.52.00.Ⓟ.Ⓥ

	PILOTING
Ⓟ	39=Solenoid - Spring
	36=Solenoid - Differential
	COIL VOLTAGE
	01=12 VDC 90°conn. with led
	21=12 VDC line conn. with led
	02=24 VDC 90°conn. with led
	22=24 VDC line conn. with led
	11=12 VDC 90°conn. with led downward
Ⓥ	31=12 VDC line conn. with led downward
	12=24 VDC 90° conn. with led downward
	32=24 VDC line conn. with led downward
	91=12 VDC for integral electrical connections downward
	92=24 VDC for integral electrical connections downward

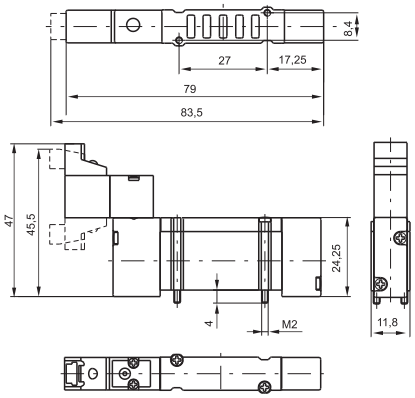

Weight gr. 38
Minimum working pressure 2 bar

Weight gr. 36
Minimum working pressure 2 bar

Operational characteristic	Fluid	Max working pressure (bar)	Temperature °C	Flow rate at 6 bar with Δp=1 (Nl/min)	Orifice size (mm)
	Filtered and lubricated air or not	7 bar	-5 - +50	250 Nl/min	mm 2,5

Miniature solenoid - Miniature solenoid

Ordering code

2141.52.00.35.Ⓥ

	COIL VOLTAGE
	01=12 VDC 90°conn. with led
	21=12 VDC line conn. with led
	02=24 VDC 90°conn. with led
	22=24 VDC line conn. with led
	11=12 VDC 90°conn. with led downward
Ⓥ	31=12 VDC line conn. with led downward
	12=24 VDC 90° conn. with led downward
	32=24 VDC line conn. with led downward
	91=12 VDC for integral electrical connections downward
	92=24 VDC for integral electrical connections downward

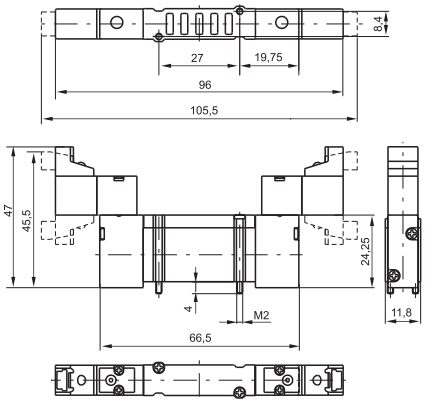

Weight gr. 48
Minimum working pressure 1,5 bar

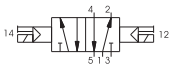

Operational characteristic	Fluid	Max working pressure (bar)	Temperature °C	Flow rate at 6 bar with Δp=1 (Nl/min)	Orifice size (mm)
	Filtered and lubricated air or not	7 bar	-5 - +50	250 Nl/min	mm 2,5

Pneumatic - Pneumatic

Ordering code	
2141.53.Ⓕ.18	
Ⓕ	FUNCTION
	31=Closed centres
	32=Open centres
	33=Pressured centres

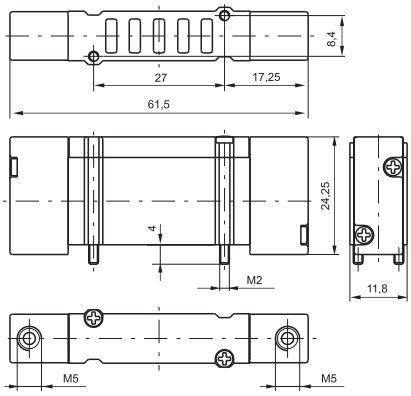

Weight gr. 28
Minimum working pressure 2 bar

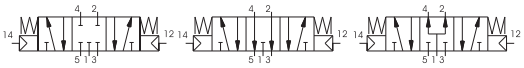

Operational characteristic	Fluid	Max working pressure (bar)	Temperature °C	Flow rate at 6 bar with Δp=1 (Nl/min)	Orifice size (mm)
	Filtered and lubricated air or not	7 bar	-5 - +50	180 Nl/min	mm 2,5

Solenoid - Solenoid

Ordering code	
2141.53.Ⓕ.35.Ⓥ	
Ⓕ	FUNCTION
	31=Closed centres
	32=Open centres
	33=Pressured centres
Ⓥ	COIL VOLTAGE
	01=12 VDC 90°conn. with led
	21=12 VDC line conn. with led
	02=24 VDC 90°conn. with led
	22=24 VDC line conn. with led
	11=12 VDC 90°conn. with led downward
	31=12 VDC line conn. with led downward
	12=24 VDC 90° conn. with led downward
	32=24 VDC line conn. with led downward
	91=12 VDC for integral electrical connections downward
	92=24 VDC for integral electrical connections downward

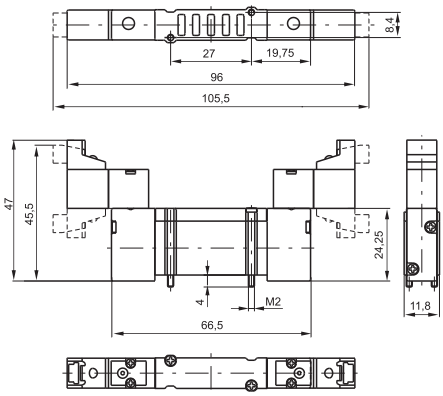

Weight gr. 52
Minimum working pressure 2,5 bar

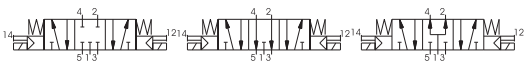

Operational characteristic	Fluid	Max working pressure (bar)	Temperature °C	Flow rate at 6 bar with Δp=1 (Nl/min)	Orifice size (mm)
	Filtered and lubricated air or not	7 bar	-5 - +50	180 Nl/min	mm 2,5

2

Modular base for "BASE" version

Ordering code
214Ⓣ.01

	TYPE
Ⓣ	0=modular BASE without cartridges
	4=modular BASE c/w with 4 mm tube cartridges
	5=modular BASE c/w with M5 cartridges
	7=modular BASE c/w with M7x1 cartridges

Weight gr. 22

For dimension "A" see ordering code

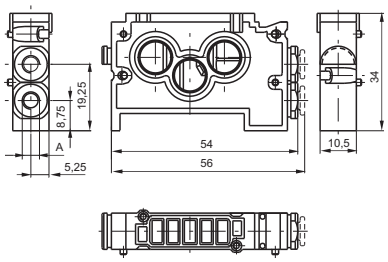

Modular base for "BASE" version, with 6mm tube cartridges

Ordering code
2146.01

Weight gr. 22

For dimension "A" see ordering code

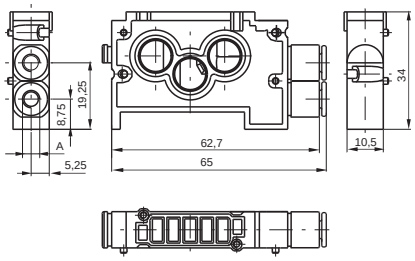

Modular base for "FLAT" version

Ordering code
2130.01

Weight gr. 28

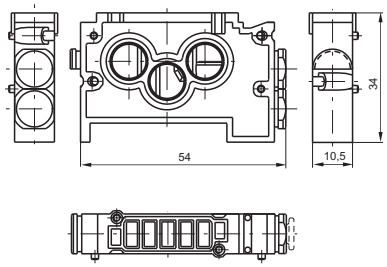

Right inlet base

Ordering code
2140.02

Weight gr. 18

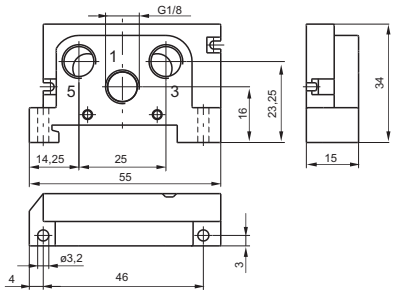

Left inlet base

Ordering code
2140.03

Weight gr. 18

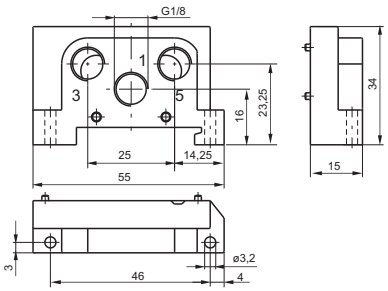

Closing plate

Ordering code
2130.00

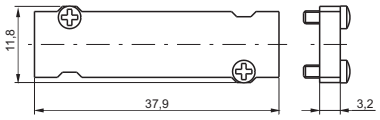

Weight gr. 7

Intermediate air intake

Ordering code
2130.10

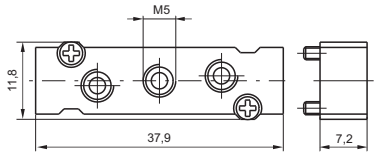

Weight gr. 12
to be assembled of a valve

DIN rail adapter

Ordering code
2130.16

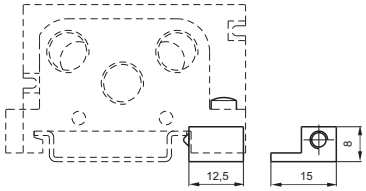

Weight gr. 6

Modular base cartridge

Ordering code
2100.Ⓣ

	TYPE
Ⓣ	031M=4mm tube cartridges
	033M=M5 cartridges
	034M=M7x1 cartridges
	035M=lock cartridges
	036M=6mm tube cartridges

Weight gr. 5

Diaphragm plug

Ordering code
2130.17

Weight gr. 6

2

The integral electrical design for the series 2400 valve is extremely flexible, allowing the production of pre-wired solenoid valve manifolds, the configuration of which can be determined at the point of assembly. The 24 VDC, 12 VDC (equivalent PNP) modules are available with 2 or 4 positions. The system assembled is designed for an IP40 - IP65 protection.
Coil type 91 or 92 is required for the multipin electrical connection (see valve ordering codes).

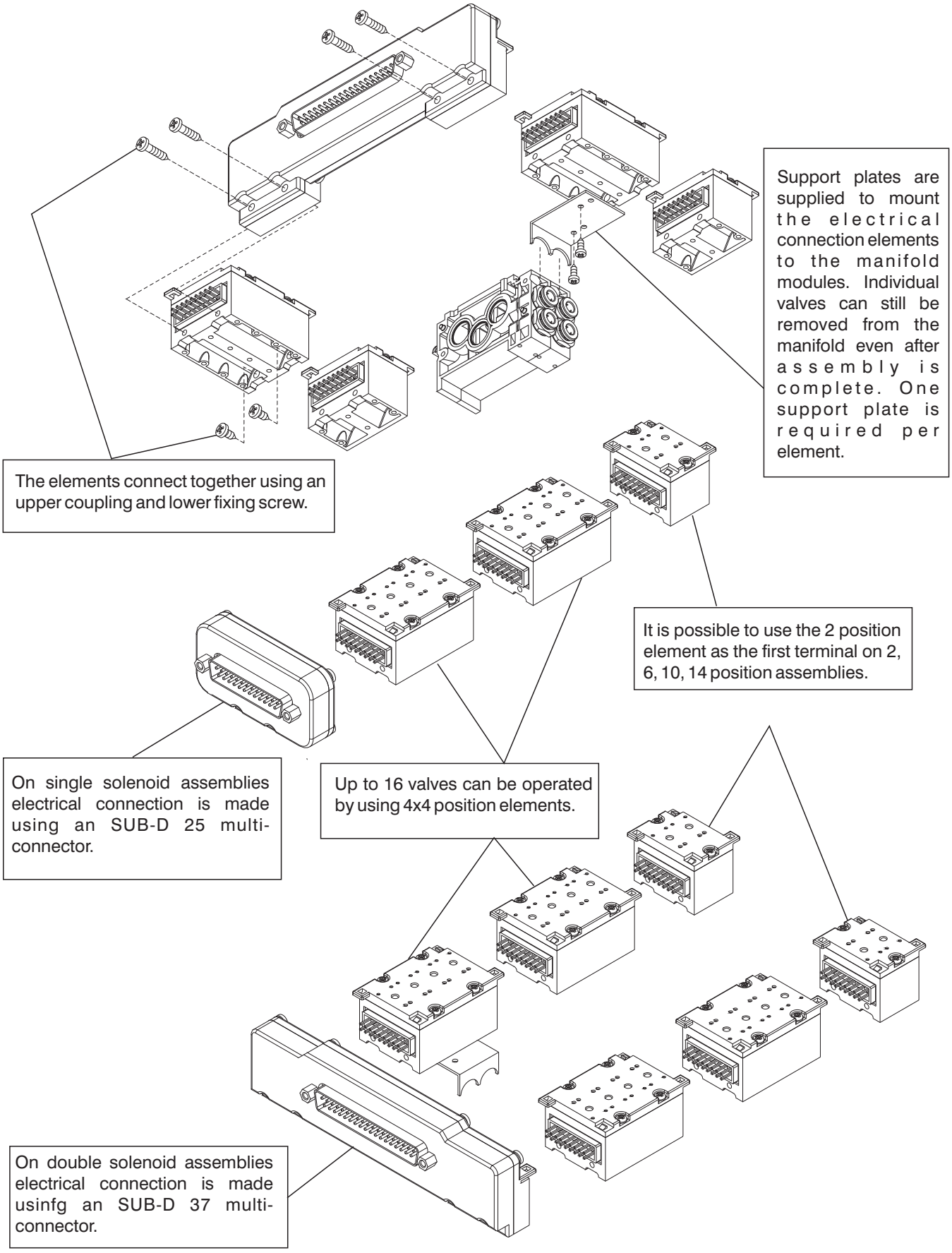

4 positions module

Weight gr. 35

Ordering code	
2100.Ⓟ.Ⓣ	
Ⓟ	PLACES
	04=4 Places
	02=2 Places
Ⓣ	TYPE
	00=left IP40-PNP
	02=left IP40-PNP with protection diode
	10=left IP65-PNP
	12=left IP65-PNP with protection diode
	01=right IP40-PNP
	03= right IP40-PNP with protection diode
	11=right IP65-PNP
	13=right IP65-PNP with protection diode

2 positions module

Weight gr. 20

Front connector IP65 - 37 poles

Ordering code
2100.37.10

Weight gr. 120
The IP65 protection is obtained by IP65 Pneumax cable

Front connector IP65 - 25 poles

Ordering code
2100.25.10

Weight gr. 40
The IP65 protection is obtained by IP65 Pneumax cable

Plug

Ordering code
2100.00

Weight gr. 4

FLAT support plate

Ordering code
2130.50

Weight gr. 5

In line cable complete with connector IP40

Ordering code
2400.Ⓣ.Ⓛ.00

Ⓣ	CONNECTOR TYPE
	25=25 contacts
	37=37 contacts
Ⓛ	CABLE LENGTH
	03=3 meters
	05=5 meters
	10=10 meters

Cable complete with connector, 25 Poles IP65

Ordering code
2300.25.Ⓛ.Ⓒ

Ⓛ	CABLE LENGTH
	03=3 meters
	05=5 meters
	10=10 meters
Ⓒ	CONNECTOR
	10=In line
	90=a 90°

Cable complete with connector, 37 Poles IP65

Ordering code
2400.37.Ⓛ.Ⓒ

Ⓛ	CABLE LENGTH
	03=3 meters
	05=5 meters
	10=10 meters
Ⓒ	CONNECTOR
	10=In line
	90=a 90°

2

SUB-D 25 CONTACTS CONNECTOR

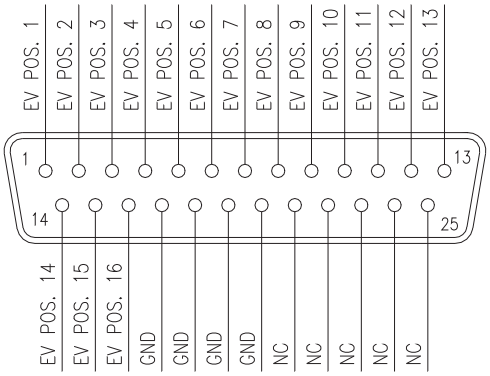

SUB-D 37 CONTACTS CONNECTOR

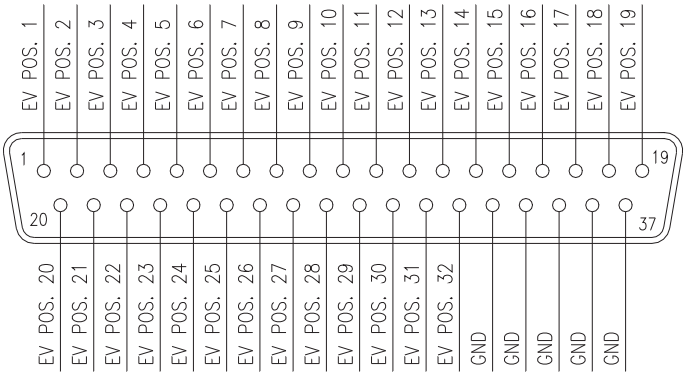

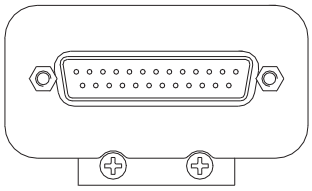

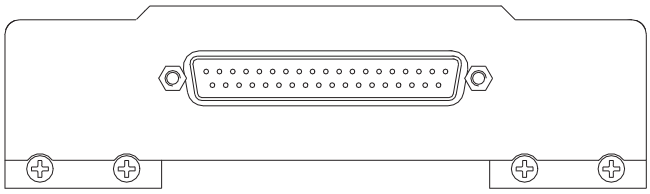

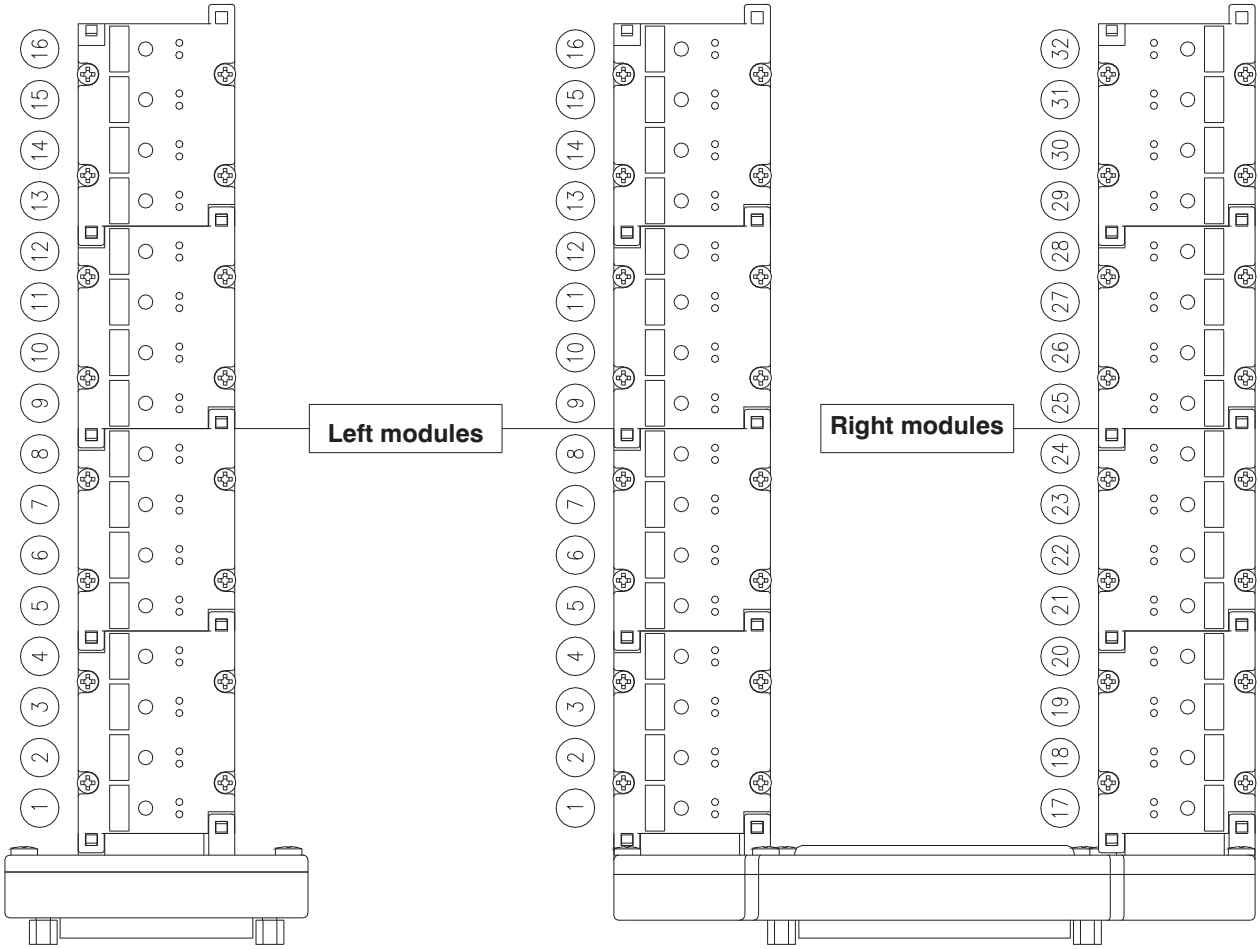

Pneumatic - Spring

Ordering code

241Ⓐ.52.00.19

Ⓐ	CONNECTIONS
	1=G1/4"
	5=G1/8"
	6=quick fitting tube Ø6
	8=quick fitting tube Ø8

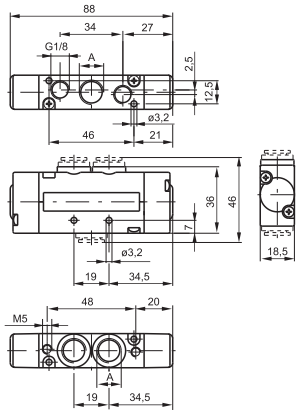

For dimension "A" see ordering code

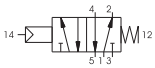

Operational characteristic

Fluid	Flow rate at 6 bar with Δp=1 (Nl/min)	Max working pressure (bar)	Orifice size (mm)	Pilot ports size	Minimum piloting pressure (bar)	Weight (gr.)	Temperature °C
Filtered air, with or without lubrication	800	10	7	M5	2	155	-5 ÷ +50

Pneumatic - Differential / Differential external

Ordering code

241Ⓐ.52.00.Ⓥ

Ⓐ	CONNECTIONS
	1=G1/4"
	5=G1/8"
	6=quick fitting tube Ø6
	8=quick fitting tube Ø8
Ⓥ	VERSION
	16=Pneumatic - Differential
	17=Pneumatic - Differential ext.

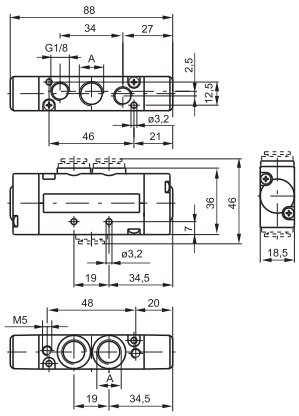

For dimension "A" see ordering code

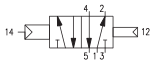

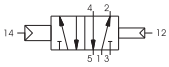

Operational characteristic

Fluid	Flow rate at 6 bar with Δp=1 (Nl/min)	Max working pressure (bar)	Orifice size (mm)	Pilot ports size	Minimum piloting pressure (bar)	Weight (gr.)	Temperature °C
Filtered air, with or without lubrication	800	10	7	M5	2	155	-5 ÷ +50

Pneumatic - Pneumatic

Ordering code

241Ⓐ.52.00.18

Ⓐ	CONNECTIONS
	1=G1/4"
	5=G1/8"
	6=quick fitting tube Ø6
	8=quick fitting tube Ø8

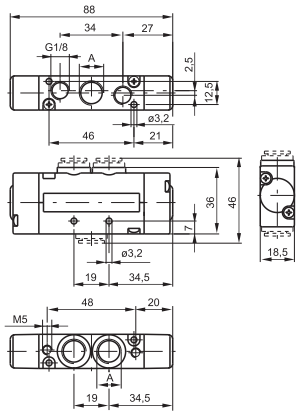

For dimension "A" see ordering code

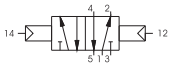

Operational characteristic

Fluid	Flow rate at 6 bar with Δp=1 (Nl/min)	Max working pressure (bar)	Orifice size (mm)	Pilot ports size	Minimum piloting pressure (bar)	Weight (gr.)	Temperature °C
Filtered air, with or without lubrication	800	10	7	M5	1,5	155	-5 ÷ +50

Miniature solenoid - Spring / Differential

Ordering code

241Ⓐ.52.00.Ⓥ.Ⓣ

	CONNECTIONS
	1=G1/4"
Ⓐ	5=G1/8"
	6=quick fitting tube Ø6
	8=quick fitting tube Ø8
	VERSION
	39=Sv. - Spring
	29=Sv. ext. - Spring
Ⓥ	36=Sv. - Diff./al
	37=Sv. ext. - Diff./al ext.
	26=Sv. ext. - Diff./al
	27=Sv. ext. - Diff./al ext.
	COIL VOLTAGE
	01=12V DC
	02=24V DC
	05=24V AC
	06=110V AC
	07=230V AC
	08=24V DC 1 Watt
Ⓣ	09=24V DC Earth Faston
	11=12V DC Downward
	12=24V DC Downward
	15=24V AC Downward
	16=110V AC Downward
	17= 230V AC Downward
	18=24V DC 1 Watt Downward
	19=24V DC Earth Faston Downward

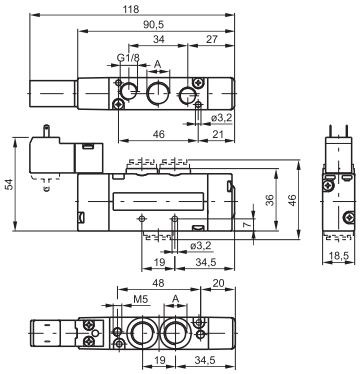

For dimension "A" see ordering code

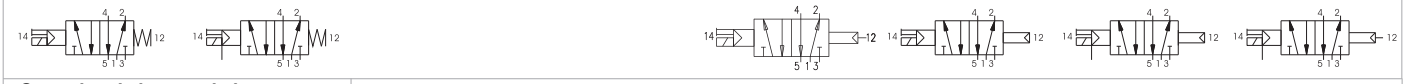

Operational characteristic

Fluid	Flow rate at 6 bar with Δp=1 (Nl/min)	Max working pressure (bar)	Orifice size (mm)	Pilot ports size	Minimum piloting pressure (bar)	Weight (gr.)	Temperature °C
Filtered air, with or without lubrication	800	10	7	M5	2	195	-5 ÷ +50

Miniature solenoid - Miniature solenoid

Ordering code

241Ⓐ.52.00.Ⓥ.Ⓣ

	CONNECTIONS
	1=G1/4"
Ⓐ	5=G1/8"
	6=quick fitting tube Ø6
	8=quick fitting tube Ø8
	VERSION
Ⓥ	35=Sol. - Sol.
	24=Sol. ext. - Sol. ext.
	COIL VOLTAGE
	01=12V DC
	02=24V DC
	05=24V AC
	06=110V AC
	07=230V AC
	08=24V DC 1 Watt
Ⓣ	09=24V DC Earth Faston
	11=12V DC Downward
	12=24V DC Downward
	15=24V AC Downward
	16=110V AC Downward
	17= 230V AC Downward
	18=24V DC 1 Watt Downward
	19=24V DC Earth Faston
	19=24V DC Earth Faston

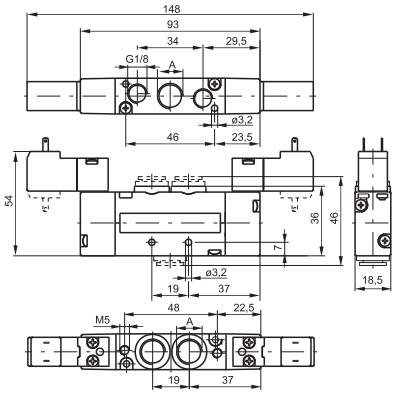

For dimension "A" see ordering code

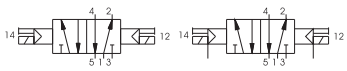

Operational characteristic

Fluid	Flow rate at 6 bar with Δp=1 (Nl/min)	Max working pressure (bar)	Orifice size (mm)	Pilot ports size	Minimum piloting pressure (bar)	Weight (gr.)	Temperature °C
Filtered air, with or without lubrication	800	10	7	M5	1,5	225	-5 ÷ +50

Pneumatic - Pneumatic

Ordering code

241Ⓐ.53.Ⓕ.18

Ⓐ	CONNECTIONS
	1=G1/4"
	5=G1/8"
	6=quick fitting tube Ø6
	8=quick fitting tube Ø8
Ⓕ	FUNCTION
	31=Closed centres
	32=Open centres
	33=Pressured centres

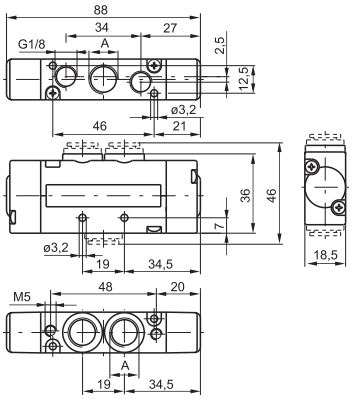

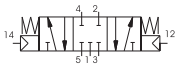

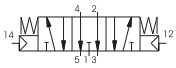

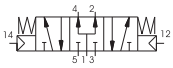

For dimension "A" see ordering code

Operational characteristic

Fluid	Flow rate at 6 bar with Δp=1 (Nl/min)	Max working pressure (bar)	Orifice size (mm)	Pilot ports size	Minimum piloting pressure (bar)	Weight (gr.)	Temperature °C
Filtered air, with or without lubrication	650	10	7	M5	3	165	-5 ÷ +50

Miniature solenoid - Miniature solenoid

Ordering code

241Ⓐ.53.Ⓕ.Ⓥ.Ⓣ

Ⓐ	CONNECTIONS
	1=G1/4"
	5=G1/8"
	6=quick fitting tube Ø6
	8=quick fitting tube Ø8
Ⓕ	FUNCTION
	31=Closed centres
	32=Open centres
	33=Pressured centres
Ⓥ	VERSION
	24=Sol. ext. - Sol. ext.
	35=Sol. - Sol.
Ⓣ	COIL VOLTAGE
	01=12V DC
	02=24V DC
	05=24V AC
	06=110V AC
	07=230V AC
	08=24V DC 1 Watt
	09=24V DC Earth Faston
	11=12V DC Downward
	12=24V DC Downward
	15=24V AC Downward
	16=110V AC Downward
	17= 230V AC Downward
	18=24V DC 1 Watt Downward
	19=24V DC Earth Faston Downward

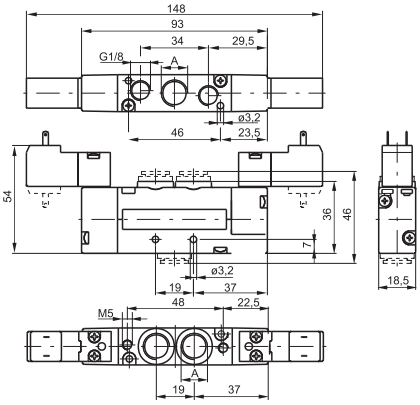

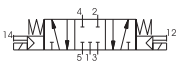

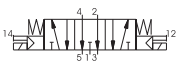

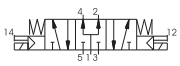

For dimension "A" see ordering code

Operational characteristic

Fluid	Flow rate at 6 bar with Δp=1 (Nl/min)	Max working pressure (bar)	Orifice size (mm)	Pilot ports size	Minimum piloting pressure (bar)	Weight (gr.)	Temperature °C
Filtered air, with or without lubrication	650	10	7	M5	3	235	-5 ÷ +50

Pneumatic - Pneumatic

Ordering code

241Ⓐ.62.Ⓕ.18

Ⓐ	CONNECTIONS
	1=G1/4"
	5=G1/8"
	6=quick fitting tube Ø6
	8=quick fitting tube Ø8
Ⓕ	FUNCTION
	44=2 Coils 3/2 NC
	45=1 Coil 3/2 NC (14) + 1 Coil 3/2 NO (12)
	55=2 Coils 3/2 NO
	54=1 Coil 3/2 NO (14) + 1 Coil 3/2 NC (12)

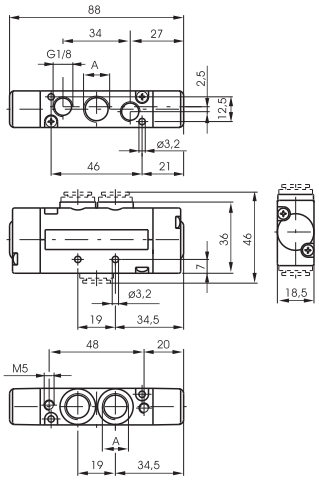

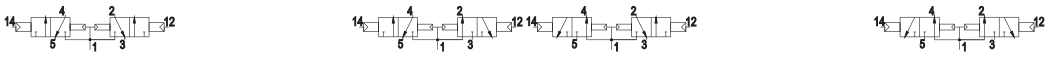

Operational characteristic		Example: if inlet pressure is set at 5bar then pilot pressure must be at least Pp=1,5+(0.2*5)=2,5bar					
Fluid	Flow rate at 6 bar with Δp=1 (Nl/min)	Max working pressure (bar)	Orifice size (mm)	Temperature °C	Minimum piloting pressure (bar)	Weight (gr.)	For dimension "A":
Filtered air, with or without lubrication	450	10	7	-5 ÷ +50	≥1,5+(0,2xP.alim.)	170	see ordering code

Miniature solenoid - Miniature solenoid

Ordering code

241Ⓐ.62.Ⓕ.35.Ⓣ

Ⓐ	CONNECTIONS
	1=G1/4"
	5=G1/8"
	6=quick fitting tube Ø6
	8=quick fitting tube Ø8
Ⓕ	FUNCTION
	44=2 Coils 3/2 NC
	45=1 Coil 3/2 NC (14) + 1 Coil 3/2 NO (12)
	55=2 Coils 3/2 NO
	54=1 Coil 3/2 NO (14) + 1 Coil 3/2 NC (12)
Ⓣ	COIL VOLTAGE
	01=12V DC
	02=24V DC
	05=24V AC
	06=110V AC
	07=230V AC
	08=24V DC 1 Watt
	09=24V DC Earth Faston
	11=12V DC Downward
	12=24V DC Downward
	15=24V AC Downward
	16=110V AC Downward
	17= 230V AC Downward
	18=24V DC 1 Watt Downward
	19=24V DC Earth Faston Downward

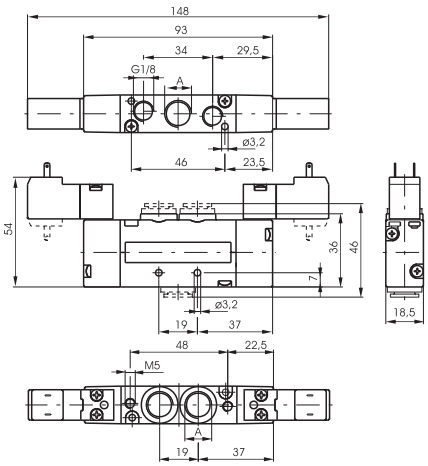

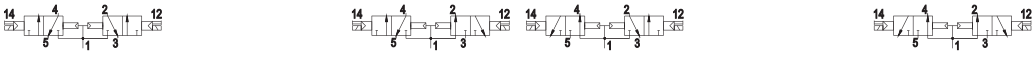

Operational characteristic		Example: if inlet pressure is set at 5bar then pilot pressure must be at least Pp=1,5+(0.2*5)=2,5bar					
Fluid	Flow rate at 6 bar with Δp=1 (Nl/min)	Max working pressure (bar)	Orifice size (mm)	Temperature °C	Minimum piloting pressure (bar)	Weight (gr.)	For dimension "A":
Filtered air, with or without lubrication	450	10	7	-5 ÷ +50	≥1,5+(0,2xP.alim.)	250	see ordering code

Pneumatic - Spring

Ordering code	
243Ⓐ.52.00.19	
Ⓐ	CONNECTIONS
	1=G1/4"
	5=G1/8"
	6=quick fitting tube Ø6
	8=quick fitting tube Ø8

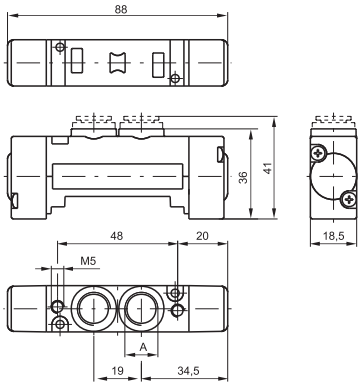

For dimension "A" see ordering code

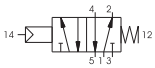

Operational characteristic

Fluid	Flow rate at 6 bar with Δp=1 (Nl/min)	Max working pressure (bar)	Orifice size (mm)	Pilot ports size	Minimum piloting pressure (bar)	Weight (gr.)	Temperature °C
Filtered air, with or without lubrication	800	10	7	M5	2	105	-5 ÷ +50

Pneumatic - Differential / Differential external

Ordering code	
243Ⓐ.52.00.Ⓥ	
Ⓐ	CONNECTIONS
	1=G1/4"
	5=G1/8"
	6=quick fitting tube Ø6
	8=quick fitting tube Ø8
Ⓥ	VERSION
	16=Pneumatic - Differential
	17=Pneumatic Differential ext.

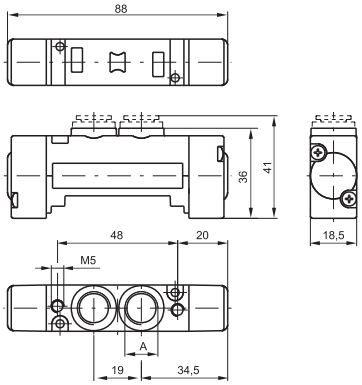

For dimension "A" see ordering code

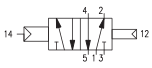

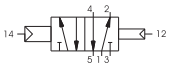

Operational characteristic

Fluid	Flow rate at 6 bar with Δp=1 (Nl/min)	Max working pressure (bar)	Orifice size (mm)	Pilot ports size	Minimum piloting pressure (bar)	Weight (gr.)	Temperature °C
Filtered air, with or without lubrication	800	10	7	M5	2	105	-5 ÷ +50

Pneumatic - Pneumatic

Ordering code	
243Ⓐ.52.00.18	
Ⓐ	CONNECTIONS
	1=G1/4"
	5=G1/8"
	6=quick fitting tube Ø6
	8=quick fitting tube Ø8

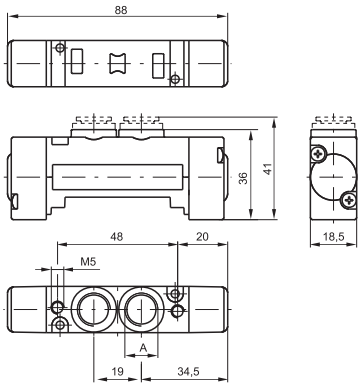

For dimension "A" see ordering code

Operational characteristic

Fluid	Flow rate at 6 bar with Δp=1 (Nl/min)	Max working pressure (bar)	Orifice size (mm)	Pilot ports size	Minimum piloting pressure (bar)	Weight (gr.)	Temperature °C
Filtered air, with or without lubrication	800	10	7	M5	1,5	105	-5 ÷ +50

Miniature solenoid - Spring / Differential

Ordering code

243Ⓐ.52.00.Ⓥ.Ⓣ

	CONNECTIONS
Ⓐ	1=G1/4"
	5=G1/8"
	6=quick fitting tube Ø6
	8=quick fitting tube Ø8
	VERSION
Ⓥ	39=Sol. - Spring
	29=Sol. ext. - Spring
	36=Sol. - Differ.
	37=Sol. ext. - Differ. ext.
	26=Sol. ext. - Differ.
	27=Sol. ext. - Differ. ext.
	COIL VOLTAGE
	01=12V DC
	02=24V DC
	05=24V AC
	06=110V AC
	07=230V AC
	08=24V DC 1 Watt
Ⓣ	09=24V DC Earth Faston
	11=12V DC Downward
	12=24V DC Downward
	15=24V AC Downward
	16=110V AC Downward
	17= 230V AC Downward
	18=24V DC 1 Watt Downward
	19=24V DC Earth Faston Downward

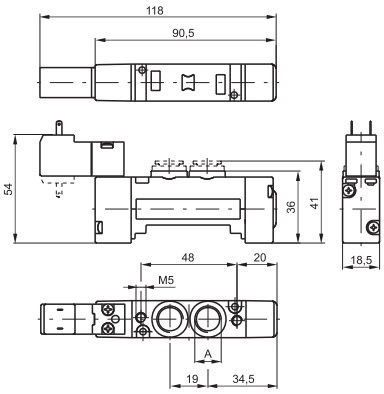

For dimension "A" see ordering code

Operational characteristic

Fluid	Flow rate at 6 bar with Δp=1 (Nl/min)	Max working pressure (bar)	Orifice size (mm)	Pilot ports size	Minimum piloting pressure (bar)	Weight (gr.)	Temperature °C
Filtered air, with or without lubrication	800	10	7	M5	2	140	-5 ÷ +50

Miniature solenoid - Miniature solenoid

Ordering code

243Ⓐ.52.00.Ⓥ.Ⓣ

	CONNECTIONS
Ⓐ	1=G1/4"
	5=G1/8"
	6=quick fitting tube Ø6
	8=quick fitting tube Ø8
	VERSION
Ⓥ	35=Sol. - Sol.
	24=Sol. ext. - Sol. ext.
	COIL VOLTAGE
	01=12V DC
	02=24V DC
	05=24V AC
	06=110V AC
	07=230V AC
	08=24V DC 1 Watt
Ⓣ	09=24V DC Earth Faston
	11=12V DC Downward
	12=24V DC Downward
	15=24V AC Downward
	16=110V AC Downward
	17= 230V AC Downward
	18=24V DC 1 Watt Downward
	19=24V DC Earth Faston Downward

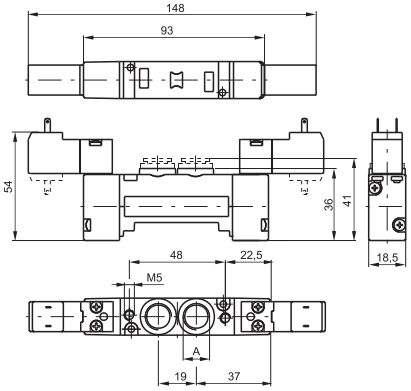

For dimension "A" see ordering code

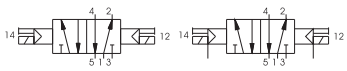

Operational characteristic

Fluid	Flow rate at 6 bar with Δp=1 (Nl/min)	Max working pressure (bar)	Orifice size (mm)	Pilot ports size	Minimum piloting pressure (bar)	Weight (gr.)	Temperature °C
Filtered air, with or without lubrication	800	10	7	M5	1,5	175	-5 ÷ +50

Pneumatic - Pneumatic

Ordering code

243Ⓐ.53.Ⓕ.18

Ⓐ	CONNECTIONS
	1=G1/4"
	5=G1/8"
	6=quick fitting tube Ø6
	8=quick fitting tube Ø8
Ⓕ	FUNCTION
	31=Closed centres
	32=Open centres
	33=Pressured centres

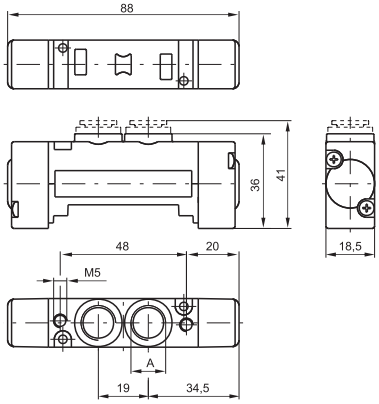

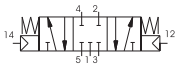

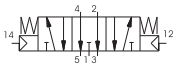

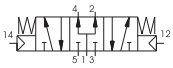

For dimension "A" see ordering code

Operational characteristic

Fluid	Flow rate at 6 bar with Δp=1 (Nl/min)	Max working pressure (bar)	Orifice size (mm)	Pilot ports size	Minimum piloting pressure (bar)	Weight (gr.)	Temperature °C
Filtered air, with or without lubrication	650	10	7	M5	3	115	-5 ÷ +50

Miniature solenoid - Miniature solenoid

Ordering code

243Ⓐ.53.Ⓕ.Ⓥ.Ⓣ

Ⓐ	CONNECTIONS
	1=G1/4"
	5=G1/8"
	6=quick fitting tube Ø6
	8=quick fitting tube Ø8
Ⓕ	FUNCTION
	31=Closed centres
	32=Open centres
	33=Pressured centres
Ⓥ	VERSION
	24=Sol. ext. - Sol. ext.
	35=Sol. - Sol.
Ⓣ	COIL VOLTAGE
	01=12V DC
	02=24V DC
	05=24V AC
	06=110V AC
	07=230V AC
	08=24V DC 1 Watt
	09=24V DC Earth Faston
	11=12V DC Downward
	12=24V DC Downward
	15=24V AC Downward
	16=110V AC Downward
	17= 230V AC Downward
	18=24V DC 1 Watt Downward
	19=24V DC Earth Faston Downward

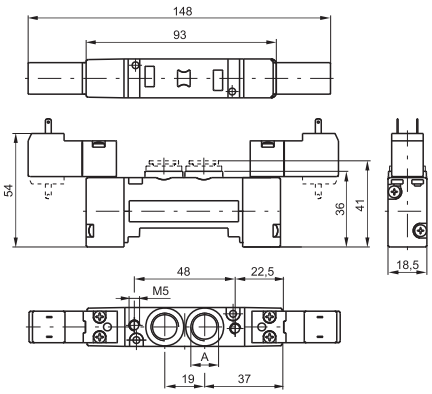

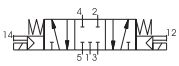

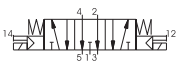

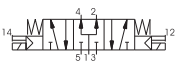

For dimension "A" see ordering code

Operational characteristic

Fluid	Flow rate at 6 bar with Δp=1 (Nl/min)	Max working pressure (bar)	Orifice size (mm)	Pilot ports size	Minimum piloting pressure (bar)	Weight (gr.)	Temperature °C
Filtered air, with or without lubrication	650	10	7	M5	3	185	-5 ÷ +50

Pneumatic - Pneumatic

Ordering code

243Ⓐ.62.Ⓥ.18

Ⓐ	CONNECTIONS
	1=G1/4"
	5=G1/8"
	6=quick fitting tube Ø6
	8=quick fitting tube Ø8
Ⓥ	VERSION
	44=2 Coils 3/2 NC
	45=1 Coil 3/2 NC (14) + 1 Coil 3/2 NO (12)
	55=2 Coils 3/2 NO
	54=1 Coil 3/2 NO (14) + 1 Coil 3/2 NC (12)

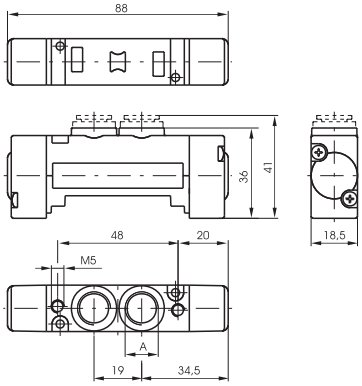

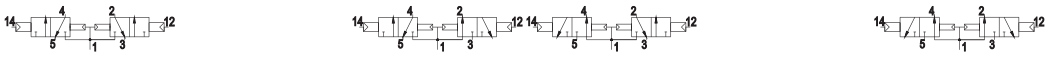

Operational characteristic		Example: if inlet pressure is set at 5bar then pilot pressure must be at least Pp=1,5+(0.2*5)=2,5bar					
Fluid	Flow rate at 6 bar with Δp=1 (Nl/min)	Max working pressure (bar)	Orifice size (mm)	Temperature °C	Minimum piloting pressure (bar)	Weight (gr.)	For dimension "A":
Filtered air, with or without lubrication	450	10	7	-5 ÷ +50	≥1,5+(0,2xP.alim.)	110	see ordering code

Miniature solenoid - Miniature solenoid

Ordering code

243Ⓐ.62.Ⓥ.35.Ⓣ

Ⓐ	CONNECTIONS
	1=G1/4"
	5=G1/8"
	6=quick fitting tube Ø6
	8=quick fitting tube Ø8
Ⓥ	VERSION
	44=2 Coils 3/2 NC
	45=1 Coil 3/2 NC (14) + 1 Coil 3/2 NO (12)
	55=2 Coils 3/2 NO
	54=1 Coil 3/2 NO (14) + 1 Coil 3/2 NC (12)
Ⓣ	COIL VOLTAGE
	01=12V DC
	02=24V DC
	05=24V AC
	06=110V AC
	07=230V AC
	08=24V DC 1 Watt
	09=24V DC Earth Faston
	11=12V DC Downward
	12=24V DC Downward
	15=24V AC Downward
	16=110V AC Downward
	17= 230V AC Downward
	18=24V DC 1 Watt Downward
	19=24V DC Earth Faston Downward

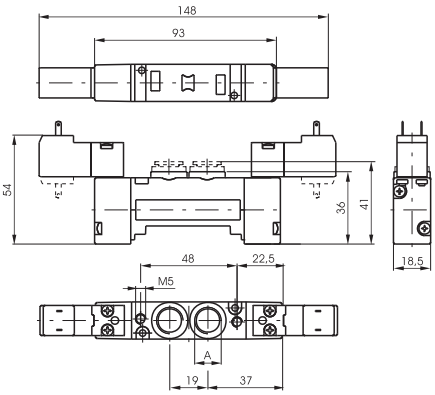

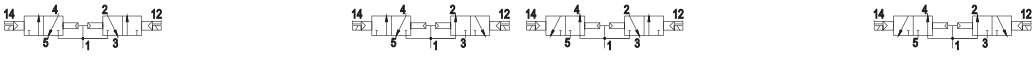

Operational characteristic		Example: if inlet pressure is set at 5bar then pilot pressure must be at least Pp=1,5+(0.2*5)=2,5bar					
Fluid	Flow rate at 6 bar with Δp=1 (Nl/min)	Max working pressure (bar)	Orifice size (mm)	Temperature °C	Minimum piloting pressure (bar)	Weight (gr.)	For dimension "A":
Filtered air, with or without lubrication	450	10	7	-5 ÷ +50	≥1,5+(0,2xP.alim.)	190	see ordering code

Modular base

Ordering code	
2430.Ⓥ	
	VERSION
	01=Modular base
Ⓥ	06=Supply and exhaust closed
	07=Supply closed
	08=Exhaust closed

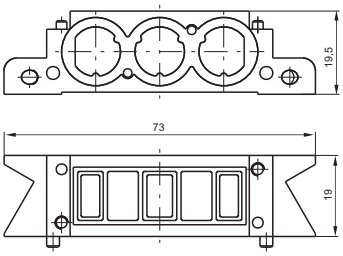

Blanck base

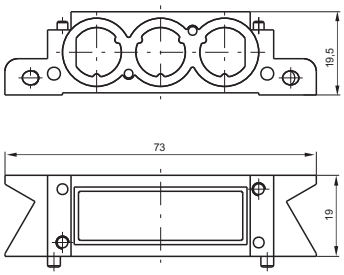

Ordering code
2430.05

Weight gr. 85

Right inlet base

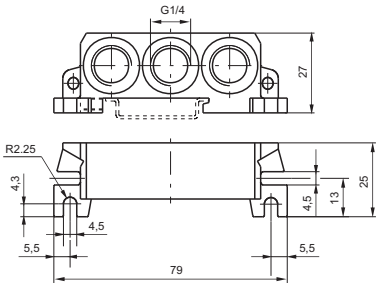

Ordering code
2430.02

Weight gr. 120

Left inlet base

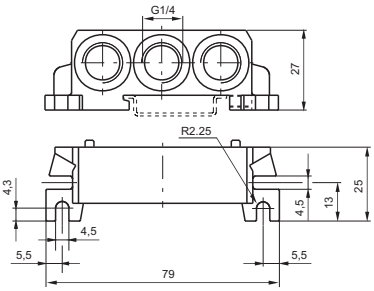

Ordering code
2430.03

Weight gr. 125

Intermediate air intake

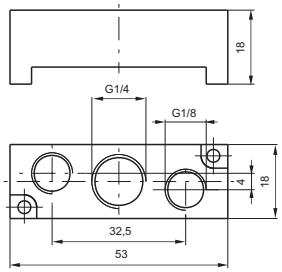

Ordering code
2430.10

Weight gr. 30
to be assembled of a valve

Closing plate

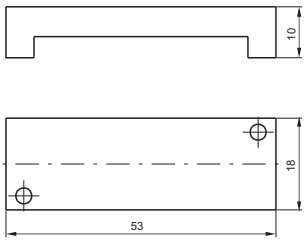

Ordering code
2430.00

Weight gr. 20

Diaphragm plug

Ordering code
2430.17

Weight gr. 5

2

Pneumatic - Spring

Ordering code

2445.52.00.19

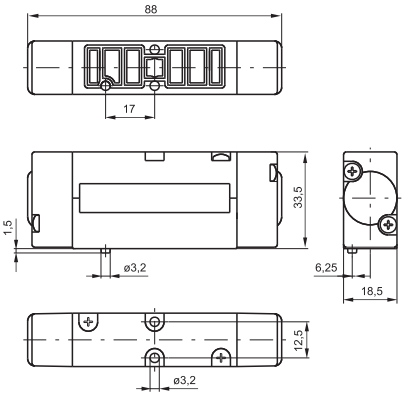

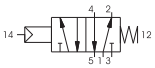

Operational characteristic

Fluid	Flow rate at 6 bar with Δp=1 (Nl/min)	Max working pressure (bar)	Orifice size (mm)	Minimum piloting pressure (bar)	Weight (gr.)	Temperature °C
Filtered air, with or without lubrication	550	10	5	2	155	-5 ÷ +50

Pneumatic - Differential / Differential external

Ordering code

2445.52.00.Ⓥ

Ⓥ	VERSION
	16=Pneum. - Diff./al
	17=Pneum. - Diff./al ext.

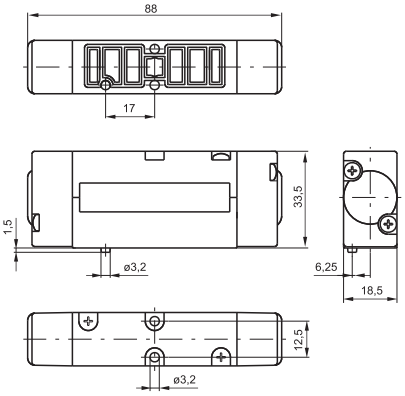

Operational characteristic

Fluid	Flow rate at 6 bar with Δp=1 (Nl/min)	Max working pressure (bar)	Orifice size (mm)	Minimum piloting pressure (bar)	Weight (gr.)	Temperature °C
Filtered air, with or without lubrication	550	10	5	2	155	-5 ÷ +50

Pneumatic - Pneumatic

Ordering code

2445.52.00.18

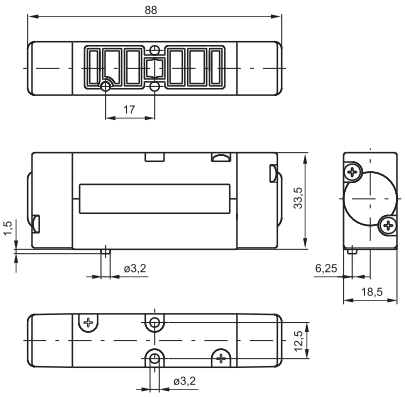

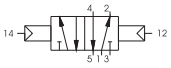

Operational characteristic

Fluid	Flow rate at 6 bar with Δp=1 (Nl/min)	Max working pressure (bar)	Orifice size (mm)	Minimum piloting pressure (bar)	Weight (gr.)	Temperature °C
Filtered air, with or without lubrication	500	10	5	1,5	155	-5 ÷ +50

Miniature solenoid - Spring / Differential

Ordering code	
244Ⓔ.52.00.Ⓥ.Ⓣ	
Ⓔ	TYPE ELECTROPILOT EXHAUST
	1=on base (only for self feeding valves)
	5=on pilot (for all version)
Ⓥ	VERSION
	39=Sv. - Spring
	29=Sv. ext. - Spring
	36=Sv. - Diff./al
	37=Sv. - Diff./al ext.
	26=Sv. ext. - Differ.
	27=Sv. ext. - Differ. ext.
Ⓣ	COIL VOLTAGE
	01=12V DC
	02=24V DC
	05=24V AC
	06=110V AC
	07=230V AC
	08=24V DC 1 Watt
	09=24V DC Earth Faston
	11=12V DC Downward
	12=24V DC Downward
	15=24V AC Downward
	16=110V AC Downward
	17= 230V AC Downward
	18=24V DC 1 Watt Downward
	19=24V DC Earth Faston Downward

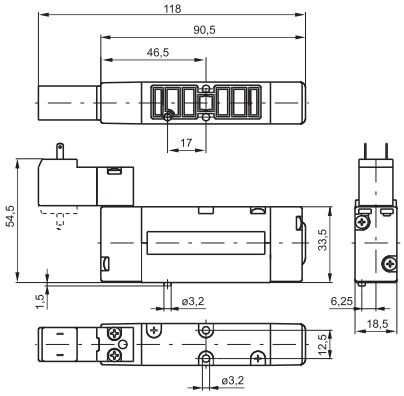

Operational characteristic

Fluid	Flow rate at 6 bar with Δp=1 (Nl/min)	Max working pressure (bar)	Orifice size (mm)	Minimum piloting pressure (bar)	Weight (gr.)	Temperature °C
Filtered air, with or without lubrication	550	10	5	2	190	-5 ÷ +50

Miniature solenoid - Miniature solenoid

Ordering code	
244Ⓔ.52.00.Ⓥ.Ⓣ	
Ⓔ	TYPE ELECTROPILOT EXHAUST
	1=on base (only for self feeding valves)
	5=on pilot (for all version)
Ⓥ	VERSION
	35=Sv. - Sv.
	24=Sv. ext. - Sv. ext.
Ⓣ	COIL VOLTAGE
	01=12V DC
	02=24V DC
	05=24V AC
	06=110V AC
	07=230V AC
	08=24V DC 1 Watt
	09=24V DC Earth Faston
	11=12V DC Downward
	12=24V DC Downward
	15=24V AC Downward
	16=110V AC Downward
	17= 230V AC Downward
	18=24V DC 1 Watt Downward
	19=24V DC Earth Faston Downward

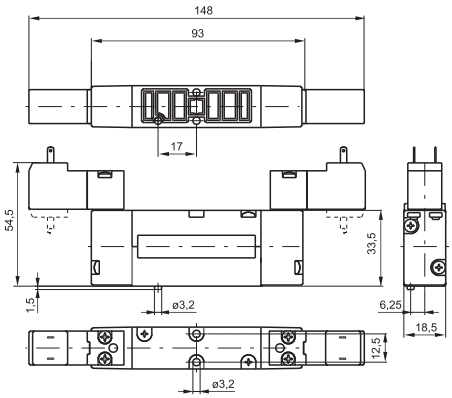

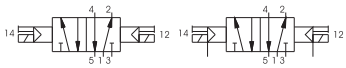

Operational characteristic

Fluid	Flow rate at 6 bar with Δp=1 (Nl/min)	Max working pressure (bar)	Orifice size (mm)	Minimum piloting pressure (bar)	Weight (gr.)	Temperature °C
Filtered air, with or without lubrication	550	10	5	1,5	225	-5 ÷ +50

2

Pneumatic - Pneumatic

Ordering code

244Ⓔ.53.Ⓕ.18

Ⓔ	TYPE ELECTROPILOT EXHAUST
	1=on base (only for self feeding valves)
	5=on pilot (for all version)
Ⓕ	FUNCTION
	31=Closed centres
	32=Open centres
	33=Pressured centres

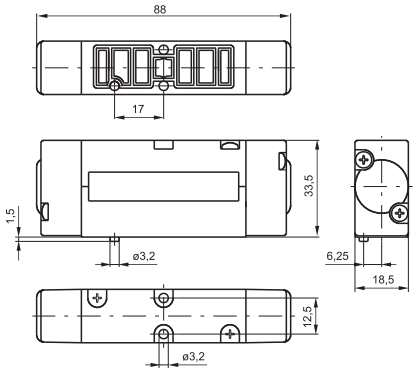

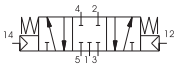

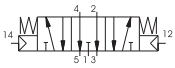

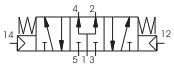

Operational characteristic

Fluid	Flow rate at 6 bar with Δp=1 (Nl/min)	Max working pressure (bar)	Orifice size (mm)	Minimum piloting pressure (bar)	Weight (gr.)	Temperature °C
Filtered air, with or without lubrication	550	10	5	3	165	-5 ÷ +50

Miniature solenoid - Miniature solenoid

Ordering code

244Ⓔ.53.Ⓕ.Ⓥ.Ⓣ

Ⓔ	TYPE ELECTROPILOT EXHAUST
	1=on base (only for self feeding valves)
	5=on pilot (for all version)
Ⓕ	FUNCTION
	31=Closed centres
	32=Open centres
	33=Pressured centres
Ⓥ	VERSION
	35=Sv. - Sv.
	24=Sv. ext. - Sv. ext.
Ⓣ	COIL VOLTAGE
	01=12V DC
	02=24V DC
	05=24V AC
	06=110V AC
	07=230V AC
	08=24V DC 1 Watt
	09=24V DC Earth Faston
	11=12V DC Downward
	12=24V DC Downward
	15=24V AC Downward
	16=110V AC Downward
	17= 230V AC Downward
	18=24V DC 1 Watt Downward
	19=24V DC Earth Faston Downward

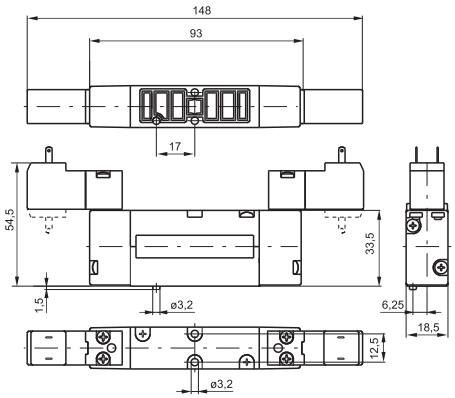

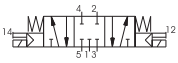

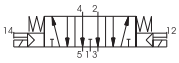

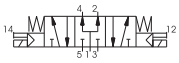

Operational characteristic

Fluid	Flow rate at 6 bar with Δp=1 (Nl/min)	Max working pressure (bar)	Orifice size (mm)	Minimum piloting pressure (bar)	Weight (gr.)	Temperature °C
Filtered air, with or without lubrication	550	10	5	3	235	-5 ÷ +50

Pneumatic - Pneumatic

Ordering code	
2445.62.Ⓕ.18	
Ⓕ	FUNCTION
	44=2 Coils 3/2 NC
	45=1 Coil 3/2 NC (14) + 1 Coil 3/2 NO (12)
	55=2 Coils 3/2 NO
	54=1 Coil 3/2 NO (14) + 1 Coil 3/2 NC (12)

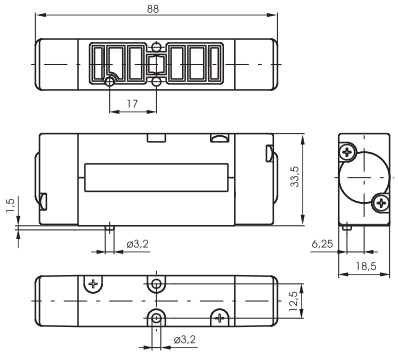

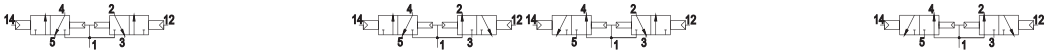

Operational characteristic		Example: if inlet pressure is set at 5bar then pilot pressure must be at least Pp=1,5+(0.2*5)=2,5bar				
Fluid	Flow rate at 6 bar with Δp=1 (Nl/min)	Max working pressure (bar)	Orifice size (mm)	Temperature °C	Minimum piloting pressure (bar)	Weight (gr.)
Filtered air, with or without lubrication	550	10	5	-5 ÷ +50	≥1,5+(0,2xP.alim.)	170

Miniature solenoid - Miniature solenoid

Ordering code	
2445.62.Ⓕ.35.Ⓣ	
Ⓕ	FUNCTION
	44=2 Coils 3/2 NC
	45=1 Coil 3/2 NC (14) + 1 Coil 3/2 NO (12)
	55=2 Coils 3/2 NO
	54=1 Coil 3/2 NO (14) + 1 Coil 3/2 NC (12)
Ⓣ	COIL VOLTAGE
	01=12V DC
	02=24V DC
	05=24V AC
	06=110V AC
	07=230V AC
	08=24V DC 1 Watt
	09=24V DC Earth Faston
	11=12V DC Downward
	12=24V DC Downward
	15=24V AC Downward
	16=110V AC Downward
	17= 230V AC Downward
	18=24V DC 1 Watt Downward
	19=24V DC Earth Faston Downward

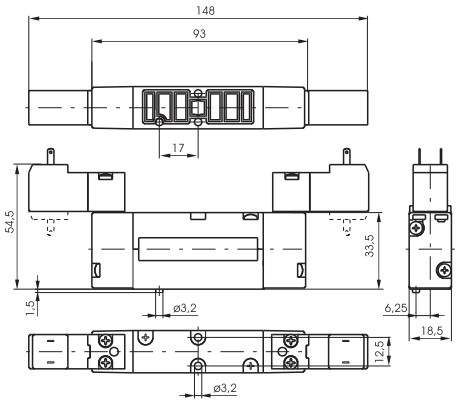

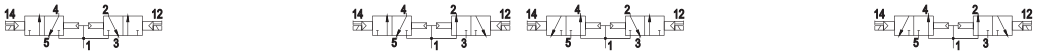

Operational characteristic		Example: if inlet pressure is set at 5bar then pilot pressure must be at least Pp=1,5+(0.2*5)=2,5bar				
Fluid	Flow rate at 6 bar with Δp=1 (Nl/min)	Max working pressure (bar)	Orifice size (mm)	Temperature °C	Minimum piloting pressure (bar)	Weight (gr.)
Filtered air, with or without lubrication	550	10	5	-5 ÷ +50	≥1,5+(0,2xP.alim.)	250

Modular base

Ordering code	
2440.Ⓥ	
Ⓥ	VERSION
	01 = standard base
	11 = Modular base for single separate inlet

Weight gr. 110

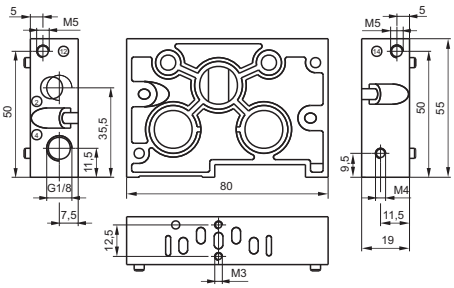

* Used to supply a single spool valve with an external pilot signal. Threaded ports 12 and 14 are connected to the valve via the base / valve interface, while the cross sectional drillings in the base are blanked off."

Right inlet base

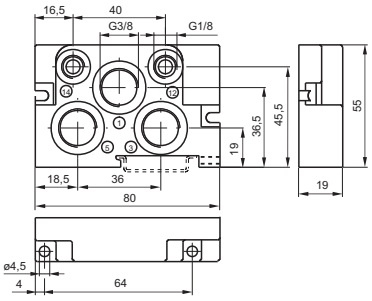

Ordering code
2440.02

Weight gr. 110

Left inlet base

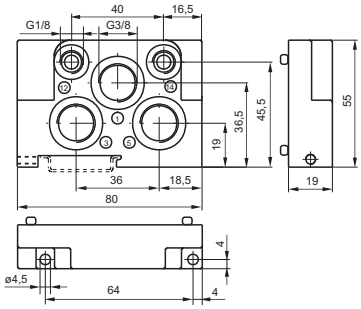

Ordering code
2440.03

Weight gr. 110

Intermediate air intake

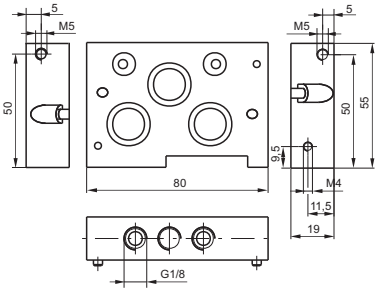

Ordering code
2440.10

Weight gr. 185

Closing plate

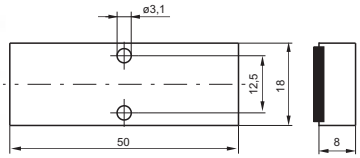

Ordering code
2440.00

Weight gr. 185

Diaphragm plug

Ordering code
2440.17

The integral electrical design for the series 2400 valve is extremely flexible, allowing the production of pre-wired solenoid valve manifolds, the configuration of which can be determined at the point of assembly. The 24 VDC, 12 VDC (equivalent PNP) and 24 VAC* modules are available with 2 or 4 positions. The system assembled is designed for an IP40 protection. IP65 is available on request.

* Attention : If the working tension is 24 VAC DO NOT using modules with protection diode

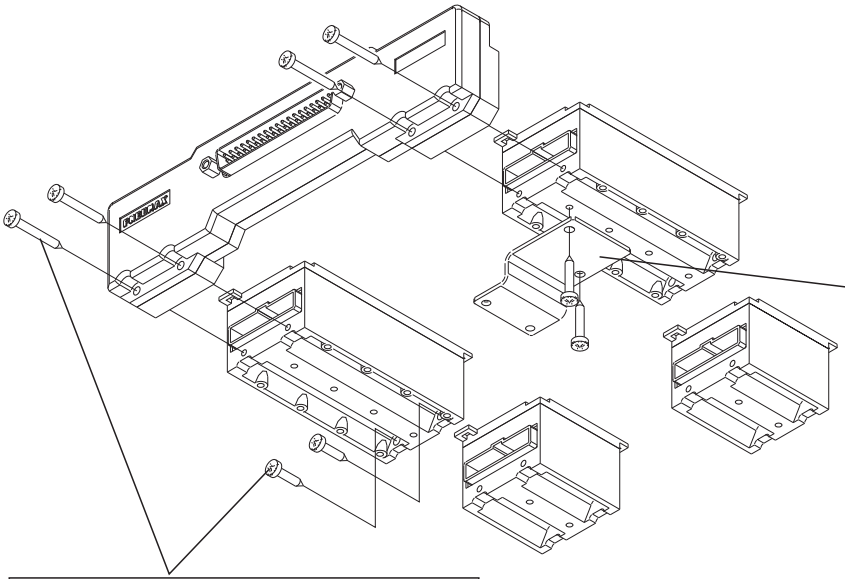

Support plates are supplied to mount the electrical connection elements to the manifold modules. Individual valves can still be removed from the manifold even after assembly is complete. One support plate is required per element.

The elements connect together using an upper coupling and lower fixing screw.

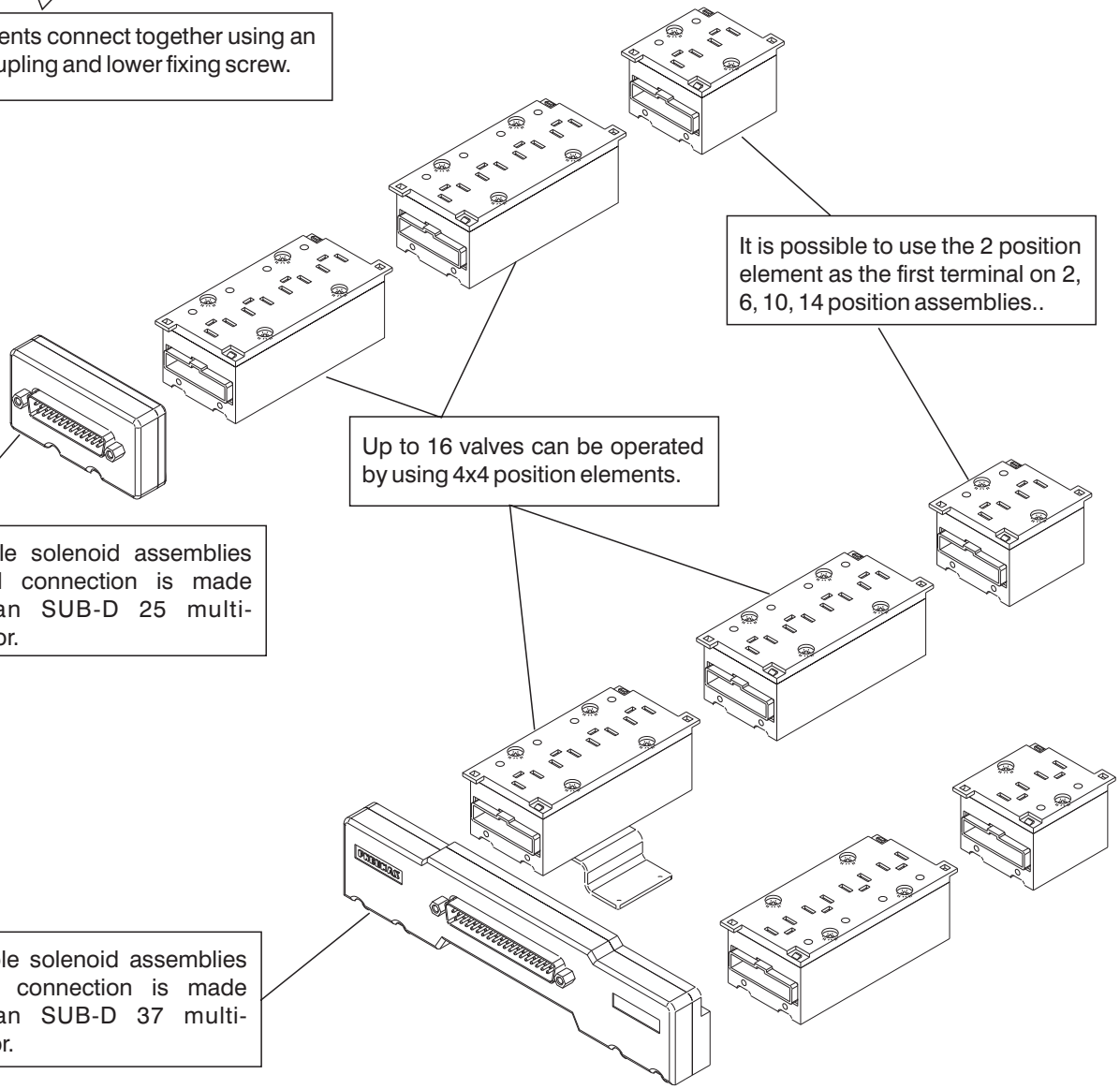

It is possible to use the 2 position element as the first terminal on 2, 6, 10, 14 position assemblies..

Up to 16 valves can be operated by using 4x4 position elements.

On single solenoid assemblies electrical connection is made using an SUB-D 25 multi-connector.

On double solenoid assemblies electrical connection is made usinfg an SUB-D 37 multi-connector.

2

4 positions module

Weight gr. 50
* only for VDC

Ordering code

2400.Ⓟ.Ⓣ

Ⓟ	PLACES
	04=4 Places
	02=2 Places
Ⓣ	TYPE
	00=Left IP40-PNP
	02=Left IP40-PNP with protection diode PNP*
	10=Left IP65-PNP
	12=Left IP65-PNP with protection diode*
	01=Right IP40-PNP
	03=Right IP40-PNP with protection diode*
	11=Right IP65-PNP
	13=Right IP65-PNP with protection diode*

2 positions module

Weight gr. 30
* only for VDC

37 contacts front connector IP65

Ordering code

2400.37.10

Weight gr. 120 - IP 65 protection grade is achieved using the IP65 Pneumax Cable

25 contacts front connector IP65

Ordering code

2400.25.10

Weight gr. 40 - IP 65 protection grade is achieved using the IP65 Pneumax Cable

Plug

Ordering code

2400.00

Weight gr. 5

Closing plate electrical positions

Ordering code

2400.15.00

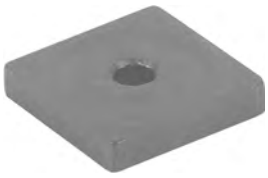

Weight gr. 2

VDMA support plate

Ordering code

2440.50

Weight gr. 20

FLAT support plate

Ordering code

2430.50

Weight gr. 20

4 positions box with 25 contacts connector

Ordering code

2400.04.25

Weight gr. 65

15mm male connector with 2 metres cable

Ordering code

2400.15.02

Weight gr. 98

In line cable complete with connector IP40

Ordering code	
2400.Ⓣ.Ⓛ.00	
Ⓣ	CONNECTOR TYPE
	25=25 contacts
	37=37 contacts
Ⓛ	CABLE LENGTH
	03=3 meters
	05=5 meters
	10=10 meters

Cable complete with connector, 25 Poles IP65

Ordering code	
2300.25.Ⓛ.Ⓒ	
Ⓛ	CABLE LENGTH
	03=3 meters
	05=5 meters
	10=10 meters
Ⓒ	CONNECTOR
	10=In line
	90=a 90°

Cable complete with connector, 37 Poles IP65

Ordering code	
2400.37.Ⓛ.Ⓒ	
Ⓛ	CABLE LENGTH
	03=3 meters
	05=5 meters
	10=10 meters
Ⓒ	CONNECTOR
	10=In line
	90=a 90°

2

SUB-D 25 CONTACTS CONNECTOR

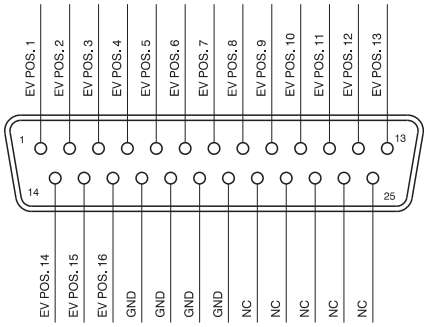

SUB-D 37 CONTACTS CONNECTOR

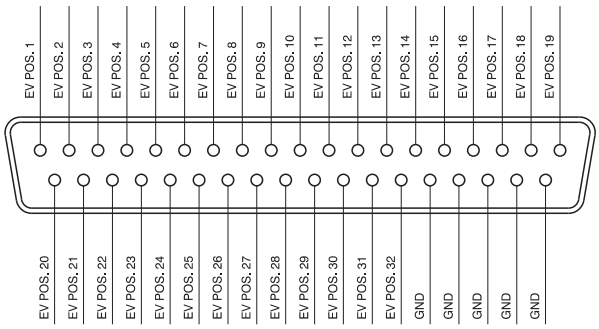

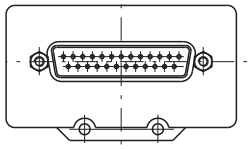

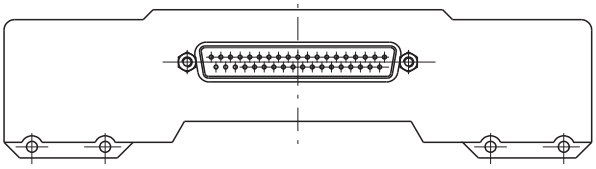

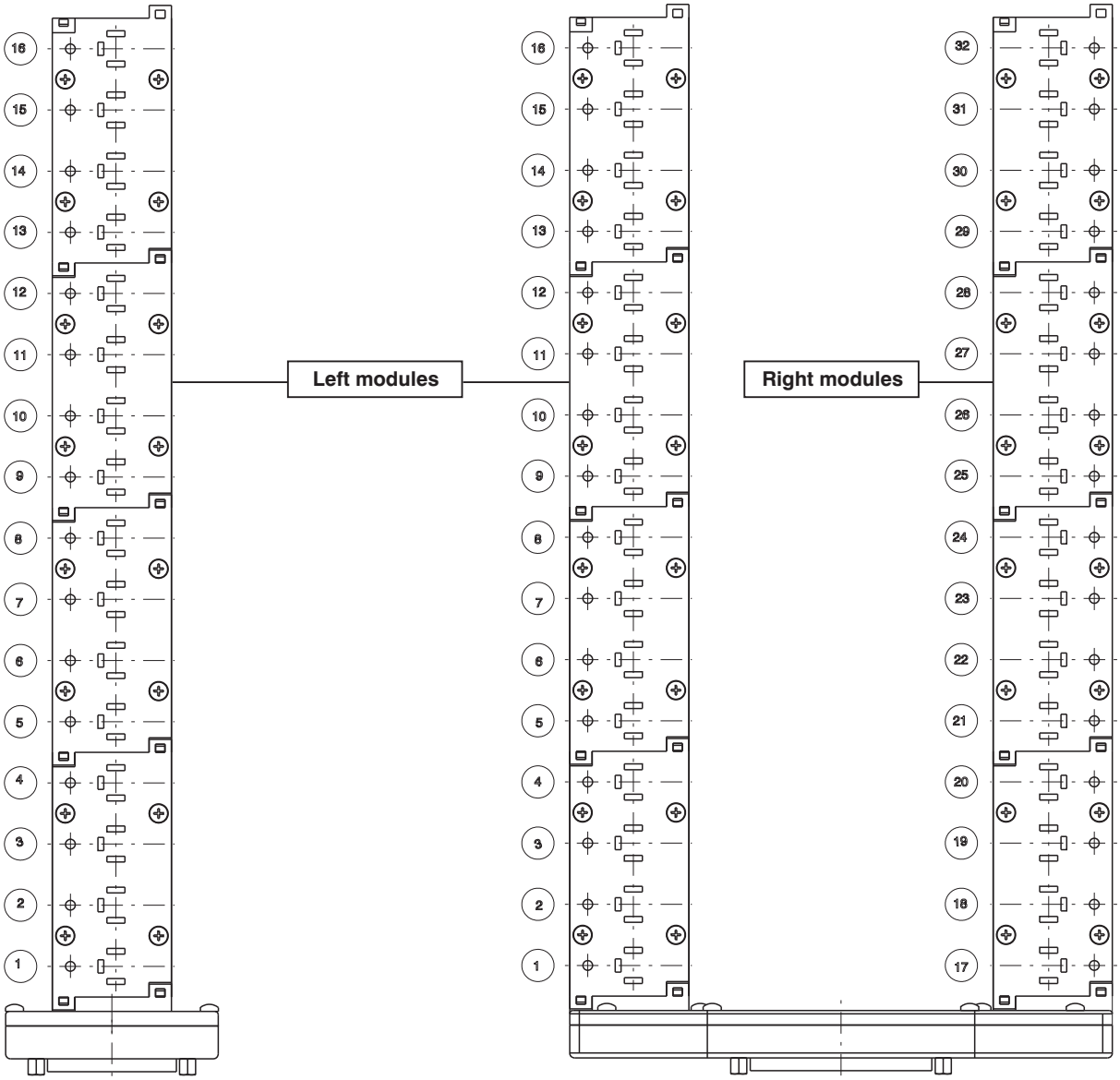

Pneumatic - Spring

Ordering code	
261Ⓐ.52.00.19	
Ⓐ	CONNECTIONS
	1=G3/8"
	5=G1/4"
	8=quick fitting tube Ø10

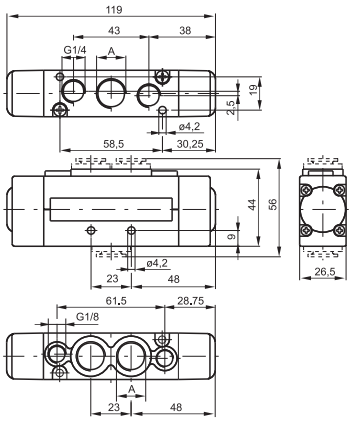

Weight gr. 235
Minimum piloting pressure 2 bar

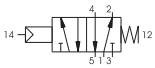

For dimension "A" see ordering code

Operational characteristic	Fluid	Max working pressure (bar)	Temperature °C	Flow rate at 6 bar with Δp=1 (Nl/min)	Orifice size (mm)	Working ports size	Pilot ports size
	Filtered and lubricated air or not	10 bar	-5 - +50	1500 Nl/min	mm 9	G1/4" - G3/8" tube Ø10	G1/8"

Pneumatic - Differential / Differential external

Ordering code	
261Ⓐ.52.00.Ⓥ	
Ⓐ	CONNECTIONS
	1=G3/8"
	5=G1/4"
	8=quick fitting tube Ø10
Ⓥ	VERSION
	16=Pneum. - Diff./al
	17=Pneum. - Diff./al ext.

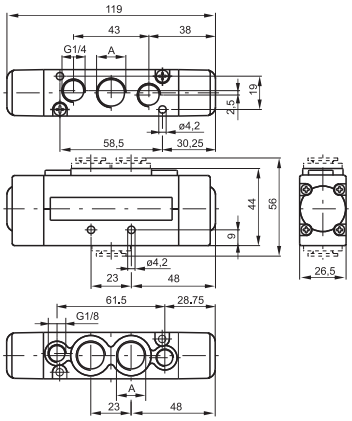

Weight gr. 235
Minimum piloting pressure 2 bar

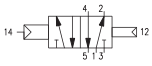

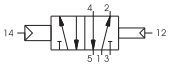

For dimension "A" see ordering code

Operational characteristic	Fluid	Max working pressure (bar)	Temperature °C	Flow rate at 6 bar with Δp=1 (Nl/min)	Orifice size (mm)	Working ports size	Pilot ports size
	Filtered and lubricated air or not	10 bar	-5 - +50	1500 Nl/min	mm 9	G1/4" - G3/8" tube Ø10	G1/8"

Pneumatic - Pneumatic

Ordering code	
261Ⓐ.52.00.18	
Ⓐ	CONNECTIONS
	1=G3/8"
	5=G1/4"
	8=quick fitting tube Ø10

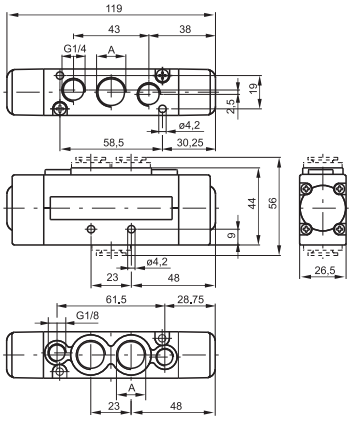

Weight gr. 235
Minimum piloting pressure 1,5 bar

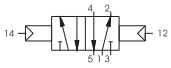

For dimension "A" see ordering code

Operational characteristic	Fluid	Max working pressure (bar)	Temperature °C	Flow rate at 6 bar with Δp=1 (Nl/min)	Orifice size (mm)	Working ports size	Pilot ports size
	Filtered and lubricated air or not	10 bar	-5 - +50	1500 Nl/min	mm 9	G1/4" - G3/8" tube Ø10	G1/8"

Miniature solenoid - Spring / Differential

Ordering code

261Ⓐ.52.00.Ⓥ.Ⓣ

Ⓐ	CONNECTIONS
	1=G3/8"
	5=G1/4"
	8=quick fitting tube Ø10
Ⓥ	VERSION
	39=Sv. - Spring
	29=Sv. ext. - Spring
	36=Sv. - Diff./al
	37=Sv. ext. - Diff./al ext.
	26=Sv. ext. - Diff./al
	27=Sv. ext. - Diff./al ext.
Ⓣ	COIL VOLTAGE
	01=12V DC
	02=24V DC
	05=24V AC
	06=110V AC
	07=230V AC
	08=24V DC 1 Watt
	09=24V DC Earth Faston
	11=12V DC Downward
	12=24V DC Downward
	15=24V AC Downward
	16=110V AC Downward
	17= 230V AC Downward
	18=24V DC 1 Watt Downward
	19=24V DC Earth Faston Downward

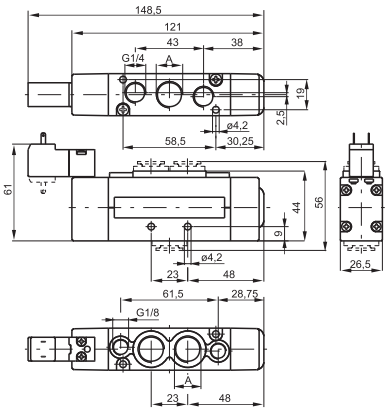

Weight gr. 275
Minimum working pressure 2 bar - For dimension "A" see ordering code

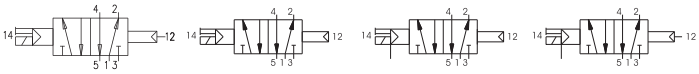

Operational characteristic	Fluid	Max working pressure (bar)	Temperature °C	Flow rate at 6 bar with Δp=1 (Nl/min)	Orifice size (mm)	Working ports size
	Filtered and lubricated air or not	10 bar	-5 - +50	1500 Nl/min	mm 9	G1/4" - G3/8" tube Ø10

Miniature solenoid - Miniature solenoid

Ordering code

261Ⓐ.52.00.Ⓥ.Ⓣ

Ⓐ	CONNECTIONS
	1=G3/8"
	5=G1/4"
	8=quick fitting tube Ø10
Ⓥ	VERSION
	35=Sv. - Sv.
	24=Sv. ext. - Sv. ext.
Ⓣ	COIL VOLTAGE
	01=12V DC
	02=24V DC
	05=24V AC
	06=110V AC
	07=230V AC
	08=24V DC 1 Watt
	09=24V DC Earth Faston
	11=12V DC Downward
	12=24V DC Downward
	15=24V AC Downward
	16=110V AC Downward
	17= 230V AC Downward
	18=24V DC 1 Watt Downward
	19=24V DC Earth Faston Downward

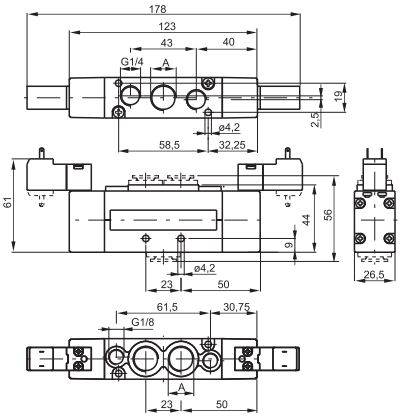

Weight gr. 295
Minimum working pressure 1,5 bar - For dimension "A" see ordering code

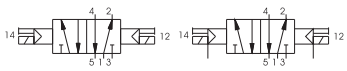

Operational characteristic	Fluid	Max working pressure (bar)	Temperature °C	Flow rate at 6 bar with Δp=1 (Nl/min)	Orifice size (mm)	Working ports size
	Filtered and lubricated air or not	10 bar	-5 - +50	1500 Nl/min	mm 9	G1/4" - G3/8" tube Ø10

Pneumatic - Pneumatic

Ordering code

261Ⓐ.53.Ⓕ.18

Ⓐ	CONNECTIONS
	1=G3/8"
	5=G1/4"
	8=quick fitting tube Ø10
Ⓕ	FUNCTION
	31=Closed centres
	32=Open centres
	33=Pressured centres

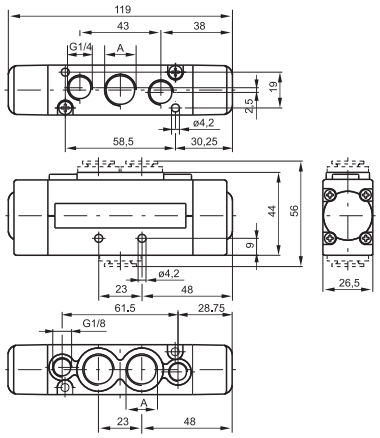

Weight gr. 245 - Minimum working pressure 3 bar

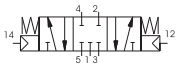

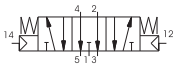

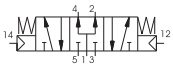

For dimension "A" see ordering code

Operational characteristic	Fluid	Max working pressure (bar)	Temperature °C	Flow rate at 6 bar with Δp=1 (Nl/min)	Orifice size (mm)	Working ports size	Pilot ports size
	Filtered and lubricated air or not	10 bar	-5 - +50	1350 Nl/min	mm 9	G1/8"-G1/4" tube Ø6-tube Ø8	M5

Miniature solenoid - Miniature solenoid

Ordering code

261Ⓐ.53.Ⓕ.Ⓥ.Ⓣ

Ⓐ	CONNECTIONS
	1=G3/8"
	5=G1/4"
	8=quick fitting tube Ø10
Ⓕ	FUNCTION
	31=Closed centres
	32=Open centres
	33=Pressured centres
Ⓥ	VERSION
	24=Sv. ext. - Sv. ext.
	35=Sv. - Sv.
Ⓣ	COIL VOLTAGE
	01=12V DC
	02=24V DC
	05=24V AC
	06=110V AC
	07=230V AC
	08=24V DC 1 Watt
	09=24V DC Earth Faston
	11=12V DC Downward
	12=24V DC Downward
	15=24V AC Downward
	16=110V AC Downward
	17= 230V AC Downward
	18=24V DC 1 Watt Downward
	19=24V DC Earth Faston Downward

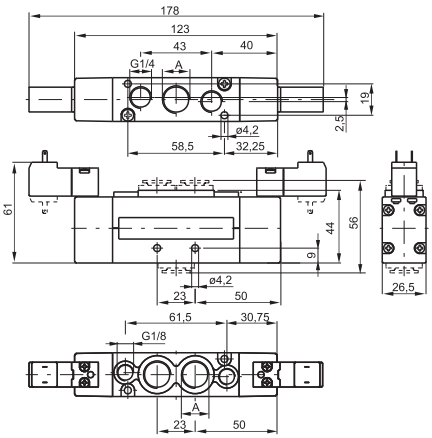

Weight gr. 245 - Minimum working pressure 3 bar

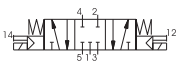

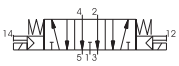

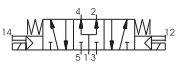

For dimension "A" see ordering code

Operational characteristic	Fluid	Max working pressure (bar)	Temperature °C	Flow rate at 6 bar with Δp=1 (Nl/min)	Orifice size (mm)	Working ports size
	Filtered and lubricated air or not	10 bar	-5 - +50	1350 Nl/min	mm 9	G1/8"-G1/4" tube Ø6-tube Ø8

Pneumatic - Spring

Ordering code

263Ⓐ.52.00.19

Ⓐ	CONNECTIONS
	1=G3/8"
	5=G1/4"
	8=quick fitting tube Ø10

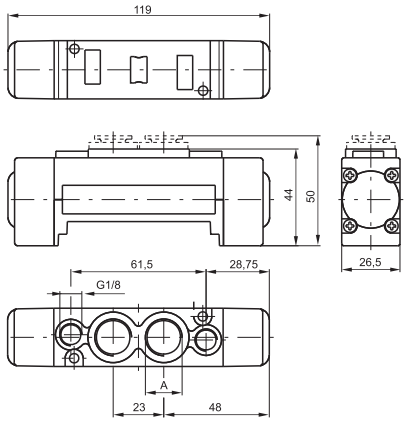

Weight gr. 185
Minimum piloting pressure 2 bar

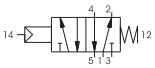

For dimension "A" see ordering code

Operational characteristic	Fluid	Max working pressure (bar)	Temperature °C	Flow rate at 6 bar with Δp=1 (Nl/min)	Orifice size (mm)	Working ports size	Pilot ports size
	Filtered and lubricated air or not	10 bar	-5 - +50	1500 Nl/min	mm 9	G1/4" - G3/8" tube Ø10	M5

Pneumatic - Differential / Differential external

Ordering code

263Ⓐ.52.00.Ⓥ

Ⓐ	CONNECTIONS
	1=G3/8"
	5=G1/4"
	8=quick fitting tube Ø10
Ⓥ	VERSION
	16=Pneum. - Diff./al
	17=Pneum. - Diff./al ext.

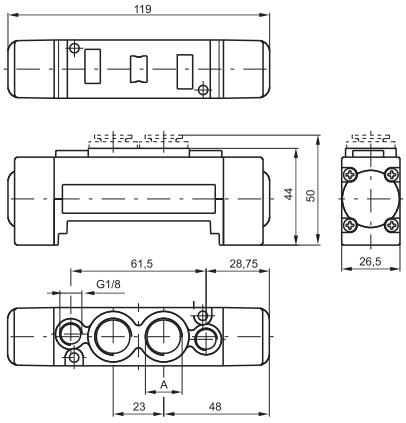

Weight gr. 185
Minimum piloting pressure 2 bar

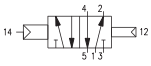

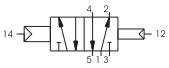

For dimension "A" see ordering code

Operational characteristic	Fluid	Max working pressure (bar)	Temperature °C	Flow rate at 6 bar with Δp=1 (Nl/min)	Orifice size (mm)	Working ports size	Pilot ports size
	Filtered and lubricated air or not	10 bar	-5 - +50	1500 Nl/min	mm 9	G1/4" - G3/8" tube Ø10	M5

Pneumatic - Pneumatic

Ordering code

263Ⓐ.52.00.18

Ⓐ	CONNECTIONS
	1=G3/8"
	5=G1/4"
	8=quick fitting tube Ø10

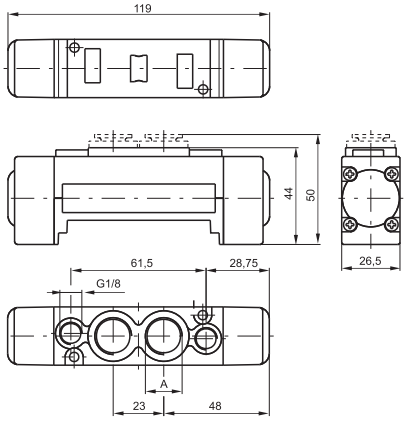

Weight gr. 185
Minimum piloting pressure 1,5 bar

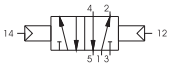

For dimension "A" see ordering code

Operational characteristic	Fluid	Max working pressure (bar)	Temperature °C	Flow rate at 6 bar with Δp=1 (Nl/min)	Orifice size (mm)	Working ports size	Pilot ports size
	Filtered and lubricated air or not	10 bar	-5 - +50	1500 Nl/min	mm 9	G1/4" - G3/8" tube Ø10	M5

Miniature solenoid - Spring / Differential

Ordering code

263Ⓐ.52.00.Ⓥ.Ⓣ

Ⓐ	CONNECTIONS
	1=G3/8"
	5=G1/4"
	8=quick fitting tube Ø10
Ⓥ	VERSION
	39=Sv. - Spring
	29=Sv. ext. - Spring
	36=Sv. - Diff./al
	37=Sv. ext. - Diff./al ext.
	26=Sv. ext. - Diff./al
	27=Sv. ext. - Diff./al ext.
Ⓣ	COIL VOLTAGE
	01=12V DC
	02=24V DC
	05=24V AC
	06=110V AC
	07=230V AC
	08=24V DC 1 Watt
	09=24V DC Earth Faston
	11=12V DC Downward
	12=24V DC Downward
	15=24V AC Downward
	16=110V AC Downward
	17= 230V AC Downward
	18=24V DC 1 Watt Downward
	19=24V DC Earth Faston Downward

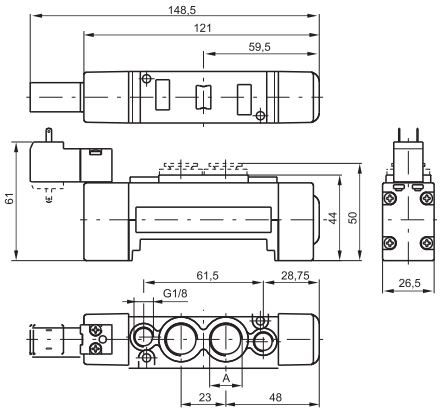

Weight gr. 220
Minimum working pressure 2 bar - For dimension "A" see ordering code

Operational characteristic	Fluid	Max working pressure (bar)	Temperature °C	Flow rate at 6 bar with Δp=1 (Nl/min)	Orifice size (mm)	Working ports size
	Filtered and lubricated air or not	10 bar	-5 - +50	1500 Nl/min	mm 9	G1/4" - G3/8" tube Ø10

Miniature solenoid - Miniature solenoid

Ordering code

263Ⓐ.52.00.Ⓥ.Ⓣ

Ⓐ	CONNECTIONS
	1=G3/8"
	5=G1/4"
	8=quick fitting tube Ø10
Ⓥ	VERSION
	35=Sv. - Sv.
	24=Sv. ext. - Sv. ext.
Ⓣ	COIL VOLTAGE
	01=12V DC
	02=24V DC
	05=24V AC
	06=110V AC
	07=230V AC
	08=24V DC 1 Watt
	09=24V DC Earth Faston
	11=12V DC Downward
	12=24V DC Downward
	15=24V AC Downward
	16=110V AC Downward
	17= 230V AC Downward
	18=24V DC 1 Watt Downward
	19=24V DC Earth Faston Downward

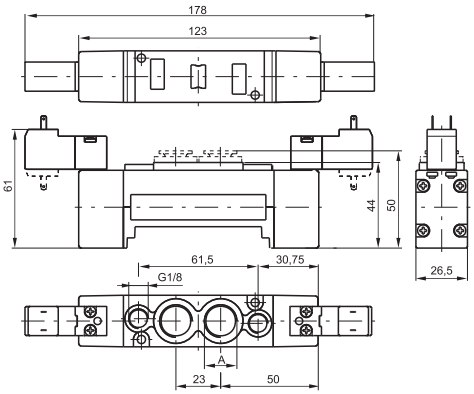

Weight gr. 250
Minimum working pressure 1,5 bar - For dimension "A" see ordering code

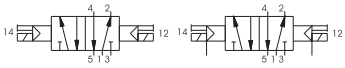

Operational characteristic	Fluid	Max working pressure (bar)	Temperature °C	Flow rate at 6 bar with Δp=1 (Nl/min)	Orifice size (mm)	Working ports size
	Filtered and lubricated air or not	10 bar	-5 - +50	1500 Nl/min	mm 9	G1/4" - G3/8" tube Ø10

2

Pneumatic - Pneumatic

Ordering code

263Ⓐ.53.Ⓕ.18

Ⓐ	CONNECTIONS
	1=G3/8"
	5=G1/4"
	8=quick fitting tube Ø10
Ⓕ	FUNCTION
	31=Closed centres
	32=Open centres
	33=Pressured centres

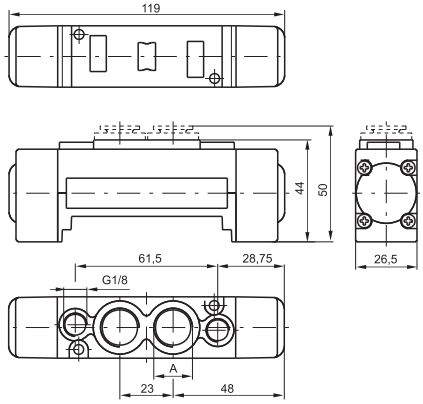

Weight gr. 195 - Minimum working pressure 3 bar

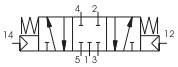

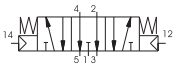

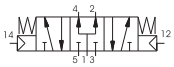

For dimension "A" see ordering code

Operational characteristic	Fluid	Max working pressure (bar)	Temperature °C	Flow rate at 6 bar with Δp=1 (Nl/min)	Orifice size (mm)	Working ports size	Pilot ports size
	Filtered and lubricated air or not	10 bar	-5 - +50	1350 Nl/min	mm 9	G1/8"-G1/4" tube Ø6-tube Ø8	M5

Miniature solenoid - Miniature solenoid

Ordering code

263Ⓐ.53.Ⓕ.Ⓥ.Ⓣ

Ⓐ	CONNECTIONS
	1=G3/8"
	5=G1/4"
	8=quick fitting tube Ø10
Ⓕ	FUNCTION
	31=Closed centres
	32=Open centres
	33=Pressured centres
Ⓥ	VERSION
	24=Sv. ext. - Sv. ext.
	35=Sv. - Sv.
Ⓣ	COIL VOLTAGE
	01=12V DC
	02=24V DC
	05=24V AC
	06=110V AC
	07=230V AC
	08=24V DC 1 Watt
	09=24V DC Earth Faston
	11=12V DC Downward
	12=24V DC Downward
	15=24V AC Downward
	16=110V AC Downward
	17= 230V AC Downward
	18=24V DC 1 Watt Downward
	19=24V DC Earth Faston Downward

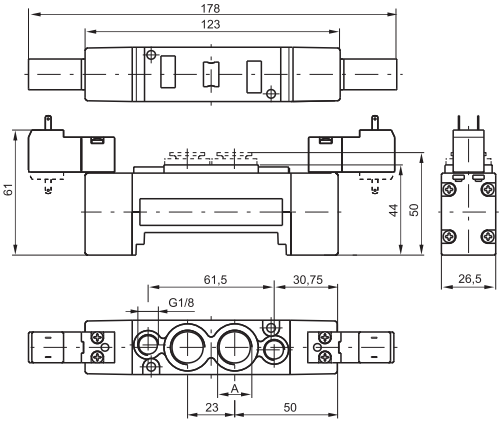

Weight gr. 270 - Minimum working pressure 3 bar

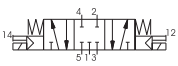

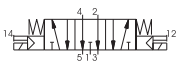

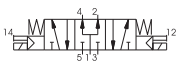

For dimension "A" see ordering code

Operational characteristic	Fluid	Max working pressure (bar)	Temperature °C	Flow rate at 6 bar with Δp=1 (Nl/min)	Orifice size (mm)	Working ports size
	Filtered and lubricated air or not	10 bar	-5 - +50	1350 Nl/min	mm 9	G1/8"-G1/4" tube Ø6-tube Ø8

Modular base

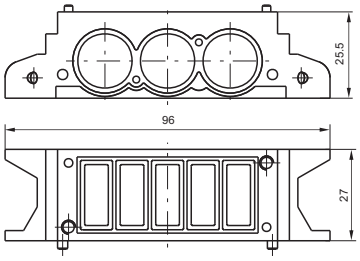

Ordering code

2630.01

Weight gr. 80

Right inlet base

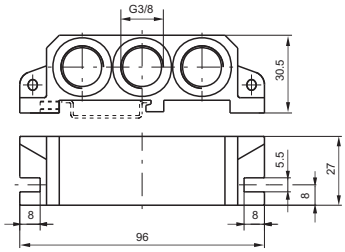

Ordering code

2630.02

Weight gr. 80

Left inlet base

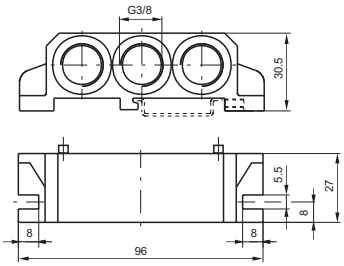

Ordering code

2630.03

Weight gr. 100

Intermediate air intake

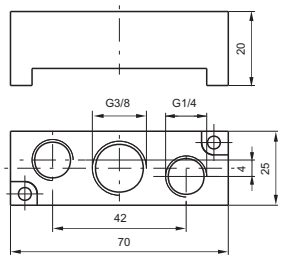

Ordering code

2630.10

Weight gr. 60
to be assembled of a valve

Closing plate

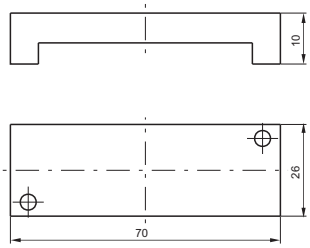

Ordering code

2630.00

Weight gr. 20

Diaphragm plug

Ordering code

2630.17

Weight gr. 5

2

Pneumatic - Spring

Ordering code

2645.52.00.19

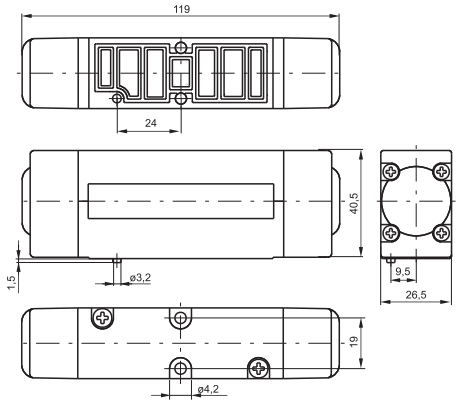

Weight gr. 235
Minimum piloting pressure 2 bar

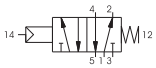

Operational characteristic	Fluid	Max working pressure (bar)	Temperature °C	Flow rate at 6 bar with Δp=1 (Nl/min)	Orifice size (mm)
	Filtered and lubricated air or not	10 bar	-5 - +50	1100 Nl/min	mm 7,5

Pneumatic - Differential / Differential external

Ordering code

2645.52.00.Ⓥ

Ⓥ	VERSION
	16=Pneumatic - Differential
	17=Pneumatic - Differential external

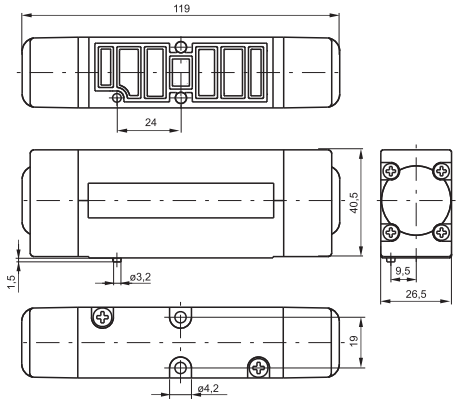

Weight gr. 235
Minimum piloting pressure 2 bar

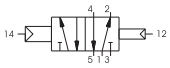

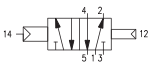

Operational characteristic	Fluid	Max working pressure (bar)	Temperature °C	Flow rate at 6 bar with Δp=1 (Nl/min)	Orifice size (mm)
	Filtered and lubricated air or not	10 bar	-5 - +50	1100 Nl/min	mm 7,5

Pneumatic - Pneumatic

Ordering code

2645.52.00.18

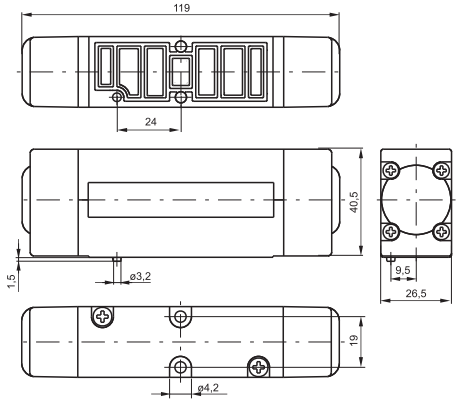

Weight gr. 255
Minimum piloting pressure 1,5 bar

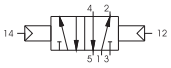

Operational characteristic	Fluid	Max working pressure (bar)	Temperature °C	Flow rate at 6 bar with Δp=1 (Nl/min)	Orifice size (mm)
	Filtered and lubricated air or not	10 bar	-5 - +50	1100 Nl/min	mm 7,5

Miniature solenoid - Spring / Differential

Ordering code	
264Ⓔ.52.00.Ⓥ.Ⓣ	
Ⓔ	TYPE ELECTROPILOT EXHAUST
	1=on base (only for self feeding valves)
	5=on pilot (for all version)
Ⓥ	VERSION
	39=Sv. - Spring
	29=Sv. ext. - Spring
	36=Sv. - Diff./al
	37=Sv. ext. - Diff./al ext.
	26=Sv. ext. - Diff./al
	27=Sv. ext. - Differ. ext.
Ⓣ	COIL VOLTAGE
	01=12V DC
	02=24V DC
	05=24V AC
	06=110V AC
	07=230V AC
	08=24V DC 1 Watt
	09=24V DC Earth Faston
	11=12V DC Downward
	12=24V DC Downward
	15=24V AC Downward
	16=110V AC Downward
	17= 230V AC Downward
	18=24V DC 1 Watt Downward
	19=24V DC Earth Faston Downward

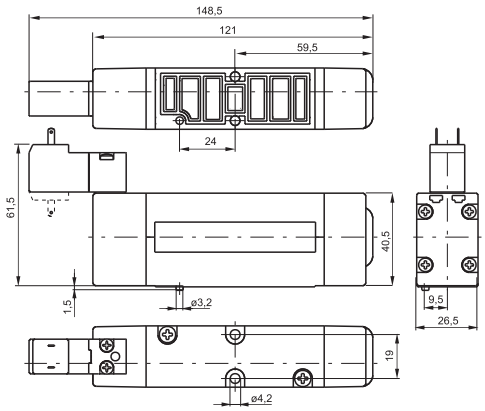

Miniature solenoid - Spring / Differenzial: Weight gr. 270 - Minimum working pressure 2 bar

Operational characteristic	Fluid	Max working pressure (bar)	Temperature °C	Flow rate at 6 bar with Δp=1 (Nl/min)	Orifice size (mm)
	Filtered and lubricated air or not	10 bar	-5 - +50	1100 Nl/min	mm 7,5

Miniature solenoid - Miniature solenoid

Ordering code	
264Ⓔ.52.00.Ⓥ.Ⓣ	
Ⓔ	TYPE ELECTROPILOT EXHAUST
	1=on base (only for self feeding valves)
	5=on pilot (for all version)
Ⓥ	VERSION
	35=Sv. - Sv.
	24=Sv. ext. - Sv. ext.
Ⓣ	COIL VOLTAGE
	01=12V DC
	02=24V DC
	05=24V AC
	06=110V AC
	07=230V AC
	08=24V DC 1 Watt
	09=24V DC Earth Faston
	11=12V DC Downward
	12=24V DC Downward
	15=24V AC Downward
	16=110V AC Downward
	17= 230V AC Downward
	18=24V DC 1 Watt Downward
	19=24V DC Earth Faston Downward

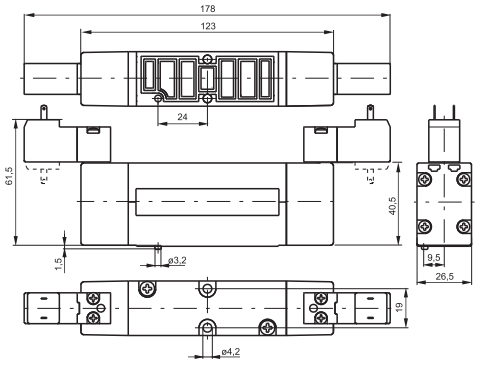

Miniature solenoid - Miniature solenoid: Weight gr. 305 - Minimum working pressure 1,5 bar

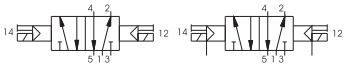

Operational characteristic	Fluid	Max working pressure (bar)	Temperature °C	Flow rate at 6 bar with Δp=1 (Nl/min)	Orifice size (mm)
	Filtered and lubricated air or not	10 bar	-5 - +50	1100 Nl/min	mm 7,5

Pneumatic - Pneumatic

Ordering code

264Ⓔ.53.Ⓕ.18

Ⓔ	TYPE ELECTROPILOT EXHAUST
	1=on base (only for self feeding valves)
	5=on pilot (for all version)
Ⓕ	FUNCTION
	31=Closed centres
	32=Open centres
	33=Pressured centres

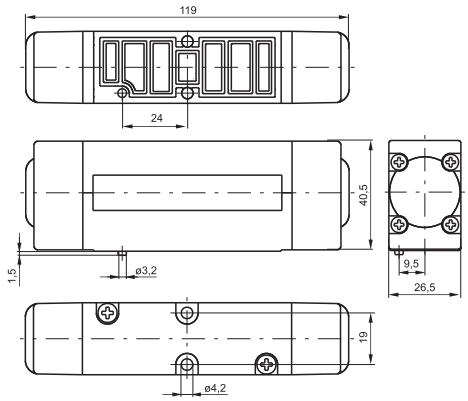

Weight gr. 245 - Minimum working pressure 3 bar

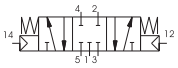

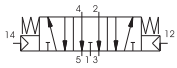

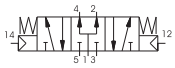

Operational characteristic	Fluid	Max working pressure (bar)	Temperature °C	Flow rate at 6 bar with Δp=1 (Nl/min)	Orifice size (mm)
	Filtered and lubricated air or not	10 bar	-5 - +50	1000 Nl/min	mm 7,5

Miniature solenoid - Miniature solenoid

Ordering code

264Ⓔ.53.Ⓕ.Ⓥ.Ⓣ

Ⓔ	TYPE ELECTROPILOT EXHAUST
	1=on base (only for self feeding valves)
	5=on pilot (for all version)
Ⓕ	FUNCTION
	31=Closed centres
	32=Open centres
	33=Pressured centres
Ⓥ	VERSION
	24=Sv. ext. - Sv. ext.
	35=Sv. - Sv.
Ⓣ	COIL VOLTAGE
	01=12V DC
	02=24V DC
	05=24V AC
	06=110V AC
	07=230V AC
	08=24V DC 1 Watt
	09=24V DC Earth Faston
	11=12V DC Downward
	12=24V DC Downward
	15=24V AC Downward
	16=110V AC Downward
	17= 230V AC Downward
	18=24V DC 1 Watt Downward
	19=24V DC Earth Faston Downward

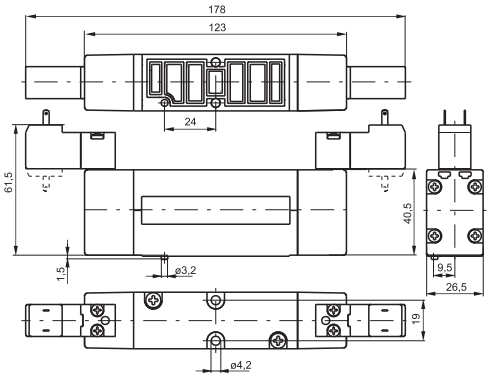

Weight gr. 315 - Minimum working pressure 3 bar

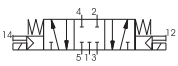

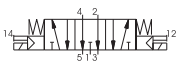

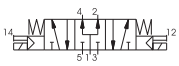

Operational characteristic	Fluid	Max working pressure (bar)	Temperature °C	Flow rate at 6 bar with Δp=1 (Nl/min)	Orifice size (mm)
	Filtered and lubricated air or not	10 bar	-5 - +50	1000 Nl/min	mm 5

Modular base

Ordering code	
2640.Ⓥ	
Ⓥ	VERSION
	01 = standard base
	11 = for single separate inlet

Weight gr. 220

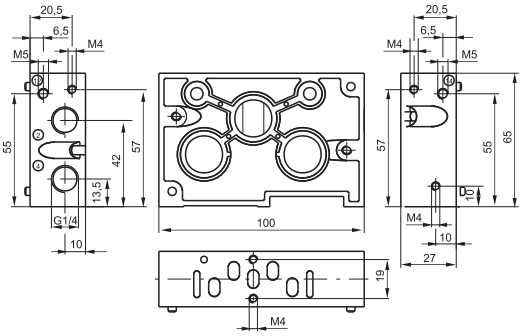

Right inlet base

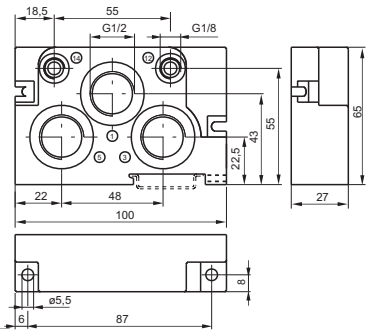

Ordering code
2640.02

Weight gr. 200

Left inlet base

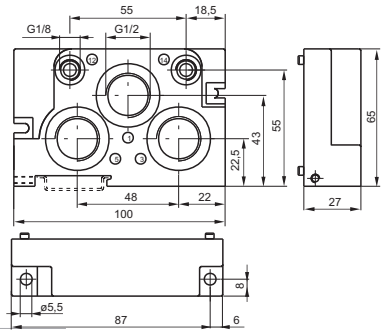

Ordering code
2640.03

Weight gr. 200

Intermediate air intake

Ordering code
2640.10

Weight gr. 380

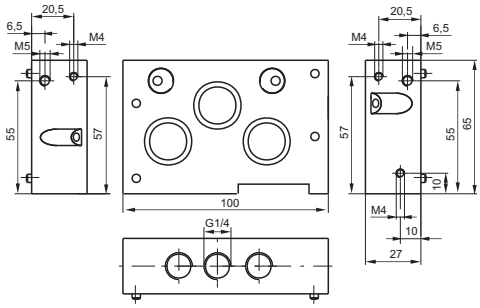

Closing plate

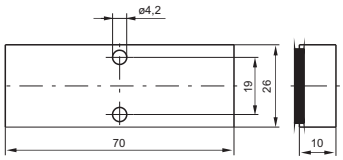

Ordering code
2640.00

Weight gr. 50

Diaphragm plug

Ordering code
2640.17

Weight gr. 10

General

The new 2700 Series of Solenoid operated valves conform to ISO 15407, a standard for both pneumatic and electrical layout.

This series of valves have a 27mm valve body width and a nominal flow rate of 1000 Nl/Min.

The solenoid valves are mounted upon a modular sub-base with G1/4” pneumatic connections and built in electrical connection.
Another feature of the 2700 series is that it can be equipped with the serial bus modules currently being used with our Optyma-T valve series, thus offering an extremely flexible product that can be integrated with standard communication protocols (CAN-Open®, Profibus, Device-Net, Ethernet IP, Profinet and EtherCAT®).
In addition to the serial bus modules, the valves manifolds can also be used with either a 25 or 37 pin SUB-D connectors offering control of up to a maximum of 32 electrical signals.

"Shifting time of pneumatic directional control valves or moving parts, logic devices were measured in accordance to ISO 12238:2001, Pneumatic fluid power - Directional control valves - Measurement of shifting time"

Main characteristics

Integrated and optimized electrical connection system.
IP65 protection degree.
Only one 26mm size.
Monostable and bistable solenoid valves with the same size dimensions.
G1/4" quick coupling connections.
Easy and fast manifold assembling.

Construction characteristics	
Body	Aluminium
Operators	Technopolymer
Spools	Aluminium
Seals	HNBR 75-80 Shore A
Piston seals	NBR
Springs	AISI 302 stainless steel
Pistons	Technopolymer

Functions
EV 5/2 MONOSTABLE SOLENOID-SPRING
EV 5/2 MONOSTABLE SOLENOID-DIFFERENTIAL
EV 5/2 BISTABLE SOLENOID-SOLENOID
EV 5/3 CC SOLENOID-SOLENOID
EV 2x3/2 NC-NC (= 5/3 CO) SOLENOID-SOLENOID
EV 2x3/2 NO-NO (= 5/3 CP) SOLENOID-SOLENOID
EV 2x3/2 NC-NO SOLENOID-SOLENOID

Technical characteristics	
Voltage	24 VDC ±10% PNP
Power Consumption	1 Watt - 2,3 Watt
Valve working pressure [1]	from vacuum to 10 bar max.
Operating temperature	-5°C +50°C
Life (standard operating conditions)	50.000.000
Fluid	Filtered air, with or without lubrication (if lubricated air, the lubrication must be continuous)

Solenoid-Spring

Ordering code	
2741.52.00.Ⓟ.Ⓥ	
Ⓟ	PILOTING
	39=Self feeding
	29=External feeding
Ⓥ	VOLTAGE
	01=12V DC
	02=24V DC
	08=24V DC 1W

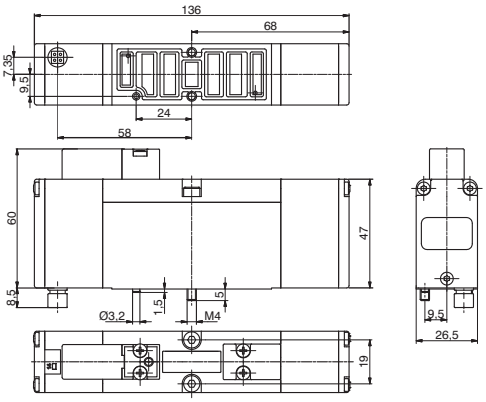

SHORT FUNCTION CODE (Self feeding) "AA"
SHORT FUNCTION CODE (External feeding) "AE"

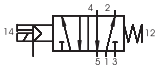

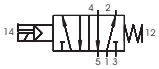

Note:
The "Activations time" values, are valid only for the 2,3W versions "Shifting time of pneumatic directional control valves or moving parts, logic devices were measured in accordance to ISO 12238:2001, Pneumatic fluid power - Directional control valves - Measurement of shifting time."

Operating Characteristics

Fluid	Flow rate at 6 bar with Δp=1(Nl/min)	Responce time (ISO12238), activation time (ms)	Responce time (ISO12238), deactivation time (ms)	Working pressure (bar)	Minimum piloting pressure (bar)	Temperature °C	Weight (gr.)
Filtered air, with or without lubrication	1000	20	38	From vacuum to 10	2	-5 ÷ +50	280

Solenoid-Differential

Ordering code	
2741.52.00.Ⓟ.Ⓥ	
Ⓟ	PILOTING
	36=Self feeding
	26=External feeding
Ⓥ	VOLTAGE
	01=12V DC
	02=24V DC
	08=24V DC 1W

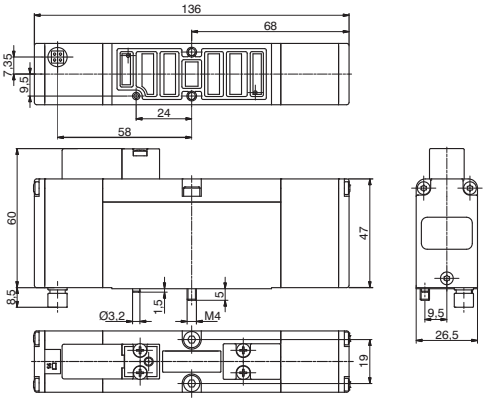

SHORT FUNCTION CODE (Self feeding) "BA"
SHORT FUNCTION CODE (External feeding) "BE"

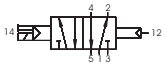

Note:
The "Activations time" values, are valid only for the 2,3W versions "Shifting time of pneumatic directional control valves or moving parts, logic devices were measured in accordance to ISO 12238:2001, Pneumatic fluid power - Directional control valves - Measurement of shifting time."

Operating Characteristics

Fluid	Flow rate at 6 bar with Δp=1(Nl/min)	Responce time (ISO12238), activation time (ms)	Responce time (ISO12238), deactivation time (ms)	Working pressure (bar)	Minimum piloting pressure (bar)	Temperature °C	Weight (gr.)
Filtered air, with or without lubrication	1000	20	38	From vacuum to 10	2	-5 ÷ +50	280

Solenoid-Solenoid

Ordering code	
2741.52.00.Ⓟ.Ⓥ	
Ⓟ	PILOTING
	35=Self feeding
	24=External feeding
Ⓥ	VOLTAGE
	01=12V DC
	02=24V DC
	08=24V DC 1W

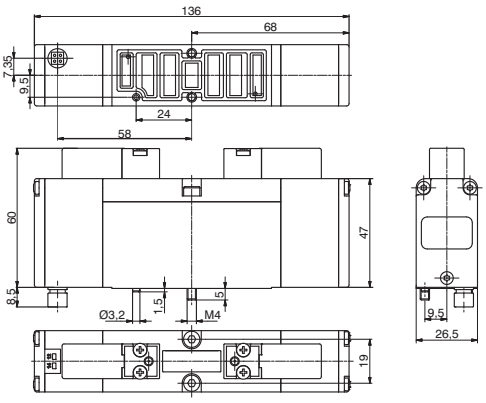

SHORT FUNCTION CODE (Self feeding) "CA"
SHORT FUNCTION CODE (External feeding) "CE"

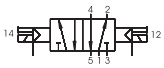

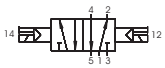

Note:
The "Activations time" values, are valid only for the 2,3W versions "Shifting time of pneumatic directional control valves or moving parts, logic devices were measured in accordance to ISO 12238:2001, Pneumatic fluid power - Directional control valves - Measurement of shifting time."

Operating Characteristics

Fluid	Flow rate at 6 bar with Δp=1(Nl/min)	Responce time (ISO12238), activation time (ms)	Responce time (ISO12238), deactivation time (ms)	Working pressure (bar)	Minimum piloting pressure (bar)	Temperature °C	Weight (gr.)
Filtered air, with or without lubrication	1000	12	14	From vacuum to 10	2	-5 ÷ +50	310

Solenoid-Solenoid

Ordering code	
2741.53.31.Ⓟ.Ⓥ	
Ⓟ	PILOTING
	35=Self feeding
	24=External feeding
Ⓥ	VOLTAGE
	01=12V DC
	02=24V DC
	08=24V DC 1W

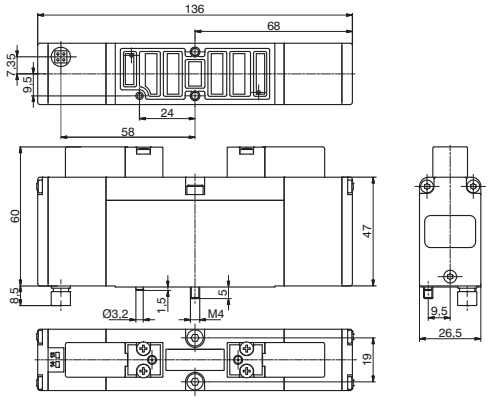

SHORT FUNCTION CODE (Self feeding) "EA"
SHORT FUNCTION CODE (External feeding) "EE"

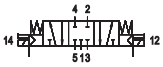

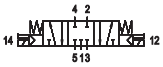

Note:
The "Activations time" values, are valid only for the 2,3W versions "Shifting time of pneumatic directional control valves or moving parts, logic devices were measured in accordance to ISO 12238:2001, Pneumatic fluid power - Directional control valves - Measurement of shifting time."

Operating Characteristics

Fluid	Flow rate at 6 bar with Δp=1(Nl/min)	Responce time (ISO12238), activation time (ms)	Responce time (ISO12238), deactivation time (ms)	Working pressure (bar)	Minimum piloting pressure (bar)	Temperature °C	Weight (gr.)
Filtered air, with or without lubrication	660	12	60	From vacuum to 10	3	-5 ÷ +50	310

Solenoid-Solenoid (Self feeding)

Ordering code	
2741.62.Ⓕ.35.Ⓥ	
Ⓕ	FUNCTION
	44=2 Coils 3/2 NC
	45=1 Coil 3/2 NC (14) + 1 Coil 3/2 NO (12)
	55=2 Coils 3/2 NO
	54=1 Coil 3/2 NO (14) + 1 Coil 3/2 NC (12)
Ⓥ	VOLTAGE
	01=12V DC
	02=24V DC
	08=24V DC 1 Watt

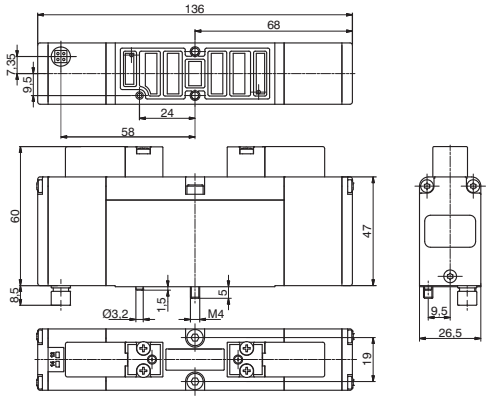

SHORT FUNCTION CODE:
2 3/2 NC="FA"
1 3/2 NC (14) + 1 3/2 NO (12)="HA"
2 3/2 NO="GA"
1 3/2 NO (14) + 1 3/2 NC (12)="IA"

Note: The "Activations time" values, are valid only for the 2,3W versions "Shifting time of pneumatic directional control valves or moving parts, logic devices were measured in accordance to ISO 12238:2001, Pneumatic fluid power - Directional control valves - Measurement of shifting time."

Operating Characteristics

Example: if inlet pressure is set at 5bar then pilot pressure must be at least Pp=2+(0.3*5)=3,5bar

Fluid	Flow rate at 6 bar with Δp=1(Nl/min)	Responce time (ISO12238), activation time (ms)	Responce time (ISO12238), deactivation time (ms)	Working pressure (bar)	Minimum piloting pressure (bar)	Temperature °C	Weight (gr.)
Filtered air, with or without lubrication	550	15	15	From vacuum to 10	≥2+(0,3xP.alim.)	-5 ÷ +50	310

Solenoid-Solenoid (External feeding)

Ordering code	
2741.62.Ⓕ.24.Ⓥ	
Ⓕ	FUNCTION
	44=2 Coils 3/2 NC
	45=1 Coil 3/2 NC (14) + 1 Coil 3/2 NO (12)
	55=2 Coils 3/2 NO
	54=1 Coil 3/2 NO (14) + 1 Coil 3/2 NC (12)
Ⓥ	VOLTAGE
	01=12V DC
	02=24V DC
	08=24V DC 1 Watt

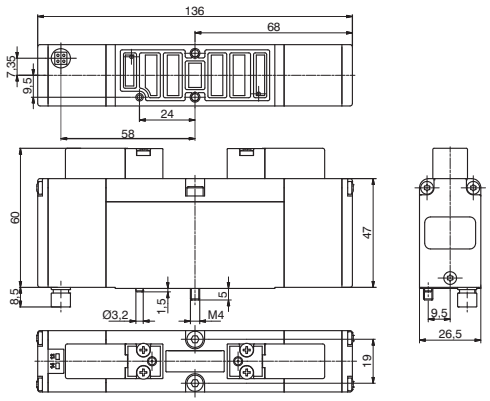

SHORT FUNCTION CODE:
2 3/2 NC="FE"
1 3/2 NC (14) + 1 3/2 NO (12)="HE"
2 3/2 NO="GE"
1 3/2 NO (14) + 1 3/2 NC (12)="IE"

Note: The "Activations time" values, are valid only for the 2,3W versions "Shifting time of pneumatic directional control valves or moving parts, logic devices were measured in accordance to ISO 12238:2001, Pneumatic fluid power - Directional control valves - Measurement of shifting time."

Operating Characteristics

Example: if inlet pressure is set at 5bar then pilot pressure must be at least Pp=2+(0.3*5)=3,5bar

Fluid	Flow rate at 6 bar with Δp=1(Nl/min)	Responce time (ISO12238), activation time (ms)	Responce time (ISO12238), deactivation time (ms)	Working pressure (bar)	Minimum piloting pressure (bar)	Temperature °C	Weight (gr.)
Filtered air, with or without lubrication	550	12	60	From vacuum to 10	≥2+(0,3xP.alim.)	-5 ÷ +50	310

Left Endplates

Ordering code

2740.02.Ⓒ

	CONNECTIONS
Ⓒ	37P=Connectors 37 poles PNP
	25P=Connectors 25 poles PNP
	37N=Connectors 37 poles NPN
	25N=Connectors 25 poles NPN

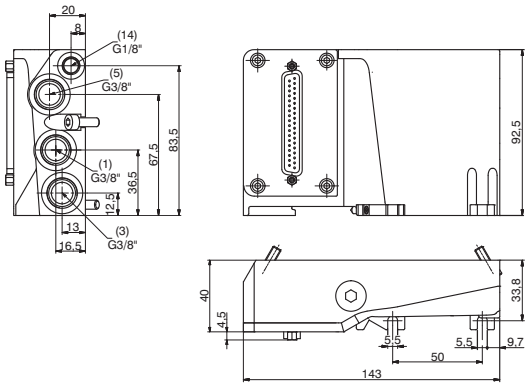

Operating Characteristics

Fluid	Working pressure (bar)	Temperature °C	Weight (gr.)
Filtered air, with or without lubrication	From vacuum to 10	-5 ÷ +50	600

Right Endplates

Ordering code

2740.03.Ⓒ

	CONNECTIONS
Ⓒ	00=Exhaust electrical connection closed
	25P=Connectors 25 poles

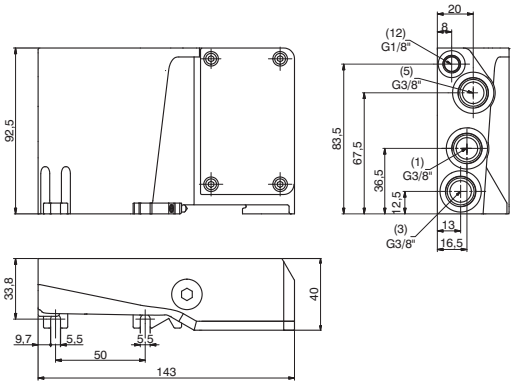

Operating Characteristics

Fluid	Working pressure (bar)	Temperature °C	Weight (gr.)
Filtered air, with or without lubrication	From vacuum to 10	-5 ÷ +50	600

Modular base

Ordering code

2740.01Ⓥ

	VERSION
Ⓥ	M=Monostable
	B=Bistable

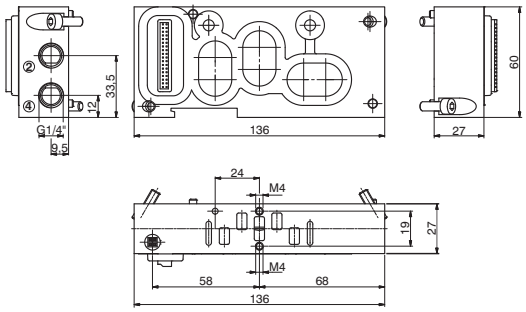

Operating Characteristics

Fluid	Working pressure (bar)	Temperature °C	Weight (gr.)
Filtered air, with or without lubrication	From vacuum to 10	-5 ÷ +50	330

Closing plate

Ordering code
2740.00

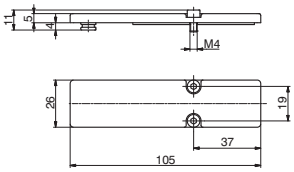

SHORT FUNCTION CODE: "T"

Operating Characteristics

Fluid	Working pressure (bar)	Temperature °C	Weight (gr.)
Filtered air, with or without lubrication	From vacuum to 10	-5 ÷ +50	100

2

Cable complete with connector, 25 Poles IP65

Ordering code	
2300.25.Ⓛ.Ⓒ	
Ⓛ	CABLE LENGTH
	03=3 meters
	05=5 meters
	10=10 meters
Ⓒ	CONNECTOR
	10=In line
	90=90° Angle

Cable complete with connector, 37 Poles IP65

Ordering code	
2400.37.Ⓛ.Ⓒ	
Ⓛ	CABLE LENGTH
	03=3 meters
	05=5 meters
	10=10 meters
Ⓒ	CONNECTOR
	10=In line
	90=90° Angle

Cable complete with connector, 25 Poles IP65

Ordering code	
2400.25.Ⓛ.25	
Ⓛ	CABLE LENGTH
	03=3 meters
	05=5 meters
	10=10 meters

Diaphragm plug

Ordering code
2740.17

Constructions characteristics

Weight (gr.)
65

The electrical connection is achieved by a 37 pin connector and can manage up to 32 solenoid pilots.
It is also possible use a 25 sub-D pin connector and, in this case, it is possible to manage a maximum of 22 outputs.
The management and distribution of the electrical signals between each valve is obtained thanks to an electrical connector which receives the signals from the previous module, uses one, two or none depending on the type, and carries forward to the next module the remaining.
Bistable valves, 5/3 and 2x3/2 valves which have two solenoid pilots built in, use two signals; the first is directed to the pilot side 14 the second to the pilot side 12. Modular bases can be fitted with two type of electrical connector: the monostable version uses only one signal (connected to the pilot side 14) and carries forward the remaining, the bistable version which always uses two signals.
This solution allows the modification of the manifold (replacement of monostable valves without bistable for example) without having to reset the PLC output layout.
On other hand this solution limits the maximum number of valves to 16 when it is used a 37 pin connector or 11 when it is used a 25 pin connector.
Intermediate supply/exhaust module uses an electrical connector directly forwarding signals to the next one without any kind of modification.
This allows the use of intermediate modules in any position of the manifold.
All the electrical signals that have not been used on the manifold can be used placing at the end of the manifold the end plate complete with the 25 sub-D female connector.
The number of available signals depends of the connector used to the type of the left end plate and by the total signals used along the manifold:

37 pin connector	nr of output = 32 – (total of used signals)
25 pin connector	nr of output = 22 – (total of used signals)

Following we show some examples of possible combination and the relative pin assignment.

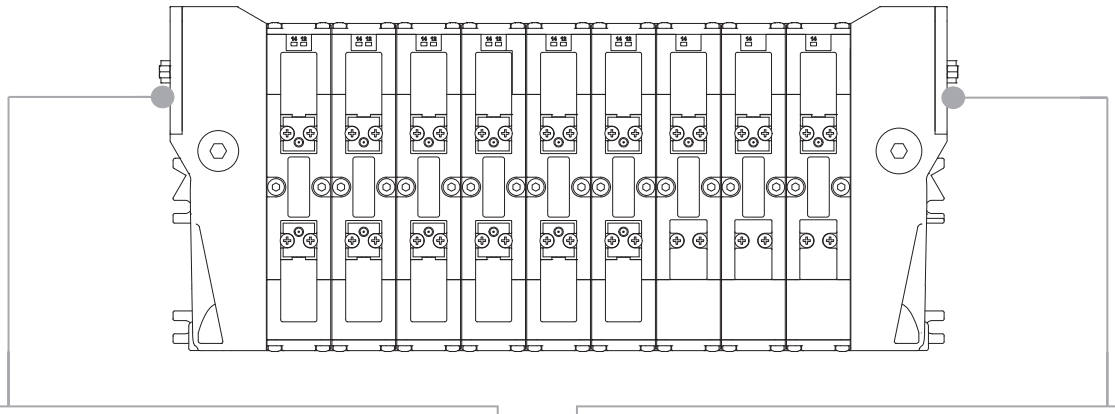

IN-LET ELECTRIC CONNECTIONS

SUB-D 37 POLE
MALE CONNECTOR

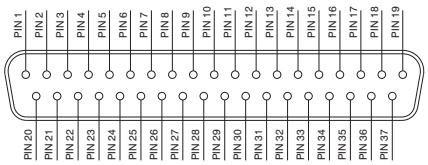

1 - 32 = SOLENOID VALVES SIGNAL
33 - 35 = GND
36 - 37 = THROUGH LINE

SUB-D 25 POLE
MALE CONNECTOR

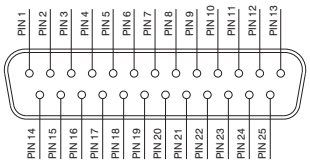

1 - 22 = SOLENOID VALVES SIGNAL
23 - 24 = GND
25 = THROUGH LINE

OUTLET ELECTRIC CONNECTIONS (IF PRESENT)

SUB-D 25 POLE
FEMALE CONNECTOR

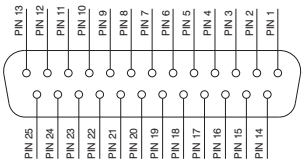

1 - 22 = SOLENOID VALVES SIGNAL
23 - 24 = GND
25 = THROUGH

2

37 PIN Connector correspondence for valves assembled on mixed bases

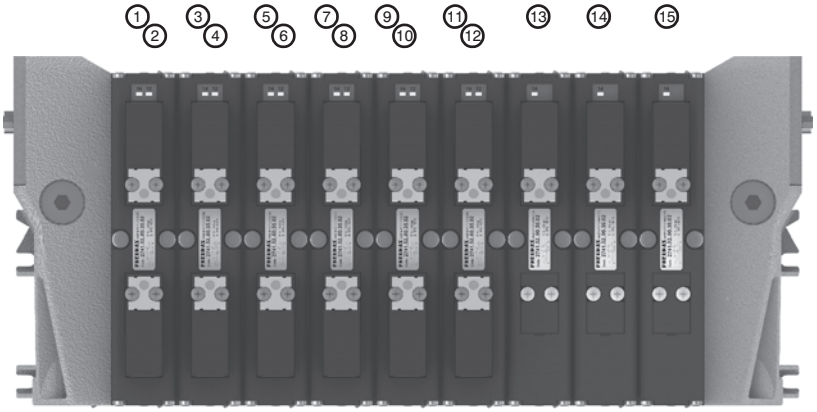

PIN 1 = PILOT 14 EV POS.1
PIN 2 = PILOT 12 EV POS.1
PIN 3 = PILOT 14 EV POS.2
PIN 4 = PILOT 12 EV POS.2
PIN 5 = PILOT 14 EV POS.3
PIN 6 = PILOT 12 EV POS.3
PIN 7 = PILOT 14 EV POS.4
PIN 8 = PILOT 12 EV POS.4
PIN 9 = PILOT 14 EV POS.5
PIN 10 = PILOT 12 EV POS.5
PIN 11 = PILOT 14 EV POS.6
PIN 12 = PILOT 12 EV POS.6
PIN 13 = PILOT 14 EV POS.7
PIN 14 = PILOT 14 EV POS.8
PIN 15 = PILOT 14 EV POS.9

POS.	1	2	3	4	5	6	7	8	9

37 PIN Connector correspondence for manifold mounted on bases for bistable valves

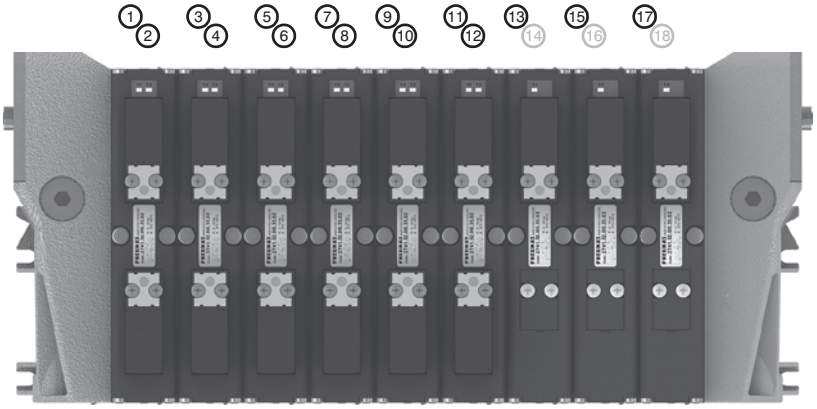

PIN 1 = PILOT 14 EV POS.1
PIN 2 = PILOT 12 EV POS.1
PIN 3 = PILOT 14 EV POS.2
PIN 4 = PILOT 12 EV POS.2
PIN 5 = PILOT 14 EV POS.3
PIN 6 = PILOT 12 EV POS.3
PIN 7 = PILOT 14 EV POS.4
PIN 8 = PILOT 12 EV POS.4
PIN 9 = PILOT 14 EV POS.5
PIN 10 = PILOT 12 EV POS.5
PIN 11 = PILOT 14 EV POS.6
PIN 12 = PILOT 12 EV POS.6
PIN 13 = PILOT 14 EV POS.7
PIN 14 = NOT CONNECTED
PIN 15 = PILOT 14 EV POS.8
PIN 16 = NOT CONNECTED
PIN 17 = PILOT 14 EV POS.9
PIN 18 = NOT CONNECTED

POS.	1	2	3	4	5	6	7	8	9

37 PIN Connector correspondence for manifold for 32 position manifold with monostable valves on base

37P

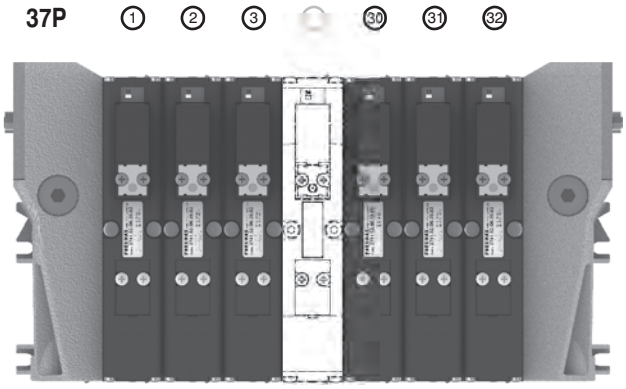

POS.	1	2	3	...	30	31	32

25P

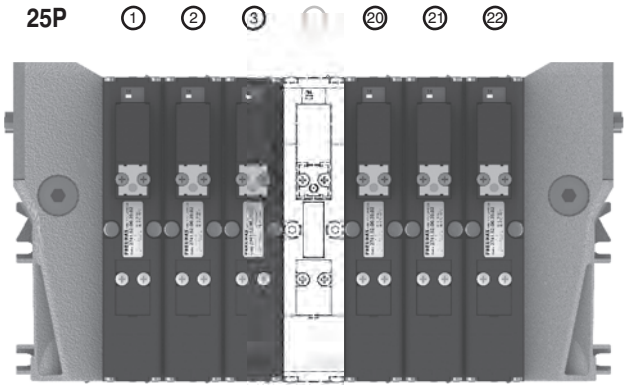

POS.	1	2	3	...	20	21	22

General :

Using the 2740.03.25P output terminal it is possible to make any electrical signals not used by valves available on a 25 sub-D female connector at the right end of the manifold.
It is possible to then join a multi-core cable to link to the next manifold, or connect directly to one or two I/O modules.
The I/O modules can accept input or output signals, depending upon what is connected.

Ordering code

2540.08T

Please note: If the manifold is connected by a multi-core connection, each connection can be used as either an input or an output, while if the manifold is connected to a serial node the connections can only be used as an output.

It is possible to connect the manifold to up to two I/O modules.

Each I/O module includes 8 diagnostic LEDs which indicate the presence of an Input / Output signal for each connector.

Please note: For an LED to function, a signal of at least +15VDC must be present on pin 4 of the connector. If this signal is lower, the LED will not light, this does not compromise the normal Input / Output function of the unit.

Overall dimensions and I/O layout :

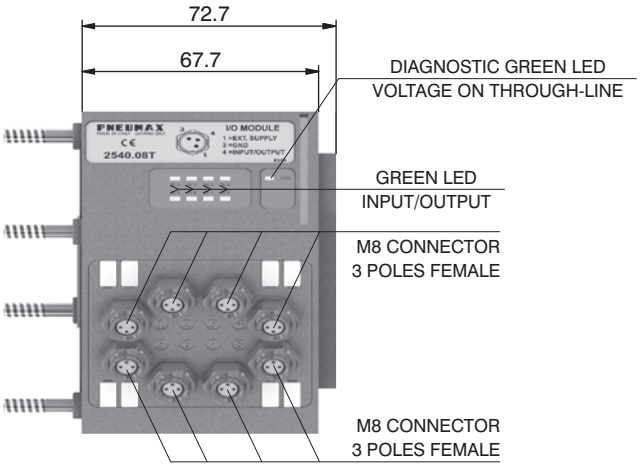

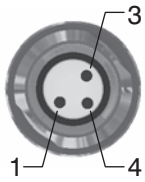

PIN	DESCRIPTION
1	+24 VDC
4	INPUT/OUTPUT
3	GND

Input features:

Each connection can accept either two wire (switches, magnetic switches, pressure switches, etc.) or three wire connections (photocells, electronic end of stroke sensors, etc.) If +24VDC is required on at Pin 1 of each connector, it is possible to provide this via the through-line pin of the multi-pole connector.
I.E :
Pin 25 of the 25 pin multi-pole connector (code 2740.02.25P or 2740.12.25P)
Pin 36-37 of the 37 pin multi-pole connector (code 2740.02.37P or 2740.12.37P)

Output features:

Attention: The output connections are not protected against short-circuit. Please pay attention when wiring (avoid Pin 4 being connected to Pin 3 or Pin 1).

	Model	2540.08T
	Case	Reinforced technopolymer
General characteristics	I/O Connector	M8 connector 3 poles female (IEC 60947-5-2)
	PIN 1 voltage (connector used as Input)	By the user
	PIN 4 voltage diagnosis	Green Led
	Node consumption (Outlets excluded)	7mA per each LED with 24 VDC signal
	Outlets voltage	+23,3 VDC (serial) /by the user (multipolar)
	Input voltage	Depend by the using
	Maximum outlet current	100 mA (serial) / 400 mA (multipolar)
	Maximum Input/Output	8 per module
	Multiconnector max. Current	100 mA
	Connections to manifold	Direct connection to 25 poles connector
	Maximum n. of moduls	2
	Protection degree	IP65 when assembled
	Ambient temperature	from -0° to +50° C

CORRESPONDENCE BETWEEN MULTI-POLE SIGNAL AND CONNECTOR

SUB-D TYPE 37 POLE MALE CONNECTOR

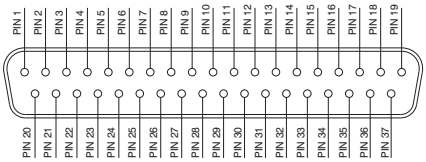

1 - 32 = SIGNALS
33 - 35 = GND
36 - 37 = THROUGH LINE

SUB-D TYPE 25 POLE MALE CONNECTOR

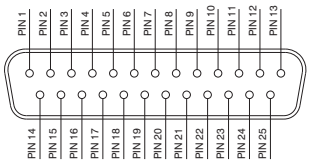

1 - 22 = SIGNALS
23 - 24 = GND
25 = THROUGH LINE

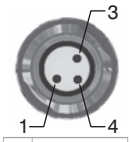

PIN	DESCRIPTION
1	THROUGH LINE
4	SIGNAL
3	GND

Connection modes:

The I/O module changes it is operation depending on the way the manifold is controlled. There are two possible modes:

A) Control via multi-pole connection
B) Control via fieldbus

In order to use the I/O module, the correct right hand endplate with 25 pole female outlet connector must be used.
(Code 2740.03.25P).

A) Control via multi-pole :

M8 connector used as Input:

Attention: Voltage applied to each connector is passed to multi-pole connector pin.

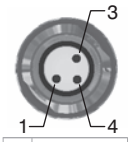

PIN	DESCRIPTION
1	THROUGH LINE
4	SIGNAL
3	GND

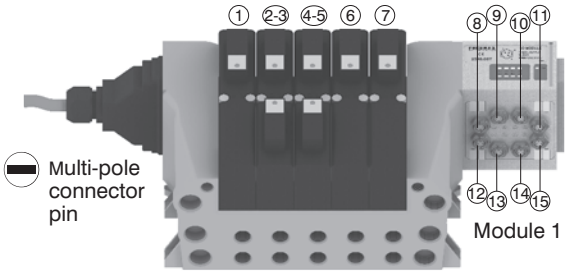

Attention: Only one more I/O module can be added.

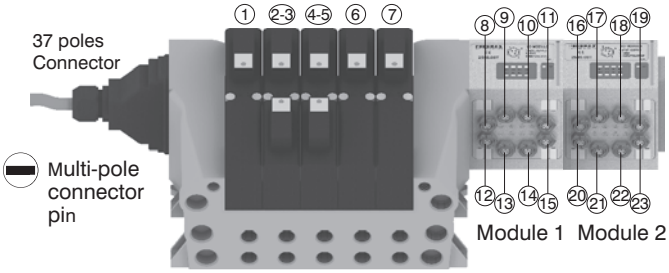

Attention: No more additions are possible

M8 connector used as Output:

Output voltage will the same as is applied at the multi-pole connector pin.
The maximum output current depends upon the power unit used, but we recommend no more than 250mA.

Attention: Since every cable has a degree of resistance, there will always be a voltage drop depending on the cable's length, sectional area and the current.

Attention : 2700 solenoid valve manifolds permit up to 22 electrical signals that are not used by manifolds to be made available: these signals can be managed by another manifold and / or by I/O modules.
The I/O module will manage these unused signals. Connections that are not managing useful signals will remain unconnected.

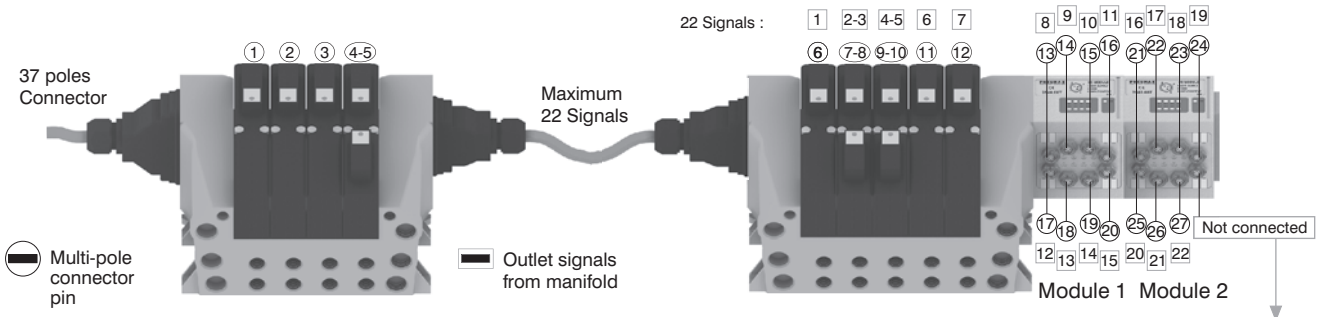

Please note: this example considers a 37 pin multi-pole connector.
The same configuration managed by a 25 pin multi-pole connector will stop at number 22 of multi-pole connector and at number 17 of the manifold. 22 17

Attention:
Signal Not connected
GND Connected
Through line Connected

Please note: 2700 solenoid valve manifolds manage up to 32 signals. If the manifold uses more than 24 signals the I/O module will manage only the remainder. Connections that are not managing useful signals will remain unconnected.

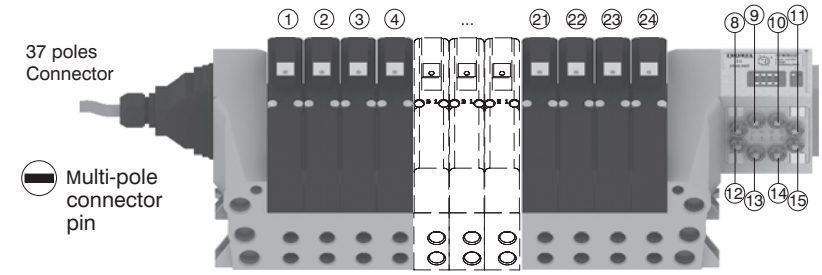

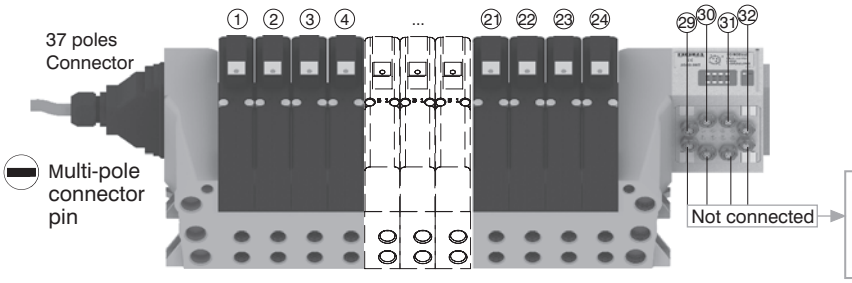

Attention:
Signal Not connected
GND Connected
Through line Connected

B) Control via fieldbus:

With this kind of control the I/O module can only be used as an output. Pin 1 of each connector is not connected. The output voltage will be 0.7V lower than that applied to Pin 4 of the connector.
The maximum output current for each output is 100mA. The correspondence between control byte and each single output depends on how many electrical signals are used by the manifold and by the relative position of the I/O module.

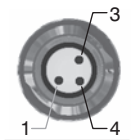

PIN	DESCRIPTION
1	NOT CONNECTED
4	SIGNAL
3	GND

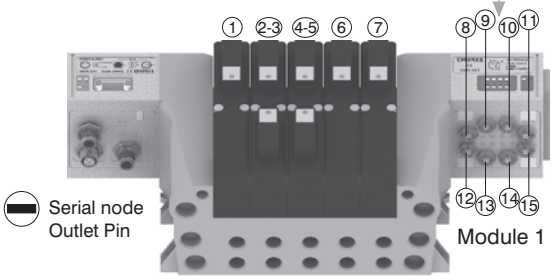

Attention:
Output only

Attention:
Only one more
I/O module
can be added.

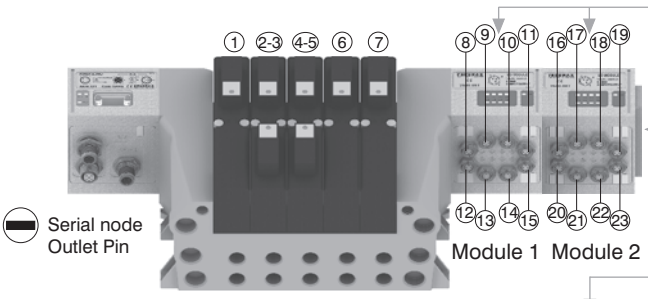

Attention:
Output only

Attention:
No more additions
are possible

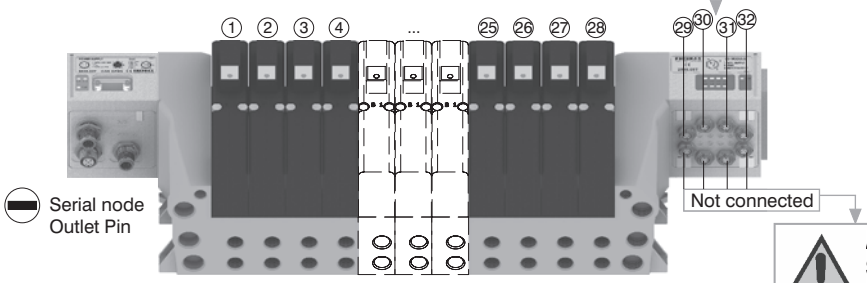

Attention:
Output only

Attention:
Signal Not connected
GND Connected

Please note: I/O modules don't allow to connect any additional valves manifold after them.

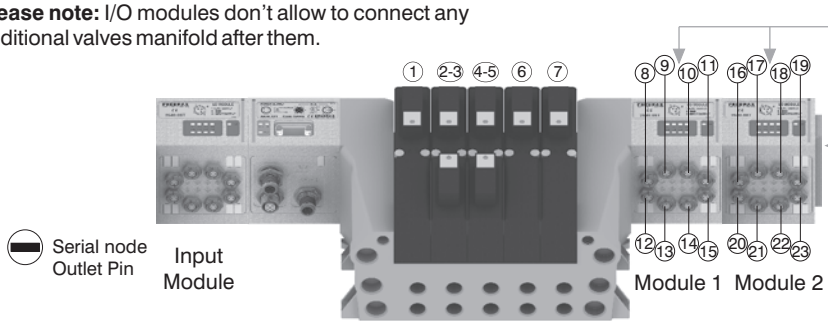

Attention:
Output only

Attention:
No more additions
are possible

2

From the top

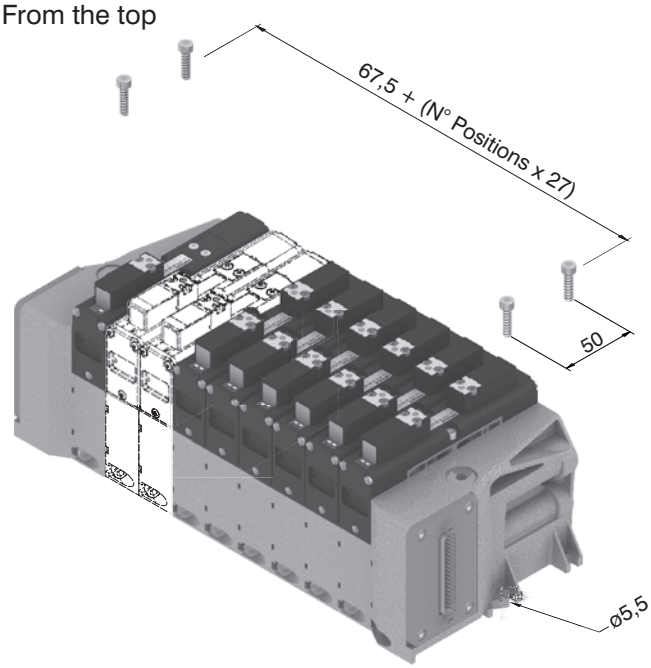

DIN rail fixing

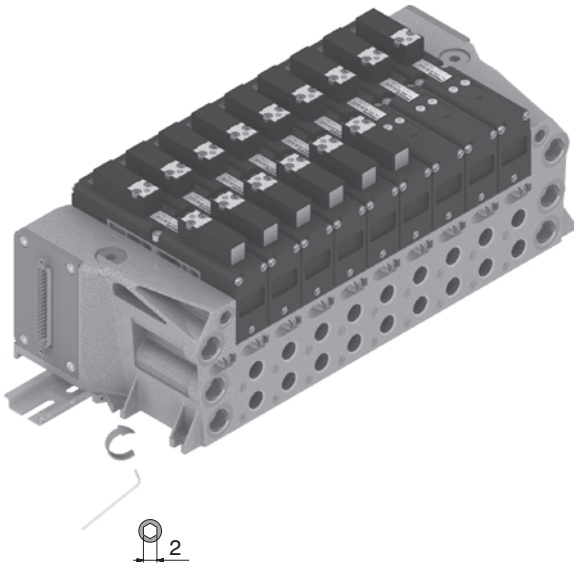

Maximum possible size according to valves seats

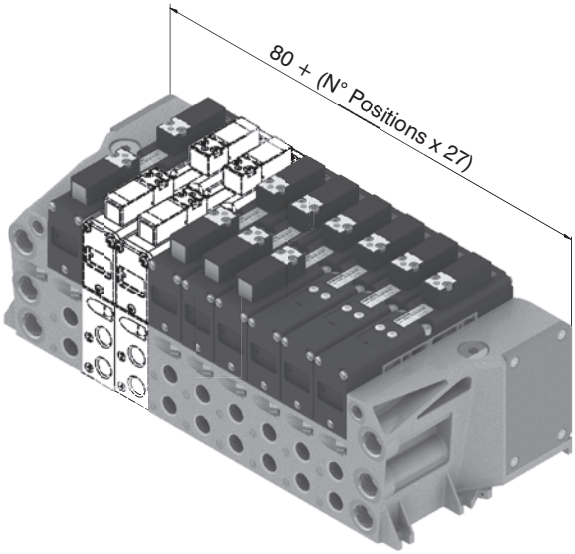

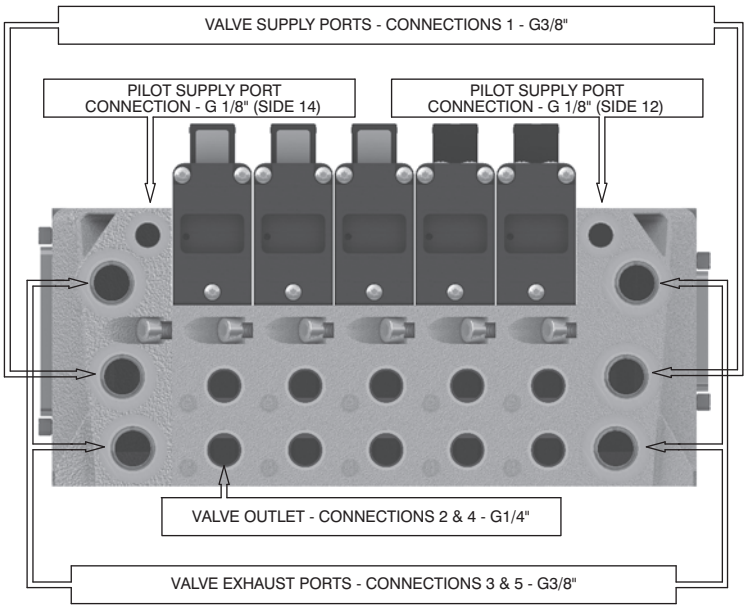

Manifold Layout configuration

LEFT ENDPLATE

E2 = 25 poles
E3 = 37 poles

RIGHT ENDPLATE

U0 = Closed
U2 = 25 Poles

MULTIPOINT CONNECTION

MP = PNP 24 V DC
MN = NPN 24 V DC

I/O MODULE

M8
(Requires 25 poles right endplate)

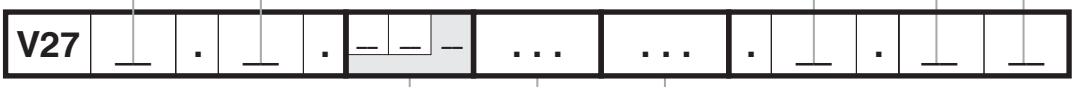

MODUL CONFIGURATION

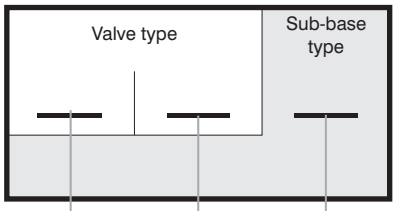

ACCESSORIES CONFIGURATION

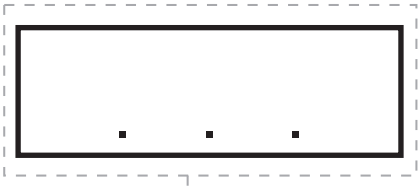

SUB-BASE TYPE

1 = Base type 1 for Monostable
(1 electrical signal occupied)
2 = Base type 2 for Bistable
(2 electrical signals occupied)

ACCESSORIES

X = Diaphragm plug on pipe 1
Y = Diaphragm plug on pipe 3
Z = Diaphragm plug on pipe 5
XY = Diaphragm plug on pipe 1 & 3
ZX = Diaphragm plug on pipe 5 & 1
ZY = Diaphragm plug on pipe 5 & 3
ZXY = Diaphragm plug on pipe 5, 1 & 3

VALVE TYPE:

A = Self-feeding
E = External feeding

SHORT CODE FUNCTION / CONNECTION :

A= 5/2 SOLENOID - SPRING
B= 5/2 SOLENOIS - DIFFERENTIAL
C= 5/2 SOLENOID - SOLENOID
E= 5/3 CC SOLENOID -SOLENOID
F= 2x3/2 NC-NC (= 5/3 OC) SOLENOID -SOLENOID
G= 2x3/2 NO-NO (= 5/3 PC) SOLENOID -SOLENOID
H= 2x3/2 NC-NO SOLENOID -SOLENOID
I= 2x3/2 NO-NC SOLENOID -SOLENOID
T= FREE VALVE SPACE PLUG

NOTE:
While configuring the manifold always be careful that the maximum number of electrical signals available is:
32 when an input 37 poles endplate is used.
22 when an input 25 poles endplate is used.
The use of monostable valve mounted on a base type 2 (2 electrical signals occupied) causes the loss of one electric signal.
In this case the monostable valve can be replaced by a bistable valve. The diaphragms plugs are used to intercept the conduits 1,3 & 5 of the base. If it is necessary to interrupt more than one conduit in the same time then put in line the letters which identifies the position (for exemple : regarding the 3 & 5 conduits, put the Y & Z letters).
Should one or more conduits be cut more than one time it is necessary to add the relevant intermediate Supply/Exhaust module.

2

General:

CANopen® module is directly integrated on 2700 solenoid valves manifold via a 37 poles connector, normally used for multipolar cable connection.
2700 series solenoid valves connected to node must be PNP equivalent (final 02 in ordering code).
The node can be easily installed also on solenoid valves manifold already mounted on equipment.
Module can manage up to 32 solenoid valves, and, in the same time, a max number of 4 Input modules 5225.08T or a max number of 4 Input modules 5225.12T.
CANopen® module recognizes automatically the presence of the Input modules on power on.
Regardless of the number of Input modules connected, the managable solenoid valves are 32.
Node power supply is made by a M12 4P male circular connector.
The separation between node 24 VDC Power supply and outputs 24 VDC allows to switch off the outputs maintaning powered the node and inputs, if present.
Connection to Bus CANopen® is possible via 2 M12 5P male - female circular connectors; these two are connected in parallel and according to CiA Draft Recommendation 303-1 (V. 1.3 : 30 December 2004).
Transmission speed can be set by 3 dip-switches.
The node address can be set by 6 dip-switches using BCD numeration.
The module includes an internal terminating resistance that can be activated by a dip-switch.

Ordering code

5525.32T

Scheme / Overall dimensions and I/O layout :

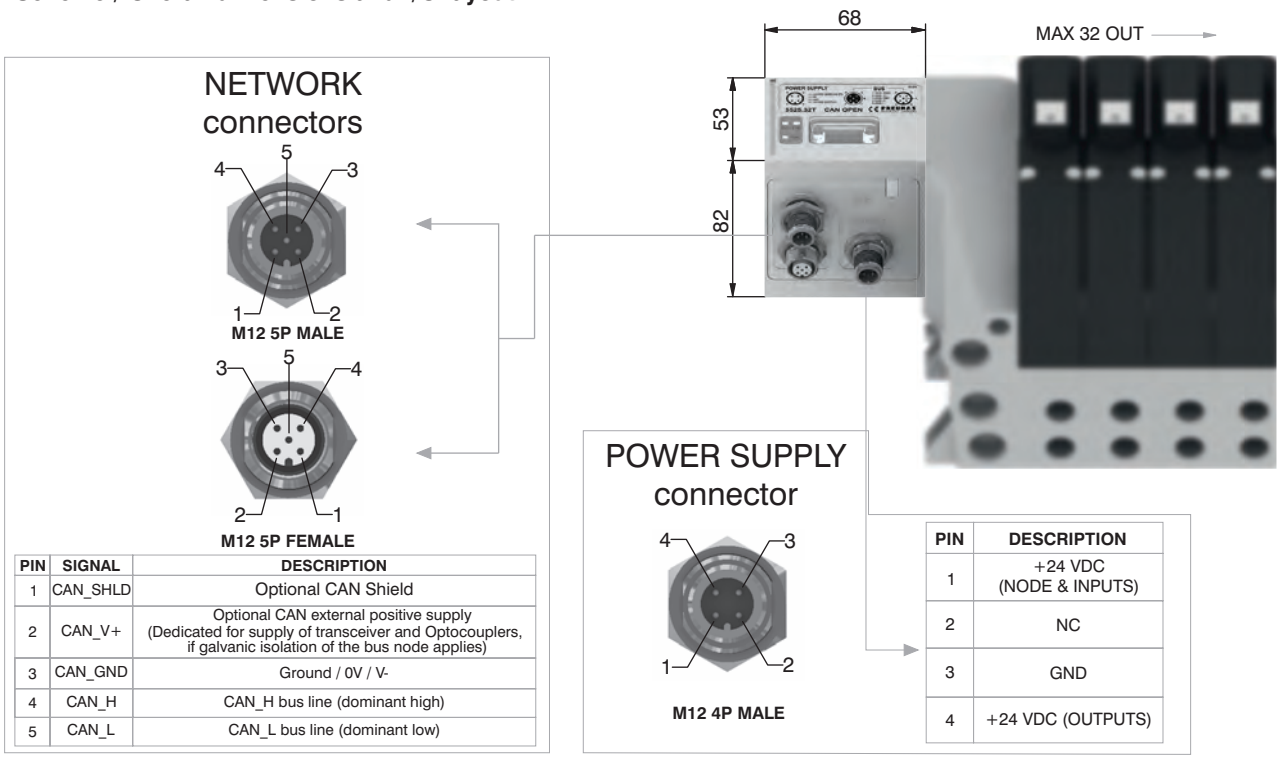

PIN	SIGNAL	DESCRIPTION
1	CAN_SHLD	Optional CAN Shield
2	CAN_V+	Optional CAN external positive supply (Dedicated for supply of transceiver and Optocouplers, if galvanic isolation of the bus node applies)
3	CAN_GND	Ground / 0V / V-
4	CAN_H	CAN_H bus line (dominant high)
5	CAN_L	CAN_L bus line (dominant low)

PIN	DESCRIPTION
1	+24 VDC (NODE & INPUTS)
2	NC
3	GND
4	+24 VDC (OUTPUTS)

Technical characteristics

	Model	5525.32T
	Specifications	CiA Draft Standard Proposal 301 V 4.10 (15 August 2006)
	Case	Reinforced technopolymer
Power supply	Power supply connection	M12 4P male connector (IEC 60947-5-2)
	Power supply voltage	+24 VDC +/- 10%
	Node consumption (without inputs)	30 mA
	Power supply diagnosis	Green LED PWR
Outputs	PNP equivalent outputs	+24 VDC +/- 10%
	Maximum current for each output	100 mA
	Maximum output number	32
	Max output simultaneously actuated	32
Network	Network connectors	2 M12 5P connectors male-female Type A (IEC 60947-5-2)
	Baud rate	10 - 20 - 50 - 125 - 250 - 500 - 800 - 1000 Kbit/s
	Addresses, possible numbers	From 1 to 63
	Max nodes in net	64 (slave + master)
	Bus maximum recommended length	100 m at 500 Kbit/s
	Bus diagnosis	Green LED + Red LED
	Configuration file	Available from our web site: http://www.pneumaxspa.com
	IP protection grade	IP65 when assembled
	Temperature range	From 0° to +50° C

General:

DeviceNet module is directly integrated on 2700 solenoid valves manifold via a 37 poles connector, normally used for multipolar cable connection.
2700 series solenoid valves connected to node must be PNP equivalent (final 02 in ordering code).
The node can be easily installed also on solenoid valves manifold already mounted on equipment.
Module can manage up to 32 solenoid valves, and, in the same time, a max number of 4 Input modules 5225.08T or a max number of 4 Input modules 5225.12T.
DeviceNet module recognizes automatically the presence of the Input modules on power on.
Regardless of the number of Input modules connected, the managable solenoid valves are 32.
Node power supply is made by a M12 4P male circular connector.
The separation between node 24 VDC Power supply and outputs 24 VDC allows to switch off the outputs maintaning powered the node and inputs, if present.
Connection to Bus DeviceNet is possible via 2 M12 5P male - female circular connectors; these two are connected in parallel and according to DeviceNet Specifications Volume I, release 2.0.
Transmission speed can be set by 3 dip-switches.
The node address can be set by 6 dip-switches using BCD numeration.
The module includes an internal terminating resistance that can be activated by a dip-switch.

Ordering code

5425.32T

Scheme / Overall dimensions and I/O layout :

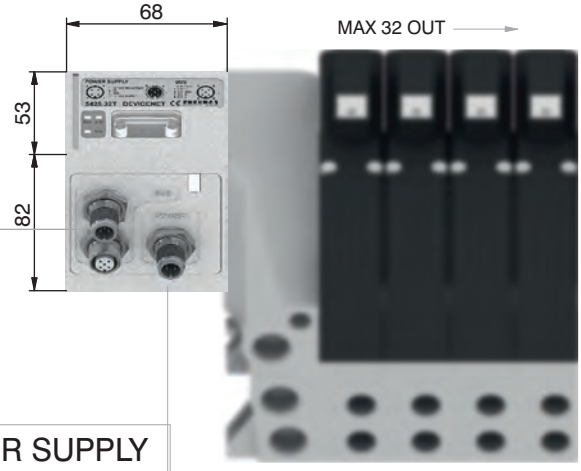

NETWORK connectors

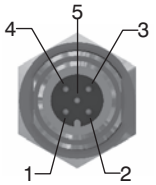

M12 5P MALE

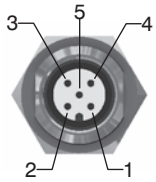

M12 5P FEMALE

PIN	SIGNAL	DESCRIPTION
1	CAN_SHLD	Optional CAN Shield
2	CAN_V+	Optional CAN external positive supply (Dedicated for supply of transceiver and Optocouplers, if galvanic isolation of the bus node applies)
3	CAN_GND	Ground / 0V / V-
4	CAN_H	CAN_H bus line (dominant high)
5	CAN_L	CAN_L bus line (dominant low)

POWER SUPPLY connector

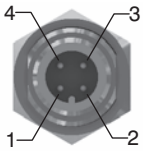

M12 4P MALE

PIN	DESCRIPTION
1	+24 VDC (NODE & INPUTS)
2	NC
3	GND
4	+24 VDC (OUTPUTS)

Technical characteristics

	Model	5425.32T
	Specifications	DeviceNet Specifications Volume I, release 2.0.
	Case	Reinforced technopolymer
Power supply	Power supply connection	M12 4P male connector (IEC 60947-5-2)
	Power supply voltage	+24 VDC +/- 10%
	Node consumption (without inputs)	30 mA
	Power supply diagnosis	Green LED PWR
Outputs	PNP equivalent outputs	+24 VDC +/- 10%
	Maximum current for each output	100 mA
	Maximum output number	32
	Max output simultaneously actuated	32
Network	Network connectors	2 M12 5P connectors male-female Type A (IEC 60947-5-2)
	Baud rate	125 - 250 - 500 Kbit/s
	Addresses, possible numbers	From 1 to 63
	Max nodes in net	64 (slave + master)
	Bus maximum recommended length	100 m at 500 Kbit/s
	Bus diagnosis	Green LED + Red LED
	Configuration file	Available from our web site: http://www.pneumaxspa.com
	IP protection grade	IP65 when assembled
	Temperature range	From 0° to +50° C

2

General:

PROFIBUS DP module is directly integrated on 2700 solenoid valves manifold via a 37 poles connector, normally used for multipolar cable connection.
2700 series solenoid valves connected to node must be PNP equivalent (final 02 in ordering code).
The node can be easily installed also on solenoid valves manifold already mounted on equipment.
Module can manage up to 32 solenoid valves, and, in the same time, a max number of 8 Input modules 5225.08T or a max number of 8 Input modules 5225.12T.
PROFIBUS DP module recognizes automatically the presence of the Input modules on power on.
Regardless of the number of Input modules connected, the managable solenoid valves are 32.
Node power supply is made by a M12 4P male circular connector.
The separation between node 24 VDC Power supply and outputs 24 VDC allows to switch off the outputs maintaning powered the node and inputs, if present.
Connection to Bus PROFIBUS DP is possible via 2 M12 type B 5P male - female circular connectors; these two are connected in parallel and according to PROFIBUS Interconnection Technology (Version 1.1 : August 2001).
The node address can be set using BCD numeration: 4 dip-switches for the units and 4 dip-switches for the tens.
The module includes an internal terminating resistance that can be activated by 2 dip-switches.

Ordering code

5325.32T

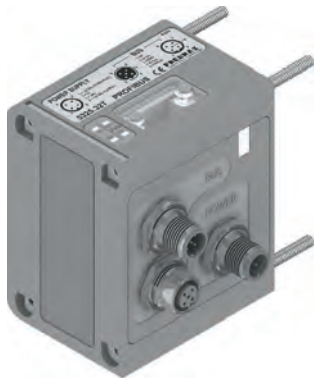

Scheme / Overall dimensions and I/O layout :

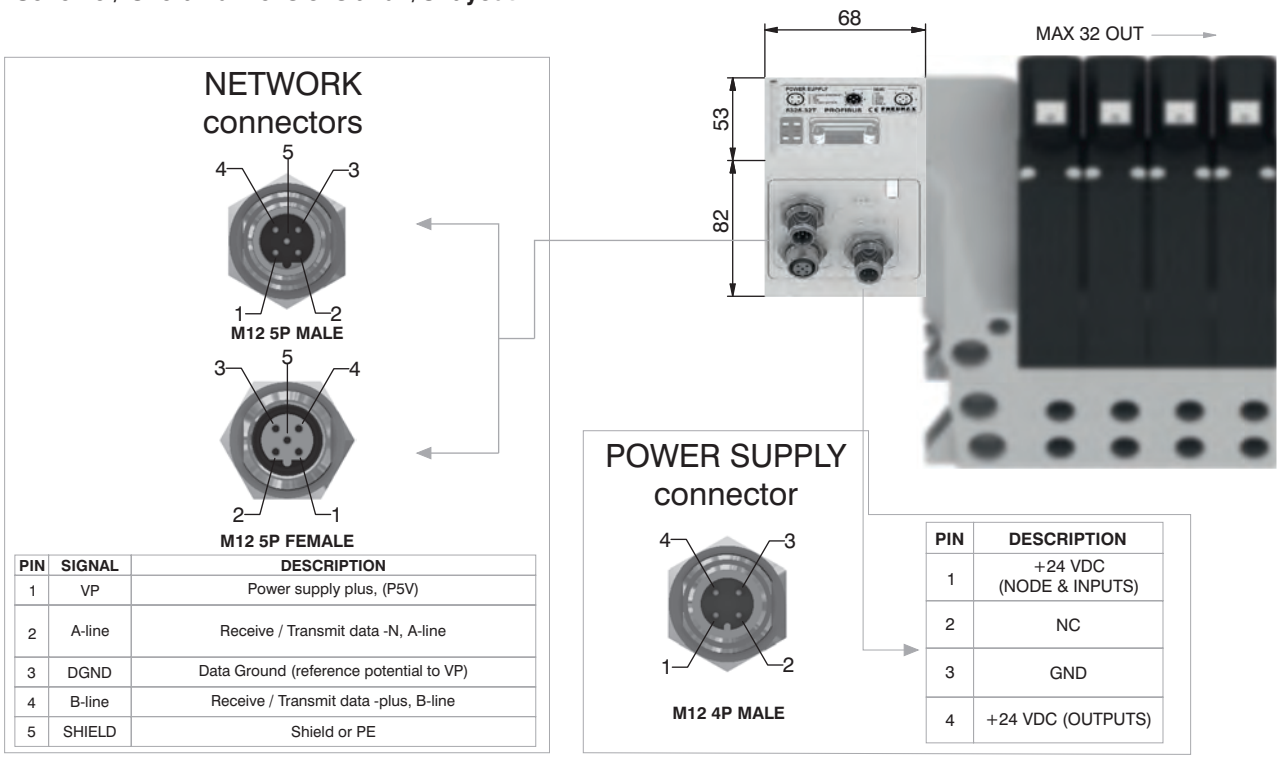

PIN	SIGNAL	DESCRIPTION
1	VP	Power supply plus, (P5V)
2	A-line	Receive / Transmit data -N, A-line
3	DGND	Data Ground (reference potential to VP)
4	B-line	Receive / Transmit data -plus, B-line
5	SHIELD	Shield or PE

PIN	DESCRIPTION
1	+24 VDC (NODE & INPUTS)
2	NC
3	GND
4	+24 VDC (OUTPUTS)

Technical characteristics

	Model	5325.32T
	Specifications	PROFIBUS DP
	Case	Reinforced technopolymer
Power supply	Power supply connection	M12 4P male connector (IEC 60947-5-2)
	Power supply voltage	+24 VDC +/- 10%
	Node consumption (without inputs)	50 mA
	Power supply diagnosis	Green LED PWR / Green LED OUT
Outputs	PNP equivalent outputs	+24 VDC +/- 10%
	Maximum current for each output	100 mA
	Maximum output number	32
	Max output simultaneously actuated	32
Network	Network connectors	2 M12 5P male-female connectors Type B
	Baud rate	9,6 - 19,2 - 93,75 - 187,5 - 500 - 1500 - 3000 - 6000 - 12000 Kbit/s
	Addresses, possible numbers	From 1 to 99
	Max nodes in net	100 (slave + master)
	Bus maximum recommended length	100 m at 12 Mbit/s - 1200 m at 9,6 Kbit/s
	Bus diagnosis	Green LED + Red LED
	Configuration file	Available from our web site: http://www.pneumaxspa.com
	IP protection grade	IP65 when assembled
	Temperature range	From 0° to +50° C

General:

EtherCAT® module is directly integrated on 2700 solenoid valves manifold via a 37 poles connector, normally used for multipolar cable connection.
2700 series solenoid valves connected to node must be PNP equivalent (final 02 in ordering code).
The node can be easily installed also on solenoid valves manifold already mounted on equipment.
Module can manage up to 32 solenoid valves, and, in the same time, a max number of 4 Input modules 5225.08T or a max number of 4 Input modules 5225.12T.
The EtherCAT® module, regardless the number of Input module connected, reports to have connected 4 Input modules.
Regardless of the number of Input modules connected, the managable solenoid valves are 32.
Node power supply is made by a M12 4P male circular connector.
The separation between node 24 VDC Power supply and outputs 24 VDC allows to switch off the outputs maintaning powered the node and inputs, if present.
Connection to Bus EtherCAT® is possible via 2 M12 4P type D female circular connectors. These two connectors lead the signal to two different communication ports, so they are not connected in parallel.
The node address is assigned during configuration.
Note: 5700 series has a different configuration file from series 5600.

Ordering code

5725.32T.EC

Scheme / Overall dimensions and I/O layout :

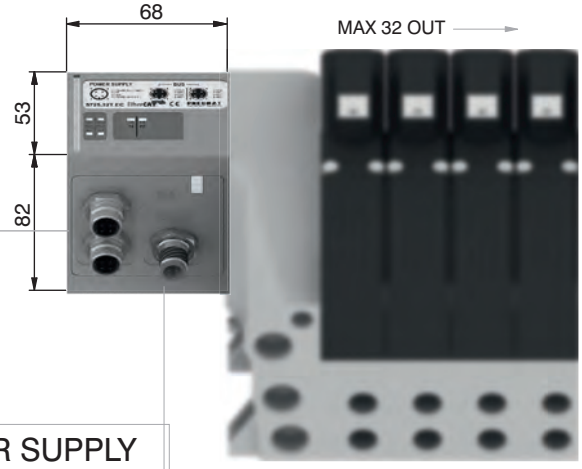

NETWORK connectors

M12 4P FEMALE

M12 4P FEMALE

PIN	SIGNAL	DESCRIPTION
1	TX+	Ethernet Transmit High
2	RX+	Ethernet Receive High
3	TX-	Ethernet Transmit Low
4	RX-	Ethernet Receive Low

POWER SUPPLY connector

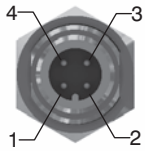

M12 4P MALE

PIN	DESCRIPTION
1	+24 VDC (NODE & INPUTS)
2	NC
3	GND
4	+24 VDC (OUTPUTS)

Technical characteristics

	Model	5725.32T.EC
	Specifications	EtherCAT® Specifications ETG.1000 series
	Case	Reinforced technopolymer
Power supply	Power supply connection	M12 4P male connector (IEC 60947-5-2)
	Power supply voltage	+24 VDC +/- 10%
	Node consumption (without inputs)	400 mA
	Power supply diagnosis	Green LEDPWR / Green LED OUT
Outputs	PNP equivalent outputs	+24 VDC +/- 10%
	Maximum current for each output	100 mA
	Maximum output number	32
	Max output simultaneously actuated	32
Network	Network connectors	2 M12 4P female connectors Type D (IEC 61076-2-101)
	Baud rate	100 Mbit/s
	Addresses, possible numbers	From 1 to 65535
	Max nodes in net	65536 (Master + Slave)
	Maximum distance between 2 nodes	100 m
	Bus diagnosis	1 green and 1 red LED for status + 2 LEDs for link & activity
	Configuration file	Available from our web site: http://www.pneumaxspa.com
	IP protection grade	IP65 when assembled
	Temperature range	From 0° to +50° C

2

General :

PROFINET IO RT/IRT module is directly integrated on 2700 solenoid valves manifold via a 37 poles connector, normally used for multipolar cable connection.
2700 series solenoid valves connected to node must be PNP equivalent (final 02 in ordering code).
The node can be easily installed also on solenoid valves manifold already mounted on equipment.
Module can manage up to 32 solenoid valves, and, in the same time, a max number of 8 Input modules 5225.08T or a max number of 8 Input modules 5225.12T.
The PROFINET IO RT/IRT module, regardless the number of Input module connected, reports to have connected 8 Input modules.
Regardless of the number of Input modules connected, the managable solenoid valves are 32.
Node power supply is made by a M12 4P male circular connector.
The separation between node 24 VDC Power supply and outputs 24 VDC allows to switch off the outputs maintaning powered the node and inputs, if present.
Connection to Bus PROFINET IO RT/IRT is possible via 2 M12 4P type D female circular connectors. These two connectors lead the signal to two different communication ports, so they are not connected in parallel.
The node address is assigned during configuration.

Ordering code

5725.32T.PN

Scheme / Overall dimensions and I/O layout :

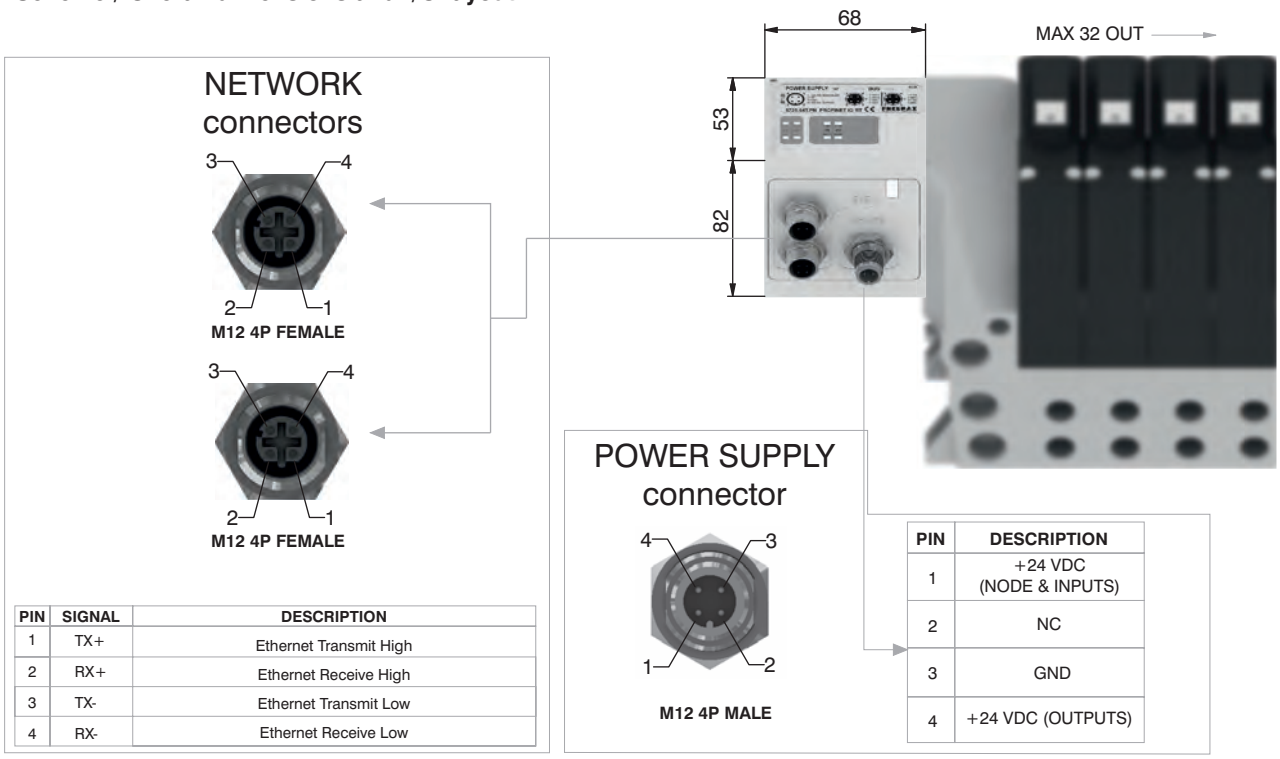

PIN	SIGNAL	DESCRIPTION
1	TX+	Ethernet Transmit High
2	RX+	Ethernet Receive High
3	TX-	Ethernet Transmit Low
4	RX-	Ethernet Receive Low

PIN	DESCRIPTION
1	+24 VDC (NODE & INPUTS)
2	NC
3	GND
4	+24 VDC (OUTPUTS)

Technical characteristics

	Model	5725.32T.PN
	Specifications	PROFINET IO RT/IRT
	Case	Reinforced technopolymer
Power supply	Power supply connection	M12 4P male connector (IEC 60947-5-2)
	Power supply voltage	+24 VDC +/- 10%
	Node consumption (without inputs)	400 mA
	Power supply diagnosis	Green LED PWR / Green LED OUT
Outputs	PNP equivalent outputs	+24 VDC +/- 10%
	Maximum current for each output	100 mA
	Maximum output number	32
	Max output simultaneously actuated	32
Network	Network connectors	2 M12 4P female connectors Type D (IEC 61076-2-101)
	Baud rate	100 Mbit/s
	Addresses, possible numbers	As an IP address
	Max nodes in net	As an Ethernet Network
	Maximum distance between 2 nodes	100 m
	Bus diagnosis	1 green and 1 red LED for status + 4 LEDs for link & activity
	Configuration file	Available from our web site: http://www.pneumaxspa.com
	IP protection grade	IP65 when assembled
	Temperature range	From 0° to +50° C

General :

EtherNet/IP module is directly integrated on 2700 solenoid valves manifold via a 37 poles connector, normally used for multipolar cable connection.
2700 series solenoid valves connected to node must be PNP equivalent (final 02 in ordering code).
The node can be easily installed also on solenoid valves manifold already mounted on equipment.
Module can manage up to 32 solenoid valves, and, in the same time, a max number of 8 Input modules 5225.08T or a max number of 8 Input modules 5225.12T.
The EtherNet/IP module, regardless the number of Input module connected, reports to have connected 8 Input modules.
Regardless of the number of Input modules connected, the managable solenoid valves are 32.
Node power supply is made by a M12 4P male circular connector.
The separation between node 24 VDC Power supply and outputs 24 VDC allows to switch off the outputs maintaning powered the node and inputs, if present.
Connection to Bus EtherNet/IP is possible via 2 M12 4P type D female circular connectors. These two connectors lead the signal to two different communication ports, so they are not connected in parallel.
The node address is assigned during configuration.

Ordering code

5725.32T.EI

Scheme / Overall dimensions and I/O layout :

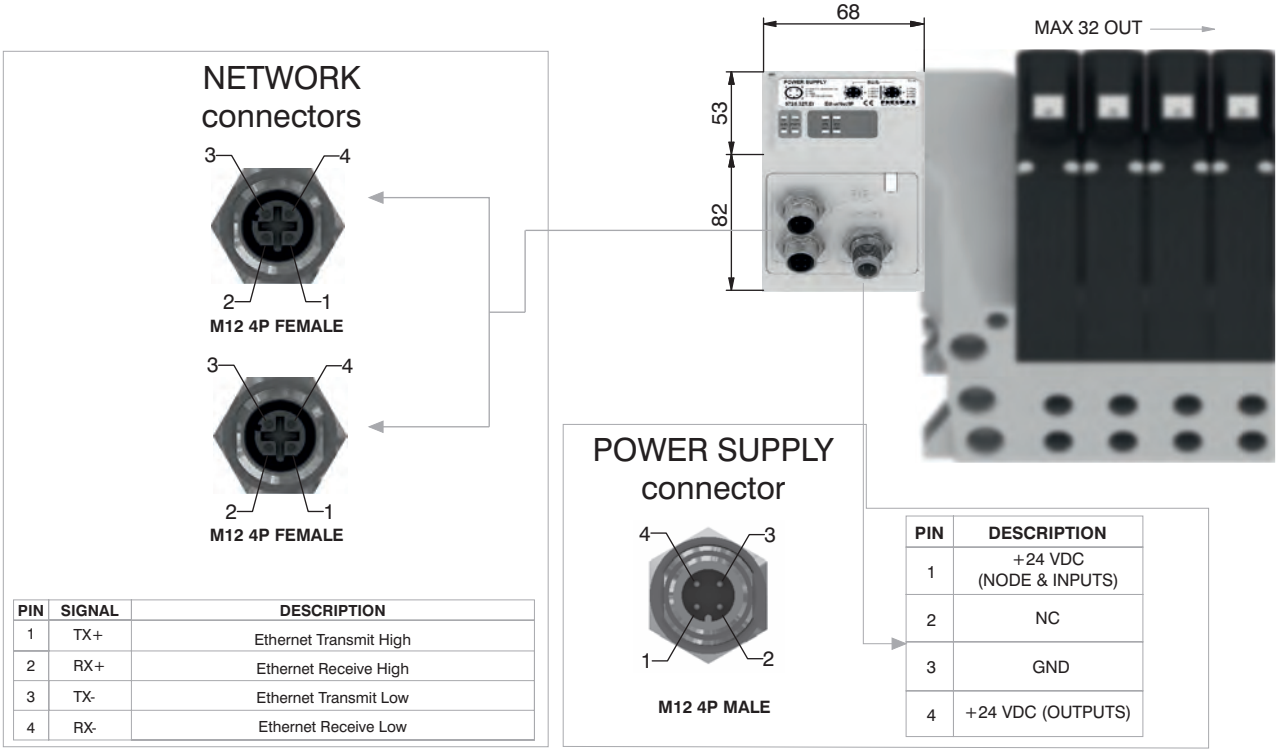

PIN	SIGNAL	DESCRIPTION
1	TX+	Ethernet Transmit High
2	RX+	Ethernet Receive High
3	TX-	Ethernet Transmit Low
4	RX-	Ethernet Receive Low

PIN	DESCRIPTION
1	+24 VDC (NODE & INPUTS)
2	NC
3	GND
4	+24 VDC (OUTPUTS)

Technical characteristics

	Model	5725.32T.EI
	Specifications	The EtherNet/IP Specification
	Case	Reinforced technopolymer
Power supply	Power supply connection	M12 4P male connector (IEC 60947-5-2)
	Power supply voltage	+24 VDC +/- 10%
	Node consumption (without inputs)	400 mA
	Power supply diagnosis	Green LED PWR / Green LED OUT
Outputs	PNP equivalent outputs	+24 VDC +/- 10%
	Maximum current for each output	100 mA
	Maximum output number	32
	Max output simultaneously actuated	32
Network	Network connectors	2 M12 4P female connectors Type D (IEC 61076-2-101)
	Baud rate	100 Mbit/s
	Addresses, possible numbers	As an IP address
	Max nodes in net	As an Ethernet Network
	Maximum distance between 2 nodes	100 m
	Bus diagnosis	1 green and 1 red LED for status + 4 LEDs for link & activity
	Configuration file	Available from our web site: http://www.pneumaxspa.com
	IP protection grade	IP65 when assembled
	Temperature range	From 0° to +50° C

2

General :

Powerlink module is directly integrated on 2700 solenoid valves manifold via a 37 poles connector, normally used for multipolar cable connection.
2700 series solenoid valves connected to node must be PNP equivalent (final 02 in ordering code).
The node can be easily installed also on solenoid valves manifold already mounted on equipment.
Module can manage up to 32 solenoid valves, and, in the same time, a max number of 8 Input modules 5225.08T or a max number of 8 Input modules 5225.12T.
The Powerlink module, regardless the number of Input module connected, reports to have connected 8 Input modules.
Regardless of the number of Input modules connected, the managable solenoid valves are 32.
Node power supply is made by a M12 4P male circular connector.
The separation between node 24 VDC Power supply and outputs 24 VDC allows to switch off the outputs maintaning powered the node and inputs, if present.
Connection to Bus Powerlink is possible via 2 M12 4P type D female circular connectors. These two connectors lead the signal to two different communication ports, so they are not connected in parallel.
The node address is assigned during configuration.

Ordering code

5725.32T.PL

Scheme / Overall dimensions and I/O layout :

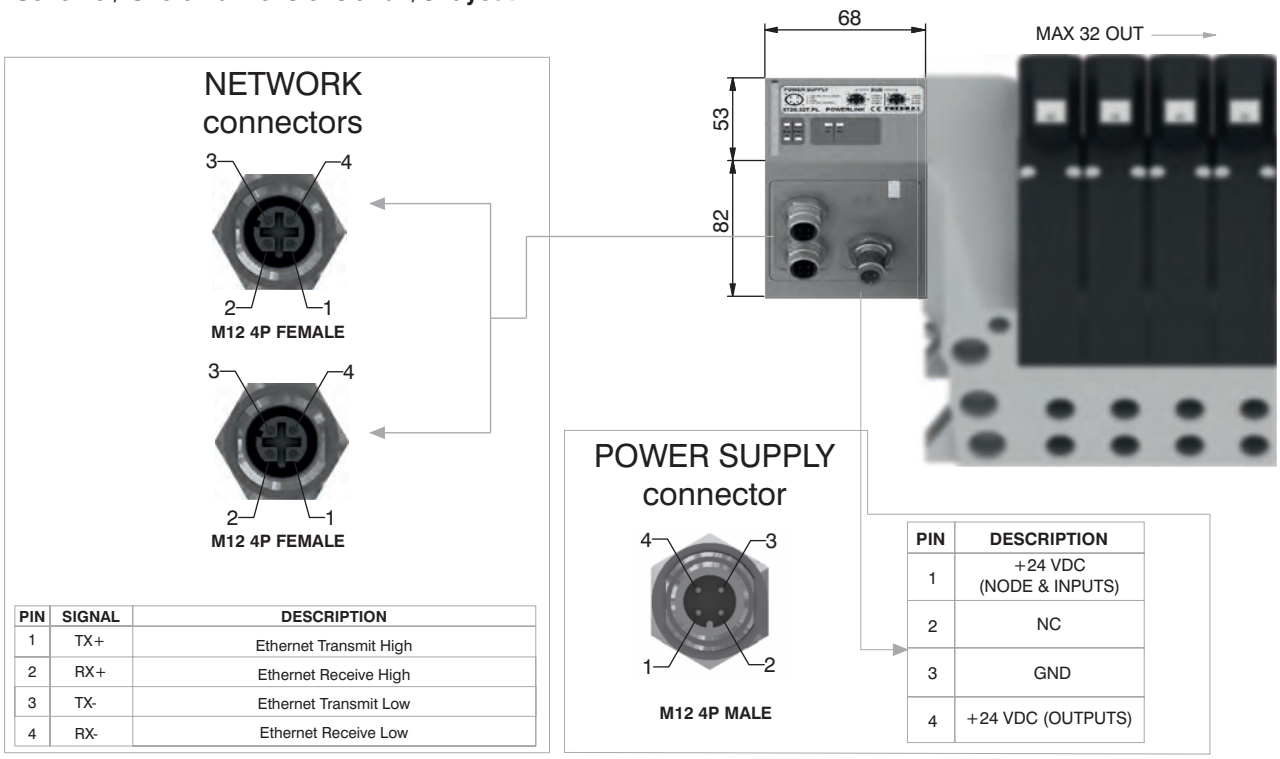

PIN	SIGNAL	DESCRIPTION
1	TX+	Ethernet Transmit High
2	RX+	Ethernet Receive High
3	TX-	Ethernet Transmit Low
4	RX-	Ethernet Receive Low

PIN	DESCRIPTION
1	+24 VDC (NODE & INPUTS)
2	NC
3	GND
4	+24 VDC (OUTPUTS)

Technical characteristics

	Model	5725.32T.PL
	Specifications	Ethernet POWERLINK Communication Profile Specifications
	Case	Reinforced technopolymer
Power supply	Power supply connection	M12 4P male connector (IEC 60947-5-2)
	Power supply voltage	+24 VDC +/- 10%
	Node consumption (without inputs)	400 mA
	Power supply diagnosis	Green LED PWR / Green LED OUT
Outputs	PNP equivalent outputs	+24 VDC +/- 10%
	Maximum current for each output	100 mA
	Maximum output number	32
	Max output simultaneously actuated	32
Network	Network connectors	2 M12 4P female connectors Type D (IEC 61076-2-101)
	Baud rate	100 Mbit/s
	Addresses, possible numbers	239
	Max nodes in net	240
	Maximum distance between 2 nodes	100 m
	Bus diagnosis	1 green and 1 red LED for status + 2 LEDs for link & activity
	Configuration file	Available from our web site: http://www.pneumaxspa.com
	IP protection grade	IP65 when assembled
	Temperature range	From 0° to +50° C

General :

Modbus/TCP module is directly integrated on 2700 solenoid valves manifold via a 37 poles connector, normally used for multipolar cable connection.
2700 series solenoid valves connected to node must be PNP equivalent (final 02 in ordering code).
The node can be easily installed also on solenoid valves manifold already mounted on equipment.
Module can manage up to 32 solenoid valves, and, in the same time, a max number of 8 Input modules 5225.08T or a max number of 8 Input modules 5225.12T.
The Modbus/TCP module, regardless the number of Input module connected, reports to have connected 8 Input modules.
Regardless of the number of Input modules connected, the managable solenoid valves are 32.
Node power supply is made by a M12 4P male circular connector.
The separation between node 24 VDC Power supply and outputs 24 VDC allows to switch off the outputs maintaning powered the node and inputs, if present.
Connection to Bus Modbus/TCP is possible via 2 M12 4P type D female circular connectors. These two connectors lead the signal to two different communication ports, so they are not connected in parallel.
The node address is assigned during configuration.

Ordering code

5725.32T.MT

Scheme / Overall dimensions and I/O layout :

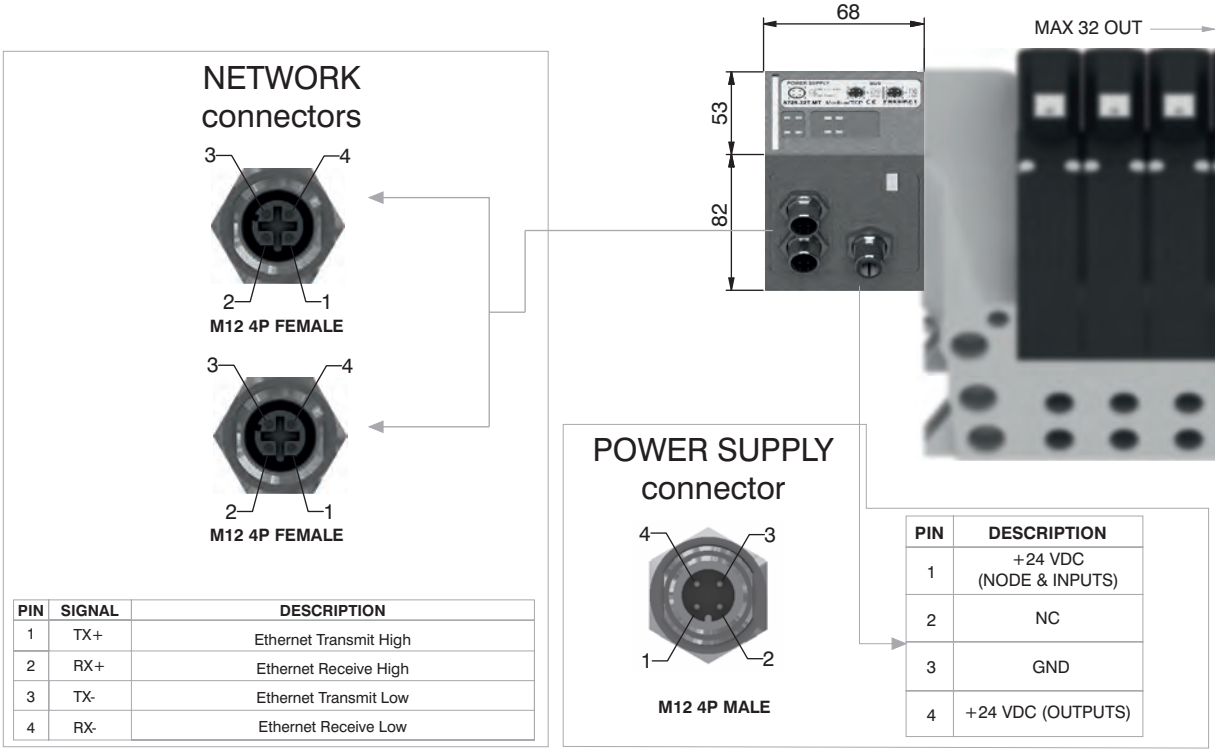

PIN	SIGNAL	DESCRIPTION
1	TX+	Ethernet Transmit High
2	RX+	Ethernet Receive High
3	TX-	Ethernet Transmit Low
4	RX-	Ethernet Receive Low

PIN	DESCRIPTION
1	+24 VDC (NODE & INPUTS)
2	NC
3	GND
4	+24 VDC (OUTPUTS)

Technical characteristics

	Model	5725.32T.MT
	Specifications	MODBUS Application Protocol Specification V1.1a, June 4, 2004
	Case	Reinforced technopolymer
Power supply	Power supply connection	M12 4P male connector (IEC 60947-5-2)
	Power supply voltage	+24 VDC +/- 10%
	Node consumption (without inputs)	400 mA
	Power supply diagnosis	Green LED PWR / Green LED OUT
Outputs	PNP equivalent outputs	+24 VDC +/- 10%
	Maximum current for each output	100 mA
	Maximum output number	32
	Max output simultaneously actuated	32
Network	Network connectors	2 M12 4P female connectors Type D (IEC 61076-2-101)
	Baud rate	100 Mbit/s
	Addresses, possible numbers	248
	Max nodes in net	248
	Maximum distance between 2 nodes	100 m
	Bus diagnosis	1 green and 1 red LED for status + 2 LEDs for link & activity
	Configuration file	Modbus/TCP nodes don't require configuration file
	IP protection grade	IP65 when assembled
	Temperature range	From 0° to +50° C

2

General :

Modules have 8 connectors M8 3P female.

The Inputs are PNP equivalent 24 VDC ±10%.
To each connector it is possible to plug both 2 wires Inputs (switches, magnetic switches pressure switches, etc) or 3 wires Inputs (proximity, photocells, electronic sensors, etc).
The maximum current available for all 8 Inputs is 300 mA.
Each module includes a 300 mA self-mending fuse. If a short circuit or a overcharge (overall current >300mA) occur the safety device acts cutting the 24 VDC power supply to all M8 connectors on the module and switching off the green led PWR. Any other Input module connected to the node will remain powered and will function correctly.
Once the cause of the fault disappears the green LED PWR lights up indicating the ON state and the node will re-start to operate.
The maximum number of Input modules supported is 4 for CANopen®, DeviceNet and EtherCAT®.
The maximum number of Input modules supported is 8 for PROFIBUS DP, PROFINET IO RT/IRT EtherNet/IP and Powerlink.

Ordering code

5225.08T

Scheme / Overall dimensions and I/O layout :

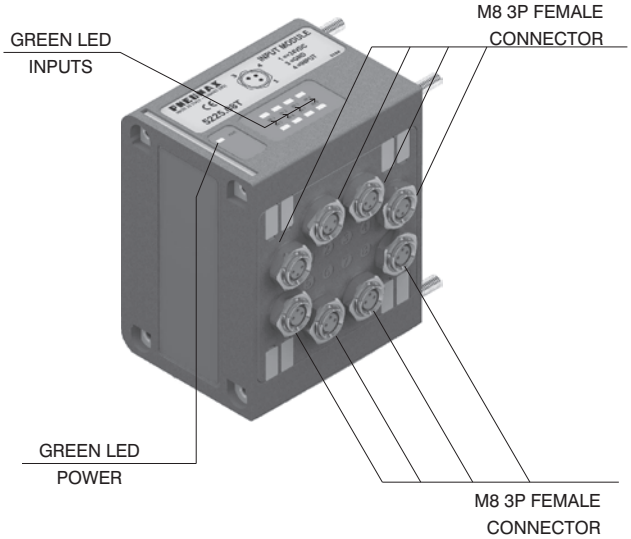

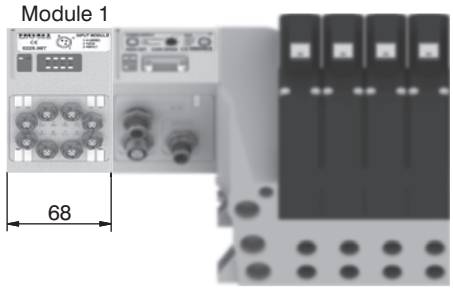

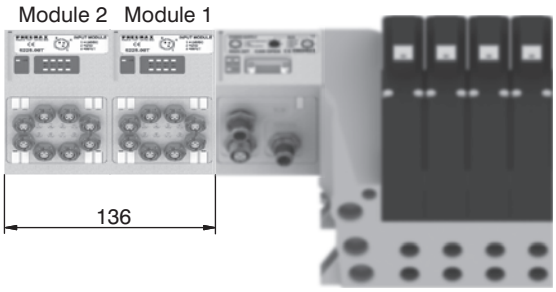

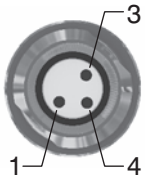

PIN	DESCRIPTION
1	+24 VDC
4	INPUT
3	GND

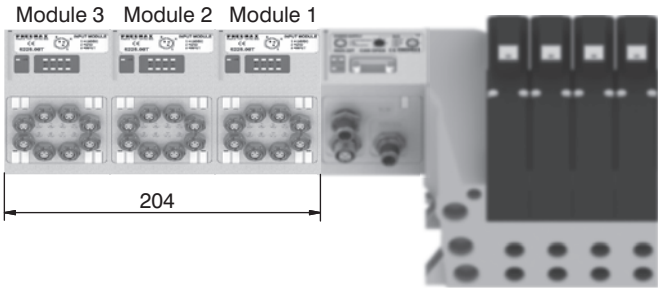

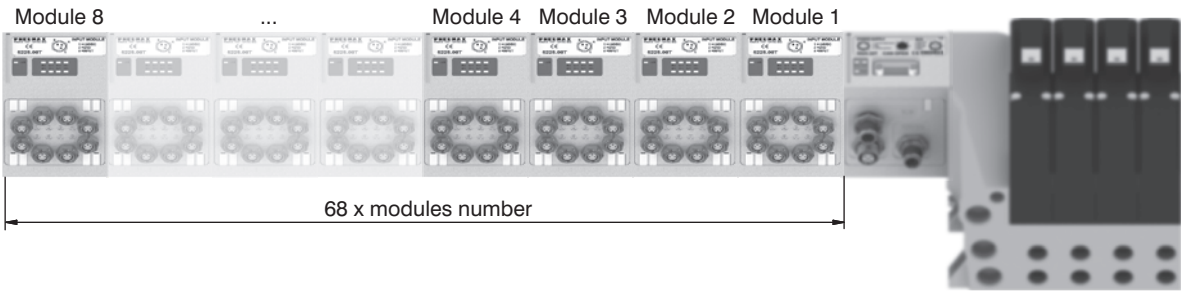

General :

Modules have 4 connectors M12 5P female.

The Inputs are PNP equivalent 24 VDC ±10%.
To each connector it is possible to plug both 2 wires Inputs (switches, magnetic switches pressure switches, etc) or 3 wires Inputs (proximity, photocells, electronic sensors, etc).
The maximum current available for all 8 Inputs is 300 mA.
Each module includes a 300 mA self-mending fuse. If a short circuit or a overcharge (overall current >300mA) occur the safety device acts cutting the 24 VDC power supply to all M8 connectors on the module and switching off the green led PWR. Any other Input module connected to the node will remain powered and will function correctly.
Once the cause of the fault disappears the green LED PWR lights up indicating the ON state and the node will re-start to operate.
The maximum number of Input modules supported is 4 for CANopen®, DeviceNet and EtherCAT®.
The maximum number of Input modules supported is 8 for PROFIBUS DP, PROFINET IO RT/IRT EtherNet/IP and Powerlink.

Ordering code

5225.12T

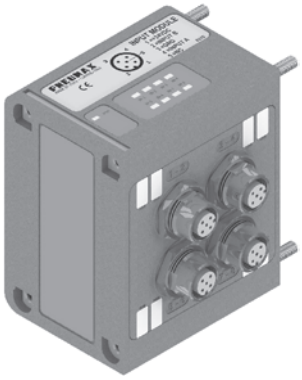

Scheme / Overall dimensions and I/O layout :

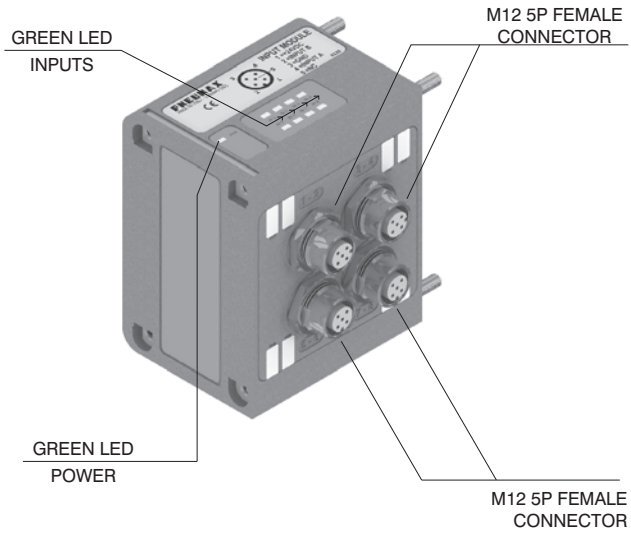

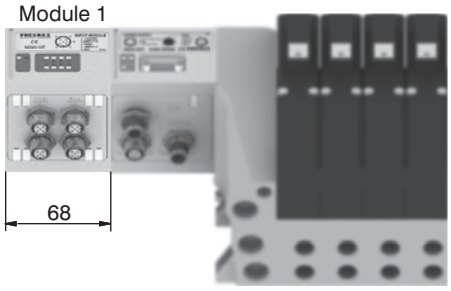

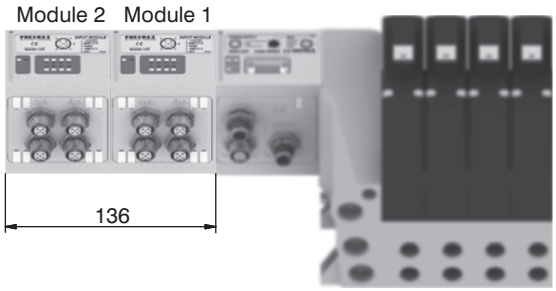

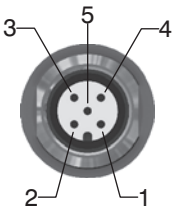

PIN	DESCRIPTION
1	+24 VDC
2	INPUT B
3	GND
4	INPUT A
5	NC

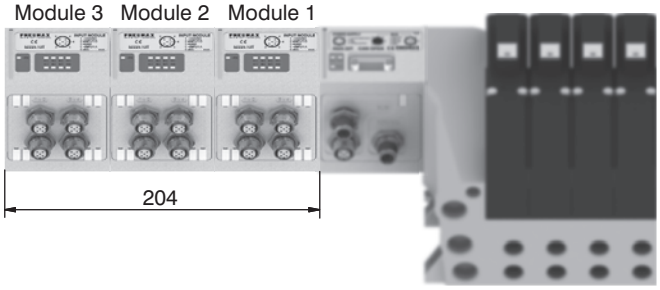

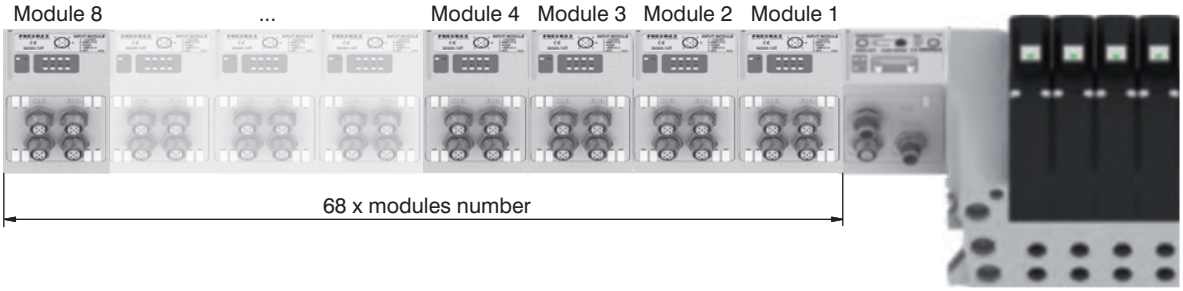

2

General :

This module is fitted with two M8 3 pin female connectors.

With this module is possible to read two analogue inputs (voltage or current).
The inputs are sampled at 12 bit.
For practicality the sampled value is transmitted with 16 bit, of which the four less significant are fixed at zero.

Available models:
5225.2T.00T (voltage signal 0 - 10V);
5225.2T.01T (voltage signal 0 - 5V);
5225.2C.00T (current signal 4 - 20mA);
5225.2C.01T (current signal 0 - 20mA).

Each module includes a 300 mA self-mending fuse. Should a short circuit or a overcharge (overall current >300mA) occur the safety device intervenes cutting the 24VDC power supply to all M8 connectors on the module and switching off the green LED PWR. Any other Input module connected to the node will remain powered and will function correctly. Once the cause of the fault is removed the green LED lights up indicating the ON state and the node will re-start to operate.

This module is counted as four 8 digital Inputs modules.

The Maximum number of 2 analogue Inputs modules supported is 1 for CANopen®, DeviceNet, PROFIBUS DP and EtherCAT®.
The Maximum number of 2 analogue Inputs modules supported is 2 for PROFINET IO RT/IRT, EtherNet/IP and Powerlink.

Ordering code

5225.2 _ . _T

Scheme / Overall dimensions and I/O layout :

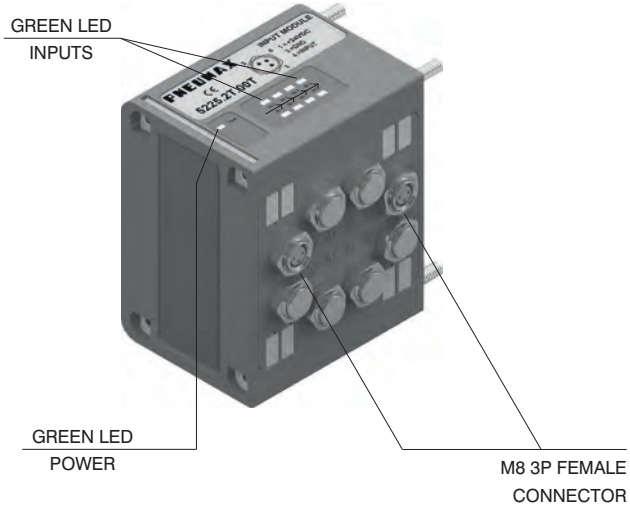

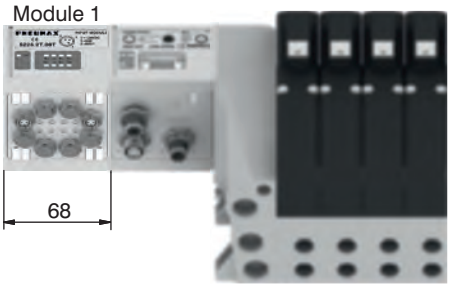

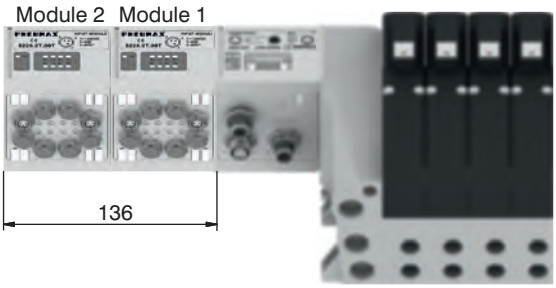

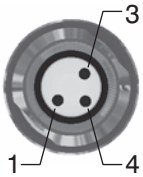

PIN	DESCRIPTION
1	+24 VDC
4	INPUT
3	GND

General :

This module is fitted with two M8 3 pin female connectors.

With this module is possible to read two Pt100 probes.
The inputs are sampled at 12 bit.
For practicality the sampled value is transmitted with 16 bit, of which the four less significant are fixed at zero.

It is possible to plug 3-wires probes or 2-wires probes.
The temperature is expressed in tenths of degree.
The temperature range is 0 – 250°C, beyond which the green LED for probe presence doesn't light on.
The module returns a value correspondent to 250°C when the probe is not connected.

Available models:
5225.2P.00T (2-wires probes);
5225.2P.01T (3-wires probes).

Each module includes a 300 mA self-mending fuse. Should a short circuit or a overcharge (overall current >300mA) occur the safety device intervenes cutting the 24VDC power supply to all M8 connectors on the module and switching off the green LED PWR. Any other Input module connected to the node will remain powered and will function correctly.
Once the cause of the fault is removed the green LED lights up indicating the ON state and the node will re-start to operate.
This module is counted as four 8 digital Inputs modules.

The Maximum number of 2 Pt100 Inputs modules supported is 1 for CANopen®, DeviceNet, PROFIBUS DP and EtherCAT®.
The Maximum number of 2 Pt100 Inputs modules supported is 2 for PROFINET IO RT/IRT, EtherNet/IP and Powerlink.

Ordering code

5225.2P . 0_T

Scheme / Overall dimensions and I/O layout :

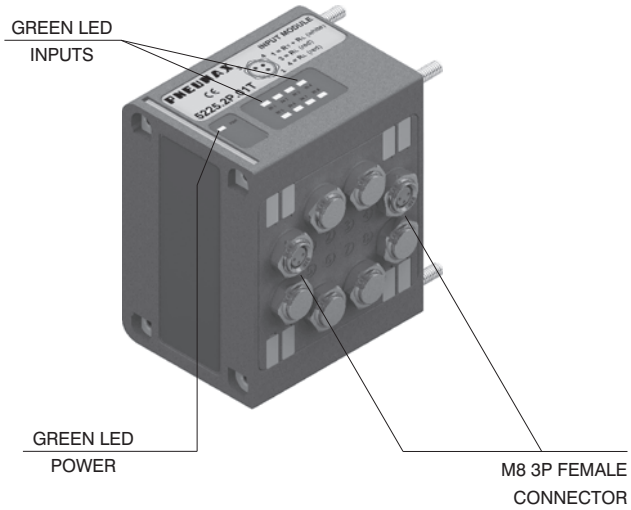

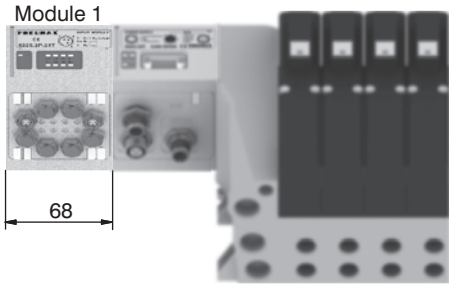

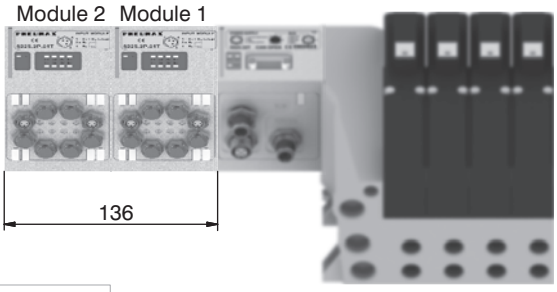

3 WIRES

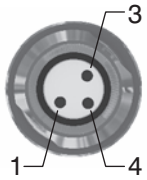

PIN	DESCRIPTION
1	RT (white)
4	RL (red)
3	RL (red)

2 WIRES

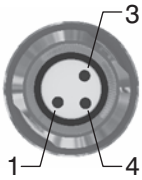

PIN	DESCRIPTION
1	RT (white)
4	NC
3	RL (red)

2

General :

This module is fitted with two M8 3 pin female connectors.

With this module is possible to read two Pt100 probes.
The inputs are sampled at 12 bit.
For practicality the sampled value is transmitted with 16 bit, of which the four less significant are fixed at zero.

It is possible to plug 3-wires probes or 2-wires probes.
The temperature is expressed in points according to the formula

$$\text{Temperature} = \left(\frac{\text{Points}}{4095} \times 600\right) - 200$$

The temperature range is -200 to +400°C, beyond which the green LED for probe presence doesn't light on.
The module returns a value correspondent to 400°C when the probe is not connected.

Available models:
5225.2P.10T (2-wires probes);
5225.2P.11T (3-wires probes).

Each module includes a 300 mA self-mending fuse. Should a short circuit or a overcharge (overall current >300mA) occur the safety device intervenes cutting the 24VDC power supply to all M8 connectors on the module and switching off the green LED PWR. Any other INPUT module connected to the node will remain powered and will function correctly.
Once the cause of the fault is removed the green LED lights up indicating the ON state and the node will re-start to operate.
This module is counted as four 8 digital Inputs modules.

The Maximum number of 2 Pt100 Inputs modules supported is 1 for CANopen®, DeviceNet, PROFIBUS DP and EtherCAT®.
The Maximum number of 2 Pt100 Inputs modules supported is 2 for PROFINET IO RT/IRT, EtherNet/IP and Powerlink.

Ordering code

5225.2P . 1_T

Scheme / Overall dimensions and I/O layout :

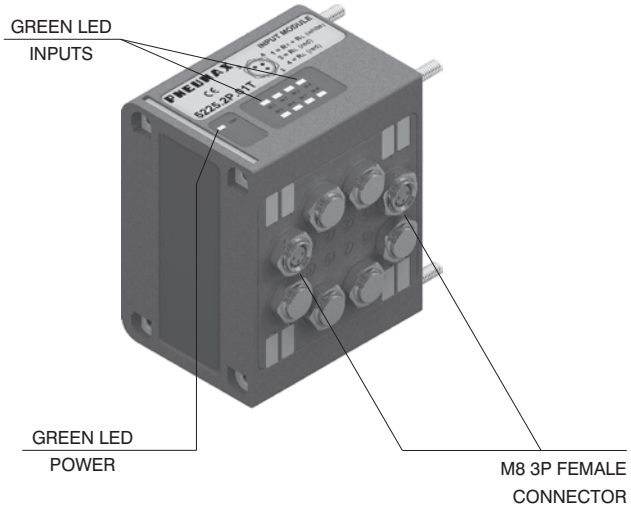

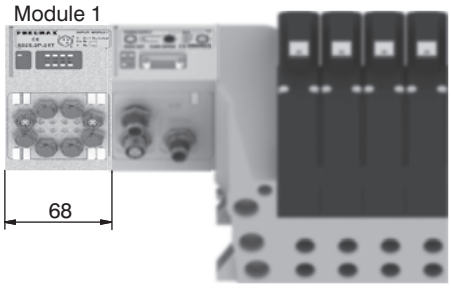

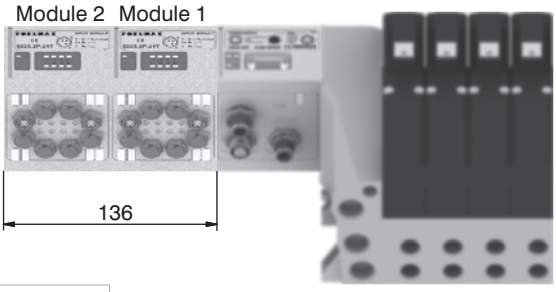

3 WIRES

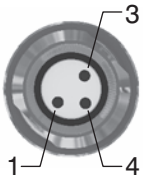

PIN	DESCRIPTION
1	RT (white)
4	RL (red)
3	RL (red)

2 WIRES

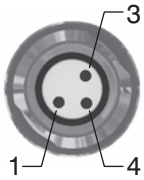

PIN	DESCRIPTION
1	RT (white)
4	NC
3	RL (red)

M12A 4P female Socket

Ordering code

5312A.F04.00

Power supply straight connector.

Upper view Slave connector

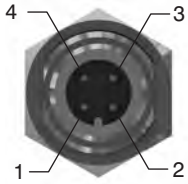

PIN	DESCRIPTION
1	+24 VDC Node
2	
3	0 V
4	+24 VDC Output

M8 3P male Plug

Ordering code

5308A.M03.00

Input straight connector.

Upper view Slave connector

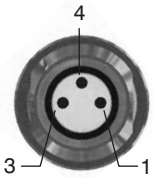

PIN	DESCRIPTION
1	+24 VDC
4	INPUT
3	GND

M12A 5P female Socket

Ordering code

5312A.F05.00

Network straight connector: for Bus CANOpen®, DeviceNet.

Upper view Slave connector

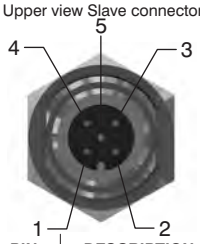

PIN	DESCRIPTION
1	(CAN_SHIELD)
2	(CAN_V+)
3	CAN_GND
4	CAN_H
5	CAN_L

M12A 5P male Plug

Ordering code

5312A.M05.00

Network straight connector: for BUS CANOpen®, DeviceNet.

Upper view Slave connector

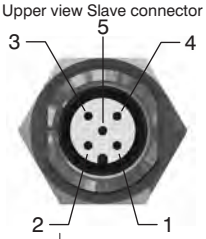

PIN	DESCRIPTION
1	(CAN_SHIELD)
2	(CAN_V+)
3	CAN_GND
4	CAN_H
5	CAN_L

M12B 5P female Plug

Ordering code

5312B.F05.00

Network straight connector: for Bus PROFIBUS DP.

Upper view Slave connector

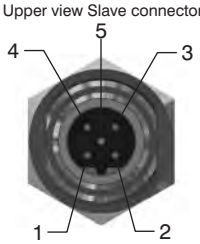

PIN	DESCRIPTION
1	Power Supply
2	A-line
3	DGND
4	B-line
5	SHIELD

M12B 5P male Plug

Ordering code

5312B.M05.00

Network straight connector: for BUS PROFIBUS DP.

Upper view Slave connector

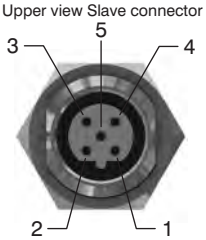

PIN	DESCRIPTION
1	Power Supply
2	A-line
3	DGND
4	B-line
5	SHIELD

M12D 4P male Plug

Ordering code

5312D.M04.00

Network straight connector: for EtherCAT®, PROFINET IO RT/IRT, EtherNet/Ip, Powerlink.and Modbus/TCP

Upper view Slave connector

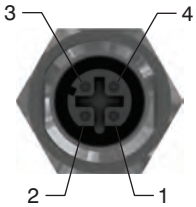

PIN	SIGNAL	DESCRIPTION
1	TX+	Ethernet Transmit High
2	RX+	Ethernet Receive High
3	TX-	Ethernet Transmit Low
4	RX-	Ethernet Receive Low

M12 5P male Plug

Ordering code

5312A.M05.00

Input straight connector.

Upper view Slave connector

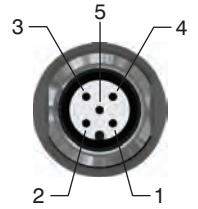

PIN	DESCRIPTION
1	+24 VDC
2	INPUT B
3	GND
4	INPUT A
5	NC

M12 Plug

Ordering code

5300.T12

M8 Plug

Ordering code

5300.T08

Trademarks: EtherCAT® is registered trademark and patented technology, licensed by Beckhoff Automation GmbH, Germany.

Manifold Layout configuration

32 OUT VERSION

C3 = CANopen® 32OUT
D3 = DeviceNet 32OUT
P3 = PROFIBUS 32OUT
A3 = EtherCAT® 32OUT (5700 Series)
I3 = EtherNet / IP 32OUT
N3 = PROFINET IO RT/IRT 32OUT
L3 = Powerlink 32OUT
M3 = Modbus/TCP 32OUT

INPUT MODULES

A = No module
D1= 8 M8 digital inputs module
D2= 8 M12 digital inputs module
T1= 2 analogue inputs 0-5V module
T2= 2 analogue inputs 0-10V module
C1= 2 analogue inputs 0-20mA module
C2= 2 analogue inputs 4-20mA module
P1= 2 Pt100 inputs 2 wires module
P2= 2 Pt100 inputs 3 wires module
E1= 2 Pt100 inputs 2 wires module extended range
E2= 2 Pt100 inputs 3 wires module extended range

RIGHT ENDPLATE

U0 = Closed
U2 = 25 Poles

I/O MODULE

M8
(Requires 25 poles right endplate)

MODUL CONFIGURATION

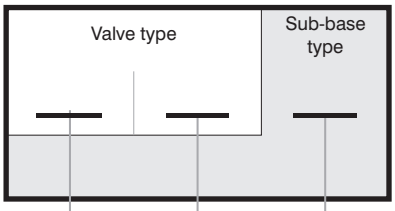

ACCESSORIES CONFIGURATION

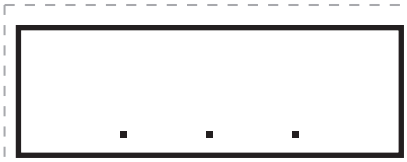

SUB-BASE TYPE

1 = Base type 1 for Monostable (1 electrical signal occupied)
2 = Base type 2 for Bistable (2 electrical signals occupied)

ACCESSORIES

X = Diaphragm plug on pipe 1
Y = Diaphragm plug on pipe 3
Z = Diaphragm plug on pipe 5
XY = Diaphragm plug on pipe 1 & 3
ZX = Diaphragm plug on pipe 5 & 1
ZY = Diaphragm plug on pipe 5 & 3
ZXY = Diaphragm plug on pipe 5, 1 & 3

VALVE TYPE:

A = Self-feeding
E = External feeding

SHORT CODE FUNCTION / CONNECTION :

A= 5/2 SOLENOID - SPRING
B= 5/2 SOLENOIS - DIFFERENTIAL
C= 5/2 SOLENOID - SOLENOID
E= 5/3 CC SOLENOID -SOLENOID
F= 2x3/2 NC-NC (= 5/3 OC) SOLENOID -SOLENOID
G= 2x3/2 NO-NO (= 5/3 PC) SOLENOID -SOLENOID
H= 2x3/2 NC-NO SOLENOID -SOLENOID
I= 2x3/2 NO-NC SOLENOID -SOLENOID
T= FREE VALVE SPACE PLUG

NOTE:
While configuring the manifold always be careful that the maximum number of electrical signals available is 32.
The use of monostable valve mounted on a base type 2 (2 electrical signals occupied) causes the loss of one electric signal. In this case the monostable valve can be replaced by a bistable valve. The diaphragms plugs are used to intercept the conduits 1,3 & 5 of the base. If it is necessary to interrupt more than one conduit in the same time then put in line the letters which identifies the position (for exemple : regarding the 3 & 5 conduits, put the Y & Z letters).
Should one or more conduits be cut more than one time it is necessary to add the relevant intermediate Supply/Exhaust module.

General

Technical innovation, rational design, high performance and extremely compact size: these are the main features the ENOVA® series bring to the market. The ENOVA® series is the latest in a string of achievements made by the Pneumax Spa R&D Department in the last few years.
The ENOVA® series has been developed according to the latest market requirements. Each valve comprises all the necessary pneumatic and electrical functions needed to produce a solenoid valve assembly. There are no limits to the configuration of the solenoid valve island, as full priority has been given to the end user's needs; the addition or removal of modules is a simple operation that can be swiftly and easily achieved.
The management of the electrical signals through the valves is optimized through a patented dedicated connector in each valve.
Electrical connections are made via a twenty-five pin connector, which is capable of controlling up to twenty-two solenoids. Electrical and pneumatic connections are located on the same module at one end of the assembly. Serial bus nodes compatible with most common protocols are easily integrated.
Most widely used and known communication protocols, such as Profibus, Can-Open, Device-Net can be directly integrated with the valve manifold by simply plugging the necessary module onto the electrical connection, maintaining IP65 environmental protection. All electrical and pneumatic connections are positioned on one face of the assembly, simplifying system design, installation and commission. The management of inputs has also been foreseen, and can be achieved by adding one or more expansion modules directly to the serial module.

"Shifting time of pneumatic directional control valves or moving parts, logic devices were measured in accordance to ISO 12238:2001, Pneumatic fluid power-Directional control valves-Measurement of shifting time"

MAIN CHARACTERISTICS :
- Clean profile prevents accumulation of dirt
- Compact size: modules of 12.5 mm
- Connections available: 4 , 6 , 8 mm
- IP65 protection grade
- Optimized electrical connection system
- Electrical and pneumatic line connections on one side
- Quick coupling connection system with visual indicator: locked/unlocked
- Freedom of configuration

AVAILABLE CONFIGURATIONS:
- 5/2 monostable
- 5/2 bistable
- 5/3 closed centres
- 2x3/2 NC/NC (5/3 open centres)
- 2x3/2 NO/NO (5/3 pressured centres)
- 2x3/2 NC/NO
- 2x2/2 NC/NC
- 2x2/2 NO/NO
- 2x2/2 NC/NO

Construction

Central body	Reinforced Technopolymer
Operators	Reinforced Technopolymer
External casing	Reinforced Technopolymer
Spool	Aluminium 2011
Spool seals	PUR
Piston seals	Oil resistant nitrile rubber - NBR
Spring	Spring steel with protective coating

Technical characteristics

Voltage	24 VDC ± 10% PNP (NPN on request)
Pilot consuption	0,9 Watt
Valve working pressure (1-11)	from vacuum to 10 bar max.
Pilot working pressure (12-14)	from 2,5 to 7 bar max.
Operating temperature	-5°C +50°C
Protection degree	IP 65
Life (standard operating conditions)	50.000.000
Fluid	Filtered and lubricated air or no (if lubricated air, the lubrication must be continuous)

"**Attention:** dry air must be used for applications below 0°C"

Solenoid - Differential (Monostable)

5/2

Ordering code

23ⒺⒸ.52.00.36.Ⓥ

Ⓔ	ELECTRICAL CONTACTS
	0=STANDARD-only one electric signal
	1=CEB (Bistable Electrical contacts)-(two electrical signals)
Ⓒ	ELECTRICAL CONTACTS
	4=Quick connection for tube Ø4
	6=Quick connection for tube Ø6
	8=Quick connection for tube Ø8
Ⓥ	VOLTAGE
	02=24 VDC PNP
	12=24 VDC NPN

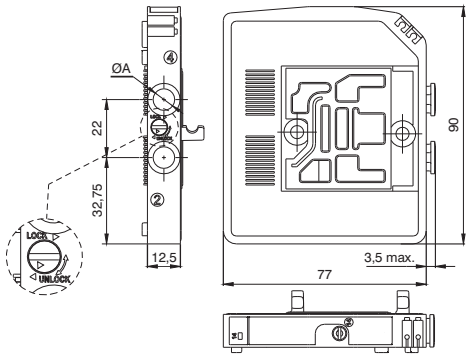

SHORT FUNCTION CODE B4
SHORT FUNCTION CODE B6
SHORT FUNCTION CODE B8
SHORT FUNCTION CODE R4 (CEB)

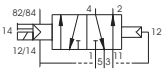

SHORT FUNCTION CODE R6 (CEB)
SHORT FUNCTION CODE R8 (CEB)
"Shifting time of pneumatic directional control valves or moving parts, logic devices were measured in accordance to ISO 12238:2001, Pneumatic fluid power - Directional control valves - Measurement of shifting time."

Operational characteristic

Fluid	Flow rate at 6 bar with Δp=1 (Nl/min)	Responce time according to ISO 12238, activation time (ms)	Responce time according to ISO 12238, deactivation time (ms)	Working pressure (bar)	Pressure range (bar)	Temperature °C	Weight (gr.)
Filtered air, with or without lubrication	700	12	15	From vacuum to 10	2,5 to 7	-5 ÷ +50	115

Solenoid - Spring (Monostable)

5/2

Ordering code

23ⒺⒸ.52.00.39.Ⓥ

Ⓔ	ELECTRICAL CONTACTS
	0=STANDARD-only one electric signal
	1=CEB (Bistable Electrical contacts)-(two electrical signals)
Ⓒ	ELECTRICAL CONTACTS
	4=Quick connection for tube Ø4
	6=Quick connection for tube Ø6
	8=Quick connection for tube Ø8
Ⓥ	VOLTAGE
	02=24 VDC PNP
	12=24 VDC NPN

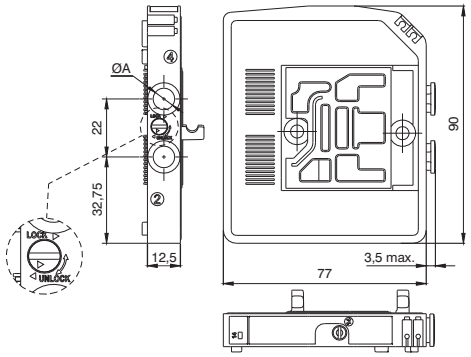

SHORT FUNCTION CODE A4
SHORT FUNCTION CODE A6
SHORT FUNCTION CODE A8
SHORT FUNCTION CODE P4 (CEB)

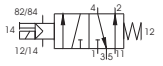

SHORT FUNCTION CODE P6 (CEB)
SHORT FUNCTION CODE P8 (CEB)
"Shifting time of pneumatic directional control valves or moving parts, logic devices were measured in accordance to ISO 12238:2001, Pneumatic fluid power - Directional control valves - Measurement of shifting time."

Operational characteristic

Fluid	Flow rate at 6 bar with Δp=1 (Nl/min)	Responce time according to ISO 12238, activation time (ms)	Responce time according to ISO 12238, deactivation time (ms)	Working pressure (bar)	Pressure range (bar)	Temperature °C	Weight (gr.)
Filtered air, with or without lubrication	700	9	30	From vacuum to 10	2,5 to 7	-5 ÷ +50	115

Solenoid - Solenoid (Bistable)

5/2

Ordering code

230Ⓒ.52.00.35.Ⓥ

Ⓒ	ELECTRICAL CONTACTS
	4=Quick connection for tube Ø4
	6=Quick connection for tube Ø6
	8=Quick connection for tube Ø8
Ⓥ	VOLTAGE
	02=24 VDC PNP
	12=24 VDC NPN

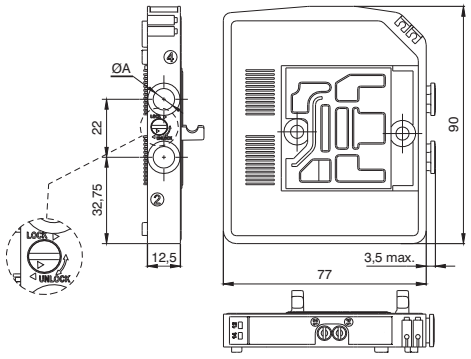

SHORT FUNCTION CODE C4
SHORT FUNCTION CODE C6
SHORT FUNCTION CODE C8

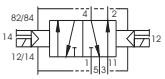

"Shifting time of pneumatic directional control valves or moving parts, logic devices were measured in accordance to ISO 12238:2001, Pneumatic fluid power - Directional control valves - Measurement of shifting time."

Operational characteristic

Fluid	Flow rate at 6 bar with Δp=1 (Nl/min)	Responce time according to ISO 12238, activation time (ms)	Responce time according to ISO 12238, deactivation time (ms)	Working pressure (bar)	Pressure range (bar)	Temperature °C	Weight (gr.)
Filtered air, with or without lubrication	700	7	7	From vacuum to 10	2,5 to 7	-5 ÷ +50	115

Solenoid - Solenoid (Bistable-Closed centres)

5/3

Ordering code

230Ⓒ.53.31.35.Ⓥ

Ⓒ	ELECTRICAL CONTACTS
	4=Quick connection for tube Ø4
	6=Quick connection for tube Ø6
	8=Quick connection for tube Ø8
Ⓥ	VOLTAGE
	02=24 VDC PNP
	12=24 VDC NPN

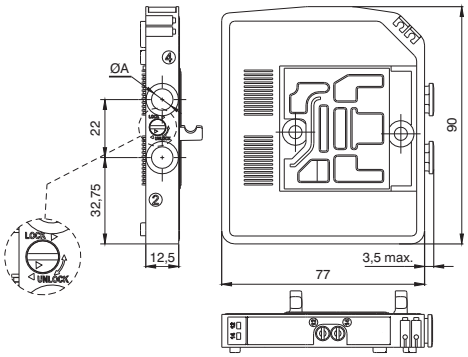

SHORT FUNCTION CODE E4
SHORT FUNCTION CODE E6
SHORT FUNCTION CODE E8

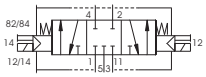

"Shifting time of pneumatic directional control valves or moving parts, logic devices were measured in accordance to ISO 12238:2001, Pneumatic fluid power - Directional control valves - Measurement of shifting time."

Operational characteristic

Fluid	Flow rate at 6 bar with Δp=1 (Nl/min)	Responce time according to ISO 12238, activation time (ms)	Responce time according to ISO 12238, deactivation time (ms)	Working pressure (bar)	Pressure range (bar)	Temperature °C	Weight (gr.)
Filtered air, with or without lubrication	550	15	15	From vacuum to 10	2,5 to 7	-5 ÷ +50	130

Solenoid - Solenoid 2x3/2 Bistable-Normally Closed-Normally Closed (=5/3 Open centres)

6/2

Ordering code

230Ⓒ.62.44.35.Ⓥ

Ⓒ	ELECTRICAL CONTACTS
	4=Quick connection for tube Ø4
	6=Quick connection for tube Ø6
	8=Quick connection for tube Ø8
Ⓥ	VOLTAGE
	02=24 VDC PNP
	12=24 VDC NPN

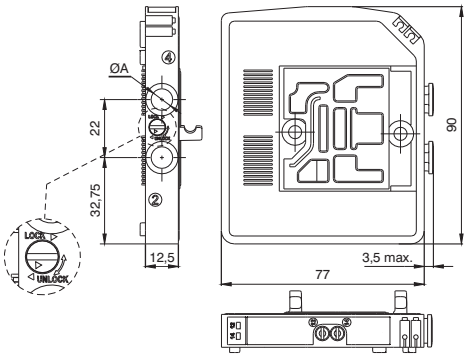

*5/3 Open Centres: Use the Solenoid valves with 2x3/2 NC-NC function
*5/3 Pressured Centres: Use the Solenoid valves with 2x3/2 NO-NO function
SHORT FUNCTION CODE F4
SHORT FUNCTION CODE F6

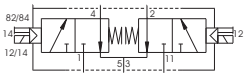

SHORT FUNCTION CODE F8

"Shifting time of pneumatic directional control valves or moving parts, logic devices were measured in accordance to ISO 12238:2001, Pneumatic fluid power - Directional control valves - Measurement of shifting time."

Operational characteristic

Fluid	Flow rate at 6 bar with Δp=1 (Nl/min)	Responce time according to ISO 12238, activation time (ms)	Responce time according to ISO 12238, deactivation time (ms)	Working pressure (bar)	Pressure range (bar)	Temperature °C	Weight (gr.)
Filtered air, with or without lubrication	700	9	30	From vacuum to 10	2,5 to 7	-5 ÷ +50	130

Solenoid - Solenoid 2x3/2 Bistable-Normally Closed-Normally Open

6/2

Ordering code

230Ⓒ.62.45.35.Ⓥ

Ⓒ	ELECTRICAL CONTACTS
	4=Quick connection for tube Ø4
	6=Quick connection for tube Ø6
	8=Quick connection for tube Ø8
Ⓥ	VOLTAGE
	02=24 VDC PNP
	12=24 VDC NPN

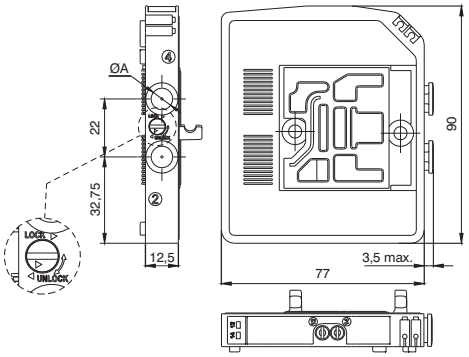

*5/3 Open Centres: Use the Solenoid valves with 2x3/2 NC-NC function
*5/3 Pressured Centres: Use the Solenoid valves with 2x3/2 NO-NO function
SHORT FUNCTION CODE H4
SHORT FUNCTION CODE H6ì

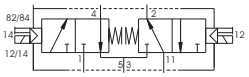

SHORT FUNCTION CODE H8

"Shifting time of pneumatic directional control valves or moving parts, logic devices were measured in accordance to ISO 12238:2001, Pneumatic fluid power - Directional control valves - Measurement of shifting time."

Operational characteristic

Fluid	Flow rate at 6 bar with Δp=1 (Nl/min)	Responce time according to ISO 12238, activation time (ms)	Responce time according to ISO 12238, deactivation time (ms)	Working pressure (bar)	Pressure range (bar)	Temperature °C	Weight (gr.)
Filtered air, with or without lubrication	700	9	30	From vacuum to 10	2,5 to 7	-5 ÷ +50	130

Solenoid - Solenoid 2x3/2 Bistable-Normally Open-Normally Open (=5/3 Pressured centres)

6/2

Ordering code

230Ⓒ.62.55.35.Ⓥ

Ⓒ	ELECTRICAL CONTACTS
	4=Quick connection for tube Ø4
	6=Quick connection for tube Ø6
	8=Quick connection for tube Ø8
Ⓥ	VOLTAGE
	02=24 VDC PNP
	12=24 VDC NPN

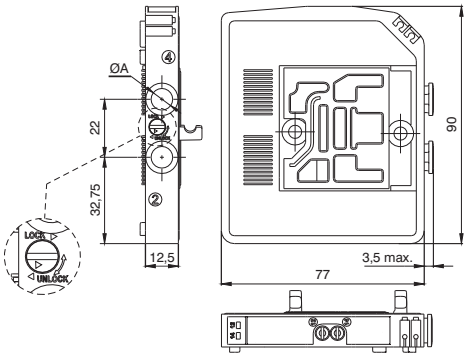

*5/3 Open Centres: Use the Solenoid valves with 2x3/2 NC-NC function
*5/3 Pressured Centres: Use the Solenoid valves with 2x3/2 NO-NO function
SHORT FUNCTION CODE G4
SHORT FUNCTION CODE G6

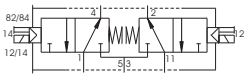

SHORT FUNCTION CODE G8

"Shifting time of pneumatic directional control valves or moving parts, logic devices were measured in accordance to ISO 12238:2001, Pneumatic fluid power - Directional control valves - Measurement of shifting time."

Operational characteristic

Fluid	Flow rate at 6 bar with Δp=1 (Nl/min)	Responce time according to ISO 12238, activation time (ms)	Responce time according to ISO 12238, deactivation time (ms)	Working pressure (bar)	Pressure range (bar)	Temperature °C	Weight (gr.)
Filtered air, with or without lubrication	700	9	30	From vacuum to 10	2,5 to 7	-5 ÷ +50	130

Solenoid - Solenoid 2x2/2 Bistable-Normally Closed-Normally Closed

4/2

Ordering code

230Ⓒ.42.44.35.Ⓥ

Ⓒ	ELECTRICAL CONTACTS
	4=Quick connection for tube Ø4
	6=Quick connection for tube Ø6
	8=Quick connection for tube Ø8
Ⓥ	VOLTAGE
	02=24 VDC PNP
	12=24 VDC NPN

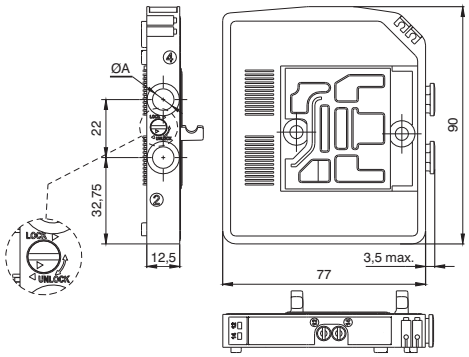

SHORT FUNCTION CODE L4
SHORT FUNCTION CODE L6
SHORT FUNCTION CODE L8

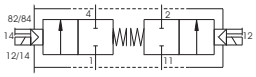

"Shifting time of pneumatic directional control valves or moving parts, logic devices were measured in accordance to ISO 12238:2001, Pneumatic fluid power - Directional control valves - Measurement of shifting time."

Operational characteristic

Fluid	Flow rate at 6 bar with Δp=1 (Nl/min)	Responce time according to ISO 12238, activation time (ms)	Responce time according to ISO 12238, deactivation time (ms)	Working pressure (bar)	Pressure range (bar)	Temperature °C	Weight (gr.)
Filtered air, with or without lubrication	700	9	30	From vacuum to 10	2,5 to 7	-5 ÷ +50	130

Solenoid - Solenoid 2x2/2 Bistable-Normally Closed-Normally Open

4/2

Ordering code

230Ⓒ.42.45.35.Ⓥ

Ⓒ	ELECTRICAL CONTACTS
	4=Quick connection for tube Ø4
	6=Quick connection for tube Ø6
	8=Quick connection for tube Ø8
Ⓥ	VOLTAGE
	02=24 VDC PNP
	12=24 VDC NPN

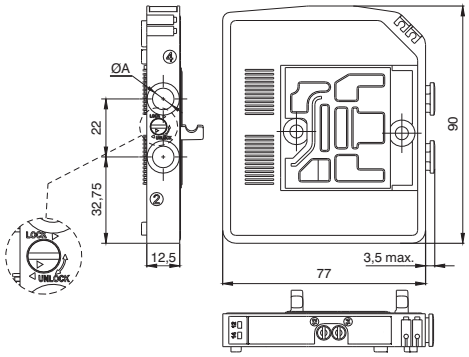

SHORT FUNCTION CODE N4
SHORT FUNCTION CODE N6
SHORT FUNCTION CODE N8

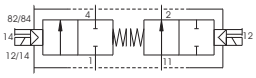

"Shifting time of pneumatic directional control valves or moving parts, logic devices were measured in accordance to ISO 12238:2001, Pneumatic fluid power - Directional control valves - Measurement of shifting time."

Operational characteristic

Fluid	Flow rate at 6 bar with Δp=1 (Nl/min)	Responce time according to ISO 12238, activation time (ms)	Responce time according to ISO 12238, deactivation time (ms)	Working pressure (bar)	Pressure range (bar)	Temperature °C	Weight (gr.)
Filtered air, with or without lubrication	700	9	30	From vacuum to 10	2,5 to 7	-5 ÷ +50	130

Solenoid - Solenoid 2x2/2 Bistable-Normally Open-Normally Open

4/2

Ordering code

230Ⓒ.42.55.35.Ⓥ

Ⓒ	ELECTRICAL CONTACTS
	4=Quick connection for tube Ø4
	6=Quick connection for tube Ø6
	8=Quick connection for tube Ø8
Ⓥ	VOLTAGE
	02=24 VDC PNP
	12=24 VDC NPN

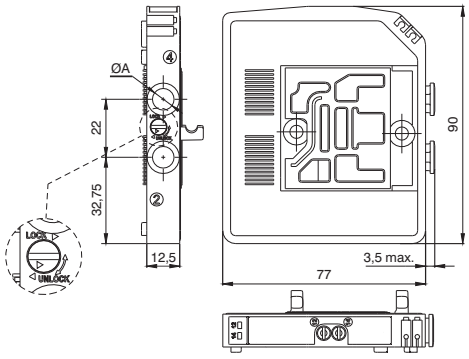

SHORT FUNCTION CODE M4
SHORT FUNCTION CODE M6
SHORT FUNCTION CODE M8

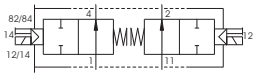

"Shifting time of pneumatic directional control valves or moving parts, logic devices were measured in accordance to ISO 12238:2001, Pneumatic fluid power - Directional control valves - Measurement of shifting time."

Operational characteristic

Fluid	Flow rate at 6 bar with Δp=1 (Nl/min)	Responce time according to ISO 12238, activation time (ms)	Responce time according to ISO 12238, deactivation time (ms)	Working pressure (bar)	Pressure range (bar)	Temperature °C	Weight (gr.)
Filtered air, with or without lubrication	700	9	30	From vacuum to 10	2,5 to 7	-5 ÷ +50	130

Endplates 5 ports

Ordering code	
2311.05Ⓒ	
Ⓒ	CONNECTIONS
	P=Electrical connection PNP
	N=Electrical connection NPN

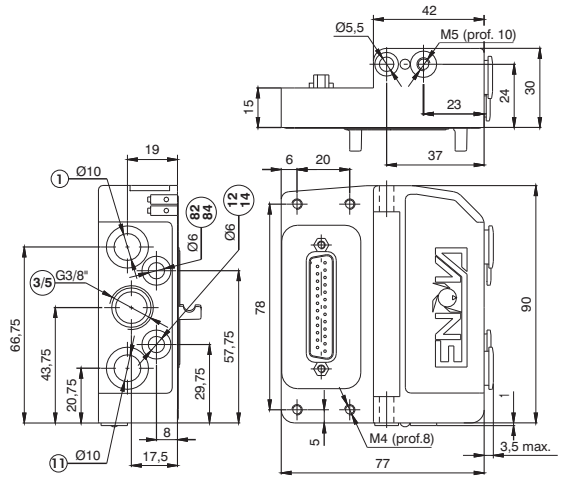

1/11 Conduit (tube ø10): Main Solenoid valve feeding (pressure from vacuum to 10 bar maximum)
3/5 Conduit (G 3/8"): Main Solenoid valve exhaust

12/14 Conduit (tube ø6): Pilot feeding (pressure from 2,5 to 7 bar)
82/84 Conduit (tube ø6): Pilot exhaust

Operational characteristic	Fluid	Temperature °C	Working pressure (bar)	Pressure range (bar)	Weight (gr.)
	Filtered air, with or without lubrication	-5 ÷ +50	From vacuum to 10	2,5 to 7	190

Endplates 3 ports

Ordering code	
2311.03Ⓒ	
Ⓒ	CONNECTIONS
	P=Electrical connection PNP
	N=Electrical connection NPN

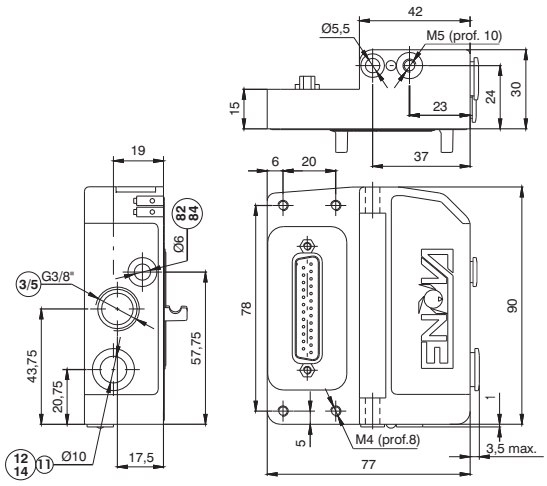

1/11-12/14 Conduit (tube ø10): Main Solenoid valve and pilot feeding (pressure from 2,5bar to 7 bar)
3/5 Conduit (G 3/8"): Main Solenoid valve exhaust
82/84 Conduit (tube ø6): Pilot exhaust

Operational characteristic	Fluid	Temperature °C	Working pressure (bar)	Pressure range (bar)	Weight (gr.)
	Filtered air, with or without lubrication	-5 ÷ +50	From vacuum to 10	2,5 to 7	185

Right Endplates closed

Ordering code
2312.00

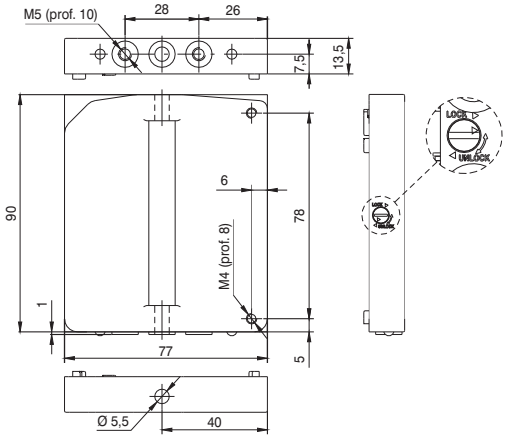

Weight gr. 100

2

Intermediate Inlet/Exhaust module

Ordering code
2308.F

	FUNCTION
F	08=Exhaust module
	12=Inlet module
	20=Inlet-Exhaust module

SHORT FUNCTION CODE J
SHORT FUNCTION CODE K
SHORT FUNCTION CODE W

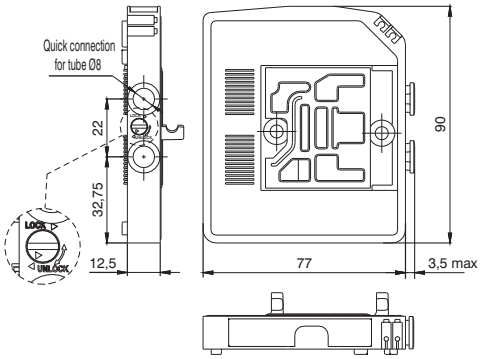

Operational characteristic	Fluid	Temperature °C	Weight (gr.)
	Filtered air, with or without lubrication	-5 ÷ +50	90

Through module

Ordering code
2300.F

	FUNCTION
F	01=1 electric signal module
	02=2 electric signals module

SHORT FUNCTION CODE T1
SHORT FUNCTION CODE T2

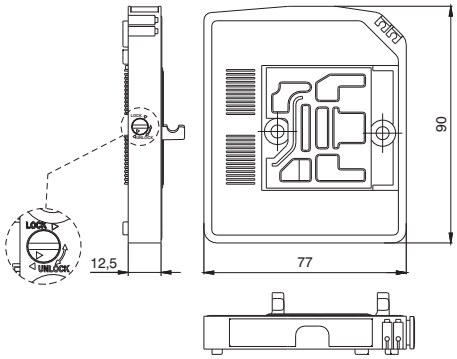

Operational characteristic	Fluid	Temperature °C	Weight (gr.)
	Filtered air, with or without lubrication	-5 ÷ +50	90

DIN rail adapter

Ordering code
2300.16

Weight gr. 12

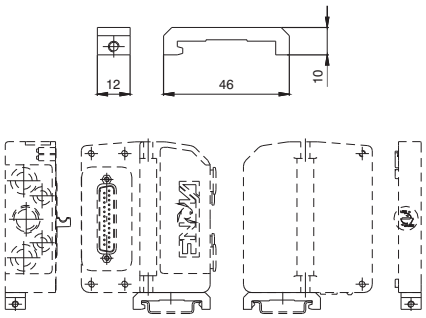

Fixing bracket

Ordering code
2300.50

Weight gr. 45
for fixing dimensions see the Left endplates 3 and 5 ports

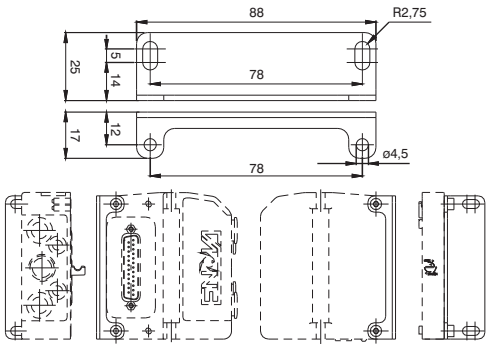

Exhaust Diaphragm

Ordering code
2317.08

Weight gr. 5
SHORT FUNCTION CODE Y

Inlet Diaphragm

Ordering code
2317.12

Weight gr. 5
SHORT FUNCTION CODE X

Inlet/Exhaust Diaphragm

Ordering code
2317.20

Weight gr. 5
SHORT FUNCTION CODE Z

Cable complete with connector, 25 Poles IP65

Ordering code
2300.25.L.C

L	CABLE LENGTH
	03=3 meters
	05=5 meters
	10=10 meters
C	CONNECTORS
	10=In line
	90=90° Angle

The electrical connection is achieved via a 25 pin connector and can manage up to 22 solenoid pilots.

The management and distribution of the electrical signals between each valve is obtained thanks to a patented electrical connector which receives the signals from the previous module, uses one, two or none depending on the type, and carries forward to the next module the remaining. Bistable valves, 5/3 ; 2X3/2 e 2X2/2 valves which have two solenoid pilots built in, use two signals; the first is directed to the pilot side 14 the second to the pilot side 12.
Mono-stable valves can be fitted with two type of electrical connector: one that uses only one signal (connected to the pilot side 14) and carries forward the remaining and one called CEB (Electrical contact for bistable) which uses two signals, one is needed for the valve the other is not used.
This second solution (CEB) allows the modification of the manifold (replacement of monostable valves with bistable for example) without the need of reconfiguring the PLC outputs layout. On the other hand this solution limits the maximum number of valves to 11 (two signals for each position).
Intermediate supply / exhaust modules are fitted with a dedicated electrical connector which carries forward all electric signals without using any. This allows the use of intermediate modules in any position of the manifold.

Example of manifold samples with the corresponding pin layout.

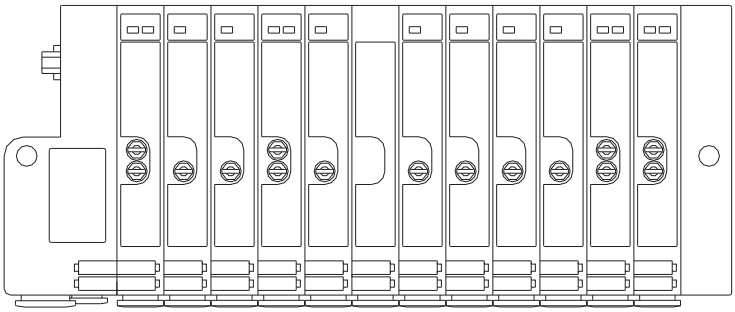

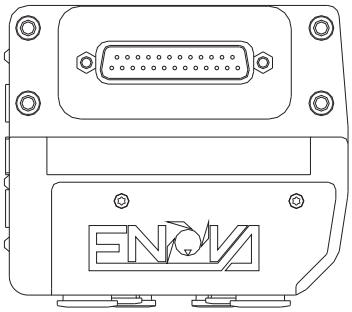

ELECTRIC CONNECTOR
SUB-D TYPE - 25 POLES

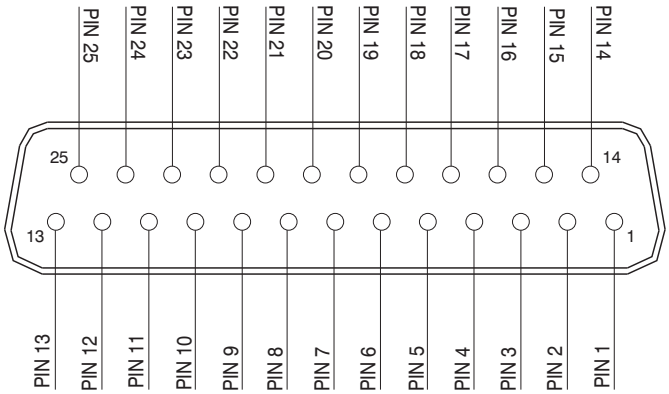

1 - 22 = Solenoid valves signals
23 - 24 - 25 = Common

25 PIN Connector correspondence for bistable, 2x3/2, 5/3 and standard monostable valves manifold

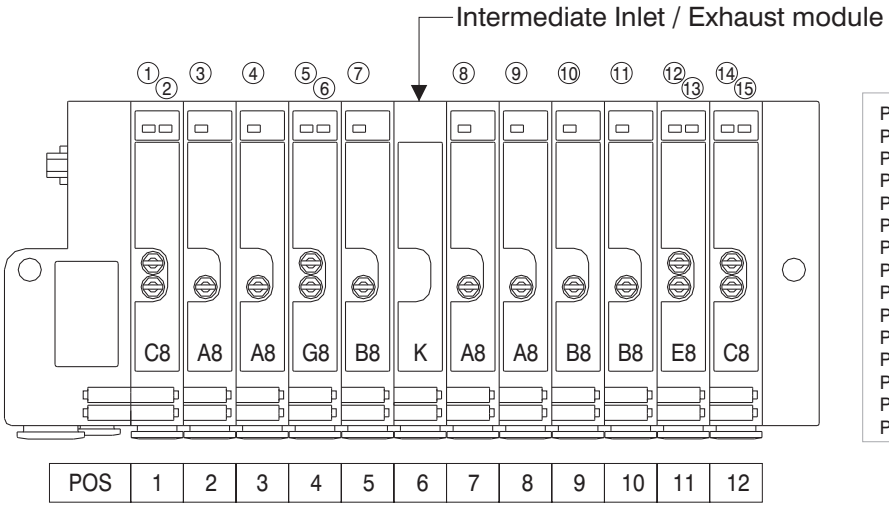

PIN 1 = PILOT 14 EV POS.1
PIN 2 = PILOT 12 EV POS.1
PIN 3 = PILOT 14 EV POS.2
PIN 4 = PILOT 14 EV POS.3
PIN 5 = PILOT 14 EV POS.4
PIN 6 = PILOT 12 EV POS.4
PIN 7 = PILOT 14 EV POS.5
PIN 8 = PILOT 14 EV POS.7
PIN 9 = PILOT 14 EV POS.8
PIN 10 = PILOT 14 EV POS.9
PIN 11 = PILOT 14 EV POS.10
PIN 12 = PILOT 14 EV POS.11
PIN 13 = PILOT 12 EV POS.11
PIN 14 = PILOT 14 EV POS.12
PIN 15 = PILOT 12 EV POS.12

25 PIN Connector correspondence for bistable, 2x3/2, 5/3 manifold and CEB monostable valves (electrical contact for bistable)

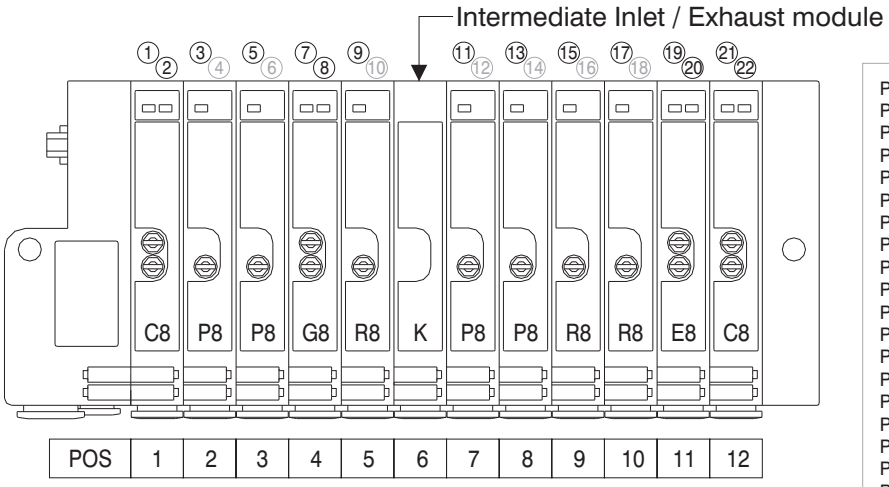

PIN 1 = PILOT 14 EV POS.1
PIN 2 = PILOT 12 EV POS.1
PIN 3 = PILOT 14 EV POS.2
PIN 4 = NOT CONNECTED
PIN 5 = PILOT 14 EV POS.3
PIN 6 = NOT CONNECTED
PIN 7 = PILOT 14 EV POS.4
PIN 8 = PILOT 12 EV POS.4
PIN 9 = PILOT 14 EV POS.5
PIN 10 = NOT CONNECTED
PIN 11 = PILOT 14 EV POS.7
PIN 12 = NOT CONNECTED
PIN 13 = PILOT 14 EV POS.8
PIN 14 = NOT CONNECTED
PIN 15 = PILOT 14 EV POS.9
PIN 16 = NOT CONNECTED
PIN 17 = PILOT 14 EV POS.10
PIN 18 = NOT CONNECTED
PIN 19 = PILOT 14 EV POS.11
PIN 20 = PILOT 12 EV POS.11
PIN 21 = PILOT 14 EV POS.12
PIN 22 = PILOT 12 EV POS.12

25 PIN Connector correspondence for manifold for 22 position manifold with standard monostable valves

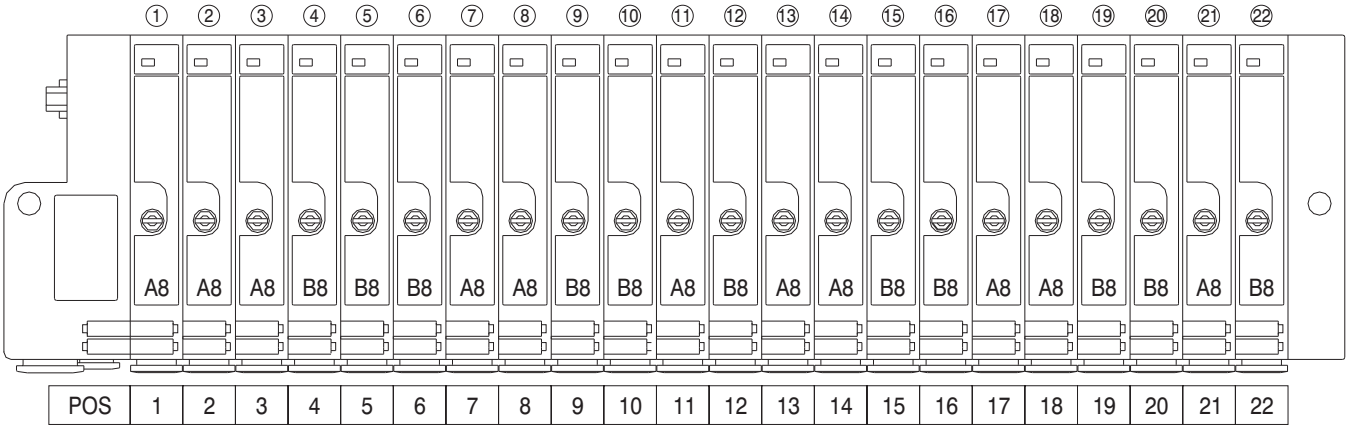

Mounting

From the top

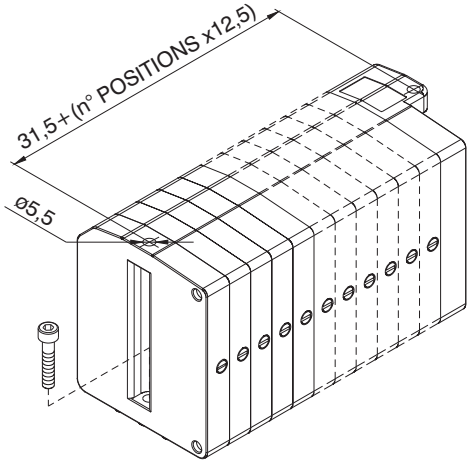

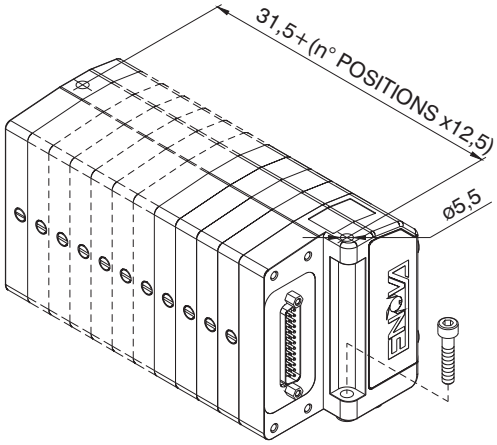

From the bottom

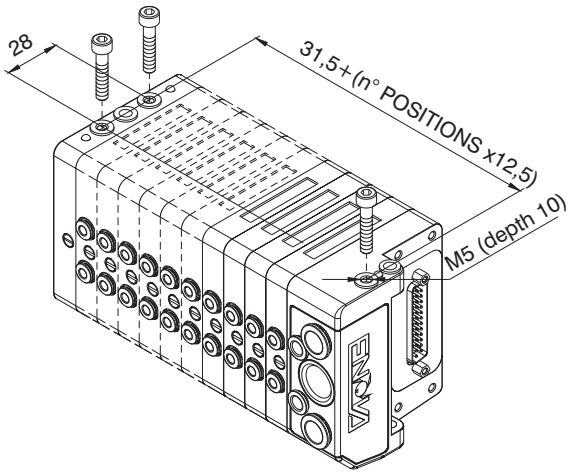

On DIN rail

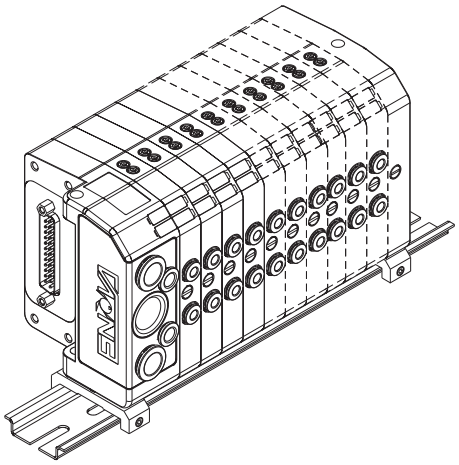

90° Bracket

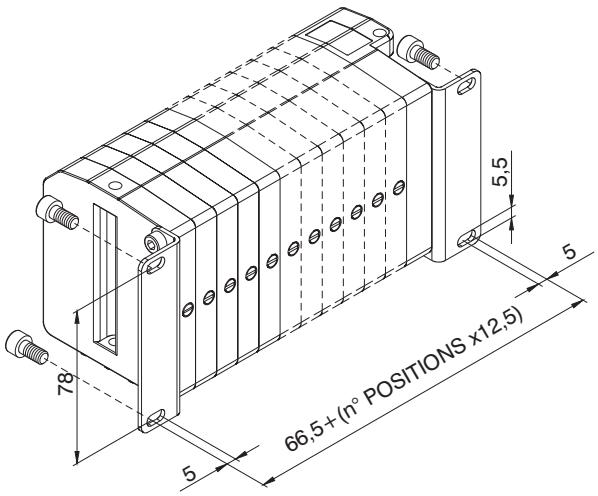

Maximum envelop size based on the number of positions

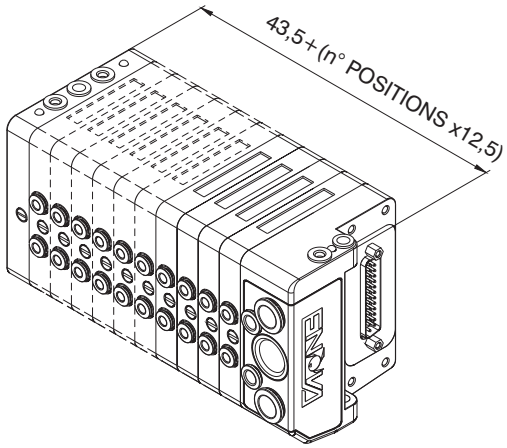

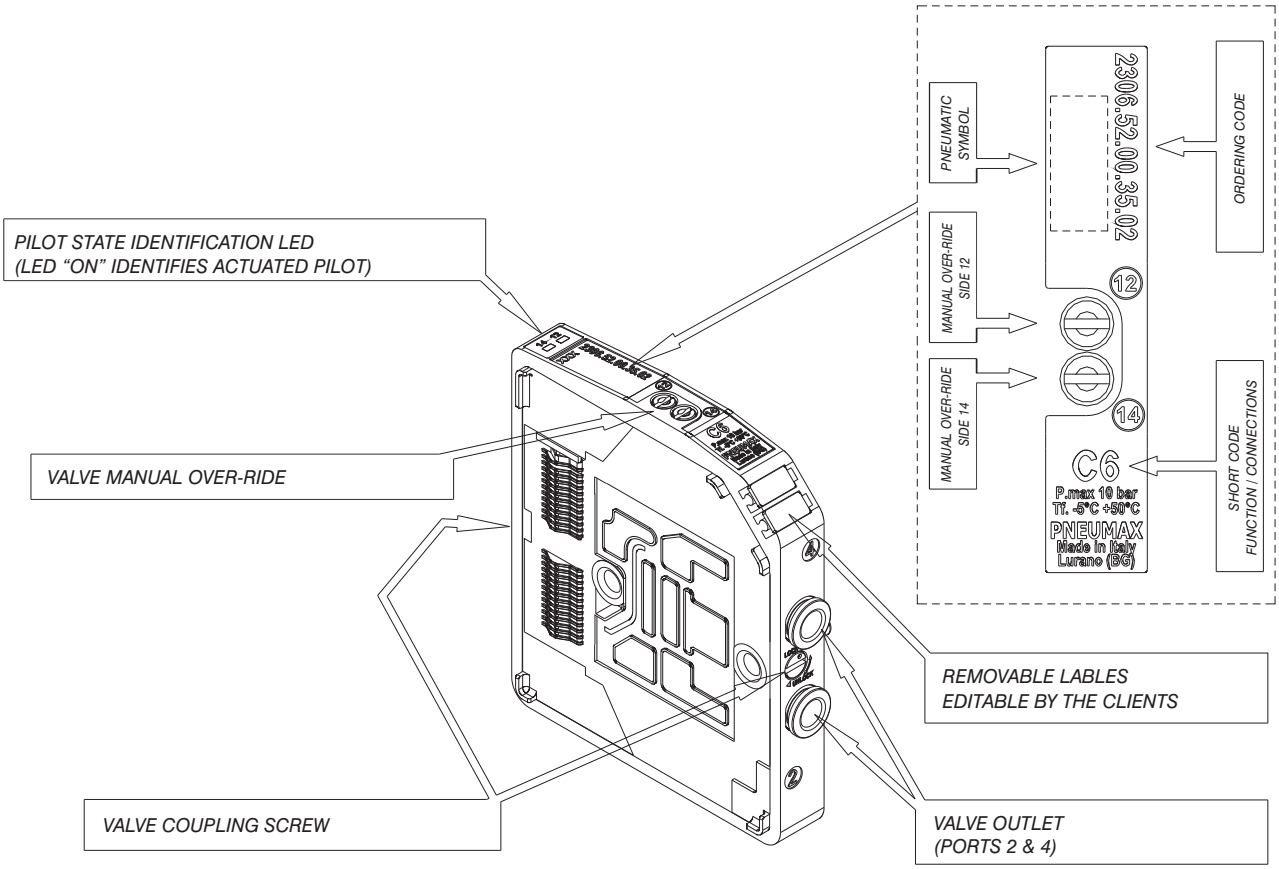
PILOT STATE IDENTIFICATION LED
(LED "ON" IDENTIFIES ACTUATED PILOT)
VALVE MANUAL OVER-RIDE
VALVE COUPLING SCREW
REMOVABLE LABLES
EDITABLE BY THE CLIENTS
VALVE OUTLET
(PORTS 2 & 4)
PNEUMATIC SYMBOL
MANUAL OVER-RIDE SIDE 12
MANUAL OVER-RIDE SIDE 14
2306.52.00.35.02
ORDERING CODE
12
14
C6
P.max 10 bar
Tf. -5°C ÷50°C
PNEUMAX
Made in Italy
Lurano (BG)
SHORT CODE
FUNCTION / CONNECTIONS

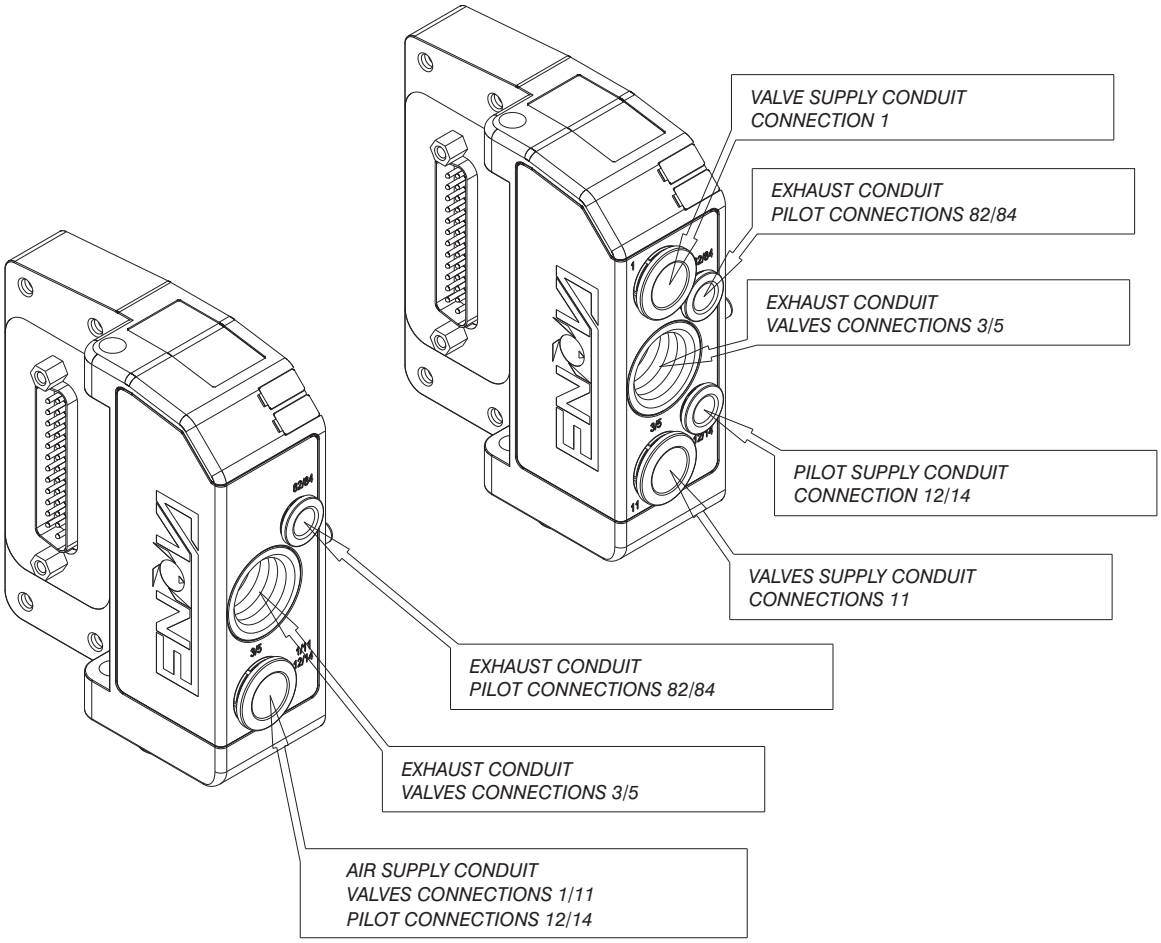
VALVE SUPPLY CONDUIT
CONNECTION 1
EXHAUST CONDUIT
PILOT CONNECTIONS 82/84
EXHAUST CONDUIT
VALVES CONNECTIONS 3/5
PILOT SUPPLY CONDUIT
CONNECTION 12/14
VALVES SUPPLY CONDUIT
CONNECTIONS 11
EXHAUST CONDUIT
PILOT CONNECTIONS 82/84
EXHAUST CONDUIT
VALVES CONNECTIONS 3/5
AIR SUPPLY CONDUIT
VALVES CONNECTIONS 1/11
PILOT CONNECTIONS 12/14

2

Manual over-ride function

Unstable function

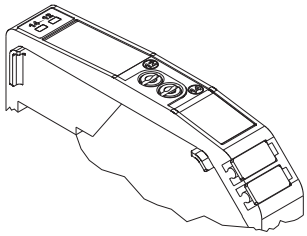

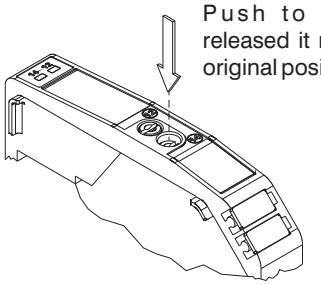

Push to actuate (when released it moves back to the original position)

Bistable function

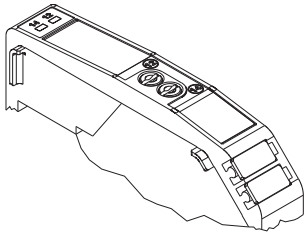

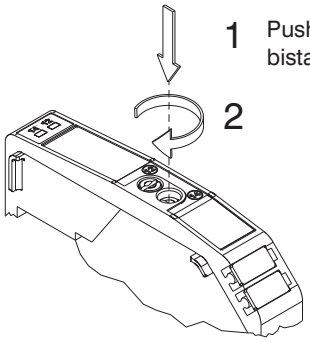

1 Push and turn to get the bistable function

2

NOTE: It is strongly suggested to replace the original position after using

Manifold assembly

The assembly procedure should start from the end-plate which should be positioned on a flat surface. Add the requested modules by simply rotating by 180° the fastening pins by means of a 1x5.5 flat screw driver. The last module to be assembles shall be the inlet module

Fastening pins rotation direction:
- To lock: rotate anticlockwise (in the direction of the LOCK print on the case)
- To unlock: rotate clockwise (in the direction of the UNLOCK print on the case)

The same procedure shall be used to add or remove any module.

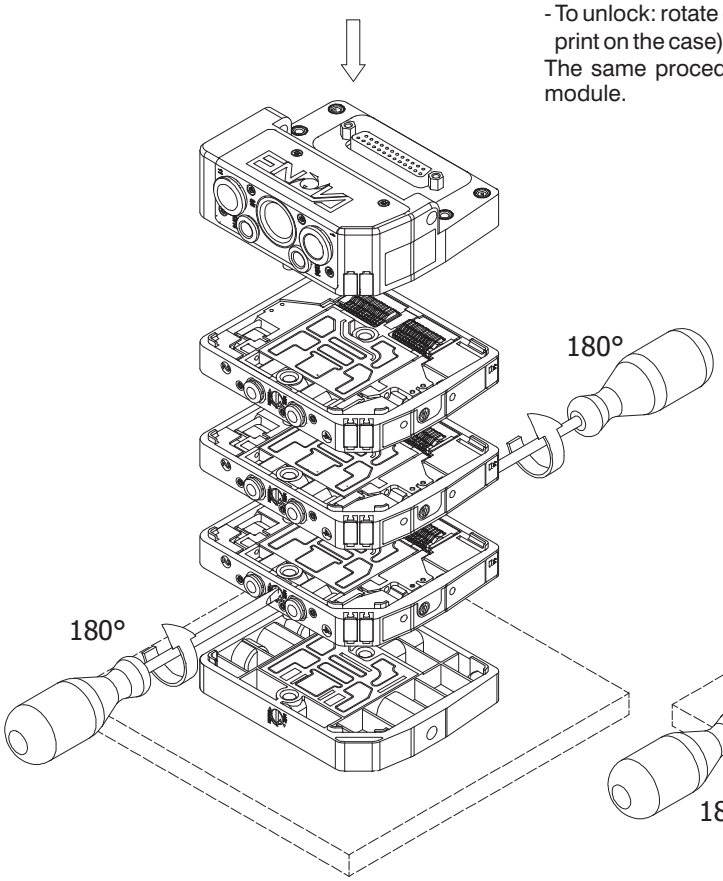

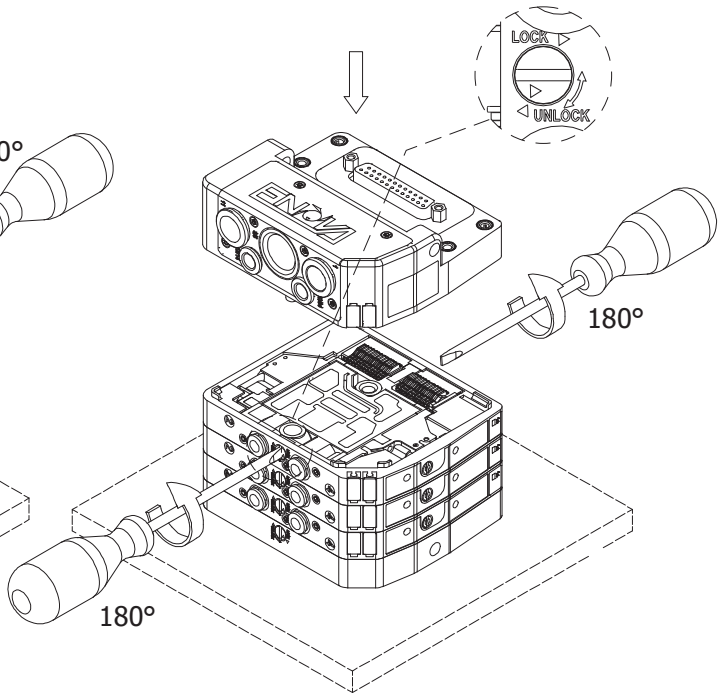

Manifold Lay-Out configuration

E __ . __ . __ . __ __ __ __ __ __ __ __ __ __ __ __ __ __

ACCESSORIES :
0= none
D= DIN bar adapter
S= 90° Fixing bracket

ENDPLATES SELECTION :
A= 5 ports endplated left side plus right side endplated
B= 3 ports endplated left side plus right side endplated

ELECTRICAL CONNECTION:
MP= MULTIPOLAR PNP (standard)
MN= MULTIPOLAR NPN
CA= CANopen® 22 OUT
CB= CANopen® 22 OUT + 8 IN
CC= CANopen® 22 OUT + 16 IN
CD= CANopen® 22 OUT + 24 IN
DA= DeviceNet 22 OUT
DB= DeviceNet OUT + 8 IN
DC= DeviceNet 22 OUT + 16 IN
DD= DeviceNet OUT + 24 IN
PA= PROFIBUS 22 OUT
PB= PROFIBUS 22 OUT + 8 IN
PC= PROFIBUS 16 OUT + 16 IN

SHORT CODE
FUNCTION / CONNECTION:
A4= EV 5/2 MONOST. SOL.-SPRING Ø4
A6= EV 5/2 MONOST. SOL.-SPRING Ø6
A8= EV 5/2 MONOST. SOL.-SPRING Ø8
B4= EV 5/2 MONOST. SOL.-DIFFERENTIAL Ø4
B6= EV 5/2 MONOST. SOL.-DIFFERENTIAL Ø6
B8= EV 5/2 MONOST. SOL.-DIFFERENTIAL Ø8
C4= EV 5/2 BISTABLE SOL.-SOL. Ø4
C6= EV 5/2 BISTABLE SOL.-SOL. Ø6
C8= EV 5/2 BISTABLE SOL.-SOL. Ø8
E4= EV 5/3 CC SOL.-SOL. Ø4
E6= EV 5/3 CC SOL.-SOL. Ø6
E8= EV 5/3 CC SOL.-SOL. Ø8
F4= EV 2x3/2 NC-NC (= 5/3 CA) SOL.-SOL. Ø4
F6= EV 2x3/2 NC-NC (= 5/3 CA) SOL.-SOL. Ø6
F8= EV 2x3/2 NC-NC (= 5/3 CA) SOL.-SOL. Ø8
G4= EV 2x3/2 NO-NO (= 5/3 CP) SOL.-SOL. Ø4
G6= EV 2x3/2 NO-NO (= 5/3 CP) SOL.-SOL. Ø6
G8= EV 2x3/2 NO-NO (= 5/3 CP) SOL.-SOL. Ø8
H4= EV 2x3/2 NC-NO SOL.-SOL. Ø4
H6= EV 2x3/2 NC-NO SOL.-SOL. Ø6
H8= EV 2x3/2 NC-NO SOL.-SOL. Ø8
L4= EV 2x2/2 NC-NC SOL.-SOL. Ø4
L6= EV 2x2/2 NC-NC SOL.-SOL. Ø6
L8= EV 2x2/2 NC-NC SOL.-SOL. Ø8
M4= EV 2x2/2 NO-NO SOL.-SOL. Ø4
M6= EV 2x2/2 NO-NO SOL.-SOL. Ø6
M8= EV 2x2/2 NO-NO SOL.-SOL. Ø8
N4= EV 2x2/2 NC-NO SOL.-SOL. Ø4
N6= EV 2x2/2 NC-NO SOL.-SOL. Ø6
N8= EV 2x2/2 NC-NO SOL.-SOL. Ø8
P4= EV 5/2 MONOST. SOL.-SPRING CEB Ø4
P6= EV 5/2 MONOST. SOL.-SPRING CEB Ø6
P8= EV 5/2 MONOST. SOL.-SPRING CEB Ø8
R4= EV 5/2 MONOST. SOL.-DIFF. CEB Ø4
R6= EV 5/2 MONOST. SOL.-DIFF. CEB Ø6
R8= EV 5/2 MONOST. SOL.-DIFF. CEB Ø8
T1 = 1 ELECTRIC SIGNAL THROUGH MODULE
T2 = 2 ELECTRIC SIGNALS THROUGH MODULE

J= INTERMEDIATE EXHAUST MODULE Ø8
K= INTERMEDIATE INLET MODULE Ø8
W = INLET-EXHAUST MODULE Ø8

X= INLET DIAPHRAGM
Y= EXHAUST DIAPHRAGM
Z= INLET -EXHAUST DIAPHRAGM

NOTE:
While configuring the manifold always bear in mind that the maximum number of electrical signals available is 22.
N.B. CEB = Electrical connector for bistable valves (uses two electric signals)
Intermediate supply / exhaust modules require the same space as a valve but do not use any electric signals (as the electric connector carries forward all signals received from the module immediately before).
The separation diaphragms are positioned between two modules and replace the standard seal therefore do not increase the dimension of the assembly. When using a separation diaphragm of any type, it is necessary to add, in any position between diaphragm and the manifold and plate, an extra air supply / exhaust module depending on the type of diaphragm used.

2

General:

CANopen® module is directly integrated on Enova solenoid valves manifold via a 25 poles connector, normally used for multipolar cable connection.
Enova solenoid valves connected to node must be PNP equivalent (final 02 in ordering code).
The node can be easily installed also on solenoid valves manifold already mounted on equipment.
Module can manage up to 22 solenoid valves, and, in the same time, a max number of 3 Input modules 5200.08.
CANopen® module recognizes automatically the presence of the Input modules on power on.
Regardless of the number of Input modules connected, the managable solenoid valves are 22.
Node power supply is made by a M12 4P male circular connector.
The separation between node 24 VDC Power supply and outputs 24 VDC allows to switch off the outputs maintaning powered the node and inputs, if present.
Connection to Bus CANopen® is possible via 2 M12 5P male - female circular connectors; these two are connected in parallel and according to CiA Draft Standard Proposal 301 V 4.10 (15 August 2006).
Transmission speed can be set by 3 dip-switches.
The node address can be set by 6 dip-switches using BCD numeration.
The module includes an internal terminating resistance that can be activated by a dip-switch.

Ordering code

5523.22

Scheme / Overall dimensions and I/O layout :

POWER SUPPLY connector

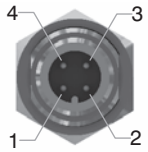

M12 4P MALE

PIN	DESCRIPTION
1	+24 VDC (NODE & INPUTS)
2	NC
3	GND
4	+24 VDC (OUTPUTS)

NETWORK connectors

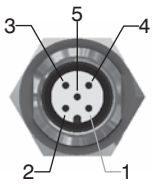

M12 5P FEMALE

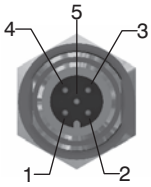

M12 5P MALE

PIN	SIGNAL	DESCRIPTION
1	CAN_SHLD	Optional CAN Shield
2	CAN_V+	Optional CAN external positive supply (Dedicated for supply of transceiver and Optocouplers, if galvanic isolation of the bus node applies)
3	CAN_GND	Ground / 0V / V-
4	CAN_H	CAN_H bus line (dominant high)
5	CAN_L	CAN_L bus line (dominant low)

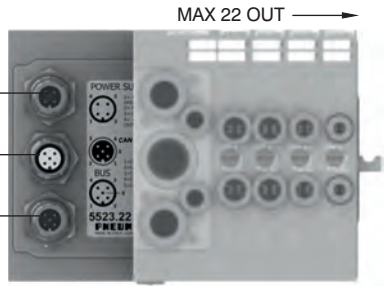

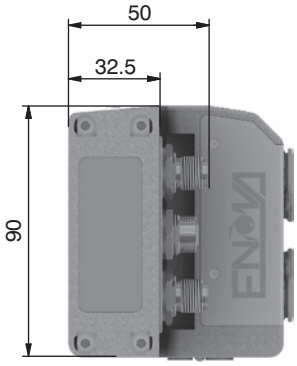

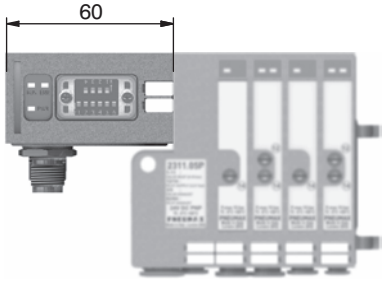

Technical characteristics

	Model	5523.22
	Specifications	CiA Draft Standard Proposal 301 V 4.10 (15 August 2006)
	Case	Reinforced technopolymer
Power supply	Power supply connection	M12 4P male connector (IEC 60947-5-2)
	Power supply voltage	+24 VDC +/- 10%
	Node consumption (without inputs)	25 mA
	Power supply diagnosis	Green led PWR
Outputs	PNP equivalent outputs	+24 VDC +/- 10%
	Maximum current for output	100 mA
	Maximum output number	22
	Max output simultaneously actuated	22
Network	Network connectors	2 M12 5P connectors male-female (IEC 60947-5-2)
	Baud rate	10 - 20 - 50 - 125 - 250 - 500 - 800 - 1000 Kbit/s
	Addresses, possibile numbers	From 1 to 63
	Max nodes in net	64 (slave + master)
	Bus maximum recommended length	100 m a 500 Kbit/s
	Bus diagnosis	Green led + Red led
	Configuration file	Available from our web site: http://www.pneumaxspa.com
	IP protection grade	IP65 when assembled
	Temperature range	From -0° to +50° C

General:

DeviceNet module is directly integrated on Enova solenoid valves manifold via a 25 poles connector, normally used for multipolar cable connection.
Enova solenoid valves connected to node must be PNP equivalent (final 02 in ordering code).
The node can be easily installed also on solenoid valves manifold already mounted on equipment.
Module can manage up to 22 solenoid valves, and, in the same time, a max number of 3 Input modules 5200.08.
DeviceNet module recognizes automatically the presence of the Input modules on power on.
Regardless of the number of Input modules connected, the managable solenoid valves are 22.
Node power supply is made by a M12 4P male circular connector.
The separation between node 24 VDC Power supply and outputs 24 VDC allows to switch off the outputs maintaning powered the node and inputs, if present.
Connection to Bus DeviceNet is possible via 2 M12 5P male - female circular connectors; these two are connected in parallel and according to DeviceNet Specifications Volume I, release 2.0.
Transmission speed can be set by 3 dip-switches.
The node address can be set by 6 dip-switches using BCD numeration.
The module includes an internal terminating resistance that can be activated by a dip-switch.

Ordering code

5423.22

Scheme / Overall dimensions and I/O layout :

POWER SUPPLY connector

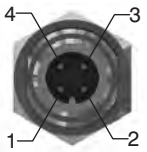

M12 4P MALE

PIN	DESCRIPTION
1	+24 VDC (NODE & INPUTS)
2	NC
3	GND
4	+24 VDC (OUTPUTS)

NETWORK connectors

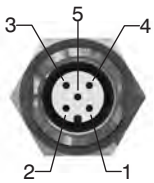

M12 5P FEMALE

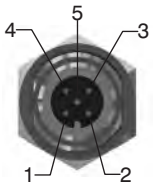

M12 5P MALE

PIN	SIGNAL	DESCRIPTION
1	CAN_SHLD	Optional CAN Shield
2	CAN_V+	Optional CAN external positive supply (Dedicated for supply of transceiver and Optocouplers, if galvanic isolation of the bus node applies)
3	CAN_GND	Ground / 0V / V-
4	CAN_H	CAN_H bus line (dominant high)
5	CAN_L	CAN_L bus line (dominant low)

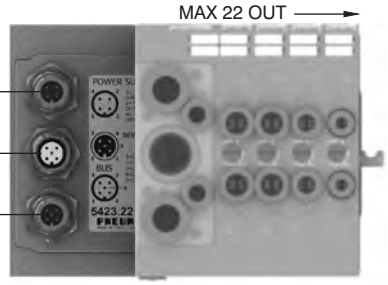

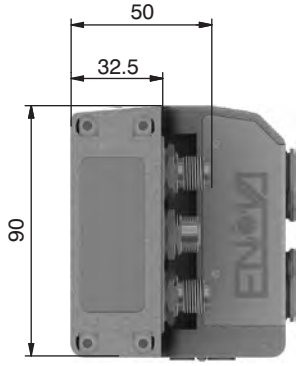

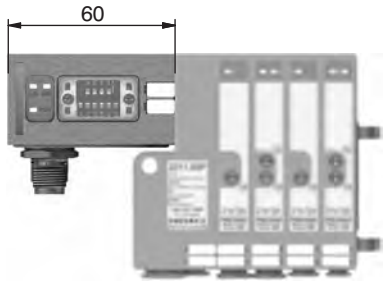

Technical characteristics

	Model	5423.22
	Specifications	DeviceNet Specifications Volume I, release 2.0.
	Case	Reinforced technopolymer
Power supply	Power supply connection	M12 4P male connector (IEC 60947-5-2)
	Power supply voltage	+24 VDC +/- 10%
	Node consumption (without inputs)	25 mA
	Power supply diagnosis	Green led PWR
Outputs	PNP equivalent outputs	+24 VDC +/- 10%
	Maximum current for output	100 mA
	Maximum output number	22
	Max output simultaneously actuated	22
Network	Network connectors	2 M12 5P connectors male-female (IEC 60947-5-2)
	Baud rate	125 - 250 - 500 Kbit/s
	Addresses, possibile numbers	From 1 to 63
	Max nodes in net	64 (slave + master)
	Bus maximum recommended length	100 m a 500 Kbit/s
	Bus diagnosis	Green led + Red led
	Configuration file	Available from our web site: http://www.pneumaxspa.com
	IP protection grade	IP65 when assembled
	Temperature range	From -0° to +50° C

2

General:

PROFIBUS DP module is directly integrated on Enova solenoid valves manifold via a 25 poles connector, normally used for multipolar cable connection.
Enova solenoid valves connected to node must be PNP equivalent (final 02 in ordering code).
The node can be easily installed also on solenoid valves manifold already mounted on equipment.
Module can manage up to 22 solenoid valves, when is connected 0 or 1 INPUT modules, or 16 if node is fitted with 2 INPUT modules. The max number of INPUT modules 5200.08, is 2 .
PROFIBUS DP module recognizes automatically the presence of the Input modules on power on.
Node power supply is made by a M12 4P male circular connector.
The separation between node 24 VDC Power supply and outputs 24 VDC allows to switch off the outputs maintaning powered the node and inputs, if present.
Connection to Bus PROFIBUS DP is possible via 2 M12 type B 5P male - female circular connectors; these two are connected in parallel and according to PROFIBUS Interconnection Technology (Version 1.1 : August 2001).
The node address can be set using BCD numeration: 4 dip-switches for the units and 4 dip-switches for the tens.
The module includes an internal terminating resistance that can be activated by a dip-switch.

Ordering code

5323.22

Scheme / Overall dimensions and I/O layout :

POWER SUPPLY connector

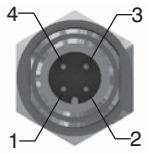

M12 4P MALE

PIN	DESCRIPTION
1	+24 VDC (NODE & INPUTS)
2	NC
3	GND
4	+24 VDC (OUTPUTS)

NETWORK connectors

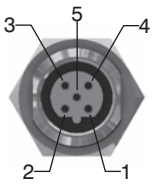

M12 5P FEMALE

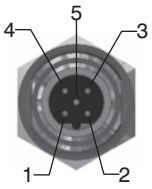

M12 5P MALE

PIN	SIGNAL	DESCRIPTION
1	VP	Power supply plus, (P5V)
2	A-line	Receive / Transmit data -N, A-line
3	DGND	Data Ground (reference potential to VP)
4	B-line	Receive / Transmit data -plus, B-line
5	SHIELD	Shield or PE

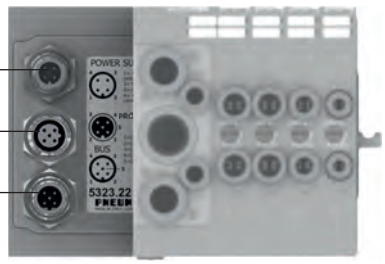

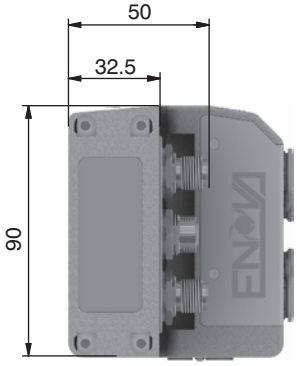

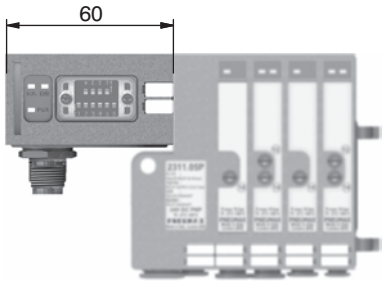

Technical characteristics

	Model	5323.22
	Specifications	PROFIBUS DP
	Case	Reinforced technopolymer
Power supply	Power supply connection	M12 4P male connector (IEC 60947-5-2)
	Power supply voltage	+24 VDC +/- 10%
	Node consumption (without inputs)	50 mA
	Power supply diagnosis	Green led PWR
Outputs	PNP equivalent outputs	+24 VDC +/- 10%
	Maximum current for output	100 mA
	Maximum output number	22 or 16 if node is fitted with 2 INPUT modules
	Max output simultaneously actuated	22
Network	Network connectors	2 M12 5P connectors male-female (IEC 60947-5-2)
	Baud rate	125 - 250 - 500 Kbit/s
	Addresses, possibile numbers	From 1 to 63
	Max nodes in net	64 (slave + master)
	Bus maximum recommended length	100 m a 500 Kbit/s
	Bus diagnosis	Green led + Red led
	Configuration file	Available from our web site: http://www.pneumaxspa.com
	IP protection grade	IP65 when assembled
	Temperature range	From -0° to +50° C

General:

Modules have 8 connectors M8 3P female.

The Inputs are PNP equivalent 24 VDC ±10%.
To each connector it is possible to plug both 2 wires Inputs (switches, magnetic switches pressure switches, etc) or 3 wires Inputs (proximity, photocells, electronic sensors, etc).
The maximum current available for all 8 Inputs is 200 mA.
Each module includes a 200 mA resettable fuse. If a short circuit or a overcharge (overall current >200mA) occur the safety device acts cutting the 24 VDC power supply to all M8 connectors on the module and switching off the green led PWR. Any other Input module connected to the node will remain powered and will function correctly.
Once the cause of the fault disappears the green led PWR light up indicating the ON state and the node will re-start to operate.
The Maximum number of Input modules supported is 3 for CANopen and DeviceNet, 2 for PROFIBUS DP.

Ordering code

5200.08

Scheme / Overall dimensions and I/O layout :

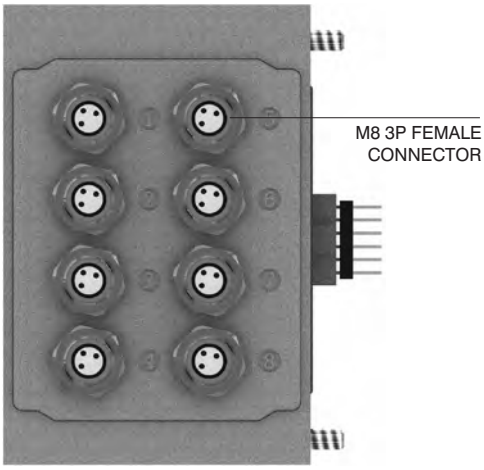

Module 1

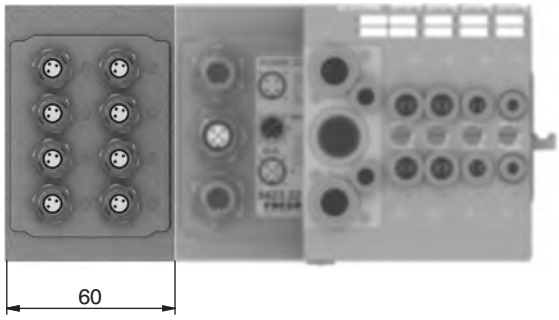

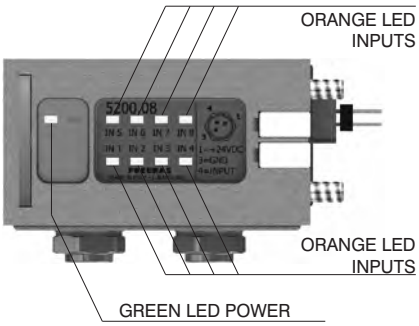

Module 2 Module 1

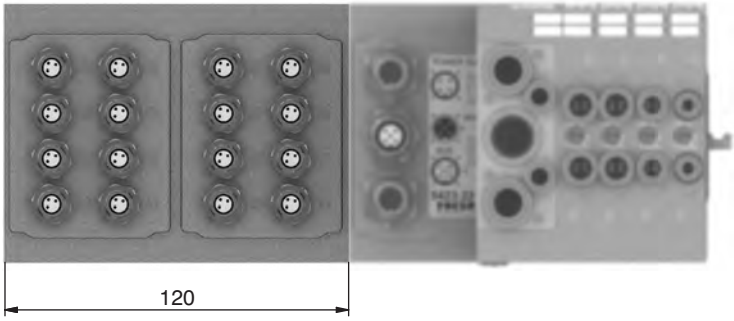

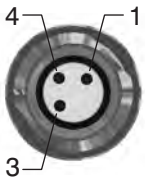

PIN	DESCRIPTION
1	+24 VDC
4	INPUT
3	GND

Module 3 Module 2 Module 1

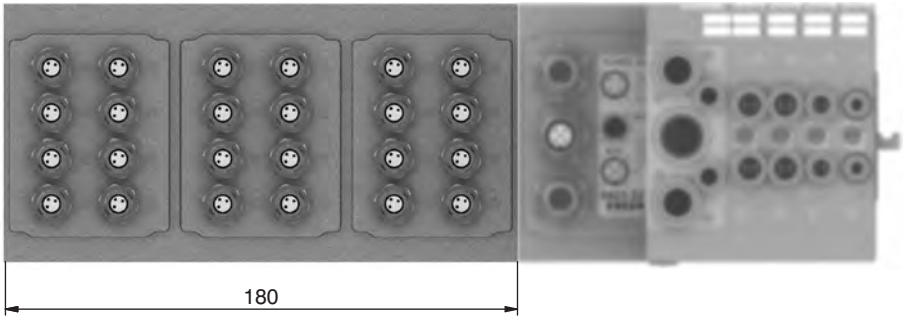

2

Manifold layout configuration complete with Serial systems

E __ . __ . __ . __ __ __ __ __ __ __ __ __ __ __ __ __

ACCESSORIES :
0= none
D= DIN bar adapter
S= 90° Fixing bracket

ENDPLATES SELECTION :
A= 5 ports endplated left side plus right side endplated
B= 3 ports endplated left side plus right side endplated

BUS CONFIGURATION :
CA= CANopen® 22 OUT
CB= CANopen® 22 OUT + 8 INPUTS
CC= CANopen® 22 OUT + 16 INPUTS
CD= CANopen® 22 OUT + 24 INPUTS
DA= DeviceNet 22 OUT
DB= DeviceNet 22 OUT + 8 INPUTS
DC= DeviceNet 22 OUT + 16 INPUTS
DD= DeviceNet 22 OUT + 24 INPUTS
PA= PROFIBUS 22 OUT
PB= PROFIBUS 22 OUT + 8 INPUTS
PC= PROFIBUS 16 OUT + 16 INPUTS

SHORT CODE
FUNCTION / CONNECTION:
A4= EV 5/2 MONOST. SOL.-SPRING Ø4
A6= EV 5/2 MONOST. SOL.-SPRING Ø6
A8= EV 5/2 MONOST. SOL.-SPRING Ø8
B4= EV 5/2 MONOST. SOL.-DIFFERENTIAL Ø4
B6= EV 5/2 MONOST. SOL.-DIFFERENTIAL Ø6
B8= EV 5/2 MONOST. SOL.-DIFFERENTIAL Ø8
C4= EV 5/2 BISTABLE SOL.-SOL. Ø4
C6= EV 5/2 BISTABLE SOL.-SOL. Ø6
C8= EV 5/2 BISTABLE SOL.-SOL. Ø8
E4= EV 5/3 CC SOL.-SOL. Ø4
E6= EV 5/3 CC SOL.-SOL. Ø6
E8= EV 5/3 CC SOL.-SOL. Ø8
F4= EV 2x3/2 NC-NC (= 5/3 CA) SOL.-SOL. Ø4
F6= EV 2x3/2 NC-NC (= 5/3 CA) SOL.-SOL. Ø6
F8= EV 2x3/2 NC-NC (= 5/3 CA) SOL.-SOL. Ø8
G4= EV 2x3/2 NO-NO (= 5/3 CP) SOL.-SOL. Ø4
G6= EV 2x3/2 NO-NO (= 5/3 CP) SOL.-SOL. Ø6
G8= EV 2x3/2 NO-NO (= 5/3 CP) SOL.-SOL. Ø8
H4= EV 2x3/2 NC-NO SOL.-SOL. Ø4
H6= EV 2x3/2 NC-NO SOL.-SOL. Ø6
H8= EV 2x3/2 NC-NO SOL.-SOL. Ø8
L4= EV 2x2/2 NC-NC SOL.-SOL. Ø4
L6= EV 2x2/2 NC-NC SOL.-SOL. Ø6
L8= EV 2x2/2 NC-NC SOL.-SOL. Ø8
M4= EV 2x2/2 NO-NO SOL.-SOL. Ø4
M6= EV 2x2/2 NO-NO SOL.-SOL. Ø6
M8= EV 2x2/2 NO-NO SOL.-SOL. Ø8
N4= EV 2x2/2 NC-NO SOL.-SOL. Ø4
N6= EV 2x2/2 NC-NO SOL.-SOL. Ø6
N8= EV 2x2/2 NC-NO SOL.-SOL. Ø8
P4= EV 5/2 MONOST. SOL.-SPRING CEB Ø4
P6= EV 5/2 MONOST. SOL.-SPRING CEB Ø6
P8= EV 5/2 MONOST. SOL.-SPRING CEB Ø8
R4= EV 5/2 MONOST. SOL.-DIFF. CEB Ø4
R6= EV 5/2 MONOST. SOL.-DIFF. CEB Ø6
R8= EV 5/2 MONOST. SOL.-DIFF. CEB Ø8
T1 = 1 ELECTRIC SIGNAL THROUGH MODULE
T2 = 2 ELECTRIC SIGNALS THROUGH MODULE

J= INTERMEDIATE EXHAUST MODULE Ø8
K= INTERMEDIATE INLET MODULE Ø8
W = INLET-EXHAUST MODULE Ø8

X= INLET DIAPHRAGM
Y= EXHAUST DIAPHRAGM
Z= INLET -EXHAUST DIAPHRAGM

NOTE:
While configuring the manifold always bear in mind that the maximum number of electrical signals available is 22.
N.B. CEB = Electrical connector for bistable valves (uses two electric signals)
Intermediate supply / exhaust modules require the same space as a valve but do not use any electric signals (as the electric connector carries forward all signals received from the module immediately before).
The separation diaphragms are positioned between two modules and replace the standard seal therefore do not increase the dimension of the assembly. When using a separation diaphragm of any type, it is necessary to add, in any position between diaphragm and the manifold and plate, an extra air supply / exhaust module depending on the type of diaphragm used.

Socket for Power supply, M12A 4P Female

Ordering code

5312A.F04.00

Power supply straight connector
Upper view slave connector

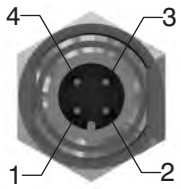

1	+24 VDC (Node & Inputs)
2	
3	0 V
4	+24 VDC (Outputs)

Plug for Input module, M8 3P Male

Ordering code

5308A.M03.00

Input straight connector
Upper view slave connector

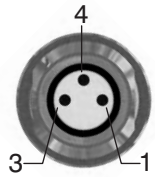

1	+24 VDC
4	INPUT
3	GND

Socket for BUS CANOpen, DeviceNet, M12A 5P Female

Ordering code

5312A.F05.00

Network straight connector
Upper view slave connector

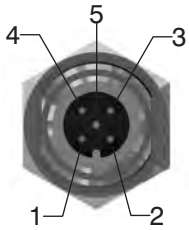

1	(CAN_SHIELD)
2	(CAN_V+)
3	CAN_GND
4	CAN_H
5	CAN_L

Plug for BUS CANOpen, DeviceNet, M12A 5P Male

Ordering code

5312A.M05.00

Network straight connector
Upper view slave connector

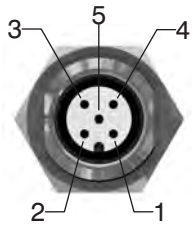

1	(CAN_SHIELD)
2	(CAN_V+)
3	CAN_GND
4	CAN_H
5	CAN_L

Socket for BUS PROFIBUS DP, M12B 5P Female

Ordering code

5312B.F05.00

Network straight connector
Upper view slave connector

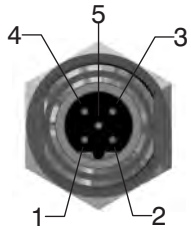

1	Power Supply
2	A-line
3	DGND
4	B-line
5	SHIELD

Plug for BUS PROFIBUS DP, M12B 5P Male

Ordering code

5312B.M05.00

Network straight connector
Upper view slave connector

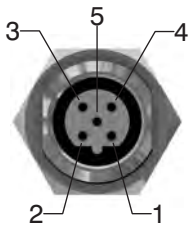

1	Power Supply
2	A-line
3	DGND
4	B-line
5	SHIELD

M12 Plug

Ordering code

5300.T12

M8 Plug

Ordering code

5300.T08

Trademarks: EtherCAT® is registered trademark and patented technology, licensed by Beckhoff Automation GmbH, Germany.

OPTYMA32-S

General characteristics

Optyma32-S has been designed in order to complete the Optyma series of valves.
Optyma –S ,12.5mm size, integrates all the technical features already developed and implemented on the Optima T & F such as the integrated electrical connection. Further technical specifications are:
- Flow rate: up to 550[Nl/min], using the modular base with Ø8 quick fitting tube
- Modular base available with Ø4, Ø6, Ø8 quick fitting tube
- The solenoid pilots are low consumption and fitted on the same side of the valve
- Mono and bi-stable valves have the same dimension
- Easy and fast assembly on the sub base thanks to the “one screw” mounting solution
- Possibility to replace a valve without the need of disconnecting the pneumatic pipes
- Electrical and pneumatic connections positioned on the same side
- Possibility to operate with different pressures and vacuum
- Quick coupling connections for consumption, exhaust and air supply all on the same side
- Management of 32electrical signals,(16 bi-stable or any combination off mono and bi-stable vales up to max 32 signals).
- The electrical connection is achieved thanks to a 37 pole connector, as an alternative it is possible to use a 25 pole connector which can handle a maximum of 22 electrical signals.
- The protection grade is IP65 directly integrated in the manifold components.
- Manifolds can be directly integrated with the most common field bus systems.

"Shifting time of pneumatic directional control valves or moving parts, logic devices were measured in accordance to ISO 12238:2001, Pneumatic fluid power-Directional control valves-Measurement of shifting time"

Main characteristics

One size: 12.5mm thick
Monostable and bistable valves with same dimensions
Modular subbase with two positions
Modular subbases assembled via tie rods
Quick coupling connections directly integrated in the sub base
Integrated and optimized electrical connections as standard
IP65 protection grade as standard

Construction characteristics

Body	Technopolymer
Operators	Technopolymer
Spools	AISI 303 stainless steel
Spacers	Technopolymer
Seals	NBR
Piston seals	NBR
Springs	AISI 302 stainless steel
Pistons	Technopolymer

Functions

EV 5/2 MONOST. SOL. SPRING
EV 5/2 MONOST. SOL. DIFFERENTIAL
EV 5/2 BISTABLE SOL. SOL.
EV 5/3 CC SOL. SOL.
EV 2x3/2 NC-NC (= 5/3 OC) SOL. SOL.
EV 2x3/2 NO-NO (= 5/3 PC) SOL. SOL.
EV 2x3/2 NC-NO SOL. SOL.
EV 2x3/2 NO-NC SOL. SOL.

Technical characteristics

Voltage	24 VDC ±10% PNP (NPN and AC on request)
Pilot consumption	0,5 Watt
Valve working pressure [1]	from vacuum to 10 bar max.
Pilot working pressure [12-14]	from 2,5 to 7 bar max.
Operating temperature	from -5°C to +50°C
Protection degree	IP65
Life (standard operating conditions)	50.000.000
Fluid	Filtered and lubricated air or not (if lubricated air, the lubrication must be continuous)

Solenoid - Spring

Ordering code

2241.52.00.39.Ⓥ

	VOLTAGE
Ⓥ	02 = 24 VDC PNP
	12 = 24 VDC NPN
	05 = 24 VAC

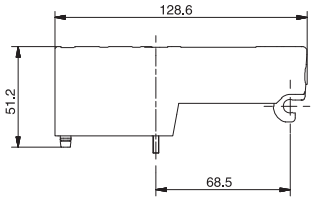

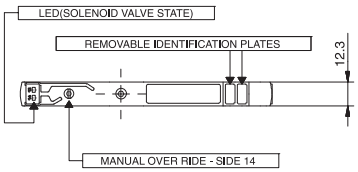

Flow rate at 6 bar with Δp=1 (Nl/min) with Base cod. 2244.01Ⓥ tube Ø4= 140
Flow rate at 6 bar with Δp=1 (Nl/min) with Base cod. 2246.01Ⓥ tube Ø6= 400
*Flow rate at 6 bar with Δp=1 (Nl/min) with Base cod. 2248.01Ⓥ tube Ø8= 550

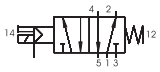

SHORT FUNCTION CODE "A"
"Shifting time of pneumatic directional control valves or moving parts, logic devices were measured in accordance to ISO 12238:2001, Pneumatic fluid power - Directional control valves - Measurement of shifting time."

Operational characteristic

Fluid	*Flow rate at 6 bar with Δp=1 (Nl/min)	Responce time according to ISO 12238, activation time (ms)	Responce time according to ISO 12238, deactivation time (ms)	Working pressure (bar)	Pressure range (bar)	Temperature °C	Weight (gr.)
Filtered air, with or without lubrication	550	12	20	From vacuum to 10	2,5 - 7	-5° / +50°	67

Solenoid - Differential

Ordering code

2241.52.00.36.Ⓥ

	VOLTAGE
Ⓥ	02 = 24 VDC PNP
	12 = 24 VDC NPN
	05 = 24 VAC

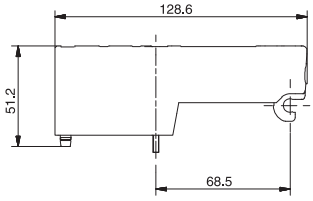

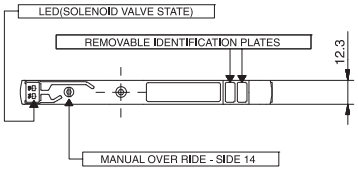

Flow rate at 6 bar with Δp=1 (Nl/min) with Base cod. 2244.01Ⓥ tube Ø4= 140
Flow rate at 6 bar with Δp=1 (Nl/min) with Base cod. 2246.01Ⓥ tube Ø6= 400
*Flow rate at 6 bar with Δp=1 (Nl/min) with Base cod. 2248.01Ⓥ tube Ø8= 550

SHORT FUNCTION CODE "B"
"Shifting time of pneumatic directional control valves or moving parts, logic devices were measured in accordance to ISO 12238:2001, Pneumatic fluid power - Directional control valves - Measurement of shifting time."

Operational characteristic

Fluid	*Flow rate at 6 bar with Δp=1 (Nl/min)	Responce time according to ISO 12238, activation time (ms)	Responce time according to ISO 12238, deactivation time (ms)	Working pressure (bar)	Pressure range (bar)	Temperature °C	Weight (gr.)
Filtered air, with or without lubrication	550	20	25	From vacuum to 10	2,5 - 7	-5° / +50°	67

Solenoid - Solenoid

Ordering code

2241.52.00.35.Ⓥ

	VOLTAGE
Ⓥ	02 = 24 VDC PNP
	12 = 24 VDC NPN
	05 = 24 VAC

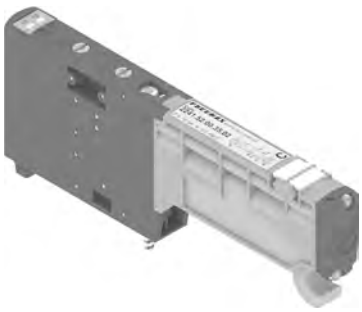

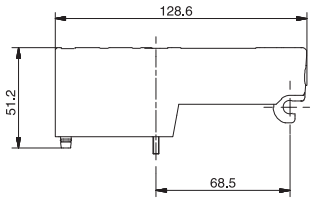

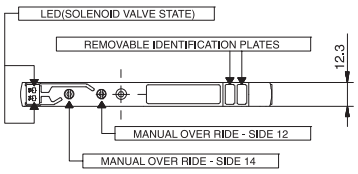

Flow rate at 6 bar with Δp=1 (Nl/min) with Base cod. 2244.01Ⓥ tube Ø4= 140
Flow rate at 6 bar with Δp=1 (Nl/min) with Base cod. 2246.01Ⓥ tube Ø6= 400
*Flow rate at 6 bar with Δp=1 (Nl/min) with Base cod. 2248.01Ⓥ tube Ø8= 550

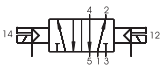

SHORT FUNCTION CODE "C"
"Shifting time of pneumatic directional control valves or moving parts, logic devices were measured in accordance to ISO 12238:2001, Pneumatic fluid power - Directional control valves - Measurement of shifting time."

Operational characteristic

Fluid	*Flow rate at 6 bar with Δp=1 (Nl/min)	Responce time according to ISO 12238, activation time (ms)	Responce time according to ISO 12238, deactivation time (ms)	Working pressure (bar)	Pressure range (bar)	Temperature °C	Weight (gr.)
Filtered air, with or without lubrication	550	10	10	From vacuum to 10	2,5 - 7	-5° / +50°	67

2

Solenoid - Solenoid - (5/3 Closed centres)

Ordering code

2241.53.31.35.Ⓥ

Ⓥ	VOLTAGE
	02 = 24 VDC PNP
	12 = 24 VDC NPN
	05 = 24 VAC

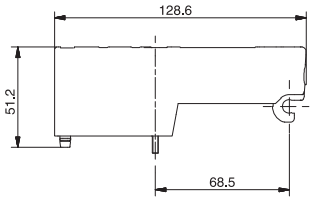

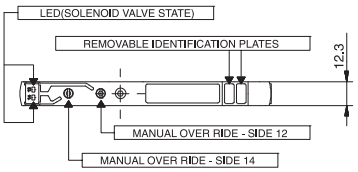

Flow rate at 6 bar with Δp=1 (Nl/min) with Base cod. 2244.01Ⓥ tube Ø4= 140
Flow rate at 6 bar with Δp=1 (Nl/min) with Base cod. 2246.01Ⓥ tube Ø6= 300
*Flow rate at 6 bar with Δp=1 (Nl/min) with Base cod. 2248.01Ⓥ tube Ø8= 400

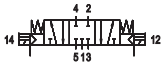

SHORT FUNCTION CODE "E"
"Shifting time of pneumatic directional control valves or moving parts, logic devices were measured in accordance to ISO 12238:2001, Pneumatic fluid power - Directional control valves - Measurement of shifting time."

Operational characteristic

Fluid	*Flow rate at 6 bar with Δp=1 (Nl/min)	Responce time according to ISO 12238, activation time (ms)	Responce time according to ISO 12238, deactivation time (ms)	Working pressure (bar)	Pressure range (bar)	Temperature °C	Weight (gr.)
Filtered air, with or without lubrication	400	15	20	From vacuum to 10	2,5 - 7	-5° / +50°	83

Solenoid - Solenoid 2x3/2

Ordering code

2241.62.Ⓕ.35.Ⓥ

Ⓕ	FUNCTION
	44 = NC - NC (5/3 Open centres)
	55 = NO - NO (5/3 Pressured centres)
Ⓥ	VOLTAGE
	02 = 24 VDC PNP
	12 = 24 VDC NPN
	05 = 24 VAC

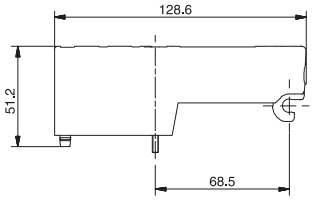

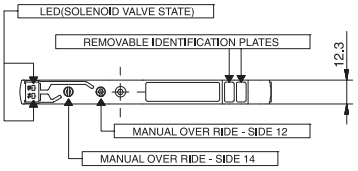

Flow rate at 6 bar with Δp=1 (Nl/min) with Base cod. 2244.01Ⓥ tube Ø4= 140
Flow rate at 6 bar with Δp=1 (Nl/min) with Base cod. 2246.01Ⓥ tube Ø6= 360
*Flow rate at 6 bar with Δp=1 (Nl/min) with Base cod. 2248.01Ⓥ tube Ø8= 420

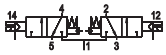

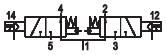

SHORT FUNCTION CODE:
NC-NC (5/3 Open centres)="F"
NO-NO (5/3 Pressured centres)="G"
"Shifting time of pneumatic directional control valves or moving parts, logic devices were measured in accordance to ISO 12238:2001, Pneumatic fluid power - Directional control valves - Measurement of shifting time."

Operational characteristic "Example: If inlet pressure is set at 5bar then pilot pressure must be at least Pp=3+(0.2*5)= 4bar"

Fluid	*Flow rate at 6 bar with Δp=1 (Nl/min)	Responce time according to ISO 12238, activation time (ms)	Responce time according to ISO 12238, deactivation time (ms)	Working pressure (bar)	Pressure range (bar)	Temperature °C	Weight (gr.)
Filtered air, with or without lubrication	420	15	25	From vacuum to 10	≥3+(0,2xP.alim.)	-5° / +50°	75

Solenoid - Solenoid 2x3/2

Ordering code

2241.62.Ⓕ.35.Ⓥ

Ⓕ	FUNCTION
	45 = NC - NO (Normally Closed - Normally Open)
	54 = NO - NC (Normally Open - Normally Closed)
Ⓥ	VOLTAGE
	02 = 24 VDC PNP
	12 = 24 VDC NPN
	05 = 24 VAC

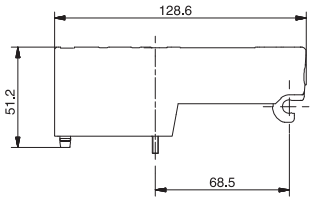

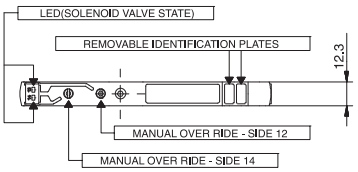

Flow rate at 6 bar with Δp=1 (Nl/min) with Base cod. 2244.01Ⓥ tube Ø4= 140
Flow rate at 6 bar with Δp=1 (Nl/min) with Base cod. 2246.01Ⓥ tube Ø6= 360
*Flow rate at 6 bar with Δp=1 (Nl/min) with Base cod. 2248.01Ⓥ tube Ø8= 420

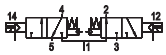

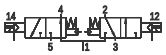

SHORT FUNCTION CODE:
NC-NA="H"
NA-NC="I"
"Shifting time of pneumatic directional control valves or moving parts, logic devices were measured in accordance to ISO 12238:2001, Pneumatic fluid power - Directional control valves - Measurement of shifting time."

Operational characteristic "Example: If inlet pressure is set at 5bar then pilot pressure must be at least Pp=3+(0.2*5)= 4bar"

Fluid	*Flow rate at 6 bar with Δp=1 (Nl/min)	Responce time according to ISO 12238, activation time (ms)	Responce time according to ISO 12238, deactivation time (ms)	Working pressure (bar)	Pressure range (bar)	Temperature °C	Weight (gr.)
Filtered air, with or without lubrication	420	15	25	From vacuum to 10	≥3+(0,2xP.alim.)	-5° / +50°	75

Left Endplates - External pilot base

Ordering code

2240.02.Ⓒ

	CONNECTIONS
	37P = Connectors 37 poles PNP
	25P = Connectors 25 poles PNP
	37N = Connectors 37 poles NPN
	25N = Connectors 25 poles NPN
Ⓒ	37A = Connectors 37 poles AC
	25A = Connectors 25 poles AC

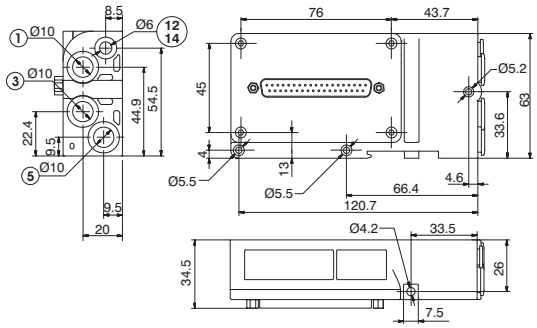

12/14 separated from port 1

Operational characteristic	Fluid	Pressure range (bar)	Pilot working pressure (bar)	Temperature °C	Weight (gr.)
	Filtered air, with or without lubrication	From vacuum to 10	2,5 - 7	-5 - +50	174

Left Endplates - Self-feeding base

Ordering code

2240.12.Ⓒ

	CONNECTIONS
	37P = Connectors 37 poles PNP
	25P = Connectors 25 poles PNP
	37N = Connectors 37 poles NPN
	25N = Connectors 25 poles NPN
Ⓒ	37A = Connectors 37 poles AC
	25A = Connectors 25 poles AC

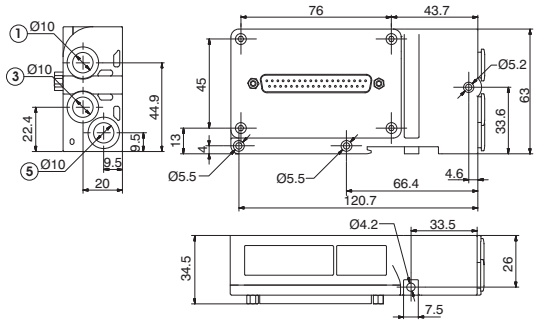

12/14 connected to port 1

Operational characteristic	Fluid	Pressure range and pilot working pressure (bar)	Temperature °C	Weight (gr.)
	Filtered air, with or without lubrication	2,5 - 7	-5 - +50	174

Right Endplates

Ordering code

2240.03.Ⓒ

	CONNECTIONS
Ⓒ	00 = Exhaust electrical connection closed
	25P = Connectors 25 poles PNP

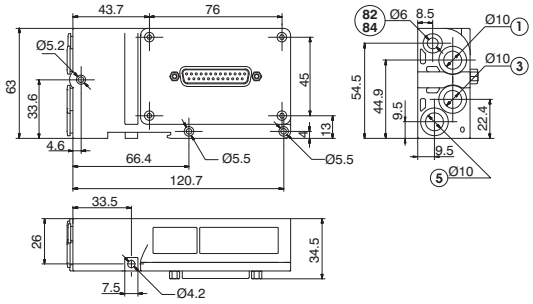

PORT 82/84= DO NOT PRESSURIZE, SOLENOID PILOTS EXHAUST

Operational characteristic	Fluid	Pressure range (bar)	Temperature °C	Weight (gr.)
	Filtered air, with or without lubrication	From vacuum to 10	-5 - +50	174

Closing plate

Ordering code

2240.00

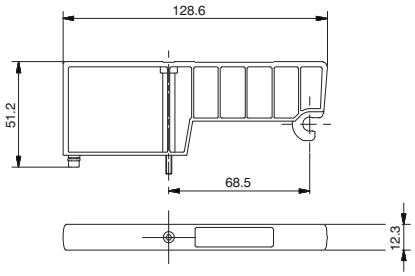

SHORT FUNCTION CODE "T"

Operational characteristic	Fluid	Pressure range (bar)	Temperature °C	Weight (gr.)
	Filtered air, with or without lubrication	From vacuum to 10	-5 - +50	30

2

Intermediate Inlet/Exhaust module

Ordering code
2240.10

SHORT FUNCTION CODE "W"

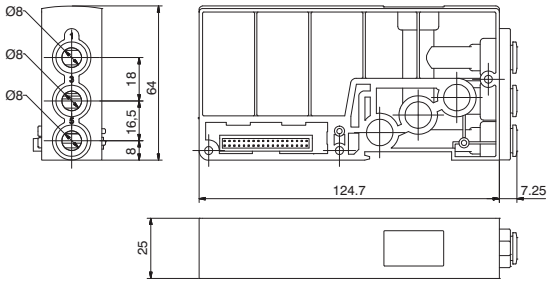

Operational characteristic	Fluid	Pressure range (bar)	Temperature °C	Weight (gr.)
	Filtered air, with or without lubrication	From vacuum to 10	-5 - +50	105

Modular base (2 places) Quick fitting tube Ø4

Ordering code	
2244.FV	
	FUNCTION
F	01=Opened port
	06=Separated ports
	07=Port 1 separated
	08=Ports 3-5 separated
	VERSION
V	M=Monostable
	B=Bistable

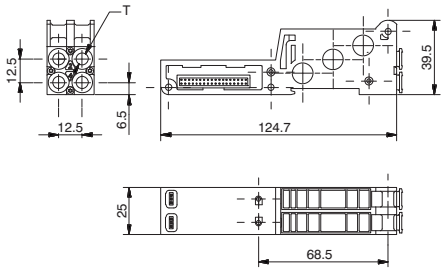

SHORT FUNCTION CODE "3" (Monostable) Opened ports
SHORT FUNCTION CODE "36" (Monostable) Separated ports
SHORT FUNCTION CODE "37" (Monostable) port 1 separated
SHORT FUNCTION CODE "38" (Monostable) Ports 3-5 separated

SHORT FUNCTION CODE "4" (Bistable) Opened ports
SHORT FUNCTION CODE "46" (Bistable) Separated ports
SHORT FUNCTION CODE "47" (Bistable) Port 1 separated
SHORT FUNCTION CODE "48" (Bistable) Ports 3-5 separated

Operational characteristic	Fluid	Flow rate at 6 bar with Δp=1 (Nl/min)	Pressure range (bar)	Temperature °C	Weight (gr.)
	Filtered air, with or without lubrication	140	From vacuum to 10	-5 - +50	75

Modular base (2 places) Quick fitting tube Ø6

Ordering code	
2246.FV	
	FUNCTION
F	01=Opened port
	06=Separated ports
	07=Port 1 separated
	08=Ports 3-5 separated
	VERSION
V	M=Monostable
	B=Bistable

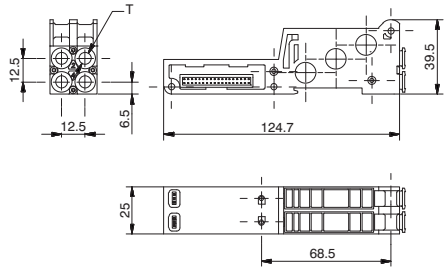

SHORT FUNCTION CODE "5" (Monostable) Opened ports
SHORT FUNCTION CODE "56" (Monostable) Separated ports
SHORT FUNCTION CODE "57" (Monostable) Port 1 separated
SHORT FUNCTION CODE "58" (Monostable) Ports 3-5 separated

SHORT FUNCTION CODE "6" (Bistable) Opened ports
SHORT FUNCTION CODE "66" (Bistable) Separated ports
SHORT FUNCTION CODE "67" (Bistable) Port 1 separated
SHORT FUNCTION CODE "68" (Bistable) Ports 3-5 separated

Operational characteristic	Fluid	Flow rate at 6 bar with Δp=1 (Nl/min)	Pressure range (bar)	Temperature °C	Weight (gr.)
	Filtered air, with or without lubrication	400	From vacuum to 10	-5 - +50	75

Modular base (2 places) Quick fitting tube Ø8

Ordering code	
2248.FV	
	FUNCTION
F	01=Opened port
	06=Separated ports
	07=Port 1 separated
	08=Ports 3-5 separated
	VERSION
V	M=Monostable
	B=Bistable

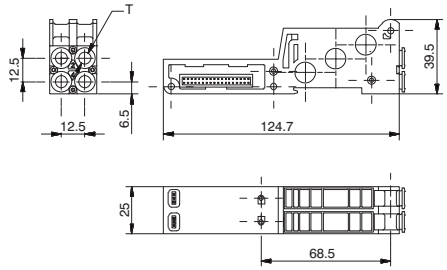

SHORT FUNCTION CODE "7" (Monostable) Opened ports
SHORT FUNCTION CODE "76" (Monostable) separated ports
SHORT FUNCTION CODE "77" (Monostable) Port 1 separated
SHORT FUNCTION CODE "78" (Monostable) Ports 3-5 separated

SHORT FUNCTION CODE "8" (Bistable) Opened ports
SHORT FUNCTION CODE "86" (Bistable) Sepatared ports
SHORT FUNCTION CODE "87" (Bistable) Port 1 separated
SHORT FUNCTION CODE "88" (Bistable) Ports 3-5 separated

Operational characteristic	Fluid	Flow rate at 6 bar with Δp=1 (Nl/min)	Pressure range (bar)	Temperature °C	Weight (gr.)
	Filtered air, with or without lubrication	550	From vacuum to 10	-5 - +50	75

Cable complete with connector, 25 Poles IP65

Ordering code

2300.25.L.P

L	CABLE LENGTH
	03 = 3 meters
	05 = 5 meters
	10 = 10 meters
P	CONNECTORS
	10 = In line
	90 = 90° Angle

Cable complete with connector, 37 Poles IP65

Ordering code

2400.37.L.P

L	CABLE LENGTH
	03 = 3 meters
	05 = 5 meters
	10 = 10 meters
P	CONNECTORS
	10 = In line
	90 = 90° Angle

Cable complete with connector, 25 Poles IP65

Ordering code

2400.25.L.25

L	CABLE LENGTH
	03 = 3 meters
	05 = 5 meters
	10 = 10 meters

Polyethylene Silencer Series SPL-R

Ordering code

SPLR.F

F	TUBE DIAMETER
	6 = 6 mm
	10 = 10 mm

Diaphragm plug

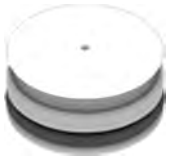

Ordering code

2230.17

Weight gr. 6,5

Nut

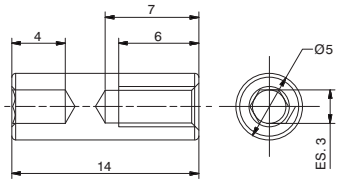

Ordering code

2240.KD.00

The Kit includes 6 pieces

Tie-rod M3

Ordering code

2240.KT.P

P	N. POSITIONS
	02=Nr. 2 Position
	04=Nr. 4 Positions
	06=Nr. 6 Positions
	08=Nr. 8 Positions
	10=Nr. 10 Positions
	12=Nr. 12 Positions
	14=Nr. 14 Positions
	16=Nr. 16 Positions
	18=Nr. 18 Positions
	20=Nr. 20 Positions
	22=Nr. 22 Positions
	24=Nr. 24 Positions
	26=Nr. 26 Positions
	28=Nr. 28 Positions
	30=Nr. 30 Positions
	32=Nr. 32 Positions

The Kit includes 3 pieces

CODE LIST

Description	"L" Dimension
2240.KT.02	68 mm
2240.KT.04	93mm
2240.KT.06	118mm
2240.KT.08	143mm
2240.KT.10	168mm
2240.KT.12	193mm
2240.KT.14	218mm
2240.KT.16	243mm
2240.KT.18	268mm
2240.KT.20	293mm
2240.KT.22	318mm
2240.KT.24	343mm
2240.KT.26	368mm
2240.KT.28	393mm
2240.KT.30	418mm
2240.KT.32	443mm

Accessories table for manifolds

Set of N° positions	Ordering code
2	2240.KD.00 + 2240.KT.02
4	2240.KD.00 + 2240.KT.04
6	2240.KD.00 + 2240.KT.06
8	2240.KD.00 + 2240.KT.08
10	2240.KD.00 + 2240.KT.10
12	2240.KD.00 + 2240.KT.12
14	2240.KD.00 + 2240.KT.14
16	2240.KD.00 + 2240.KT.16
18	2240.KD.00 + 2240.KT.18
20	2240.KD.00 + 2240.KT.20
22	2240.KD.00 + 2240.KT.22
24	2240.KD.00 + 2240.KT.24
26	2240.KD.00 + 2240.KT.26
28	2240.KD.00 + 2240.KT.28
30	2240.KD.00 + 2240.KT.30
32	2240.KD.00 + 2240.KT.32

2240.KD.00

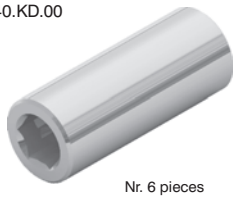

Nr. 6 pieces

2240.KT.XX

Nr. 3 pieces

2

General :

Using the 2240.03.25P output terminal it is possible to make any electrical signals not used by valves available on a 25 sub-D female connector at the right end of the manifold.
It is possible to then join a multi-core cable to link to the next manifold, or connect directly to one or two I/O modules.
The I/O modules can accept input or output signals, depending upon what is connected.

Ordering code

2240.08S

Please note: If the manifold is connected by a multi-core connection, each connection can be used as either an input or an output, while if the manifold is connected to a serial node the connections can only be used as an output.

It is possible to connect the manifold to up to two I/O modules.

Each I/O module includes 8 diagnostic LEDs which indicate the presence of an Input / Output signal for each connector.

Please note: For an LED to function, a signal of at least +15VDC must be present on pin 4 of the connector. If this signal is lower, the LED will not light, this does not compromise the normal Input / Output function of the unit.

Overall dimensions and I/O layout:

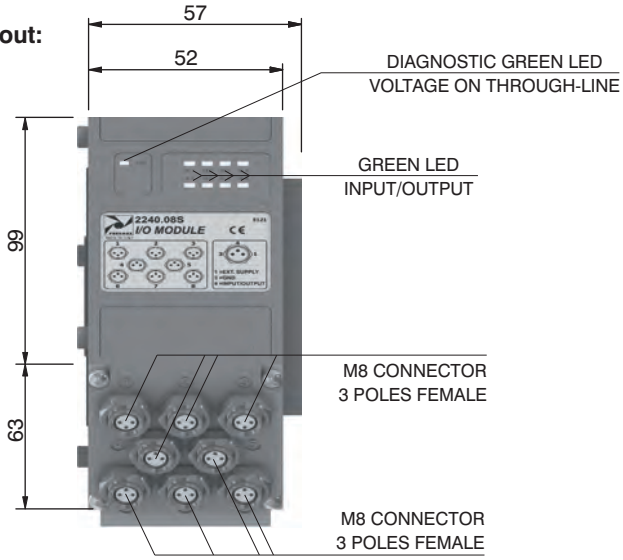

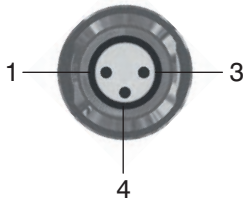

PIN	DESCRIPTION
1	+24 VDC
4	INPUT/OUTPUT
3	GND

Input features:

Each connection can accept either two wire (switches, magnetic switches, pressure switches, etc.) or three wire connections (photocells, electronic end of stroke sensors, etc.) if +24VDC is required on at Pin 1 of each connector, it is possible to provide this via the through-line pin of the multi-pole connector.
I.E :
Pin 25 of the 25 pin multi-pole connector (code 2240.02.25P or 2240.12.25P)
Pin 36-37 of the 37 pin multi-pole connector (code 2240.02.37P or 2240.12.37P)

Output features:

Attention: The output connections are not protected against short-circuit. Please pay attention when wiring (avoid Pin 4 being connected to Pin 3 or Pin 1).

	Model	2240.08S
	Case	Reinforced technopolymer
General characteristics	I/O Connector	M8 connector 3 poles female (IEC 60947-5-2)
	PIN 1 voltage (connector used as Input)	by the user
	PIN 4 voltage diagnosis	Green Led
	Node consumption (Outlets excluded)	7mA per each LED with 24 VDC signal
	Outlets voltage	+23,3 VDC (serial) /by the user (multipolar)
	Input voltage	Depend by the using
	Maximum outlet current	100 mA (serial) / 400 mA (multipolar)
	Maximum Input/Output	8 per module
	Multiconnector max. Current	100 mA
	Connections to manifold	Direct connection to 25 poles connector
	Maximum n. of moduls	2
	Protection degree	IP65 when assembled
	Ambient temperature	from -0° to +50° C

CORRESPONDENCE BETWEEN MULTI-POLE SIGNAL AND CONNECTOR

SUB-D TYPE 37 POLE MALE CONNECTOR

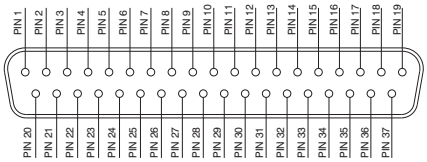

1 - 32 = SIGNALS
33 - 35 = GND
36 - 37 = THROUGH LINE

SUB-D TYPE 25 POLE MALE CONNECTOR

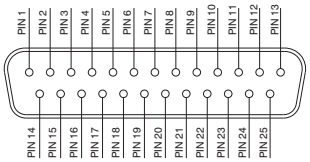

1 - 22 = SIGNALS
23 - 24 = GND
25 = THROUGH LINE

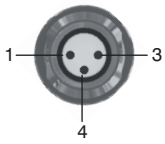

PIN	DESCRIPTION
1	THROUGH LINE
4	SIGNAL
3	GND

Connection modes:

The I/O module changes it is operation depending on the way the manifold is controlled. There are two possible modes:

A) Control via multi-pole connection
B) Control via fieldbus

In order to use the I/O module, the correct right hand endplate with 25 pole female outlet connector must be used. (Code 2240.03.25P).

A) Control via multi-pole :

M8 connector used as Input:

Attention: Voltage applied to each connector is passed to multi-pole connector pin.

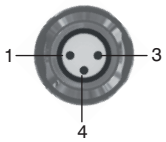

PIN	DESCRIPTION
1	THROUGH LINE
4	SIGNAL
3	GND

M8 connector used as Output:

Output voltage will the same as is applied at the multi-pole connector pin.
The maximum output current depends upon the power unit used, but we recommend no more than 250mA.

Attention: Since every cable has a degree of resistance, there will always be a voltage drop depending on the cable's length, sectional area and the current.

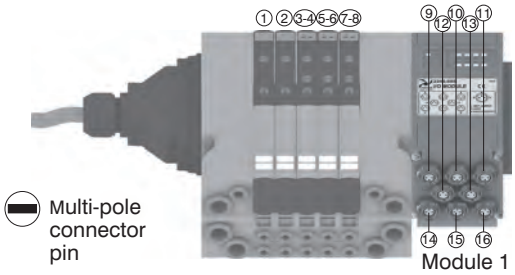

Attention: Only one more I/O module can be added.

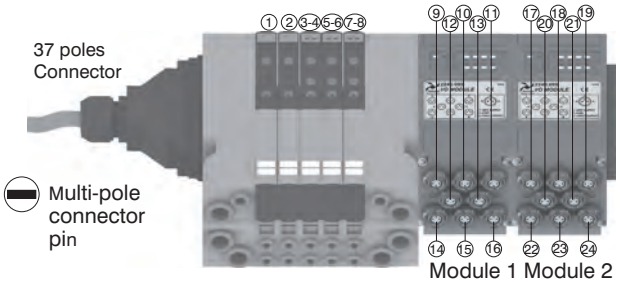

Attention: No more additions are possible

Attention : Optyma 32-**S** solenoid valve manifolds permit up to 22 electrical signals that are not used by manifolds to be made available: these signals can be managed by another manifold and / or by I/O modules.
The I/O module will manage these unused signals. Connections that are not managing useful signals will remain unconnected.

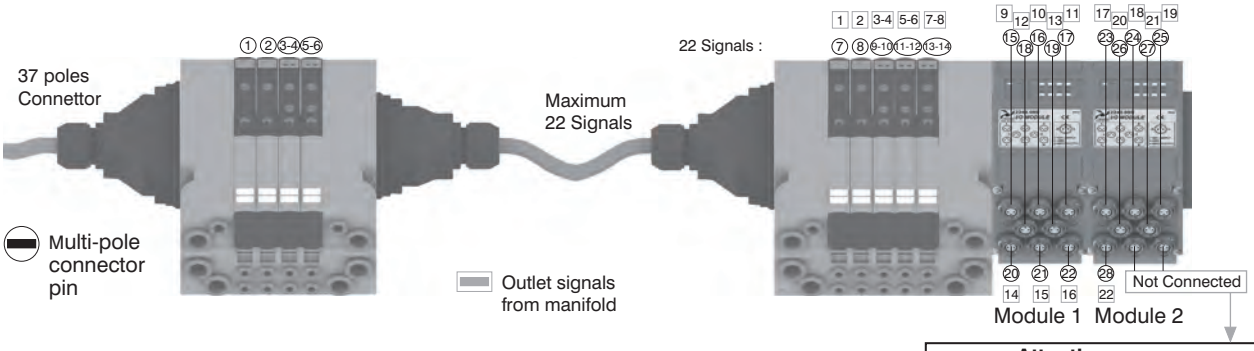

Please note: this example considers a 37 pin multi-pole connector.
The same configuration managed by a 25 pin multi-pole connector will stop at number 22 of multi-pole connector and at number 17 of the manifold. 22 16

Attention:
Signal Not connected
GND Connected
Through line Connected

2

Please note: Optyma 32-S solenoid valve manifolds manage up to 32 signals. If the manifold uses more than 24 signals the I/O module will manage only the remainder. Connections that are not managing useful signals will remain unconnected.

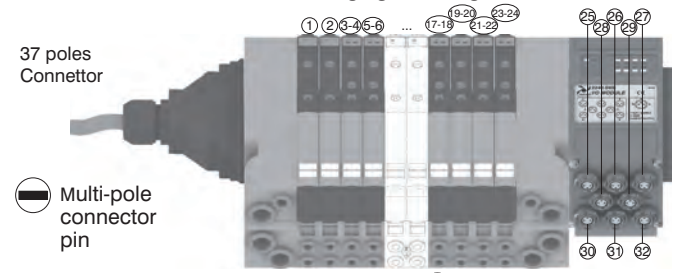

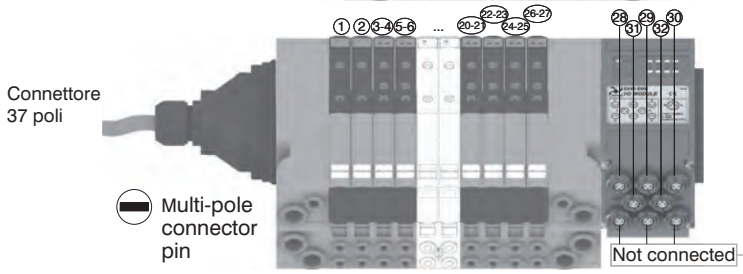

Attention:
Signal Not connected
GND Connected
Through line Connected

B) Control via fieldbus:

With this kind of control the I/O module can only be used as an output. Pin 1 of each connector is not connected. The output voltage will be 0.7V lower than that applied to Pin 4 of the connector.
The maximum output current for each output is 100mA. Te correspondence between control byte and each single output depends on how many electrical signals are used by the manifold and by the relative position of the I/O module.

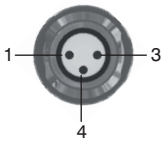

PIN	DESCRIPTION
1	NOT CONNECTED
4	SIGNAL
3	GND

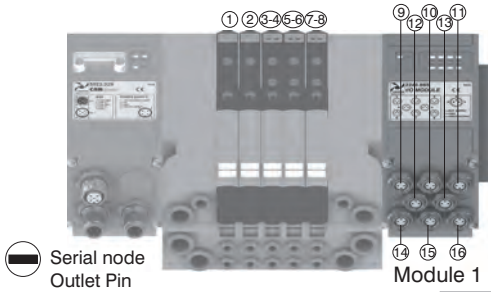

Attention:
Output only

Attention:
Only one more
I/O module
can be added.

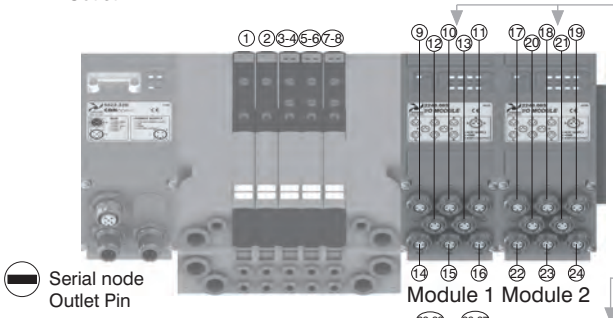

Attention:
Output only

Attention:
No more additions
are possible

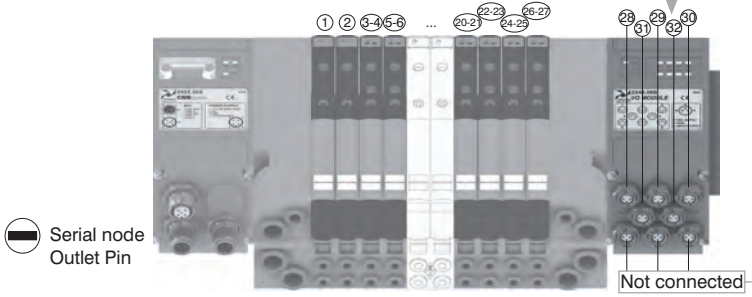

Attention:
Output only

Attention:
Signal Not connected
GND Connected

Please note: I/O modules don't allow to connect any additional valves manifold after them.

Attention:
Output only

Attention:
No more additions
are possible

Electrical connection

The electrical connection is made using a 37 pin connector and can manage up to 32 electrical signals. Alternatively a 25 pin connector can be used which is suitable for up to 22 electrical signals. The distributions of the electrical signals between sub-bases achieved thanks to a dedicated electrical connector positioned in each sun-base which diverts the signals needed to operate the solenoid pilots of the valve mounted on the sub-base and passing unused signals forward to the next base.

The Optyma-S sub-bases are designed to carry two valves and are available in the following configurations:

Sub-base configurations	Signals used for the single position	Total number of used signal
Sub-base for 2 bistable valves	2 signals used for the first position	**4**
	2 signals used for the second position	
Sub-base for 2 monostable valves	1 signal used for the first position	**2**
	1 signal used for the second position	

Sub-base for 2 bistable valves

On the sub base for 2 bistable valves the first electrical signal is used to actuate the solenoid pilot on side 14 of the first position, the second signal is used to actuate the solenoid pilot on side 12 of the first position. Each sub base uses 4 electric signals. The same layout applies to the following position therefore the third signal is used to actuate the solenoid pilot on side 14 of the second position and the fourth signal is used to actuate the solenoid pilot on side 12 of the second position.
The remaining signals are transferred downstream.
On a bistable sub base it is possible to mount both bistable or monostable valves (in the second case 1 electrical signal for each valve is wasted). This solutions enables the user to change the manifold layout without the need to re-configure the output correspondence on the PLC. The use of bistable sub-bases reduces the maximum number of valves that can be mounted on the manifold: If the 37 pole connector is used the maximum number of valves is 16 If the 25 pole connector is used the maximum number of valves is 10.

Sub-base for 2 monostable valves

On the sub base for 2 monostable valves the first electrical signal is used to actuate the solenoid pilot on side 14 of the first position, the second signal is used to actuate the solenoid pilot on side 12 of the second position. Each sub base uses 2 electric signals.
The remaining signals are transferred downstream. On a monostable sub base it is possible to mount only monostable valves (shoud a bistable valve be mounted on a monostable sub base it will not be possible to actuate the solenoid pilot on side 12). This solutions enables the user to maximise the manifold lay out using all the electrical signals available.

If the 37 pole connector is used the maximum number of valves is 32
If the 25 pole connector is used the maximum number of valves is 22

Note:
Monostable valves, which are fitted with only one solenoid pilot can be mounted on both monostable or bistable sub bases.
Bistable valves ,5/3; 2x3/2;2x2/2, which are fitted with 2 solenoid pilots and therefore always use two electrical signals must always be mounted on bistable subbases.

Additional exhaust and air supply modules:

The Additional exhaust and air supply module is fitted with a dedicated electrical connector which does not use any electric signal but simply carries forward all signals which have not been used by the valves mounted before it.
This enables its use in any position of the manifold.

Unused electrical signals

The electrical signals which have not been used in the manifold can be made available by using the end plate fitted with the 25 pole connector.
The number of electric signals available depends on the type of connector mounted on the inlet plate and on the number of signals used in the manifold:

37 pole Inlet connector : N. of outputs= 32 – used signals (max 22)
25 pole Inlet connector : N. of outputs= 22 – used signals

Here are some examples of possible configurations and the corresponding pin layout both on the inlet and end plate :

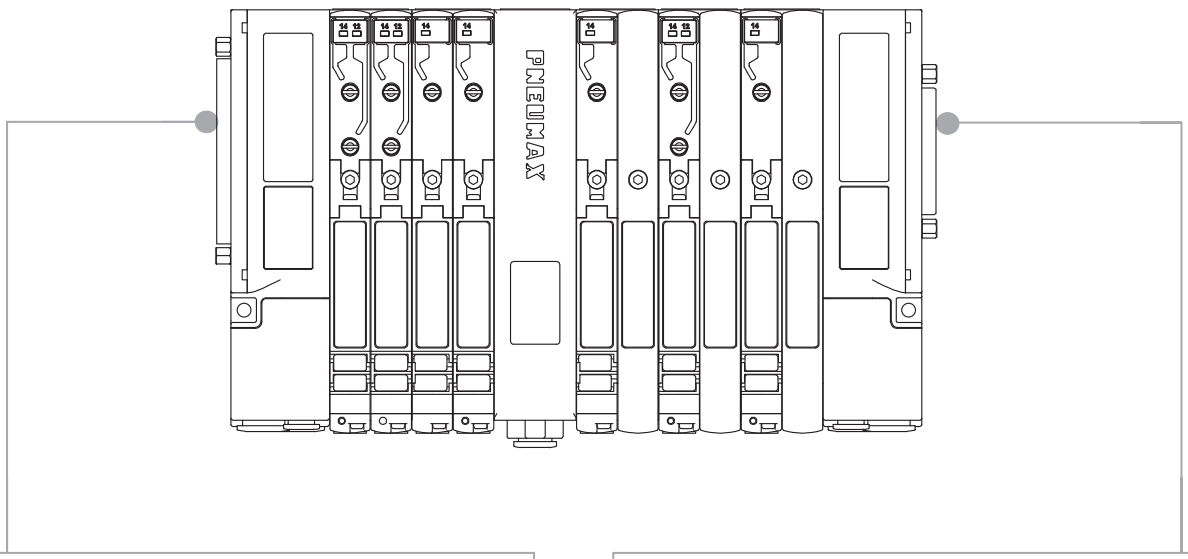

INLET ELECTRIC CONNECTIONS

SUB-D 37 POLE MALE CONNECTOR

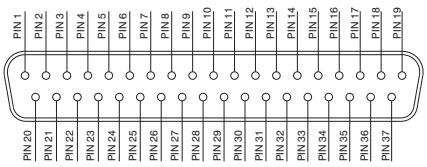

1 - 32 = Solenoid valves signals
33 - 35 = GND
36 - 37 = Through line

SUB-D 25 POLE MALE CONNECTOR

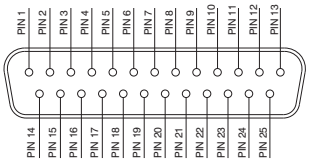

1 - 22 = Solenoid valves signals
23 - 24 = GND
25 = Through line

OUTLET ELECTRIC CONNECTIONS (IF PRESENT)

SUB-D 25 POLE FEMALE CONNECTOR

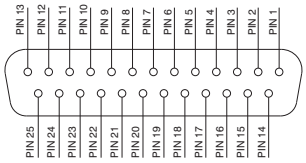

1 - 22 = Solenoid valves signals
23 - 24 = GND
25 = Through line

37 PIN Connector correspondence for valves assembled on mixed bases

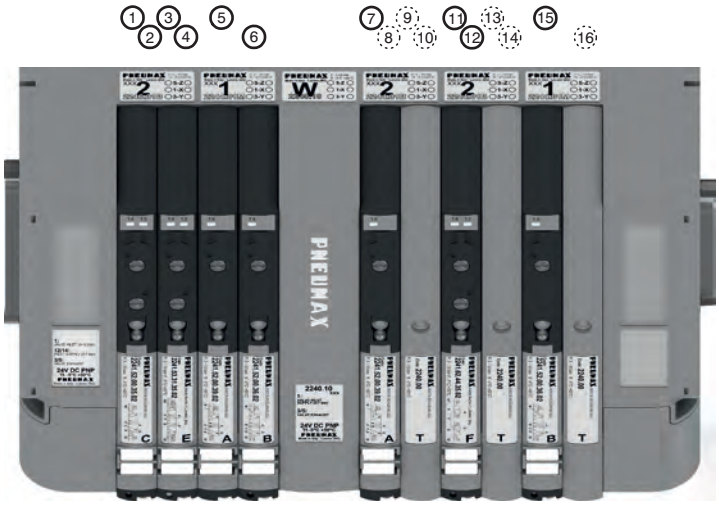

PIN 1 = PILOT 14 EV POS.1
PIN 2 = PILOT 12 EV POS.1
PIN 3 = PILOT 14 EV POS.2
PIN 4 = PILOT 12 EV POS.2
PIN 5 = PILOT 14 EV POS.3
PIN 6 = PILOT 14 EV POS.4
PIN 7 = PILOT 14 EV POS.6
PIN 8 = NOT CONNECTED
PIN 9 = NOT CONNECTED
PIN 10 = NOT CONNECTED
PIN 11 = PILOT 14 EV POS.8
PIN 12 = PILOT 12 EV POS.8
PIN 13 = NOT CONNECTED
PIN 14 = NOT CONNECTED
PIN 15 = PILOT 14 EV POS.10
PIN 16 = NOT CONNECTED

POS.	1	2	3	4	5	6	7	8	9	10	11

37 PIN Connector correspondence for manifold mounted on bases for bistable valves

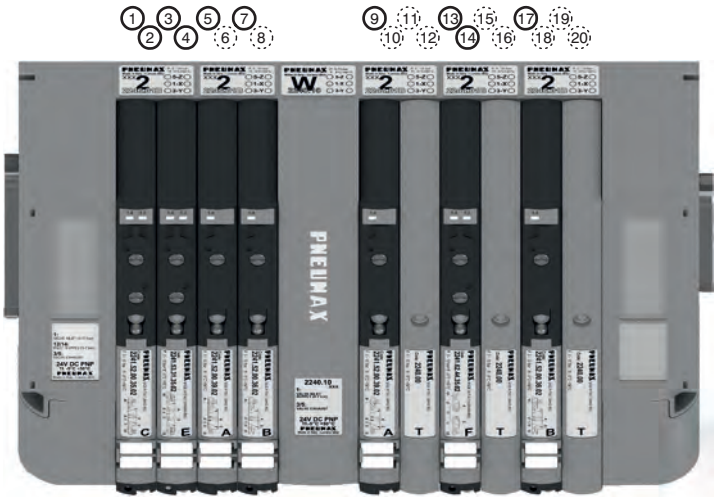

PIN 1 = PILOT 14 EV POS.1
PIN 2 = PILOT 12 EV POS.1
PIN 3 = PILOT 14 EV POS.2
PIN 4 = PILOT 12 EV POS.2
PIN 5 = PILOT 14 EV POS.3
PIN 6 = NOT CONNECTED
PIN 7 = PILOT 14 EV POS.4
PIN 8 = NOT CONNECTED
PIN 9 = PILOT 14 EV POS.6
PIN 10 = NOT CONNECTED
PIN 11 = NOT CONNECTED
PIN 12 = NOT CONNECTED
PIN 13 = PILOT 14 EV POS.8
PIN 14 = PILOT 12 EV POS.8
PIN 15 = NOT CONNECTED
PIN 16 = NOT CONNECTED
PIN 17 = PILOT 14 EV POS.10
PIN 18 = NOT CONNECTED
PIN 19 = NOT CONNECTED
PIN 20 = NOT CONNECTED

POS.	1	2	3	4	5	6	7	8	9	10	11

37 PIN Connector correspondence for manifold for 32 position manifold with monostable valves on double bases

37P

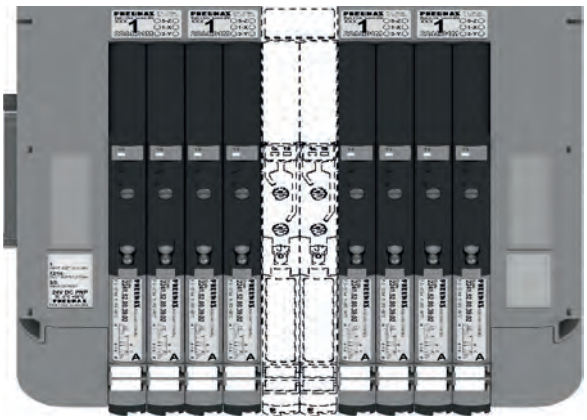

POS.	1	2	3	4	...	29	30	31	32

25P

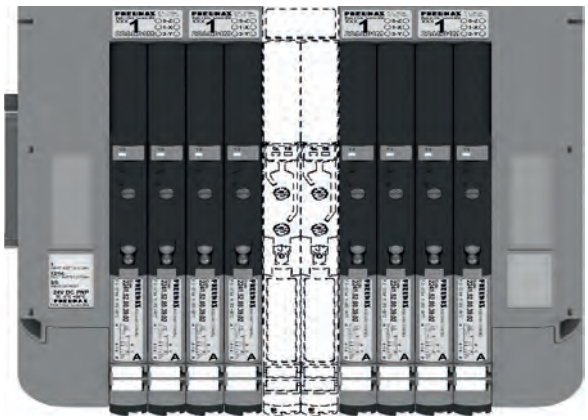

POS.	1	2	3	4	...	19	20	21	22

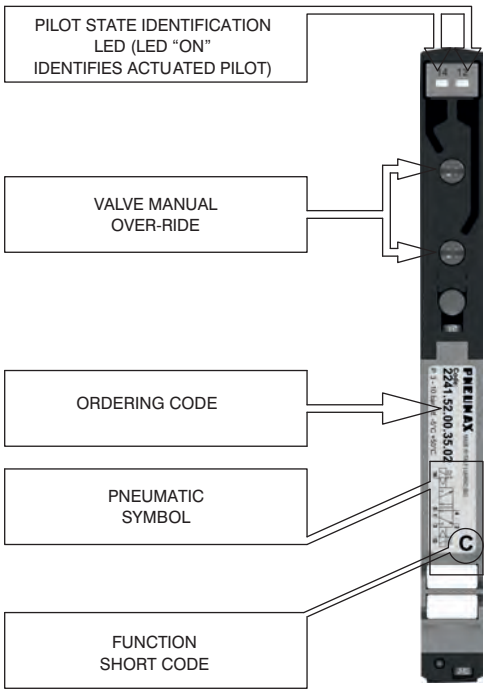

From the top

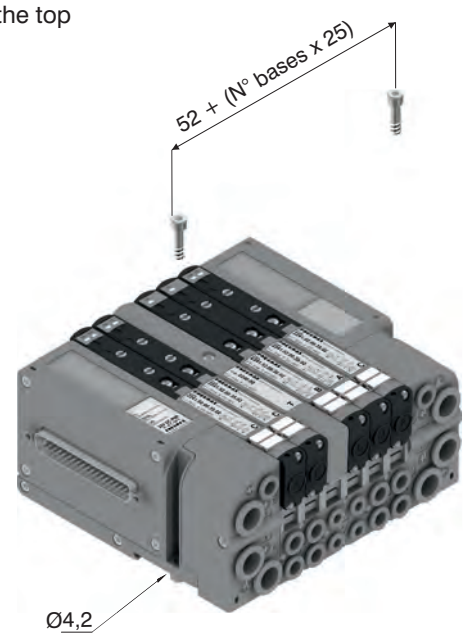

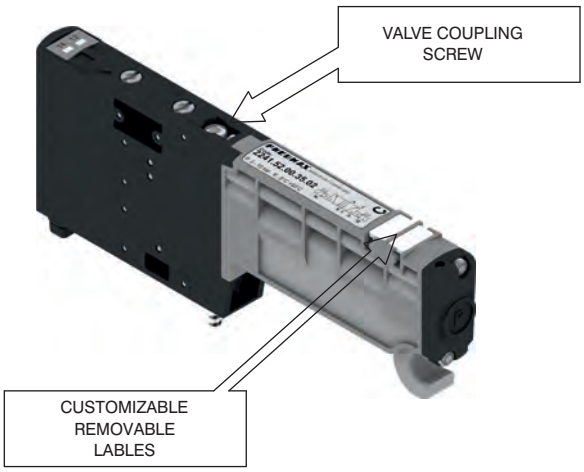

DIN rail fixing

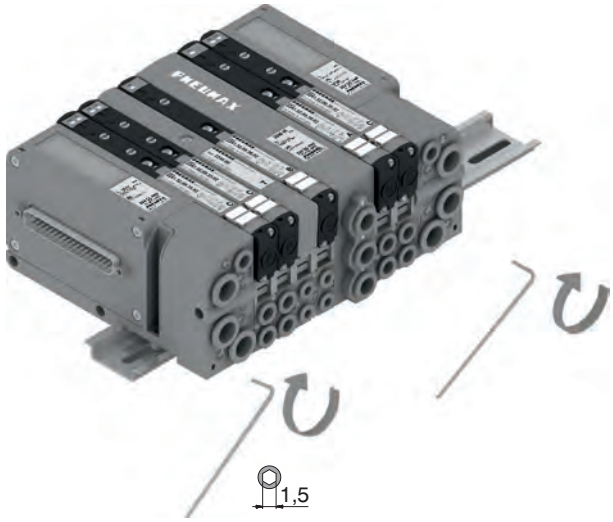

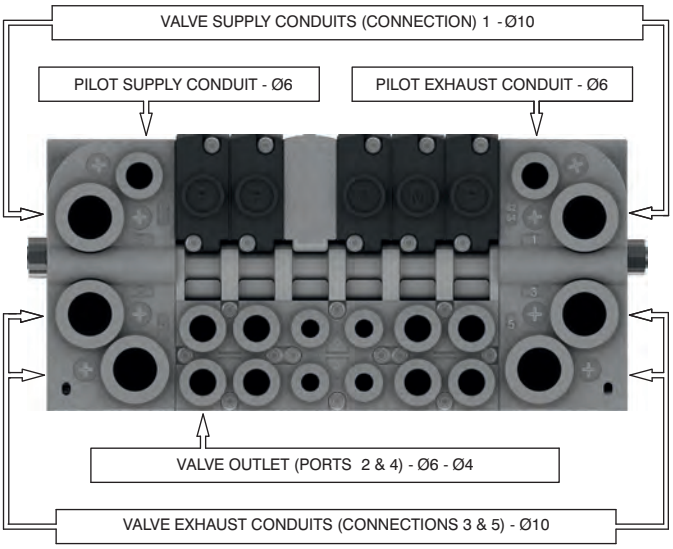

Maximum possible size
According to valves used

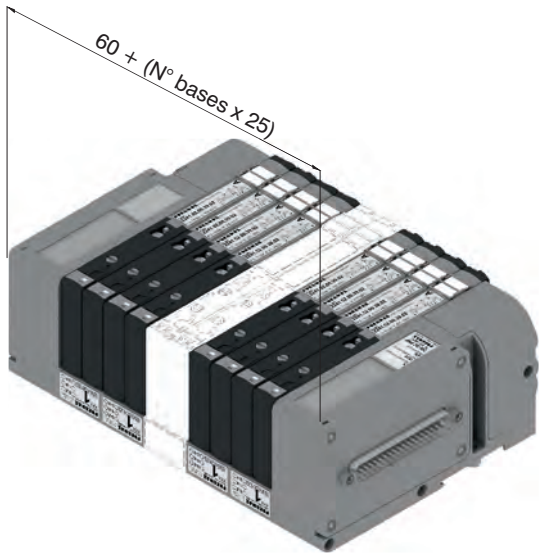

Manual override actuation

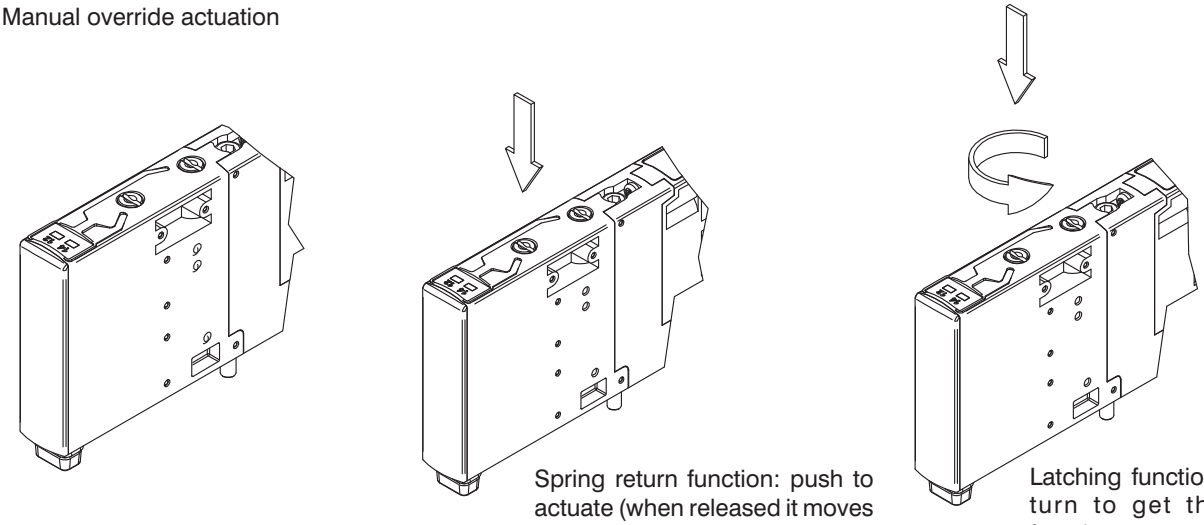

Spring return function: push to actuate (when released it moves back to the original position).

Latching function: push and turn to get the latching function

NOTE : It is strongly suggested to replace the original position after using

Valve Installation

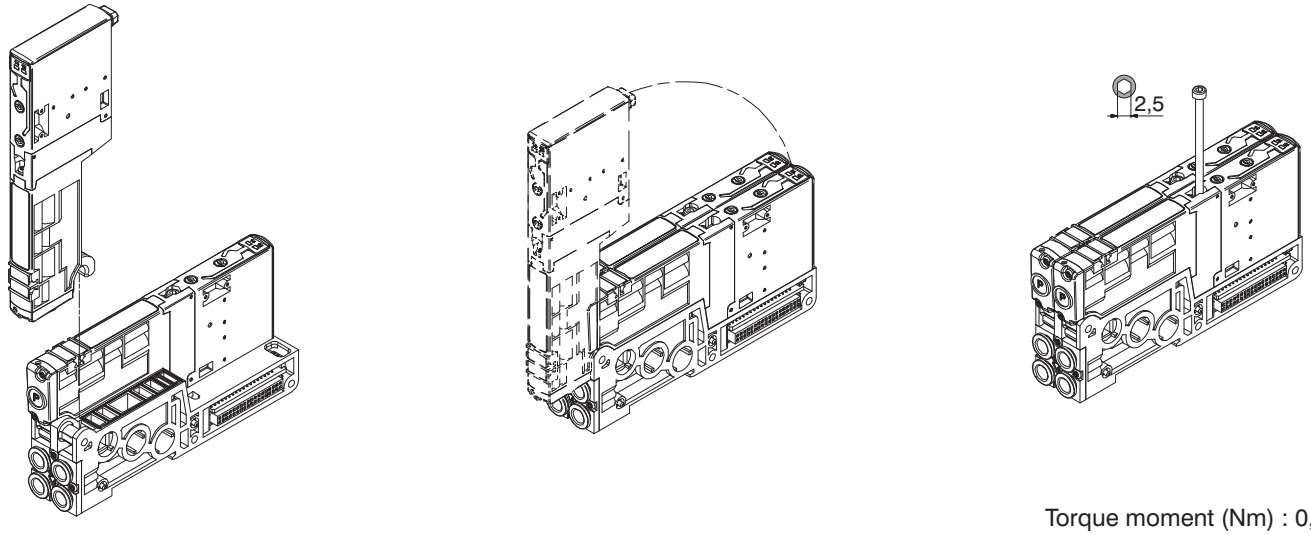

Torque moment (Nm) : 0,8

Manifold assembly

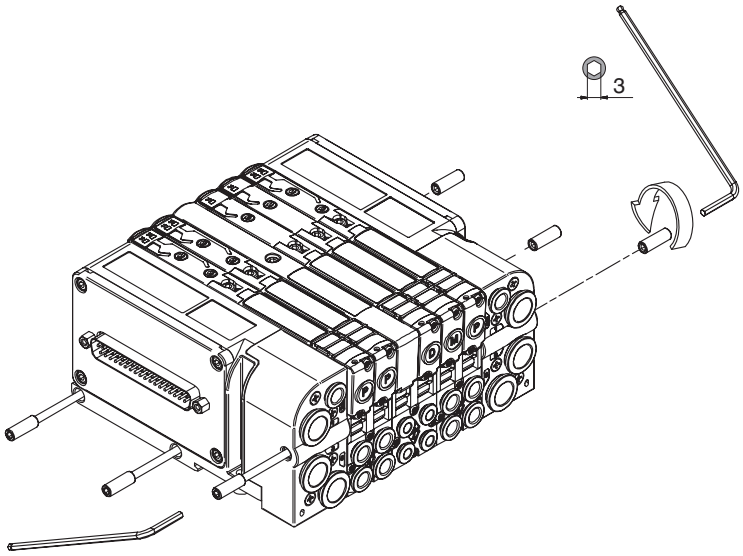

Min. torque moment : 2 Nm
Max. torque moment: 2,5 Nm

Manifold Layout configuration

MULTIPOINT CONNECTION

MP = PNP 24 V DC
MN = NPN 24 V DC
MA = 24 V AC

LEFT ENDPLATE

A2 = 25 poles - Self feeding
A3 = 37 poles - Self feeding
E2 = 25 poles - External feeding
E3 = 37 poles - External feeding

RIGHT ENDPLATE

U0 = Closed
U2 = 25 Poles
U3 = 37 Poles

I/O MODULE

M8
(Requires 25 poles right endplate)

S _ . _ . _ _ _ . . . _ _ _ . _ . _ _

MODUL CONFIGURATION

Sub-base type | Valve type

ACCESSORIES CONFIGURATION

SUB-BASE TYPE

3 = 2 Position Monostable sub base ø4 (2 electric signal used)
4 = 2 Position Bistable sub base ø4 (4 electric signals used)
5 = 2 Position Monostable sub base ø6 (2 electric signal used)
6 = 2 Position Bistable sub base ø6 (4 electric signals used)
7 = 2 Position Monostable sub base ø8 (2 electric signal used)
8 = 2 Position Bistable sub base ø8 (4 electric signals used)

VALVES TYPE

A = 5/2 Solenoid - Spring
B = 5/2 Solenoid - Differential
C = 5/2 Solenoid - Solenoid
E = 5/3 CC Solenoid - Solenoid

F = 2x3/2 NC-NC (= 5/3 OC) Solenoid - Solenoid
G = 2x3/2 NO-NO (= 5/3 PC) Solenoid - Solenoid
H = 2x3/2 NC-NO Solenoid - Solenoid
I = 2x3/2 NO-NC Solenoid - Solenoid

T = Free valve space plug

ACCESSORIES

W00 = Intermediate supply & exhaust module

0X0 = Diaphragm plug on pipe 1
00Y = Diaphragm plug on pipeE 3
Z00 = Diaphragm plug on pipe 5

0XY = Diaphragm plug on pipe 1 & 3
ZX0 = Diaphragm plug on pipe 5 & 1
Z0Y = Diaphragm plug on pipe 5 & 3
ZXY = Diaphragm plug on pipe 5,1 & 3

SUB-BASE VARIANTS

EMPTY = No variants (SUB-BASE STANDARD)

6 = Diaphragm Plug on pipe 1, 3 and 5
7 = Diaphragm Plug on pipe 1
8 = Diaphragm Plug on pipe 3 and 5

NOTE:
While configuring the manifold always be careful that the maximum number of electrical signals available is 32
The use of monostable valve mounted on a bistable base (2 electrical signals occupied for each position) causes the loss of one electric signal.
In this case the monostable valve can be replaced by a bistable valve without reconfiguring the PLC.
The diaphragms plugs are used to intercept the conduits 1,3 & 5 of the base.
Should one or more conduits be cut more than one time it is necessary to add the relevant intermediate Supply/Exhaust module.

Series 2200 OPTYMA-S solenoid valve manifolds managed by multipoint connection are "well tried components"

	Well-tried component	- The product is a well-tried product for a safety-related application according to ISO 13849-1. - The relevant basic and well-tried safety principles according ISO 13849-2 for this product are fulfilled. - The suitability of the product for a precise application must be verified and confirmed by the user.
B_{10d}	50.000.000	

General:

CANopen® module is directly integrated on Optyma-S solenoid valves manifold via a 37 poles connector, normally used for multipolar cable connection.
Optyma-S solenoid valves connected to node must be PNP equivalent (final 02 in ordering code).
The node can be easily installed also on solenoid valves manifold already mounted on equipment.
Module can manage up to 32 solenoid valves, and, in the same time, a max number of 4 Input modules 5222.08S.
CANopen® module recognizes automatically the presence of the Input modules on power on.
Regardless of the number of Input modules connected, the managable solenoid valves are 32.
Node power supply is made by a M12 4P male circular connector.
The separation between node 24 VDC Power supply and outputs 24 VDC allows to switch off the outputs maintaning powered the node and inputs, if present.
Connection to Bus CANopen® is possible via 2 M12 5P male - female circular connectors; these two are connected in parallel and according to CiA Draft Recommendation 303-1 (V. 1.3 : 30 December 2004).
Transmission speed can be set by 3 dip-switches.
The node address can be set by 6 dip-switches using BCD numeration.
The module includes an internal terminating resistance that can be activated by a dip-switch.

Ordering code

5522.32S

Scheme / Overall dimensions and I/O layout :

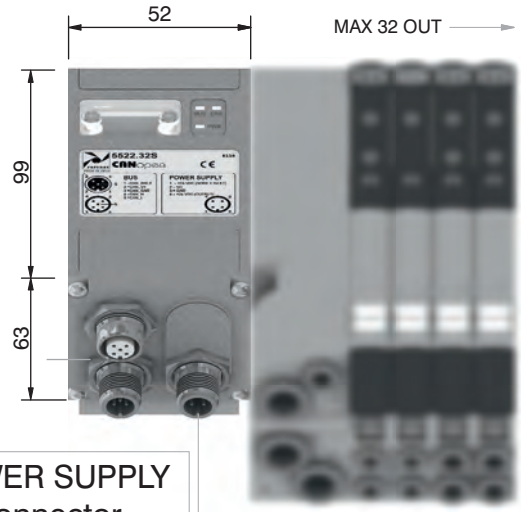

NETWORK connectors

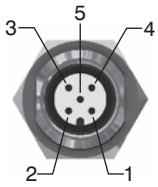

M12 5P FEMALE

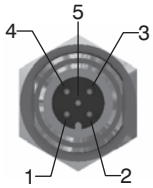

M12 5P MALE

PIN	SIGNAL	DESCRIPTION
1	CAN_SHLD	Optional CAN Shield
2	CAN_V+	Optional CAN external positive supply (Dedicated for supply of transceiver and Optocouplers, if galvanic isolation of the bus node applies)
3	CAN_GND	Ground / 0V / V-
4	CAN_H	CAN_H bus line (dominant high)
5	CAN_L	CAN_L bus line (dominant low)

POWER SUPPLY connector

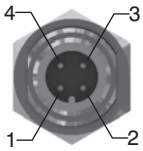

M15 4P MALE

PIN	DESCRIPTION
1	+24 VDC (NODE & INPUTS)
2	NC
3	GND
4	+24 VDC (OUTPUTS)

Technical characteristics

	Model	5522.32S
	Specifications	CiA Draft Standard Proposal 301 V 4.10 (15 August 2006)
	Case	Reinforced technopolymer
Power supply	Power supply connection	M12 4P male connector (IEC 60947-5-2)
	Power supply voltage	+24 VDC +/- 10%
	Node consumption (without inputs)	30 mA
	Power supply diagnosis	Green LED PWR
Outputs	PNP equivalent outputs	+24 VDC +/- 10%
	Maximum current for each output	100 mA
	Maximum output number	32
	Max output simultaneously actuated	32
Network	Network connectors	2 M12 5P connectors male-female Type A (IEC 60947-5-2)
	Baud rate	10 - 20 - 50 - 125 - 250 - 500 - 800 - 1000 Kbit/s
	Addresses, possible numbers	From 1 to 63
	Max nodes in net	64 (slave + master)
	Bus maximum recommended length	100 m at 500 Kbit/s
	Bus diagnosis	Green LED + Red LED
	Configuration file	Available from our web site: http://www.pneumaxspa.com
	IP protection grade	IP65 when assembled
	Temperature range	From 0° to +50° C

2

General:

DeviceNet module is directly integrated on Optyma-S solenoid valves manifold via a 37 poles connector, normally used for multipolar cable connection.
Optyma-S solenoid valves connected to node must be PNP equivalent (final 02 in ordering code).
The node can be easily installed also on solenoid valves manifold already mounted on equipment.
Module can manage up to 32 solenoid valves, and, in the same time, a max number of 4 Input modules 5222.08S.
DeviceNet module recognizes automatically the presence of the Input modules on power on.
Regardless of the number of Input modules connected, the managable solenoid valves are 32.
Node power supply is made by a M12 4P male circular connector.
The separation between node 24 VDC Power supply and outputs 24 VDC allows to switch off the outputs maintaning powered the node and inputs, if present.
Connection to Bus DeviceNet is possible via 2 M12 5P male - female circular connectors; these two are connected in parallel and according to DeviceNet Specifications Volume I, release 2.0.
Transmission speed can be set by 3 dip-switches.
The node address can be set by 6 dip-switches using BCD numeration.
The module includes an internal terminating resistance that can be activated by a dip-switch.

Ordering code

5422.32S

Scheme / Overall dimensions and I/O layout :

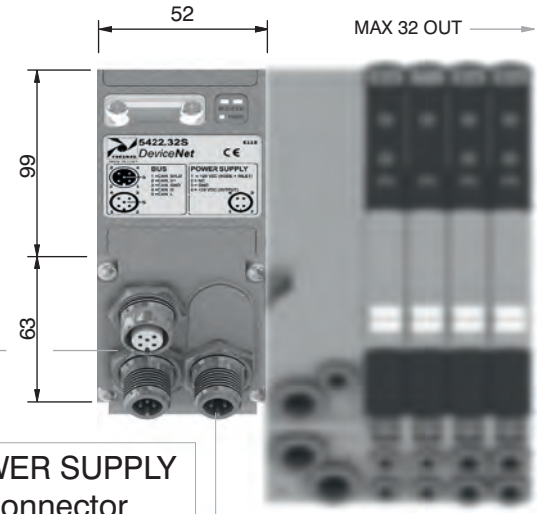

NETWORK connectors

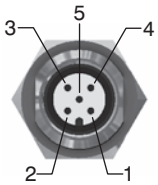

M12 5P FEMALE

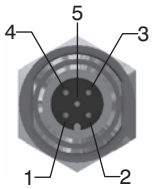

M12 5P MALE

PIN	SIGNAL	DESCRIPTION
1	CAN_SHLD	Optional CAN Shield
2	CAN_V+	Optional CAN external positive supply (Dedicated for supply of transceiver and Optocouplers, if galvanic isolation of the bus node applies)
3	CAN_GND	Ground / 0V / V-
4	CAN_H	CAN_H bus line (dominant high)
5	CAN_L	CAN_L bus line (dominant low)

POWER SUPPLY connector

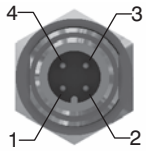

M12 4P MALE

PIN	DESCRIPTION
1	+24 VDC (NODE & INPUTS)
2	NC
3	GND
4	+24 VDC (OUTPUTS)

Technical characteristics

	Model	5422.32S
	Specifications	DeviceNet Specifications Volume I, release 2.0.
	Case	Reinforced technopolymer
Power supply	Power supply connection	M12 4P male connector (IEC 60947-5-2)
	Power supply voltage	+24 VDC +/- 10%
	Node consumption (without inputs)	30 mA
	Power supply diagnosis	Green LED PWR
Outputs	PNP equivalent outputs	+24 VDC +/- 10%
	Maximum current for each output	100 mA
	Maximum output number	32
	Max output simultaneously actuated	32
Network	Network connectors	2 M12 5P connectors male-female Type A (IEC 60947-5-2)
	Baud rate	125 - 250 - 500 Kbit/s
	Addresses, possible numbers	From 1 to 63
	Max nodes in net	64 (slave + master)
	Bus maximum recommended length	100 m at 500 Kbit/s
	Bus diagnosis	Green LED + Red LED
	Configuration file	Available from our web site: http://www.pneumaxspa.com
	IP protection grade	IP65 when assembled
	Temperature range	From 0° to +50° C

General:

PROFIBUS DP module is directly integrated on Optyma-S solenoid valves manifold via a 37 poles connector, normally used for multipolar cable connection.
Optyma-S solenoid valves connected to node must be PNP equivalent (final 02 in ordering code).
The node can be easily installed also on solenoid valves manifold already mounted on equipment.
Module can manage up to 32 solenoid valves, and, in the same time, a max number of 4 Input modules 5222.08S.
PROFIBUS DP module recognizes automatically the presence of the Input modules on power on.
Regardless of the number of Input modules connected, the managable solenoid valves are 32.
Node power supply is made by a M12 4P male circular connector.
The separation between node 24 VDC Power supply and outputs 24 VDC allows to switch off the outputs maintaning powered the node and inputs, if present.
Connection to Bus PROFIBUS DP is possible via 2 M12 type B 5P male - female circular connectors; these two are connected in parallel and according to PROFIBUS Interconnection Technology (Version 1.1 : August 2001).
The node address can be set using BCD numeration: 4 dip-switches for the units and 4 dip-switches for the tens.
The module includes an internal terminating resistance that can be activated by a dip-switch.

Ordering code

5322.32S

Scheme / Overall dimensions and I/O layout :

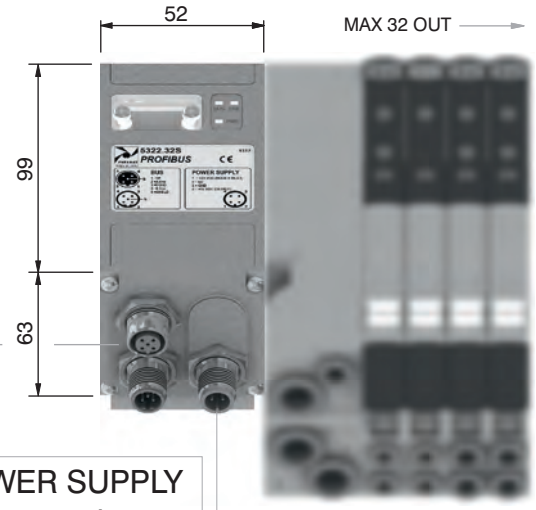

NETWORK connectors

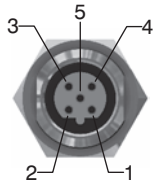

M12 5P FEMALE

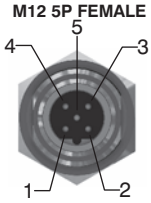

M12 5P MALE

PIN	SIGNAL	DESCRIPTION
1	VP	Power supply plus, (P5V)
2	A-line	Receive / Transmit data -N, A-line
3	DGND	Data Ground (reference potential to VP)
4	B-line	Receive / Transmit data -plus, B-line
5	SHIELD	Shield or PE

POWER SUPPLY connector

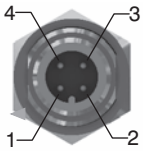

M12 4P MALE

PIN	DESCRIPTION
1	+24 VDC (NODE & INPUTS)
2	NC
3	GND
4	+24 VDC (OUTPUTS)

Technical characteristics

	Model	5322.32S
	Specifications	PROFIBUS DP
	Case	Reinforced technopolymer
Power supply	Power supply connection	M12 4P male connector (IEC 60947-5-2)
	Power supply voltage	+24 VDC +/- 10%
	Node consumption (without inputs)	50 mA
	Power supply diagnosis	Green LED PWR
Outputs	PNP equivalent outputs	+24 VDC +/- 10%
	Maximum current for each output	100 mA
	Maximum output number	32
	Max output simultaneously actuated	32
Network	Network connectors	2 M12 5P male-female connectors Type B
	Baud rate	9,6 - 19,2 - 93,75 - 187,5 - 500 - 1500 - 3000 - 6000 - 12000 Kbit/s
	Addresses, possible numbers	From 1 to 99
	Max nodes in net	100 (slave + master)
	Bus maximum recommended length	100 m at 12 Mbit/s - 1200 m at 9,6 Kbit/s
	Bus diagnosis	Green LED + Red LED
	Configuration file	Available from our web site: http://www.pneumaxspa.com
	IP protection grade	IP65 when assembled
	Temperature range	From 0° to +50° C

2

General:

EtherCAT® module is directly integrated on Optyma-S solenoid valves manifold via a 37 poles connector, normally used for multipolar cable connection.
Optyma-S solenoid valves connected to node must be PNP equivalent (final 02 in ordering code).
The node can be easily installed also on solenoid valves manifold already mounted on equipment.
Module can manage up to 32 solenoid valves, and, in the same time, a max number of 4 Input modules 5222.08S.
The EtherCAT® module, regardless the number of Input module connected, reports to have connected 4 Input modules.
Regardless of the number of Input modules connected, the managable solenoid valves are 32.
Node power supply is made by a M12 4P male circular connector.
The separation between node 24 VDC Power supply and outputs 24 VDC allows to switch off the outputs maintaning powered the node and inputs, if present.
Connection to Bus EtherCAT® is possible via 2 M12 4P type D female circular connectors. These two connectors lead the signal to two different communication ports, so they are not connected in parallel.
The node address is assigned during configuration.
Note: 5700 series has a different configuration file from series 5600.

Ordering code

5722.32S.EC

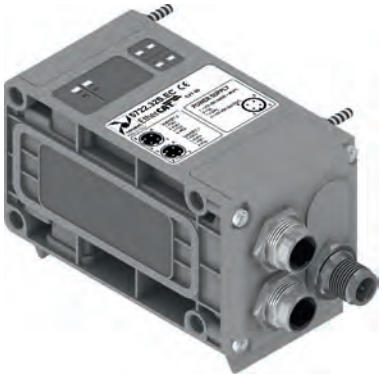

Scheme / Overall dimensions and I/O layout :

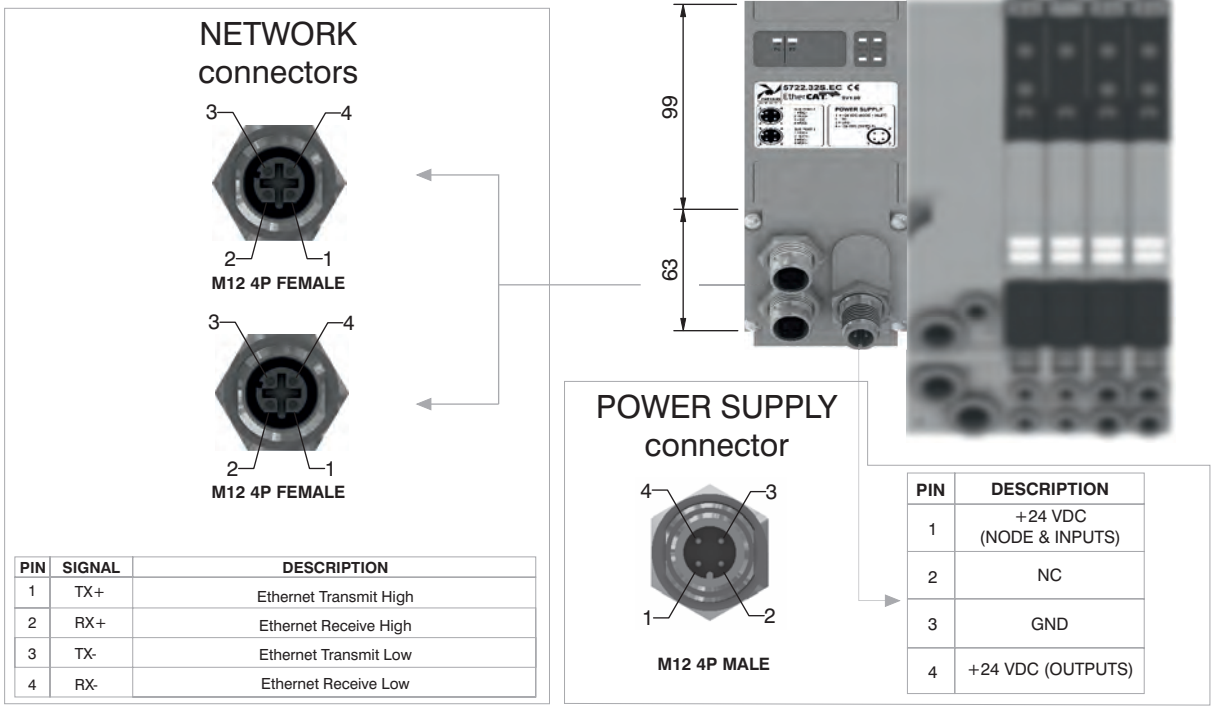

PIN	SIGNAL	DESCRIPTION
1	TX+	Ethernet Transmit High
2	RX+	Ethernet Receive High
3	TX-	Ethernet Transmit Low
4	RX-	Ethernet Receive Low

PIN	DESCRIPTION
1	+24 VDC (NODE & INPUTS)
2	NC
3	GND
4	+24 VDC (OUTPUTS)

Technical characteristics

	Model	5722.32S.EC
	Specifications	EtherCAT® Specifications ETG.1000 series
	Case	Reinforced technopolymer
Power supply	Power supply connection	M12 4P male connector (IEC 60947-5-2)
	Power supply voltage	+24 VDC +/- 10%
	Node consumption (without inputs)	400 mA
	Power supply diagnosis	Green LED PWR / Green LED OUT
Outputs	PNP equivalent outputs	+24 VDC +/- 10%
	Maximum current for each output	100 mA
	Maximum output number	32
	Max output simultaneously actuated	32
Network	Network connectors	2 M12 4P female connectors Type D (IEC 61076-2-101)
	Baud rate	100 Mbit/s
	Addresses, possible numbers	From 1 to 65535
	Max nodes in net	65536 (Master + Slave)
	Maximum distance between 2 nodes	100 m
	Bus diagnosis	1 green and 1 red LED for status + 2 LEDs for link & activity
	Configuration file	Available from our web site: http://www.pneumaxspa.com
	IP protection grade	IP65 when assembled
	Temperature range	From 0° to +50° C

General:

PROFINET IO RT/IRT module is directly integrated on Optyma-S solenoid valves manifold via a 37 poles connector, normally used for multipolar cable connection.
Optyma-S solenoid valves connected to node must be PNP equivalent (final 02 in ordering code).
The node can be easily installed also on solenoid valves manifold already mounted on equipment.
Module can manage up to 32 solenoid valves, and, in the same time, a max number of 4 Input modules 5222.08S.
The PROFINET IO RT/IRT module, regardless the number of Input module connected, reports to have connected 8 Input modules.
Regardless of the number of Input modules connected, the managable solenoid valves are 32.
Node power supply is made by a M12 4P male circular connector.
The separation between node 24 VDC Power supply and outputs 24 VDC allows to switch off the outputs maintaning powered the node and inputs, if present.
Connection to Bus PROFINET IO RT/IRT is possible via 2 M12 4P type D female circular connectors. These two connectors lead the signal to two different communication ports, so they are not connected in parallel.
The node address is assigned during configuration.

Ordering code

5722.32S.PN

Scheme / Overall dimensions and I/O layout :

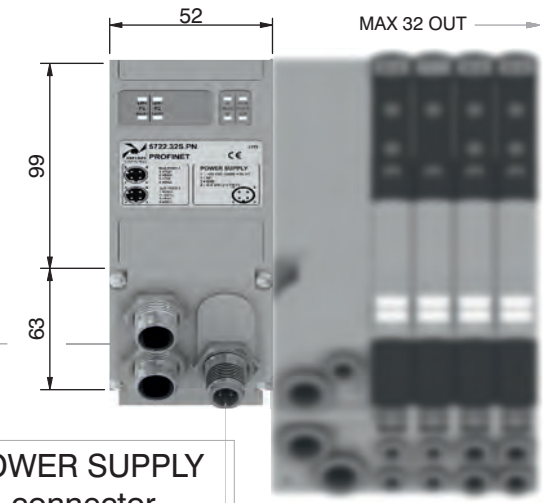

NETWORK connectors

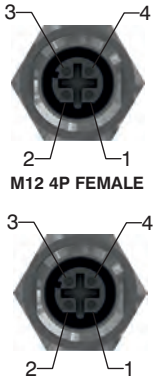

PIN	SIGNAL	DESCRIPTION
1	TX+	Ethernet Transmit High
2	RX+	Ethernet Receive High
3	TX-	Ethernet Transmit Low
4	RX-	Ethernet Receive Low

POWER SUPPLY connector

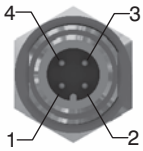

PIN	DESCRIPTION
1	+24 VDC (NODE & INPUTS)
2	NC
3	GND
4	+24 VDC (OUTPUTS)

Technical characteristics

	Model	5722.32S.PN
	Specifications	PROFINET IO RT/IRT
	Case	Reinforced technopolymer
Power supply	Power supply connection	M12 4P male connector (IEC 60947-5-2)
	Power supply voltage	+24 VDC +/- 10%
	Node consumption (without inputs)	400 mA
	Power supply diagnosis	Green LED PWR / Green LED OUT
Outputs	PNP equivalent outputs	+24 VDC +/- 10%
	Maximum current for each output	100 mA
	Maximum output number	32
	Max output simultaneously actuated	32
Network	Network connectors	2 M12 4P female connectors Type D (IEC 61076-2-101)
	Baud rate	100 Mbit/s
	Addresses, possible numbers	As an IP address
	Max nodes in net	As an Ethernet Network
	Maximum distance between 2 nodes	100 m
	Bus diagnosis	1 green and 1 red LED for status + 4 LEDs for link & activity
	Configuration file	Available from our web site: http://www.pneumaxspa.com
	IP protection grade	IP65 when assembled
	Temperature range	From 0° to +50° C

2

General:

EtherNet/IP module is directly integrated on Optyma-S solenoid valves manifold via a 37 poles connector, normally used for multipolar cable connection.
Optyma-S solenoid valves connected to node must be PNP equivalent (final 02 in ordering code).
The node can be easily installed also on solenoid valves manifold already mounted on equipment.
Module can manage up to 32 solenoid valves, and, in the same time, a max number of 4 Input modules 5222.08S.
The EtherNet/IP module, regardless the number of Input module connected, reports to have connected 8 Input modules.
Regardless of the number of Input modules connected, the managable solenoid valves are 32.
Node power supply is made by a M12 4P male circular connector.
The separation between node 24 VDC Power supply and outputs 24 VDC allows to switch off the outputs maintaning powered the node and inputs, if present.
Connection to Bus EtherNet/IP is possible via 2 M12 4P type D female circular connectors. These two connectors lead the signal to two different communication ports, so they are not connected in parallel.
The node address is assigned during configuration.

Ordering code

5722.32S.EI

Scheme / Overall dimensions and I/O layout :

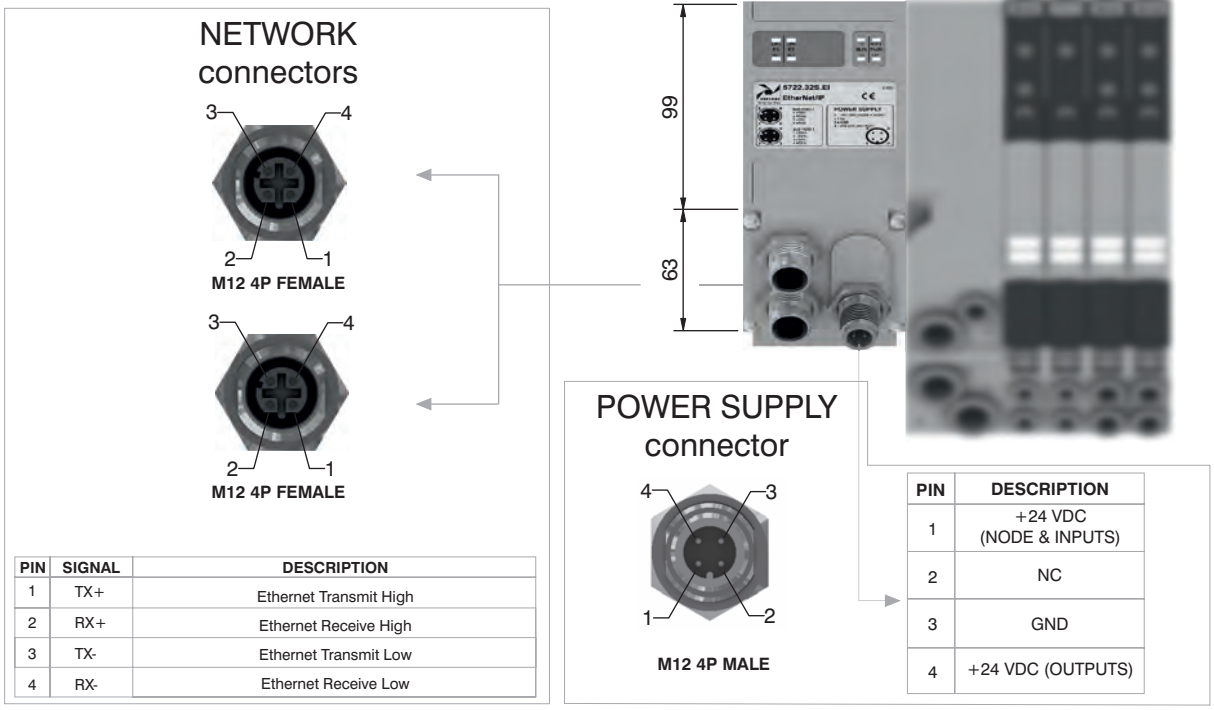

PIN	SIGNAL	DESCRIPTION
1	TX+	Ethernet Transmit High
2	RX+	Ethernet Receive High
3	TX-	Ethernet Transmit Low
4	RX-	Ethernet Receive Low

PIN	DESCRIPTION
1	+24 VDC (NODE & INPUTS)
2	NC
3	GND
4	+24 VDC (OUTPUTS)

Technical characteristics

	Model	5722.32S.EI
	Specifications	The EtherNet/IP Specification
	Case	Reinforced technopolymer
Power supply	Power supply connection	M12 4P male connector (IEC 60947-5-2)
	Power supply voltage	+24 VDC +/- 10%
	Node consumption (without inputs)	400 mA
	Power supply diagnosis	Green LED PWR / Green LED OUT
Outputs	PNP equivalent outputs	+24 VDC +/- 10%
	Maximum current for each output	100 mA
	Maximum output number	32
	Max output simultaneously actuated	32
Network	Network connectors	2 M12 4P female connectors Type D (IEC 61076-2-101)
	Baud rate	100 Mbit/s
	Addresses, possible numbers	As an IP address
	Max nodes in net	As an Ethernet Network
	Maximum distance between 2 nodes	100 m
	Bus diagnosis	1 green and 1 red LED for status + 4 LEDs for link & activity
	Configuration file	Available from our web site: http://www.pneumaxspa.com
	IP protection grade	IP65 when assembled
	Temperature range	From 0° to +50° C

General:

Powerlink module is directly integrated on Optyma-S solenoid valves manifold via a 37 poles connector, normally used for multipolar cable connection.
Optyma-S solenoid valves connected to node must be PNP equivalent (final 02 in ordering code).
The node can be easily installed also on solenoid valves manifold already mounted on equipment.
Module can manage up to 32 solenoid valves, and, in the same time, a max number of 4 Input modules 5222.08S.
The Powerlink module, regardless the number of Input module connected, reports to have connected 8 Input modules.
Regardless of the number of Input modules connected, the managable solenoid valves are 32.
Node power supply is made by a M12 4P male circular connector.
The separation between node 24 VDC Power supply and outputs 24 VDC allows to switch off the outputs maintaning powered the node and inputs, if present.
Connection to Bus Powerlink is possible via 2 M12 4P type D female circular connectors. These two connectors lead the signal to two different communication ports, so they are not connected in parallel.
The node address is assigned during configuration.

Ordering code

5722.32S.PL

Scheme / Overall dimensions and I/O layout :

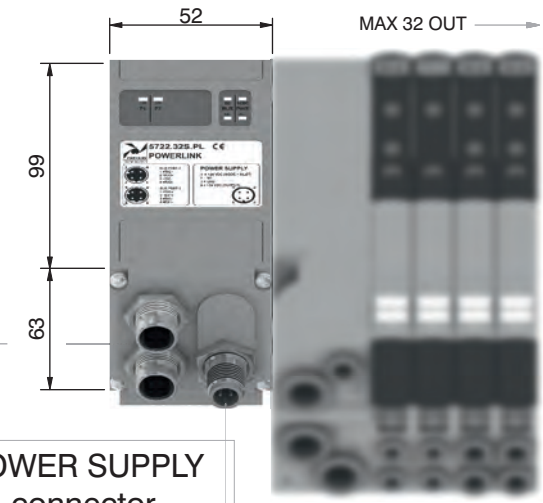

NETWORK connectors

M12 4P FEMALE

M12 4P FEMALE

PIN	SIGNAL	DESCRIPTION
1	TX+	Ethernet Transmit High
2	RX+	Ethernet Receive High
3	TX-	Ethernet Transmit Low
4	RX-	Ethernet Receive Low

POWER SUPPLY connector

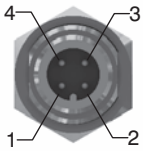

M12 4P MALE

PIN	DESCRIPTION
1	+24 VDC (NODE & INPUTS)
2	NC
3	GND
4	+24 VDC (OUTPUTS)

Technical characteristics

	Model	5722.32S.PL
	Specifications	Ethernet POWERLINK Communication Profile Specifications
	Case	Reinforced technopolymer
Power supply	Power supply connection	M12 4P male connector (IEC 60947-5-2)
	Power supply voltage	+24 VDC +/- 10%
	Node consumption (without inputs)	400 mA
	Power supply diagnosis	Green LED PWR / Green LED OUT
Outputs	PNP equivalent outputs	+24 VDC +/- 10%
	Maximum current for each output	100 mA
	Maximum output number	32
	Max output simultaneously actuated	32
Network	Network connectors	2 M12 4P female connectors Type D (IEC 61076-2-101)
	Baud rate	100 Mbit/s
	Addresses, possible numbers	239
	Max nodes in net	240
	Maximum distance between 2 nodes	100 m
	Bus diagnosis	1 green and 1 red LED for status + 2 LEDs for link & activity
	Configuration file	Available from our web site: http://www.pneumaxspa.com
	IP protection grade	IP65 when assembled
	Temperature range	From 0° to +50° C

2

General:

Modbus/TCP module is directly integrated on Optyma-S solenoid valves manifold via a 37 poles connector, normally used for multipolar cable connection.
Optyma-S solenoid valves connected to node must be PNP equivalent (final 02 in ordering code).
The node can be easily installed also on solenoid valves manifold already mounted on equipment.
Module can manage up to 32 solenoid valves, and, in the same time, a max number of 4 Input modules 5222.08S.
The Modbus/TCP module, regardless the number of Input module connected, reports to have connected 8 Input modules.
Regardless of the number of Input modules connected, the managable solenoid valves are 32.
Node power supply is made by a M12 4P male circular connector.
The separation between node 24 VDC Power supply and outputs 24 VDC allows to switch off the outputs maintaning powered the node and inputs, if present.
Connection to Bus Modbus/TCP is possible via 2 M12 4P type D female circular connectors. These two connectors lead the signal to two different communication ports, so they are not connected in parallel.
The node address is assigned during configuration.

Ordering code

5722.32S.MT

Scheme / Overall dimensions and I/O layout :

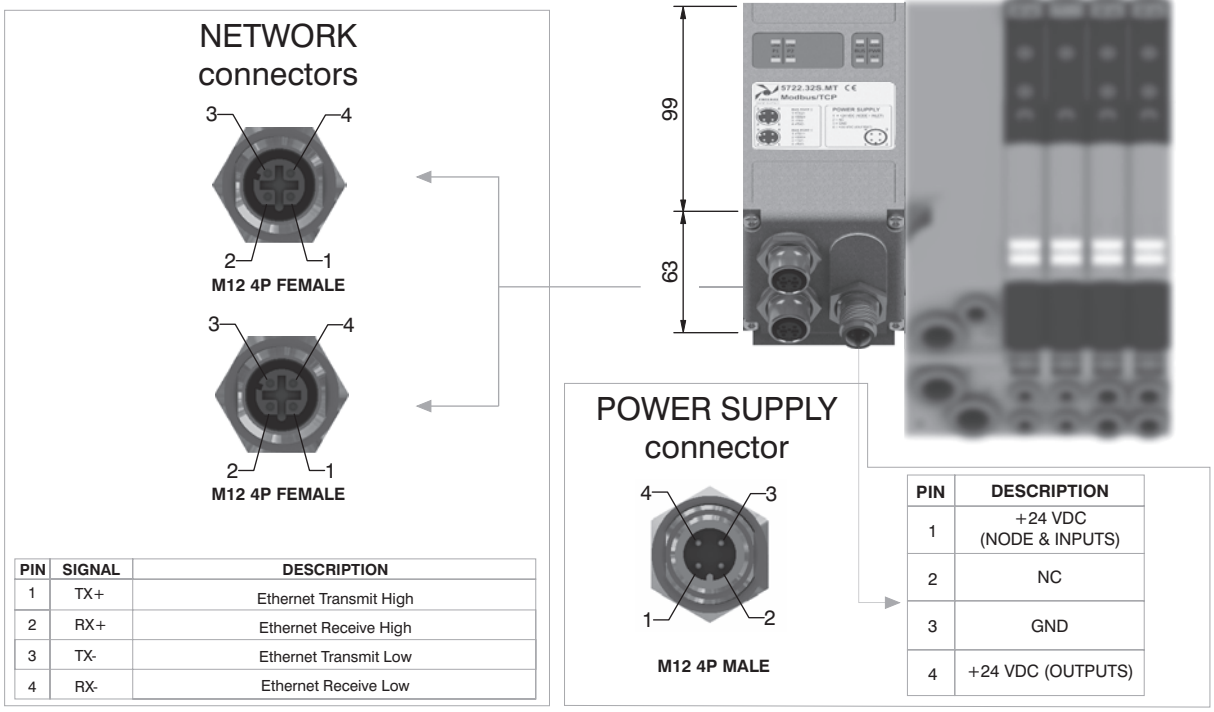

PIN	SIGNAL	DESCRIPTION
1	TX+	Ethernet Transmit High
2	RX+	Ethernet Receive High
3	TX-	Ethernet Transmit Low
4	RX-	Ethernet Receive Low

PIN	DESCRIPTION
1	+24 VDC (NODE & INPUTS)
2	NC
3	GND
4	+24 VDC (OUTPUTS)

Technical characteristics

	Model	5722.32S.MT
	Specifications	MODBUS Application Protocol Specification V1.1a, June 4, 2004
	Case	Reinforced technopolymer
Power supply	Power supply connection	M12 4P male connector (IEC 60947-5-2)
	Power supply voltage	+24 VDC +/- 10%
	Node consumption (without inputs)	400 mA
	Power supply diagnosis	Green LED PWR / Green LED OUT
Outputs	PNP equivalent outputs	+24 VDC +/- 10%
	Maximum current for each output	100 mA
	Maximum output number	32
	Max output simultaneously actuated	32
Network	Network connectors	2 M12 4P female connectors Type D (IEC 61076-2-101)
	Baud rate	100 Mbit/s
	Addresses, possible numbers	248
	Max nodes in net	248
	Maximum distance between 2 nodes	100 m
	Bus diagnosis	1 green and 1 red LED for status + 2 LEDs for link & activity
	Configuration file	Modbus/TCP nodes don't require configuration file
	IP protection grade	IP65 when assembled
	Temperature range	From 0° to +50° C

General:

Modules have 8 connectors M8 3P female.

The Inputs are PNP equivalent 24 VDC ±10%.
To each connector it is possible to plug both 2 wires Inputs (switches, magnetic switches pressure switches, etc) or 3 wires Inputs (proximity, photocells, electronic sensors, etc).
The maximum current available for all 8 Inputs is 300 mA.
Each module includes a 300 mA self-mending fuse. If a short circuit or a overcharge (overall current >300mA) occur the safety device acts cutting the 24 VDC power supply to all M8 connectors on the module and switching off the green LED PWR. Any other Input module connected to the node will remain powered and will function correctly.
Once the cause of the fault disappears the green LED PWR lights up indicating the ON state and the node will re-start to operate.
The maximum number of Input modules supported is 4.

Ordering code

5222.08S

Scheme / Overall dimensions and I/O layout :

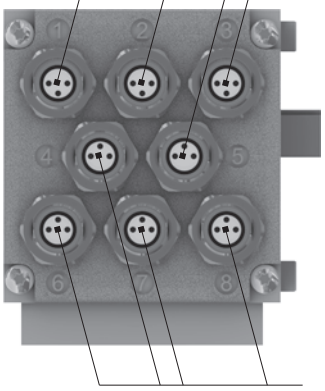

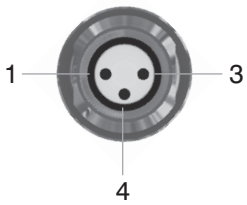

PIN	DESCRIPTION
1	+24 VDC
4	INPUT
3	GND

Module 1

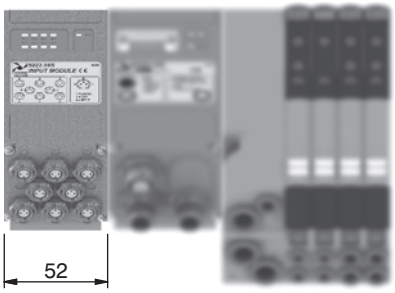

Module 2 Module 1

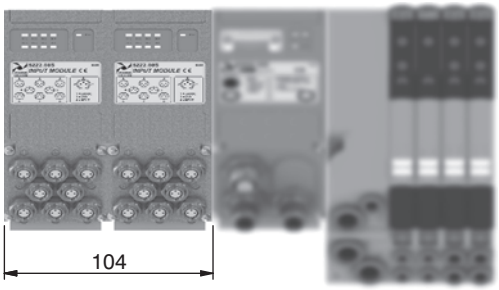

Module 3 Module 2 Module 1

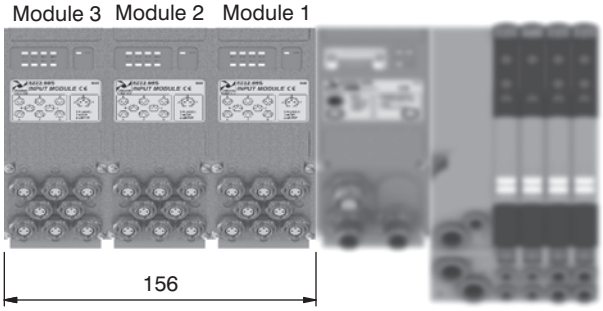

Module 4 Module 3 Module 2 Module 1

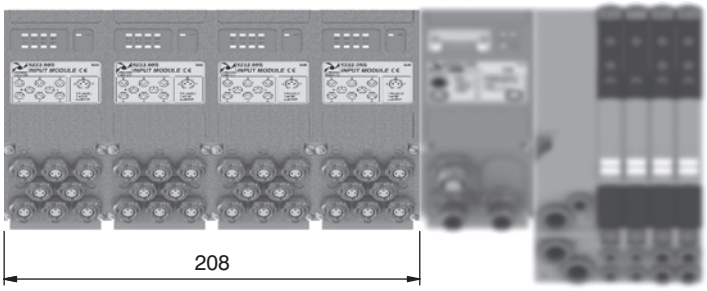

2

M12A 4P female Socket

Ordering code

5312A.F04.00

Power supply straight connector.

Upper view Slave connector

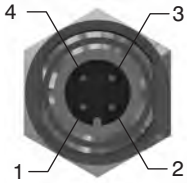

PIN	DESCRIPTION
1	+24 VDC Node
2	
3	0 V
4	+24 VDC Output

M8 3P male Plug

Ordering code

5308A.M03.00

Input straight connector.

Upper view Slave connector

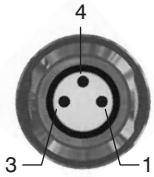

PIN	DESCRIPTION
1	+24 VDC
4	INPUT
3	GND

M12A 5P female Socket

Ordering code

5312A.F05.00

Network straight connector: for Bus CANOpen®, DeviceNet.

Upper view Slave connector

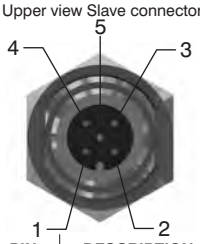

PIN	DESCRIPTION
1	(CAN_SHIELD)
2	(CAN_V+)
3	CAN_GND
4	CAN_H
5	CAN_L

M12A 5P male Plug

Ordering code

5312A.M05.00

Network straight connector: for BUS CANOpen®, DeviceNet.

Upper view Slave connector

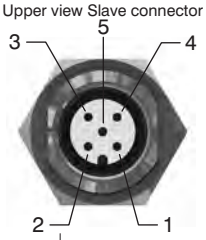

PIN	DESCRIPTION
1	(CAN_SHIELD)
2	(CAN_V+)
3	CAN_GND
4	CAN_H
5	CAN_L

M12B 5P female Plug

Ordering code

5312B.F05.00

Network straight connector: for Bus PROFIBUS DP.

Upper view Slave connector

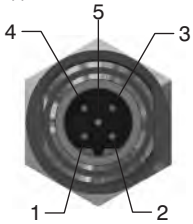

PIN	DESCRIPTION
1	Power Supply
2	A-line
3	DGND
4	B-line
5	SHIELD

M12B 5P male Plug

Ordering code

5312B.M05.00

Network straight connector: for BUS PROFIBUS DP.

Upper view Slave connector

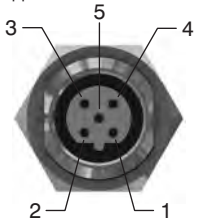

PIN	DESCRIPTION
1	Power Supply
2	A-line
3	DGND
4	B-line
5	SHIELD

M12D 4P male Plug

Ordering code

5312D.M04.00

Network straight connector: for EtherCAT®, PROFINET IO RT/IRT, EtherNet/Ip, Powerlink and Modbus/TCP.

Upper view Slave connector

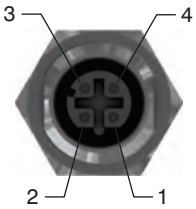

PIN	SIGNAL	DESCRIPTION
1	TX+	Ethernet Transmit High
2	RX+	Ethernet Receive High
3	TX-	Ethernet Transmit Low
4	RX-	Ethernet Receive Low

M12 Plug

Ordering code

5300.T12

M8 Plug

Ordering code

5300.T08

Trademarks: EtherCAT® is registered trademark and patented technology, licensed by Beckhoff Automation GmbH, Germany.

Manifold Layout configuration with serial systems

32 OUT VERSION

C3=CANopen® 32OUT
D3=DeviceNet 32OUT
P3=PROFIBUS 32OUT
A3=EtherCAT® 32OUT (5700 Series)
I3=EtherNet / IP 32OUT
N3=PROFINET IO RT/IRT 32OUT
L3=Powerlink 32OUT
M3=Modbus/TCP 32OUT

INPUT MODULES

A = No module
D1= 8 M8 digital inputs module

RIGHT ENDPLATE

U0 = Closed
U2 = 25 Poles
U3 = 37 Poles

LEFT ENDPLATE

A3 = 37 poles - Self feeding
E3 = 37 poles - External feeding

I/O MODULE

M8
(Requires 25 poles right endplate)

S _ . _ . . . _ . _ . _ _ _ . . . _ _ _ . _ . _ _

MODUL CONFIGURATION

Sub-base type | Valve type

ACCESSORIES CONFIGURATION

SUB-BASE TYPE

3 = 2 Position Monostable sub base ø4 (2 electric signal used)
4 = 2 Position Bistable sub base ø4 (4 electric signals used)
5 = 2 Position Monostable sub base ø6 (2 electric signal used)
6 = 2 Position Bistable sub base ø6 (4 electric signals used)
7 = 2 Position Monostable sub base ø8 (2 electric signal used)
8 = 2 Position Bistable sub base ø8 (4 electric signals used)

VALVES TYPE

A = 5/2 Solenoid - Spring
B = 5/2 Solenoid - Differential
C = 5/2 Solenoid - Solenoid
E = 5/3 CC Solenoid - Solenoid

F = 2x3/2 NC-NC (= 5/3 OC) Solenoid - Solenoid
G = 2x3/2 NO-NO (= 5/3 PC) Solenoid - Solenoid
H = 2x3/2 NC-NO Solenoid - Solenoid
I = 2x3/2 NO-NC Solenoid - Solenoid

T = Free valve space plug

ACCESSORIES

W00 = Intermediate supply & exhaust module

0X0 = Diaphragm plug on pipe 1
00Y = Diaphragm plug on pipeE 3
Z00 = Diaphragm plug on pipe 5

0XY = Diaphragm plug on pipe 1 & 3
ZX0 = Diaphragm plug on pipe 5 & 1
Z0Y = Diaphragm plug on pipe 5 & 3
ZXY = Diaphragm plug on pipe 5,1 & 3

SUB-BASE VARIANTS

EMPTY = No variants (SUB-BASE STANDARD)

6 = Diaphragm Plug on pipe 1 and 3
7 = Diaphragm Plug on pipe 1
8 = Diaphragm Plug on pipe 3 and 5

NOTE:
While configuring the manifold always be careful that the maximum number of electrical signals available is 32
The use of monostable valve mounted on a bistable base (2 electrical signals occupied for each position) causes the loss of one electric signal.
In this case the monostable valve can be replaced by a bistable valve without reconfiguring the PLC.
The diaphragms plugs are used to intercept the conduits 1,3 & 5 of the base.
Should one or more conduits be cut more than one time it is necessary to add the relevant intermediate Supply/Exhaust module.

OPTYMA 32 -F

General characteristics

Pneumax is introducing the latest evolution of the 2400 series, new base mounted line including electrical connection into the manifold.
Many technical features make the new product interesting:
- Flow rate of 1000 Nl/min
- Low consumption coils placed all in one side of the valve
- Quick mounting of the valve to the base using just one screw
- Quick connection of the bases thanks to 180 degree rotating pins
- Possibility to use different pressures along the manifold (including vacuum)
- IP65 environmental protection
- Electrical connection directly integrated into the base, 32 electrical signals available (can be used to build up a manifold of 32 monostable valves, 16 bistable valves or any combination within that limit).

The electrical connection is made via 37 pin SUB-D connector.
Possibility to integrate with Field Bus modules (all the most common protocols will be available).
Possibility to connect input modules (even on the base that does not have the Field Bus module.
Large use of technopolymer material reduces the overall weight of the manifold.

"Shifting time of pneumatic directional control valves or moving parts, logic devices were measured in accordance to ISO 12238:2001, Pneumatic fluid power-Directional control valves-Measurement of shifting time".

Main characteristics

Integrated and optimized electrical connection system
IP65 protection degree
Only one 19mm size
Electrical line connections on one side
Monostable and bistable solenoid valves with the same size dimensions
Easy and fast manifold assembly

Construction characteristics

Body	Technopolymer
Operators	Technopolymer
Spools	Nikel plated steel / Technopolymer
Spacers	Technopolymer
Seals	NBR
Piston seals	NBR
Springs	AISI 302 stainless steel
Pistons	Technopolymer

Functions

5/2 MONOST. SOL. SPRING
5/2 MONOST. SOL. DIFFERENTIAL
5/2 BISTABLE SOL. SOL.
5/3 CC SOL. SOL.
2x3/2 NC-NC (= 5/3 OC) SOL. SOL.
2x3/2 NO-NO (= 5/3 PC) SOL. SOL.
2x3/2 NC-NO SOL. SOL.

Technical characteristics

Voltage	24 VDC ±10% PNP (NPN and AC on request)
Pilot consuption	1,3 Watt
Valve working pressure [1]	from vacuum to 10 bar max.
Pilot working pressure [12-14]	From 3 to 7 bar max.
Operating temperature	-5°C+50°C
Protection degree	IP65
Life (standard operating conditions)	50.000.000
Fluid	Filtered and lubricated air or not (if lubricated air, the lubrication must be continuous)

Solenoid - Spring

Ordering code

2531.52.00.39.Ⓥ

Ⓥ	VOLTAGE
	02 = 24 VDC PNP
	12 = 24 VDC NPN
	05 = 24 VAC

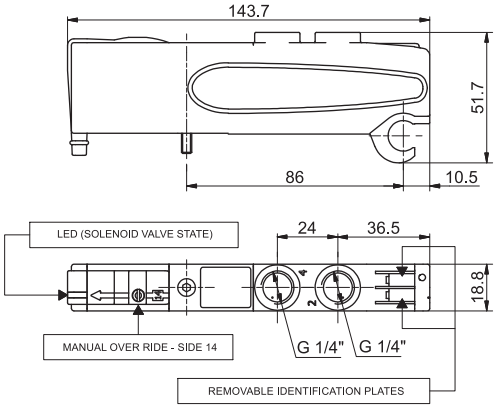

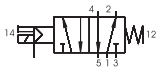

SHORT FUNCTION CODE "A"
"Shifting time of pneumatic directional control valves or moving parts, logic devices were measured in accordance to ISO 12238:2001, Pneumatic fluid power - Directional control valves - Measurement of shifting time."

Operational characteristic

Fluid	Flow rate at 6 bar with Δp=1 (Nl/min)	Responce time according to ISO 12238, activation time (ms)	Responce time according to ISO 12238, deactivation time (ms)	Working pressure (bar)	Pressure range (bar) pilots 12-14	Temperature °C	Weight (gr.)
Filtered air, with or without lubrication	1000	14	40	From vacuum to 10	3 - 7 bar	-5° / +50°	123

Solenoid - Differential

Ordering code

2531.52.00.36.Ⓥ

Ⓥ	VOLTAGE
	02 = 24 VDC PNP
	12 = 24 VDC NPN
	05 = 24 VAC

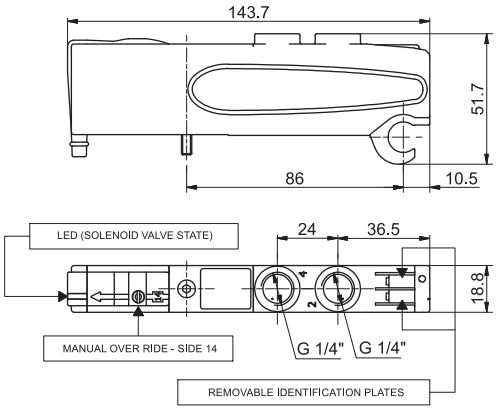

SHORT FUNCTION CODE "B"
"Shifting time of pneumatic directional control valves or moving parts, logic devices were measured in accordance to ISO 12238:2001, Pneumatic fluid power - Directional control valves - Measurement of shifting time."

Operational characteristic

Fluid	Flow rate at 6 bar with Δp=1 (Nl/min)	Responce time according to ISO 12238, activation time (ms)	Responce time according to ISO 12238, deactivation time (ms)	Working pressure (bar)	Pressure range (bar) pilots 12-14	Temperature °C	Weight (gr.)
Filtered air, with or without lubrication	1000	20	29	From vacuum to 10	3 - 7 bar	-5° / +50°	120

Solenoid - Solenoid

Ordering code

2531.52.00.35.Ⓥ

Ⓥ	VOLTAGE
	02 = 24 VDC PNP
	12 = 24 VDC NPN
	05 = 24 VAC

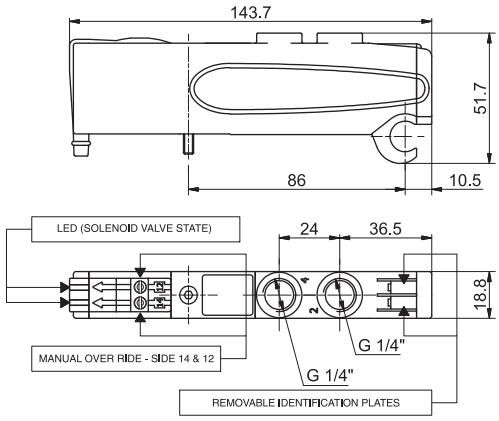

SHORT FUNCTION CODE "C"
"Shifting time of pneumatic directional control valves or moving parts, logic devices were measured in accordance to ISO 12238:2001, Pneumatic fluid power - Directional control valves - Measurement of shifting time."

Operational characteristic

Fluid	Flow rate at 6 bar with Δp=1 (Nl/min)	Responce time according to ISO 12238, activation time (ms)	Responce time according to ISO 12238, deactivation time (ms)	Working pressure (bar)	Pressure range (bar) pilots 12-14	Temperature °C	Weight (gr.)
Filtered air, with or without lubrication	1000	10	14	From vacuum to 10	3 - 7 bar	-5° / +50°	128

Solenoid - Solenoid - (5/3 Closed centres)

Ordering code

2531.53.31.35.Ⓥ

Ⓥ	VOLTAGE
	02 = 24 VDC PNP
	12 = 24 VDC NPN
	05 = 24 VAC

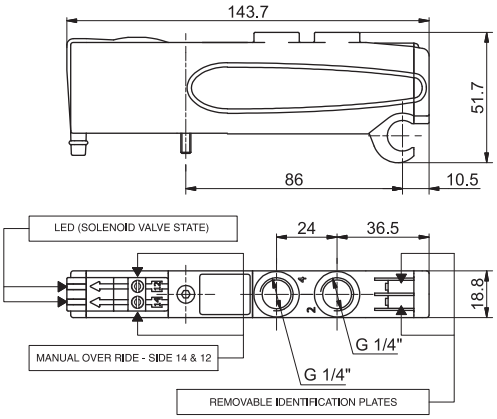

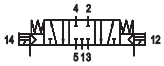

SHORT FUNCTION CODE "E"
"Shifting time of pneumatic directional control valves or moving parts, logic devices were measured in accordance to ISO 12238:2001, Pneumatic fluid power - Directional control valves - Measurement of shifting time."

Operational characteristic

Fluid	Flow rate at 6 bar with Δp=1 (Nl/min)	Responce time according to ISO 12238, activation time (ms)	Responce time according to ISO 12238, deactivation time (ms)	Working pressure (bar)	Pressure range (bar) pilots 12-14	Temperature °C	Weight (gr.)
Filtered air, with or without lubrication	600	15	20	From vacuum to 10	3 - 7 bar	-5° / +50°	126

Solenoid - Solenoid 2x3/2

Ordering code

2531.62.Ⓕ.35.Ⓥ

Ⓕ	FUNCTION
	44 = NC - NC (5/3 Open centres)
	55 = NO - NO (5/3 Pressured centres)
	45 = NC - NO (Normally Closed - Normally Open)
	54 = NO - NC (Normally Open - Normally Closed)
Ⓥ	VOLTAGE
	02 = 24 VDC PNP
	12 = 24 VDC NPN
	05 = 24 VAC

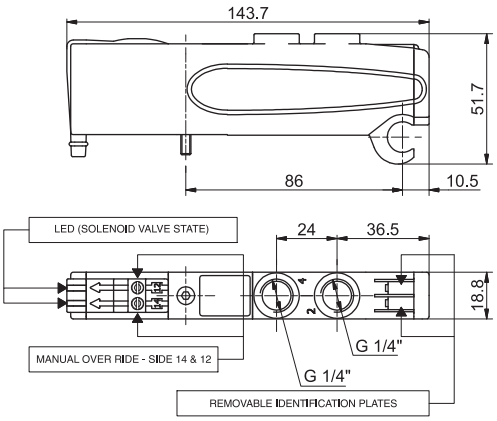

SHORT FUNCTION CODE :
NC-NC (5/3 Open centres) = "F"
NO-NO (5/3 Pressured centres) = "G"
NC-NO = "H"
NO-NC = "I"

"Shifting time of pneumatic directional control valves or moving parts, logic devices were measured in accordance to ISO 12238:2001, Pneumatic fluid power - Directional control valves - Measurement of shifting time."

Operational characteristic

"Example: If inlet pressure is set at 5bar then pilot pressure must be at least Pp=2,5+(0.2*5)= 3,5bar"

Fluid	Flow rate at 6 bar with Δp=1 (Nl/min)	Responce time according to ISO 12238, activation time (ms)	Responce time according to ISO 12238, deactivation time (ms)	Working pressure (bar)	Pressure range (bar) pilots 12-14	Temperature °C	Weight (gr.)
Filtered air, with or without lubrication	700	15	25	From vacuum to 10	≥2,5+(0,2xP.alim.)	-5° / +50°	115,5

Right Endplates

Ordering code	
2530.03.Ⓒ	
Ⓒ	CONNECTOR TYPE
	00 = Exhaust electrical connection closed
	25P=Connector 25 poles

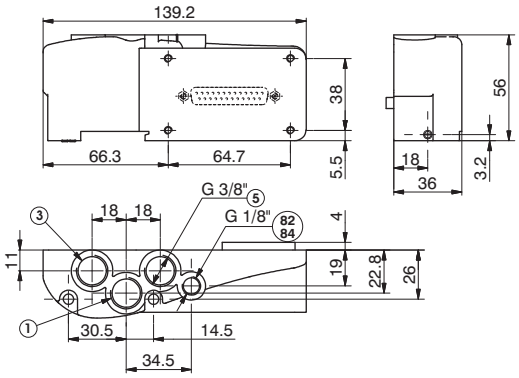

Weight gr. 181,.5

CONDUIT 82/84= DO NOT PRESSURIZE, SOLENOID PILOTS EXHAUST

Operational characteristic		
Fluid	Pressure range (bar)	Temperature °C
Filtered air, with or without lubrication	From vacuum to 10	-5 to +50

Left Endplates - External feeding base

Ordering code	
2530.02.Ⓒ	
Ⓒ	CONNECTOR TYPE
	37P=Connector 37 poles PNP
	25P=Connector 25 poles PNP
	37N=Connector 37 poles NPN
	25N = Connector 25 poles NPN
	37A = Connector 37 poles AC
	25A = Connector 25 poles AC
	C16 = Terminal 16 signals PNP

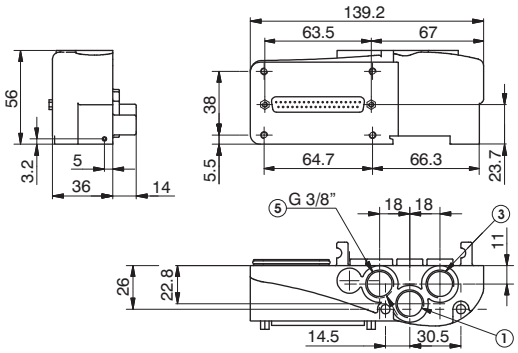

Weight gr. 206

Operational characteristic			
Fluid	Pressure range (bar)	Pilot working pressure (bar)	Temperature °C
Filtered air, with or without lubrication	From vacuum to 10	3 - 7	-5 to +50

Left Endplates - Self-feeding base

Ordering code	
2530.12.Ⓒ	
Ⓒ	CONNECTOR TYPE
	37P=Connector 37 poles PNP
	25P=Connector 25 poles PNP
	37N=Connector 37 poles NPN
	25N = Connector 25 poles NPN
	37A = Connector 37 poles AC
	25A = Connector 25 poles AC
	C16 = Terminal 16 signals PNP

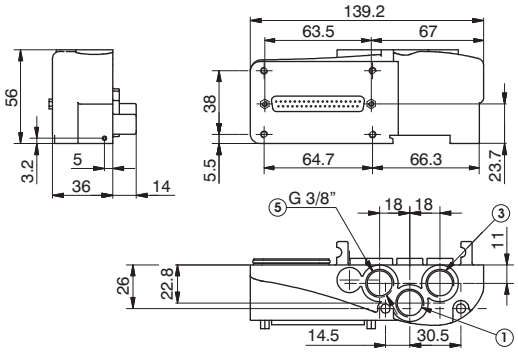

Weight gr. 206

Operational characteristic		
Fluid	Pilot working pressure (bar)	Temperature °C
Filtered air, with or without lubrication	3 - 7	-5 to +50

2

Closing plate

Ordering code
2530.00

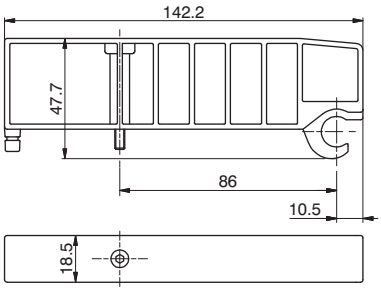

Weight gr. 53,5
SHORT FUNCTION CODE "T"

Operational characteristic		
Fluid	Pressure range (bar)	Temperature °C
Filtered air, with or without lubrication	From vacuum to 10	-5 to +50

Modular base

Ordering code
2530.01Ⓥ

Ⓥ	VERSION
	M=Monostable
	B=Bistable

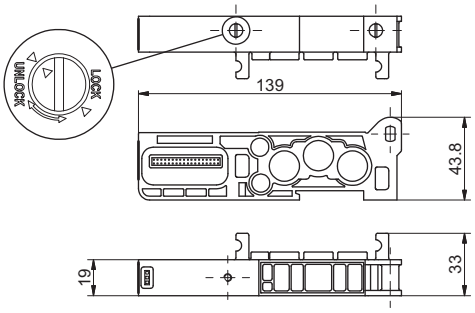

Weight gr. 91,5
SHORT FUNCTION CODE "1" (Monostable)
SHORT FUNCTION CODE "2" (Bistable)

Operational characteristic		
Fluid	Pressure range (bar)	Temperature °C
Filtered air, with or without lubrication	From vacuum to 10	-5 to +50

Intermediate Inlet/Exhaust module

Ordering code
2530.10

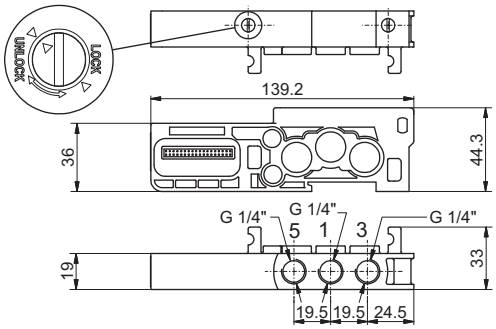

Weight gr. 110
SHORT FUNCTION CODE "W"

Operational characteristic		
Fluid	Pressure range (bar)	Temperature °C
Filtered air, with or without lubrication	From vacuum to 10	-5 to +50

General :

Each Optyma-F manifold lets to manage 32 command signals for the valves.
Optyma-F serial nodes (CANopen®, DeviceNet, PROFIBUS DP, EtherCAT®, PROFINET IO RT/IRT, EtherNet/IP and Powerlink) have a single pin for the power supply of the solenoid valves. So if you want to interrupt the power supply of one valve it is necessary to interrupt all the valves. The additional power supply module lets to interrupt at the same time the first 2 available command signals for the valves after the module itself. The additional power supply module is particularly useful also when you use control signals that block the valves. This application is effective both with serial management and multi-pole connection of the manifolds.
This module is inserted directly into the Optyma-F solenoid valves manifold.

Ordering code

2530.10.2A

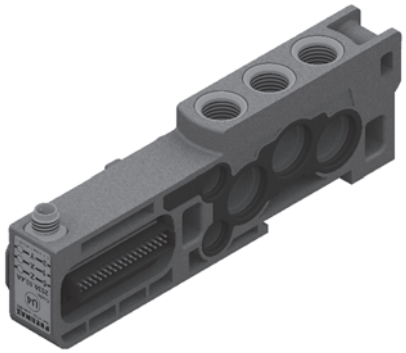

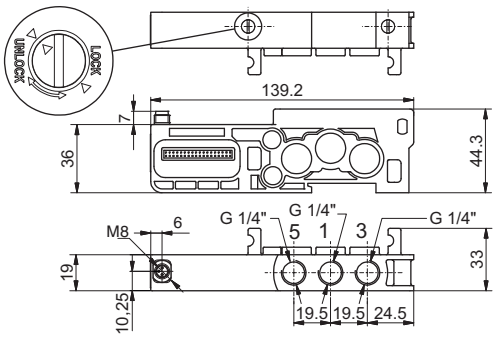

In particular this module is fitted with a M8 3 pins connector:
+24V, not connected, GND.

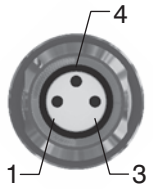

PIN	DESCRIPTION
1	+24 VDC
4	NOT CONNECTED
3	GND

WORKING PRINCIPLE / SIMPLIFIED FUNCTIONAL DIAGRAM

This module uses an external power supply (+24VDC) to manage the solenoid valves.

The output signal from serial node / multi-pole connection is used as command signal: when it is high the +24VDC will be present at the module output.

If you want to cut off the power supply to a group of 2 valves it is sufficient to take away the +24VDC provided to the module by the M8 connector.

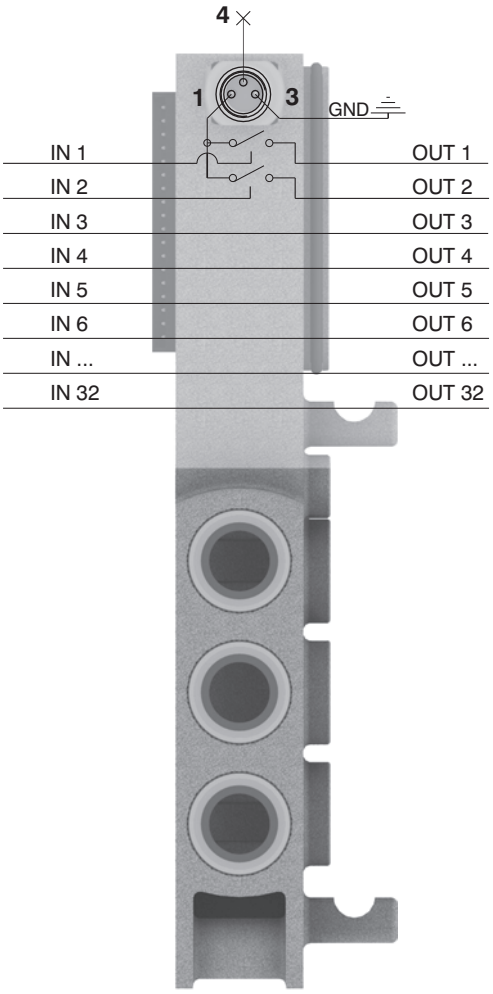

Please note: It is possible to use more modules to interrupt all the command signals, simply by inserting them before the signals to interrupt and after the signals already interrupted.

Usage examples:

EXAMPLE 1:
Manifold of 12 monostable valves on which you want to interrupt signals 7-8

Assembly:
- 6 monostable valves (not interruptible because before the module),
- 1 additional power supply module,
- 6 monostable valves. Please note: the first 2 monostable of these are interruptible by the module, while the following 4 will work correctly managed directly by the corresponding command signals.

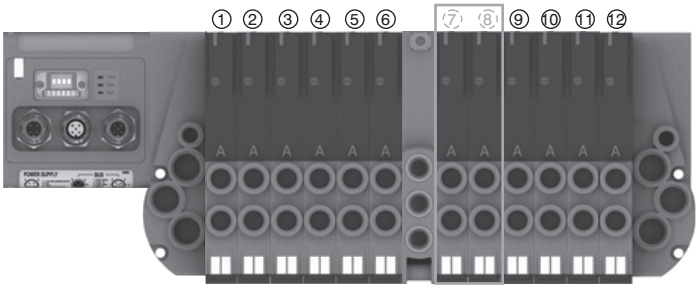

EXAMPLE 2:
Manifold of 12 monostable valves on which you want to interrupt signal 9

Assembly:
- 8 monostable valves (not interruptible because before the module),
- 1 additional power supply module,
- 1 monostable valve (interruptible),
- 1 closing plate mounted on a monostable base,
- 3 monostable valves (work correctly managed directly by the corresponding command signals).

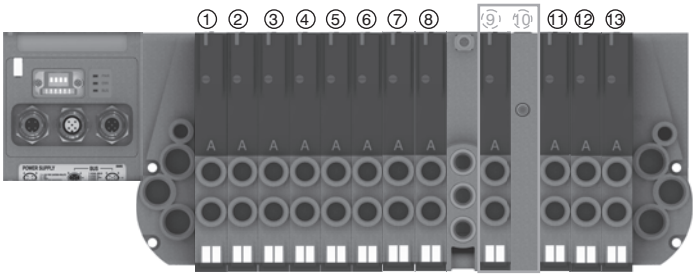

Please note: Each additional power supply module interrupts always 2 electrical signals.
If you need to interrupt less than 2 signals you can:
- assemble the valves to interrupt in the last positions of the manifold, so you don't need to worry about the interrupted exceeding signals;
- use a bistable base and mount a monostable valve (for each signal less than the 2 standard);
- use a monostable base and mount a closing plate (for each signal less than the 2 standard).

EXAMPLE 3:
Manifold of 7 monostable e 3 bistable valves on which you want to interrupt signals 2-3 and 8-9.

Assembly:
- 1 monostable valve (not interruptible because before the module),
- 1 additional power supply module,
- 6 monostable valves.
Please note: the first 2 monostable of these are interruptible by the module, while the following 4 will work correctly managed directly by the corresponding command signals.
- 1 additional power supply module,
- 3 bistable valves.
Please note: the first bistable of these valves is interruptible by the module, while the following 2 will work correctly managed directly by the corresponding command signals.

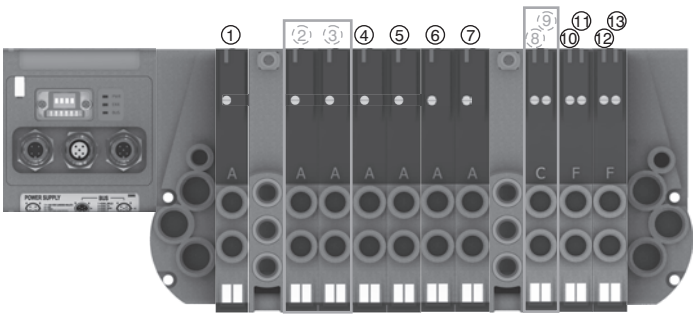

General :

Each Optyma-F manifold lets to manage 32 command signals for the valves.
Optyma-F serial nodes (CANopen®, DeviceNet, PROFIBUS DP, EtherCAT®, PROFINET IO RT/IRT, EtherNet/IP and Powerlink) have a single pin for the power supply of the solenoid valves. So if you want to interrupt the power supply of one valve it is necessary to interrupt all the valves.
The additional power supply module lets to interrupt at the same time the first 4 available command signals for the valves after the module itself. The additional power supply module is particularly useful also when you use control signals that block the valves. This application is effective both with serial management and multi-pole connection of the manifolds.
This module is inserted directly into the Optyma-F solenoid valves manifold.

Ordering code

2530.10.4A

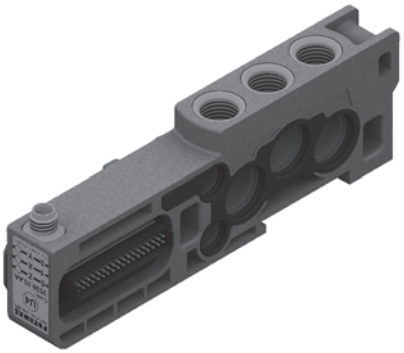

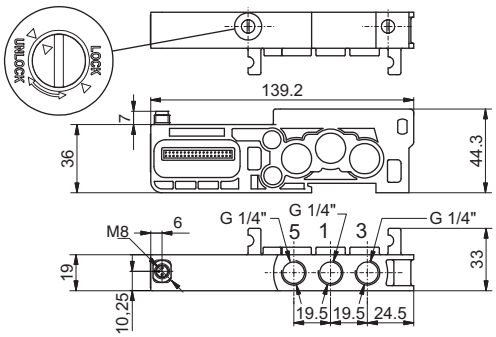

In particular this module is fitted with a M8 3 pins connector:
+24V, not connected, GND.

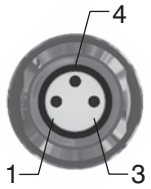

PIN	DESCRIPTION
1	+24 VDC
4	NOT CONNECTED
3	GND

WORKING PRINCIPLE / SIMPLIFIED FUNCTIONAL DIAGRAM

This module uses an external power supply (+24VDC) to manage the solenoid valves.

The output signal from serial node / multi-pole connection is used as command signal: when it is high the +24VDC will be present at the module output.

If you want to cut off the power supply to a group of 4 valves it is sufficient to take away the +24VDC provided to the module by the M8 connector.

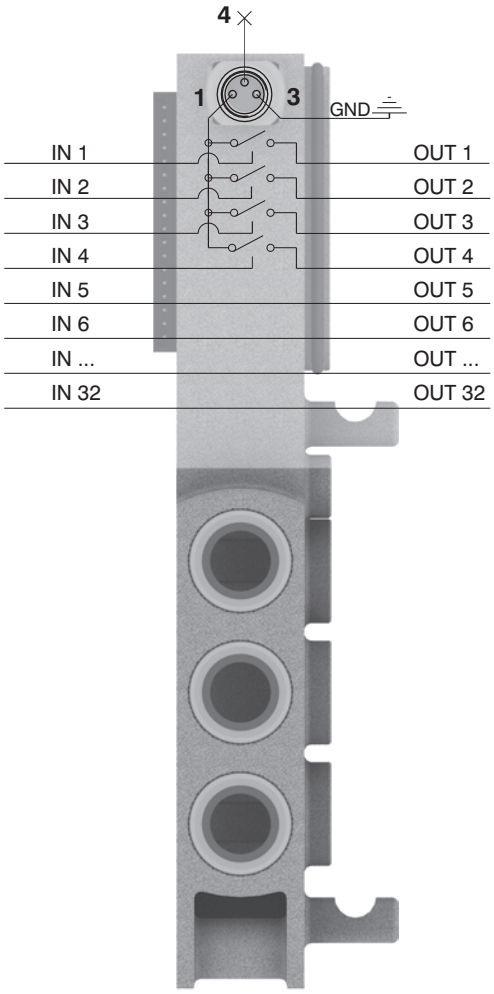

Please note: It is possible to use more modules to interrupt all the command signals, simply by inserting them before the signals to interrupt and after the signals already interrupted.

2

Usage examples:

EXAMPLE 1:
Manifold of 12 monostable valves on which you want to interrupt signals 7-8-9-10

Assembly:
- 6 monostable valves (not interruptible because before the module),
- 1 additional power supply module,
- 6 monostable valves. Please note: the first 4 monostable of these are interruptible by the module, while the following 2 will work correctly managed directly by the corresponding command signals.

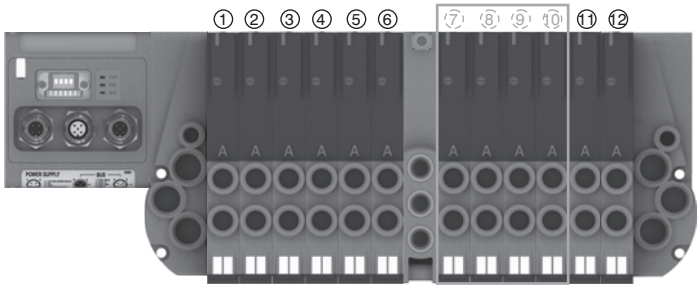

EXAMPLE 2:
Manifold of 12 monostable valves on which you want to interrupt signals 7-8-9

Assembly:
- 6 monostable valves (not interruptible because before the module),
- 1 additional power supply module,
- 3 monostable valves (interruptible),
- 1 closing plate mounted on a monostable base,
- 3 monostable valves (work correctly managed directly by the corresponding command signals).

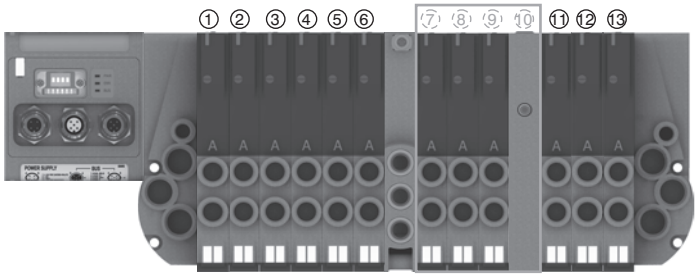

Please note: Each additional power supply module interrupts always 4 electrical signals.
If you need to interrupt less than 4 signals you can:
- assemble the valves to interrupt in the last positions of the manifold, so you don't need to worry about the interrupted exceeding signals;
- use a bistable base and mount a monostable valve (for each signal less than the 4 standard);
- use a monostable base and mount a closing plate (for each signal less than the 4 standard).

EXAMPLE 3:
Manifold of 7 monostable e 3 bistable valves on which you want to interrupt signals 2-3-4-5 and 8-9-10-11.

Assembly:
- 1 monostable valve (not interruptible because before the module),
- 1 additional power supply module,
- 6 monostable valves.
Please note: the first 4 monostable of these are interruptible by the module, while the following 2 will work correctly managed directly by the corresponding command signals.
- 1 additional power supply module,
- 3 bistable valves.
Please note: the first 2 bistable of these valves are interruptible by the module, while the following will work correctly managed directly by the corresponding command signals.

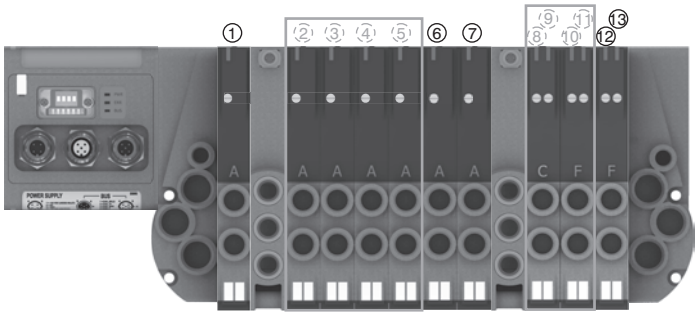

Polyethylene Silencer Series SPL-P

Ordering code	
SPLP.Ⓕ	
Ⓕ	TUBE DIAMETER
	18=1/8"
	14=1/4"
	38=3/8"

Diaphragm plug

Ordering code
2530.17

Weight gr. 6,5

Cable complete with connector, 25 Poles IP65

Ordering code	
2300.25.Ⓛ.Ⓟ	
Ⓛ	CABLE LENGHT
	03 = 3 metres
	05 = 5 metres
	10 = 10 metres
Ⓟ	CONNECTOR TYPE
	10 = In line
	90 = 90° Angle

Cable complete with connector, 37 Poles IP65

Ordering code	
2400.37.Ⓛ.Ⓟ	
Ⓛ	CABLE LENGHT
	03 = 3 metres
	05 = 5 metres
	10 = 10 metres
Ⓟ	CONNECTOR TYPE
	10 = In line
	90 = 90° Angle

Cable complete with connector, 25 Poles IP65

Ordering code	
2400.25.Ⓛ.25	
Ⓛ	CABLE LENGHT
	03 = 3 metres
	05 = 5 metres
	10 = 10 metres

The electrical connection is achieved by a 37 pin connector and can manage up to 32 solenoid pilots.
It is also possible use a 25 sub-D pin connector and, in this case, it is possible to manage a maximum of 22 outputs. It is also available a terminal, able to manage a maximum of 16 outputs.
The management and distribution of the electrical signals between each valve is obtained thanks to an electrical connector which receives the signals from the previous module, uses one, two or none depending on the type, and carries forward to the next module the remaining.
Bistable valves, 5/3 and 2x3/2 valves which have two solenoid pilots built in, use two signals; the first is directed to the pilot side 14 the second to the pilot side 12. Modular bases can be fitted with two type of electrical connector: the monostable version uses only one signal (connected to the pilot side 14) and carries forward the remaining, the bistable version which always uses two signals.
This solution allows the modification of the manifold (replacement of monostable valves without bistable for example) without having to reset the PLC output layout.
On other hand this solution limits the maximum number of valves to 16 when it is used a 37 pin connector or 11 when it is used a 25 pin connector. When using a Endplates with terminal, the maximum number of valves are 8.
Intermediate supply/exhaust module uses an electrical connector directly forwarding signals to the next one without any kind of modification.
This allows the use of intermediate modules in any position of the manifold.
All the electrical signals that have not been used on the manifold can be used placing at the end of the manifold the end plate complete with the 25 sub-D female connector.
The number of available signals depends of the connector used to the type of the left end plate and by the total signals used along the manifold:

37 pin connector	nr of output = 32 – (total of used signals)
25 pin connector	nr of output = 22 – (total of used signals)
Terminal	nr of output = 16 – (total of used signals)

Following we show some examples of possible combination and the relative pin assignment.

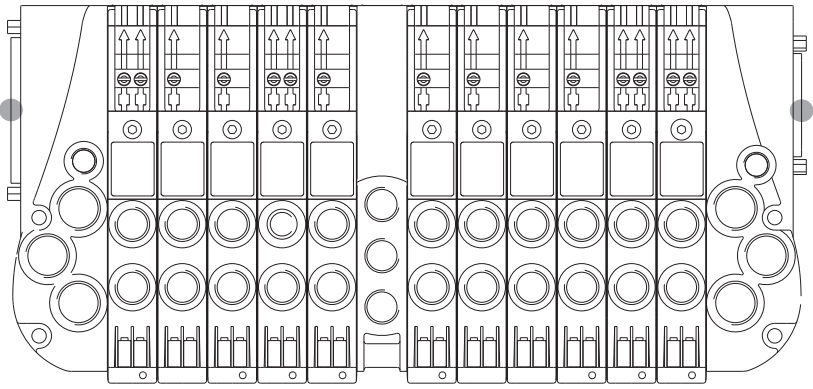

IN-LET ELECTRIC CONNECTIONS

SUB-D 37 POLE
MALE CONNECTOR

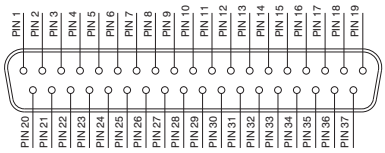

1 - 32 = Solenoid valves signals
33 - 35 = GND
36 - 37 = Through line

TERMINAL 16 SIGNALS

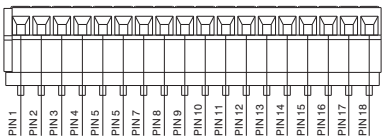

POS. 1-16 = SIGNALS
POS. 17 = GND
POS. 18 = THROUGH LINE

SUB-D 25 POLE
MALE CONNECTOR

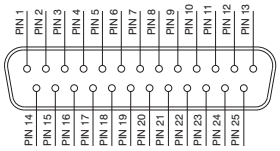

1 - 22 = Solenoid valves signals
23 - 24 = GND
25 = Through line

OUTLET ELECTRIC CONNECTIONS (IF PRESENT)

SUB-D 25 POLE
FEMALE CONNECTOR

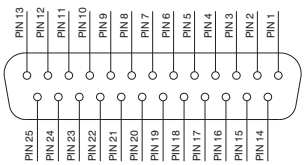

1 - 22 = Solenoid valves signals
23 - 24 = GND
25 = Through line

37 PIN Connector correspondence for valves assembled on mixed bases

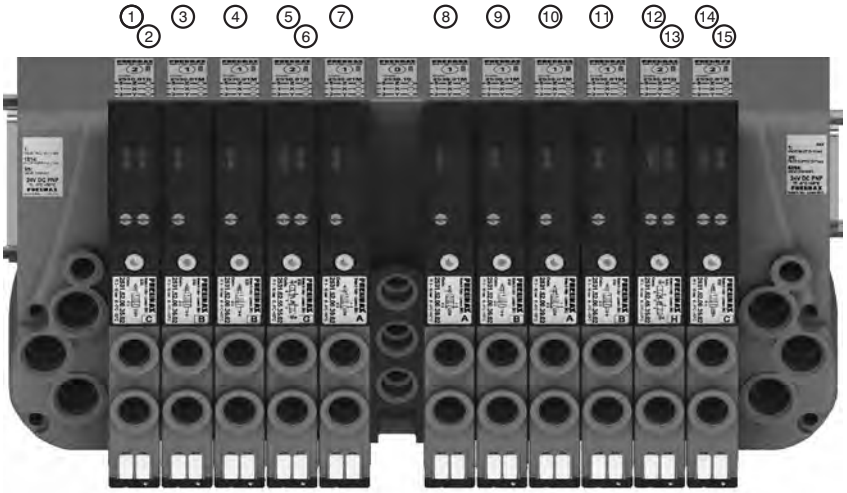

POS.	1	2	3	4	5	6	7	8	9	10	11	12

PIN 1 = PILOT 14 EV POS.1
PIN 2 = PILOT 12 EV POS.1
PIN 3 = PILOT 14 EV POS.2
PIN 4 = PILOT 14 EV POS.3
PIN 5 = PILOT 14 EV POS.4
PIN 6 = PILOT 12 EV POS.4
PIN 7 = PILOT 14 EV POS.5
PIN 8 = PILOT 14 EV POS.7
PIN 9 = PILOT 14 EV POS.8
PIN 10 = PILOT 14 EV POS.9
PIN 11 = PILOT 14 EV POS.10
PIN 12 = PILOT 14 EV POS.11
PIN 13 = PILOT 12 EV POS.11
PIN 14 = PILOT 14 EV POS.12
PIN 15 = PILOT 12 EV POS.12

37 PIN Connector correspondence for manifold mounted on bases for bistable valves

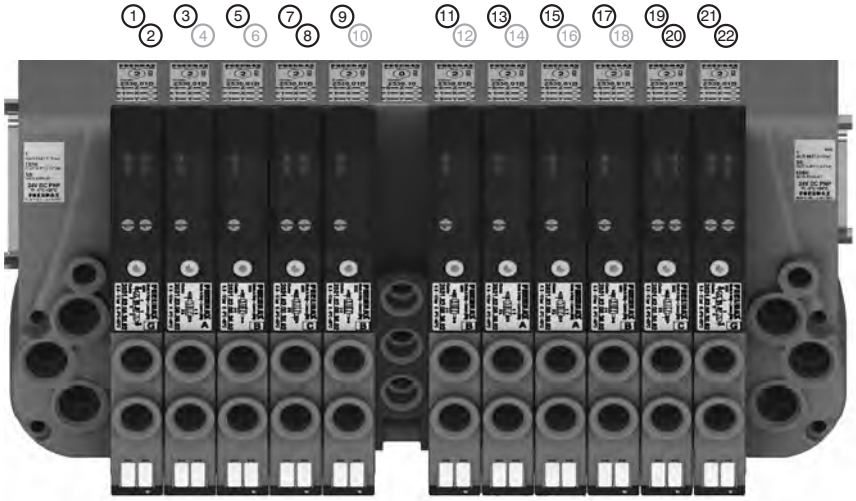

POS.	1	2	3	4	5	6	7	8	9	10	11	12

PIN 1 = PILOT 14 EV POS.1
PIN 2 = PILOT 12 EV POS.1
PIN 3 = PILOT 14 EV POS.2
PIN 4 = NOT CONNECTED
PIN 5 = PILOT 14 EV POS.3
PIN 6 = NOT CONNECTED
PIN 7 = PILOT 14 EV POS.4
PIN 8 = PILOT 12 EV POS.4
PIN 9 = PILOT 14 EV POS.5
PIN 10 = NOT CONNECTED
PIN 11 = PILOT 14 EV POS.7
PIN 12 = NOT CONNECTED
PIN 13 = PILOT 14 EV POS.8
PIN 14 = NOT CONNECTED
PIN 15 = PILOT 14 EV POS.9
PIN 16 = NOT CONNECTED
PIN 17 = PILOT 14 EV POS.10
PIN 18 = NOT CONNECTED
PIN 19 = PILOT 14 EV POS.11
PIN 20 = PILOT 12 EV POS.11
PIN 21 = PILOT 14 EV POS.12
PIN 22 = PILOT 12 EV POS.12

37 PIN Connector correspondence for manifold for 32 position manifold with monostable valves on base

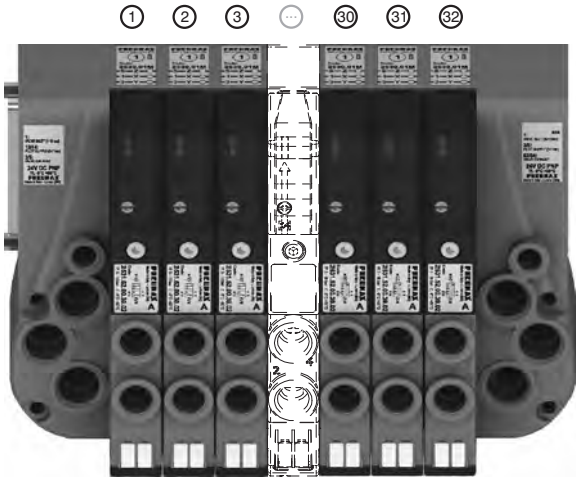

POS.	1	2	3	...	30	31	32

25 PIN Connector correspondence for manifold for 22 position manifold with monostable valves on base

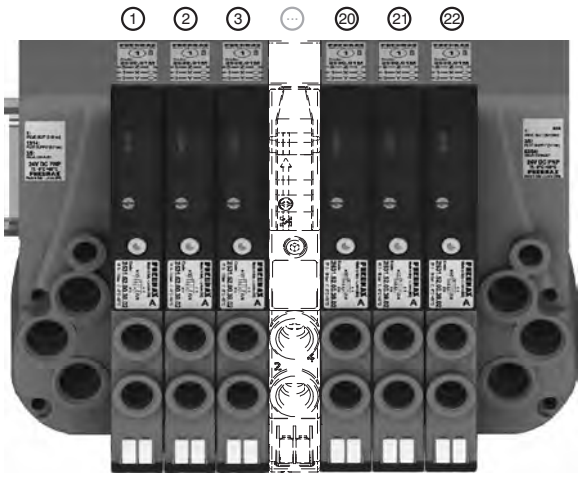

POS.	1	2	3	...	20	21	22

2

General :

Using the 2530.03.25P output terminal it is possible to make any electrical signals not used by valves available on a 25 sub-D female connector at the right end of the manifold.
It is possible to then join a multi-core cable to link to the next manifold, or connect directly to one or two I/O modules.
The I/O modules can accept input or output signals, depending upon what is connected.

Ordering code

2530.08F

Please note: If the manifold is connected by a multi-core connection, each connection can be used as either an input or an output, while if the manifold is connected to a serial node the connections can only be used as an output.

It is possible to connect the manifold to up to two I/O modules.

Each I/O module includes 8 diagnostic LEDs which indicate the presence of an Input / Output signal for each connector.

Please note: For an LED to function, a signal of at least +15VDC must be present on pin 4 of the connector. If this signal is lower, the LED will not light, this does not compromise the normal Input / Output function of the unit.

Overall dimensions and I/O layout :

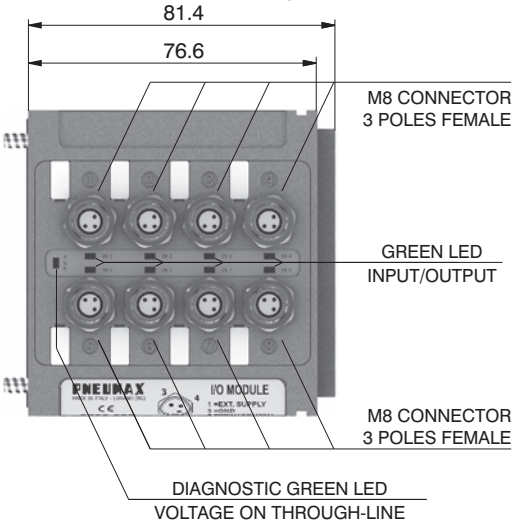

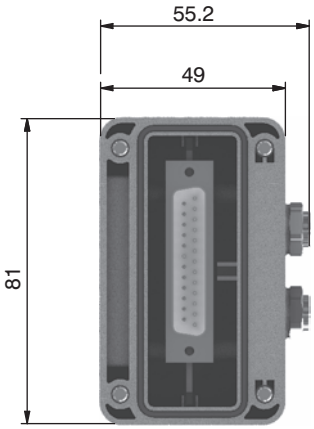

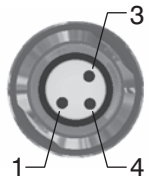

PIN	DESCRIPTION
1	+24 VDC
4	INPUT/OUTPUT
3	GND

Input features:

Each connection can accept either two wire (switches, magnetic switches, pressure switches, etc.) or three wire connections (photocells, electronic end of stroke sensors, etc.) If +24VDC is required on at Pin 1 of each connector, it is possible to provide this via the through-line pin of the multi-pole connector.
I.E :
Pin 25 of the 25 pin multi-pole connector (code 2530.02.25P or 2530.12.25P)
Pin 36-37 of the 37 pin multi-pole connector (code 2530.02.37P or 2530.12.37P)

Output features:

Attention: The output connections are not protected against short-circuit. Please pay attention when wiring (avoid Pin 4 being connected to Pin 3 or Pin 1).

	Model	2530.08F
	Case	Reinforced technopolymer
General characteristics	I/O Connector	M8 connector 3 poles female (IEC 60947-5-2)
	PIN1 voltage (connector used as Input)	By the user
	PIN 4 voltage diagnosis	Green LED
	Node consumption (Outlets excluded)	7mA per each LED with 24 VDC signal
	Outlets voltage	+23,3 VDC (serial) /by the user (multipolar)
	Input voltage	Depend by the using
	Maximum outlet current	100 mA (serial) / 400 mA (multipolar)
	Maximum Input/Output	8 per module
	Multiconnector max. Current	100 mA
	Connections to manifold	Direct connection to 25 poles connector
	Maximum n. of moduls	2
	Protection degree	IP65 when assembled
	Ambient temperature	from -0° to +50° C

CORRESPONDENCE BETWEEN MULTI-POLE SIGNAL AND CONNECTOR

SUB-D TYPE 37 POLE MALE CONNECTOR

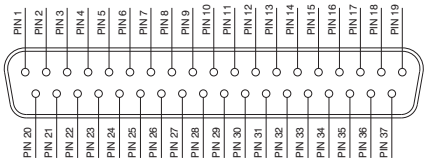

1 - 32 = SIGNALS
33 - 35 = GND
36 - 37 = THROUGH LINE

SUB-D TYPE 25 POLE MALE CONNECTOR

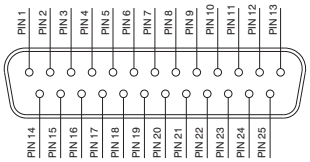

1 - 22 = SIGNALS
23 - 24 = GND
25 = THROUGH LINE

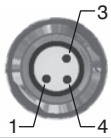

PIN	DESCRIPTION
1	THROUGH LINE
4	SIGNAL
3	GND

Connection modes:

The I/O module changes it is operation depending on the way the manifold is controlled. There are two possible modes:

A) Control via multi-pole connection
B) Control via fieldbus

In order to use the I/O module, the correct right hand endplate with 25 pole female outlet connector must be used.
(Code 2530.03.25P).

A) Control via multi-pole :

M8 connector used as Input:

Attention: Voltage applied to each connector is passed to multi-pole connector pin.

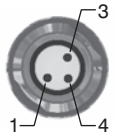

PIN	DESCRIPTION
1	THROUGH LINE
4	SIGNAL
3	GND

M8 connector used as Output:

Output voltage will the same as is applied at the multi-pole connector pin.
The maximum output current depends upon the power unit used, but we recommend no more than 250mA.

Attention: Since every cable has a degree of resistance, there will always be a voltage drop depending on the cable's length, sectional area and the current.

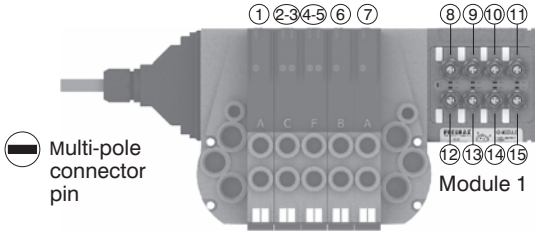

Attention: Only one more I/O module can be added.

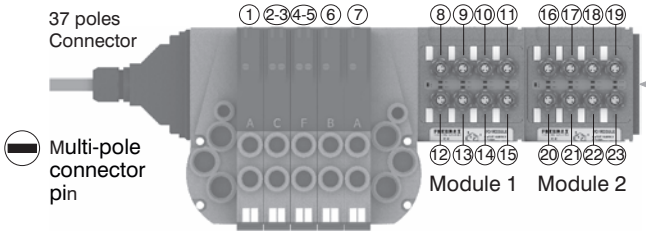

Attention: No more additions are possible

Attention : Optyma 32-F solenoid valve manifolds permit up to 22 electrical signals that are not used by manifolds to be made available: these signals can be managed by another manifold and / or by I/O modules.
The I/O module will manage these unused signals. Connections that are not managing useful signals will remain unconnected.

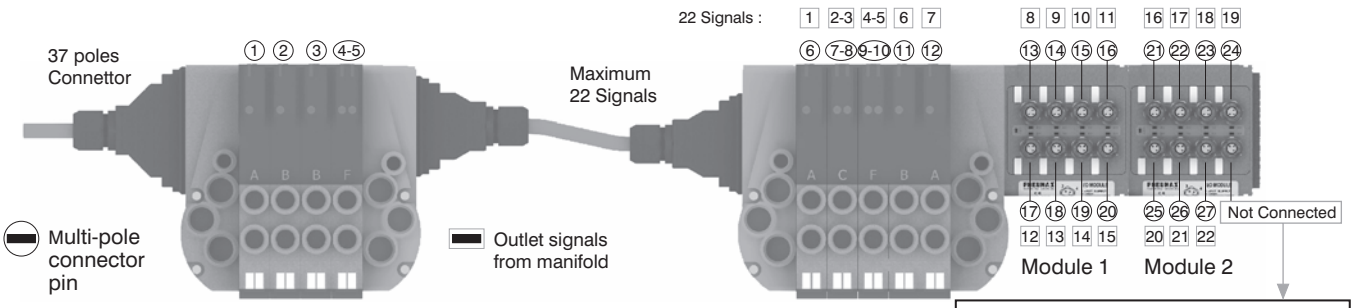

Please note: this example considers a 37 pin multi-pole connector.
The same configuration managed by a 25 pin multi-pole connector will stop at number 22 of multi-pole connector and at number 17 of the manifold. 22 17

Attention:
Signal Not connected
GND Connected
Through line Connected

2

Please note: Optyma 32-F solenoid valve manifolds manage up to 32 signals. If the manifold uses more than 24 signals the I/O module will manage only the remainder. Connections that are not managing useful signals will remain unconnected.

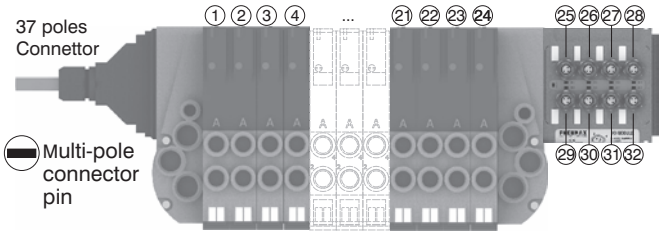

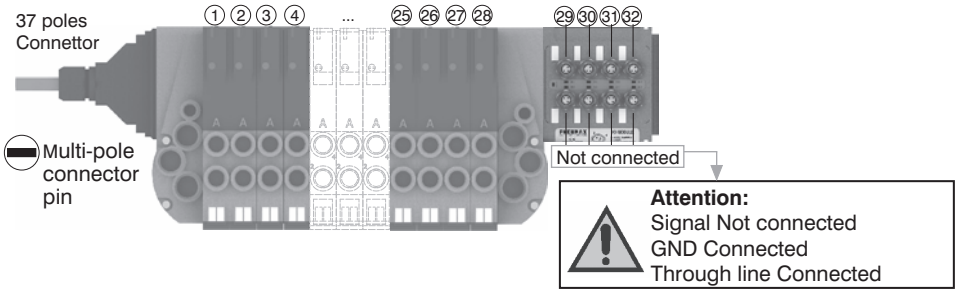

B) Control via fieldbus:

With this kind of control the I/O module can only be used as an output. Pin 1 of each connector is not connected. The output voltage will be 0.7V lower than that applied to Pin 4 of the connector.
The maximum output current for each output is 100mA. Te correspondence between control byte and each single output depends on how many electrical signals are used by the manifold and by the relative position of the I/O module.

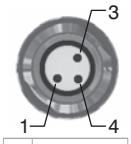

PIN	DESCRIPTION
1	NOT CONNECTED
4	SIGNAL
3	GND

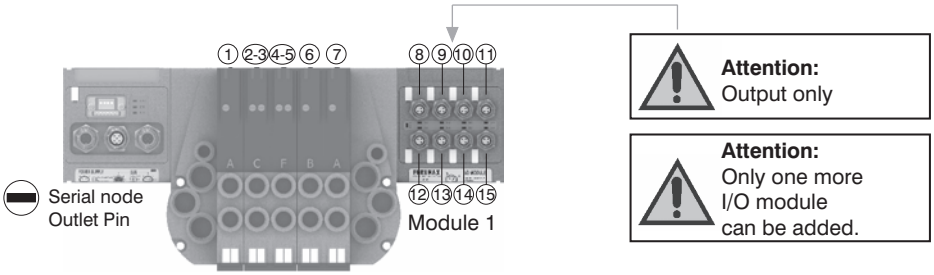

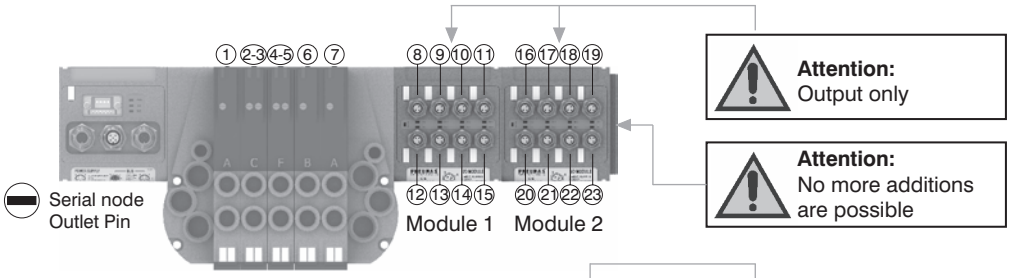

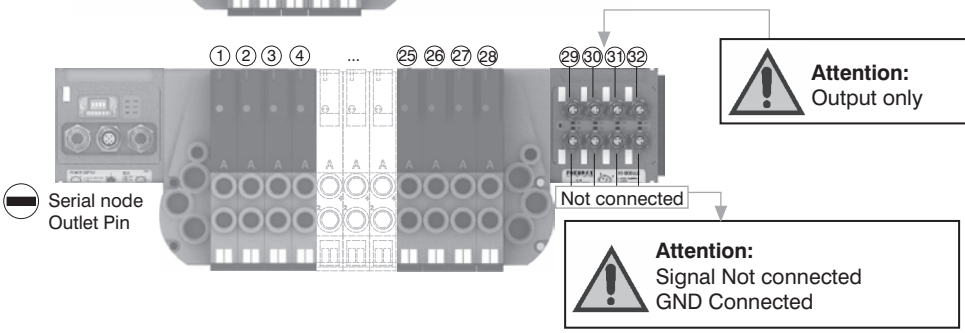

Please note: I/O modules don't allow to connect any additional valves manifold after them.

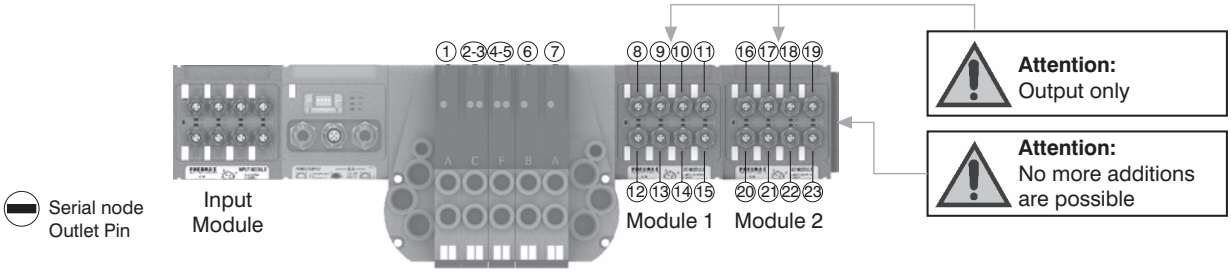

From the top

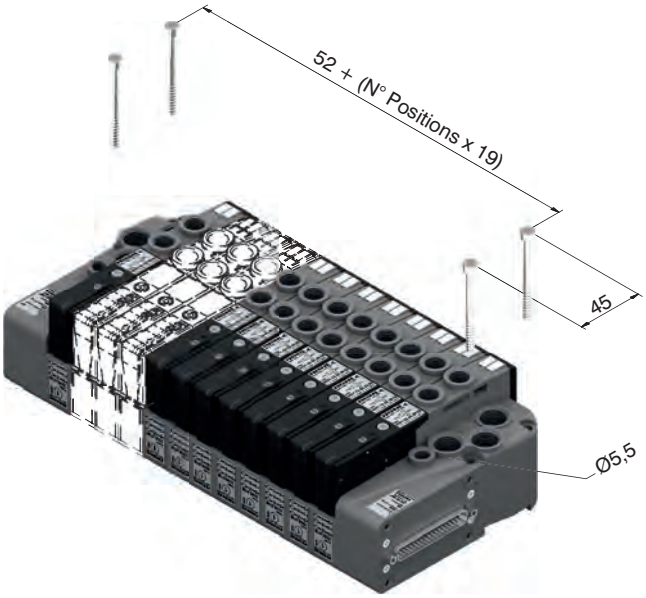

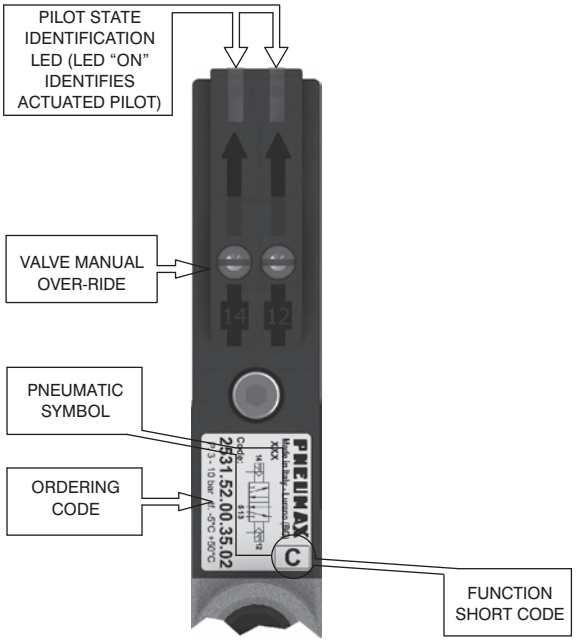

DIN rail fixing

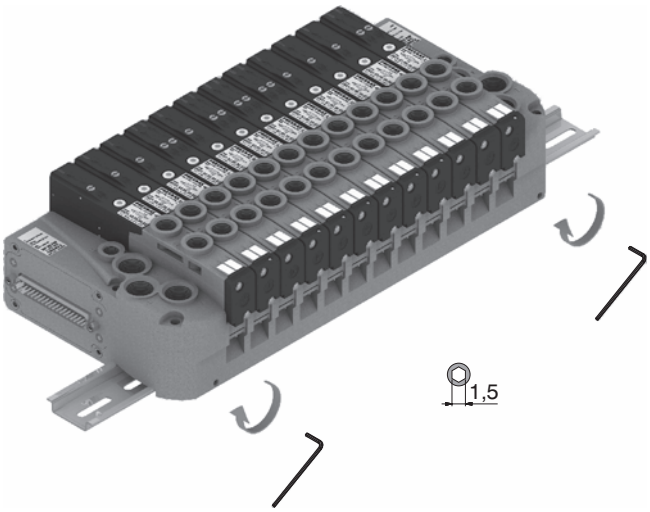

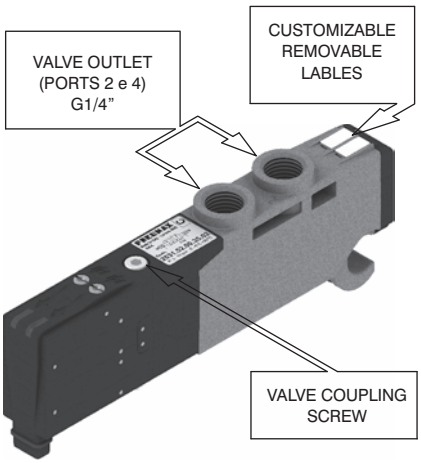

Maximum possible size according to valves seats

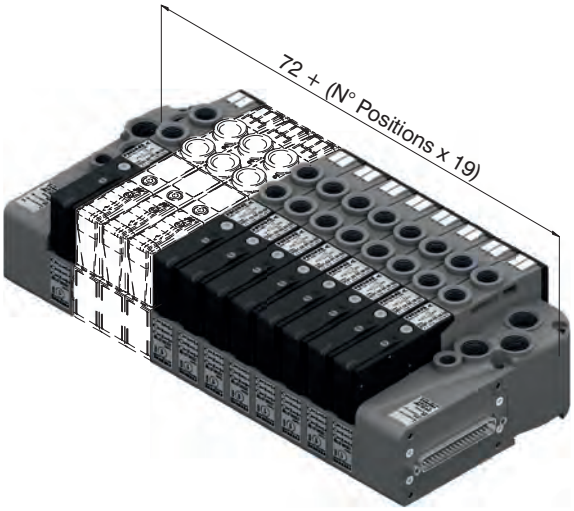

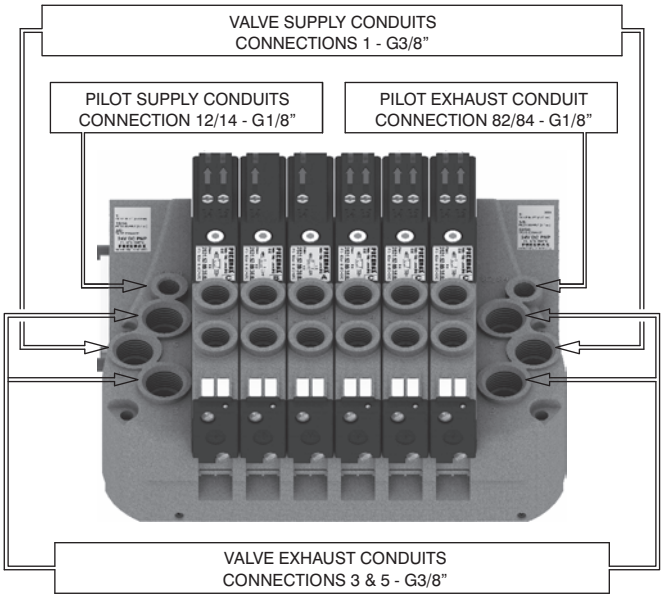

2

Manual override actuation

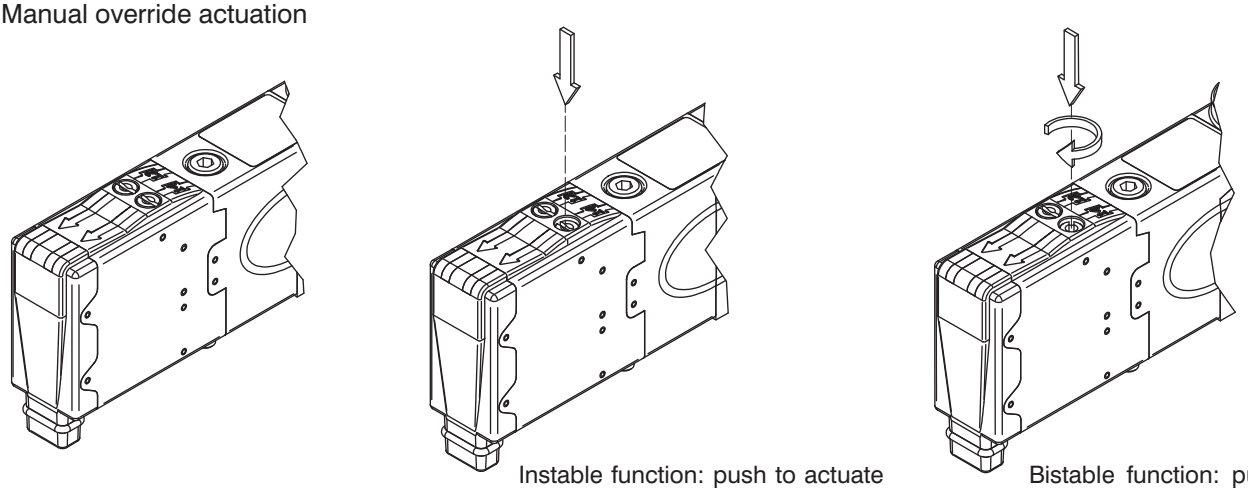

Instable function: push to actuate (when released it moves back to the original position).

Bistable function: push and turn to get the bistable function

NOTE : It is strongly suggested to replace the original position after using

Valve Installation

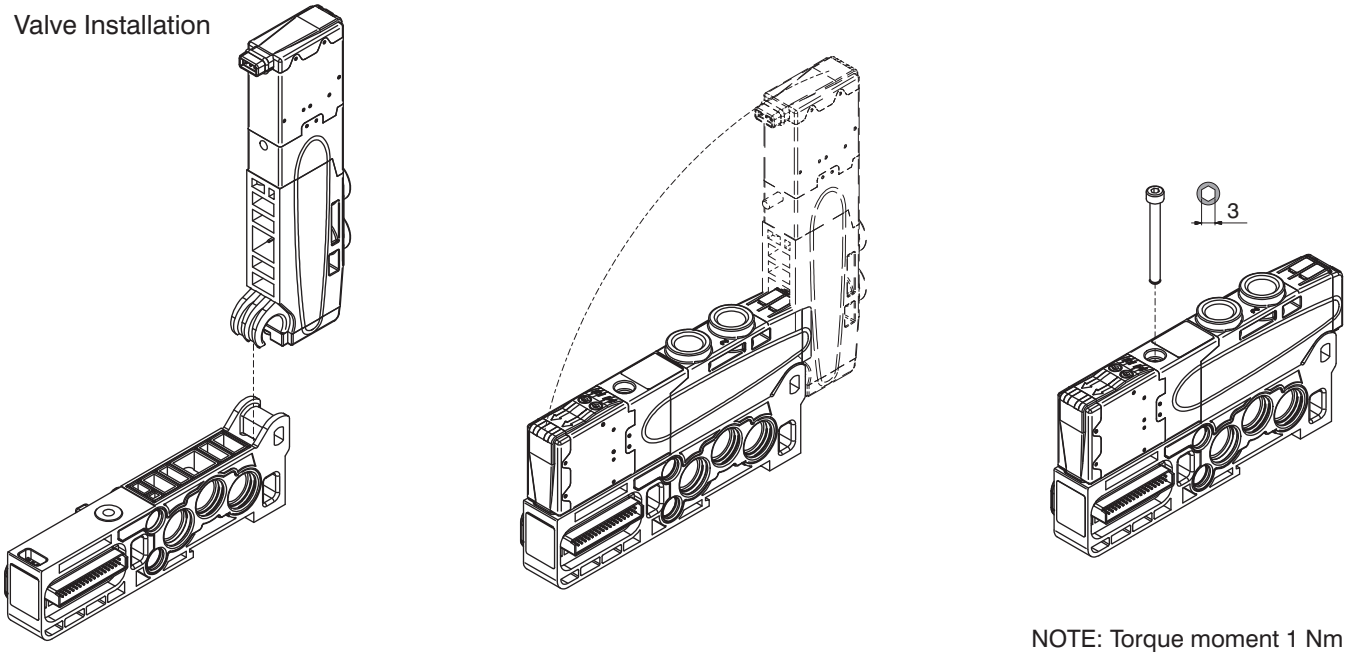

NOTE: Torque moment 1 Nm

Manifold assembly

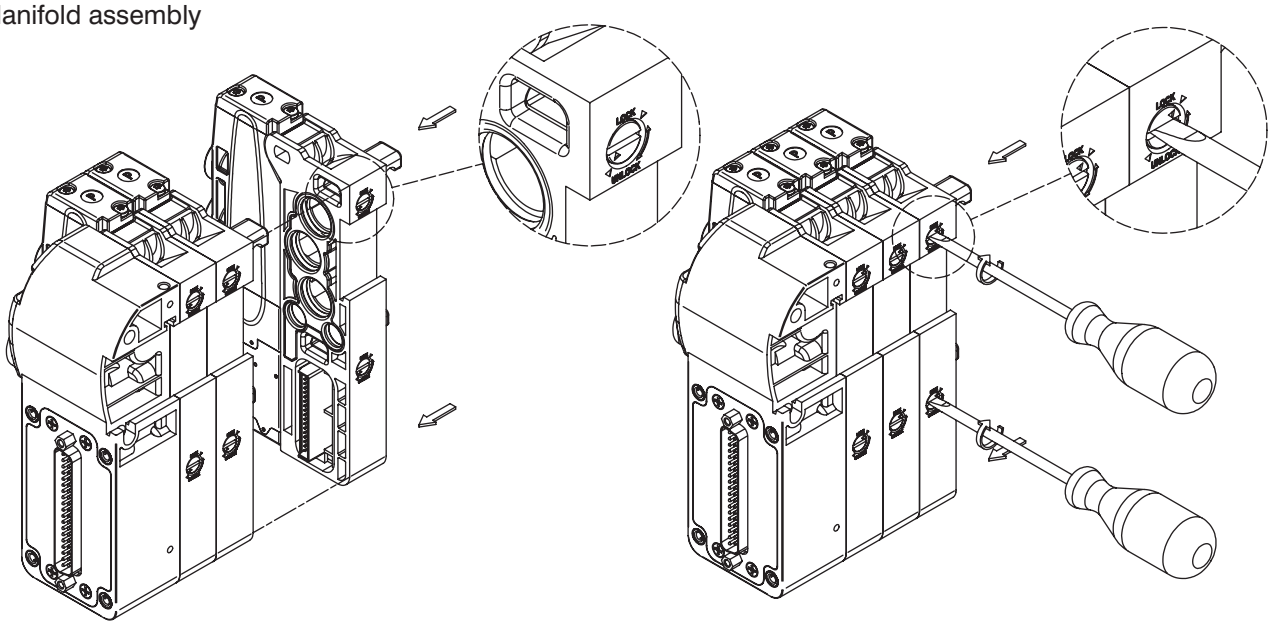

Manifold Layout configuration

MULTIPOINT CONNECTION

MP = PNP 24 V DC
MN = NPN 24 V DC
MA = 24 V AC

LEFT ENDPLATE

A2 = 25 poles - Self feeding
A3 = 37 poles - Self feeding
E2 = 25 poles - External feeding
E3 = 37 poles - External feeding
AM = 16 signals - Self feeding
EM = 16 signals - External feeding

RIGHT ENDPLATE

U0 = Closed
U2 = 25 Poles
U3 = 37 Poles

I/O MODULE

M8
(Requires 25 poles right endplate)

MODUL CONFIGURATION

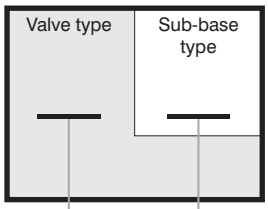

ACCESSORIES CONFIGURATION

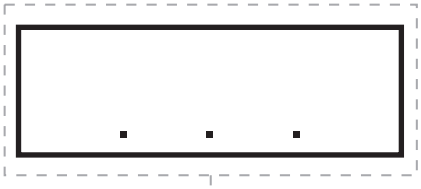

SHORT CODE FUNCTION / CONNECTION :

A1= 5/2 SOL.-SPRING + BASE TYPE 1 (1 electrical signal occupied)
A2= 5/2 SOL.-SPRING + BASE TYPE 2 (2 electrical signals occupied)
B1= 5/2 SOL.-DIFFERENTIAL + BASE TYPE 1 (1 electrical signal occupied)
B2= 5/2 SOL.-DIFFERENTIAL + BASE TYPE 2 (2 electrical signals occupied)
C2= 5/2 SOL.-SOL. + BASE TYPE 2 (2 electrical signals occupied)
E2= 5/3 CC SOL.-SOL. + BASE TYPE 2 (2 electrical signals occupied)
F2= 2x3/2 NC-NC (= 5/3 OC) SOL.-SOL.+BASE TYPE 2 (2 electrical signals occupied)
G2= 2x3/2 NO-NO (= 5/3 PC) SOL.-SOL.+BASE TYPE 2 (2 electrical signals occupied)
H2= 2x3/2 NC-NO SOL.-SOL. + BASE TYPE 2 (2 electrical signals occupied)
I2= 2x3/2 NO-NC SOL.-SOL. + BASE TYPE 2 (2 electrical signals occupied)
T1= FREE VALVE SPACE PLUG + BASE FOR MONOSTABLE VALVE
T2= FREE VALVE SPACE PLUG + BASE FOR BISTABLE VALVE

ACCESSORIES

U2 = Power supply 2 positions module
U4 = Power supply 4 positions module
W = Intermediate supply & exhaust module
X = Diaphragm plug on pipe 1
Y = Diaphragm plug on pipe 3
Z = Diaphragm plug on pipe 5
XY = Diaphragm plug on pipe 1 & 3
ZX = Diaphragm plug on pipe 5 & 1
ZY = Diaphragm plug on pipe 5 & 3
ZXY = Diaphragm plug on pipe 5, 1 & 3

NOTE:
While configuring the manifold always be careful that the maximum number of electrical signals available is:
32 when an input 37 poles endplate is used.
22 when an input 25 poles endplate is used.
The use of monostable valve mounted on a base type 2 (2 electrical signals occupied) causes the loss of one electric signal.
In this case the monostable valve can be replaced by a bistable valve. The diaphragms plugs are used to intercept the conduits 1,3 & 5 of the base. If it is necessary to interrupt more than one conduit in the same time then put in line the letters which identifies the position (for exemple : regarding the 3 & 5 conduits, put the Y & Z letters).
Should one or more conduits be cut more than one time it is necessary to add the relevant intermediate Supply/Exhaust module.

Series 2500 OPTYMA-F solenoid valve manifolds managed by multipoint connection are "well tried components"

	Well-tried component	- The product is a well-tried product for a safety-related application according to ISO 13849-1. - The relevant basic and well-tried safety principles according ISO 13849-2 for this product are fulfilled. - The suitability of the product for a precise application must be verified and confirmed by the user.
B_{10d}	50.000.000	

2

General:

CANopen® module is directly integrated on Optyma-F solenoid valves manifold via a 37 poles connector, normally used for multipolar cable connection.
Optyma-F solenoid valves connected to node must be PNP equivalent (final 02 in ordering code).
The node can be easily installed also on solenoid valves manifold already mounted on equipment.
Module can manage up to 32 solenoid valves, and, in the same time, a max number of 4 Input modules 5225.08F or a max number of 2 Input modules 5225.25F.
CANopen® module recognizes automatically the presence of the Input modules on power on.
Regardless of the number of Input modules connected, the managable solenoid valves are 32.
Node power supply is made by a M12 4P male circular connector.
The separation between node 24 VDC Power supply and outputs 24 VDC allows to switch off the outputs maintaning powered the node and inputs, if present.
Connection to Bus CANopen® is possible via 2 M12 5P male - female circular connectors; these two are connected in parallel and according to CiA Draft Recommendation 303-1 (V. 1.3 : 30 December 2004).
Transmission speed can be set by 3 dip-switches.
The node address can be set by 6 dip-switches using BCD numeration.
The module includes an internal terminating resistance that can be activated by a dip-switch.

Ordering code

5525.32F

Scheme / Overall dimensions and I/O layout :

POWER SUPPLY connector

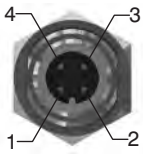

M12 4P MALE

PIN	DESCRIPTION
1	+24 VDC (NODE & INPUTS)
2	NC
3	GND
4	+24 VDC (OUTPUTS)

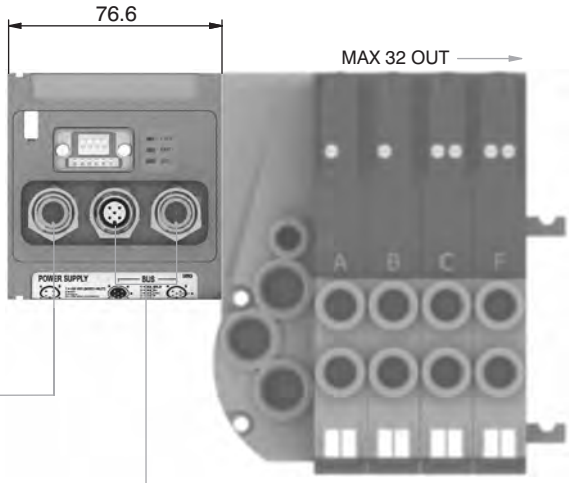

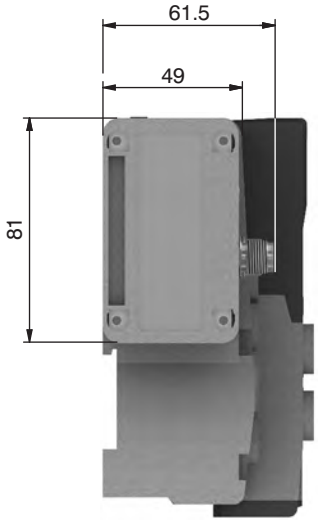

NETWORK connectors

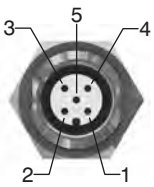

M12 5P FEMALE

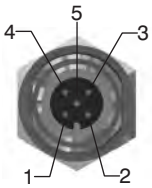

M12 5P MALE

PIN	SIGNAL	DESCRIPTION
1	CAN_SHLD	Optional CAN Shield
2	CAN_V+	Optional CAN external positive supply (Dedicated for supply of transceiver and Optocouplers, if galvanic isolation of the bus node applies)
3	CAN_GND	Ground / 0V / V-
4	CAN_H	CAN_H bus line (dominant high)
5	CAN_L	CAN_L bus line (dominant low)

Technical characteristics

	Model	5525.32F
	Specifications	CiA Draft Standard Proposal 301 V 4.10 (15 August 2006)
	Case	Reinforced technopolymer
Power supply	Power supply connection	M12 4P male connector (IEC 60947-5-2)
	Power supply voltage	+24 VDC +/- 10%
	Node consumption (without inputs)	30 mA
	Power supply diagnosis	Green LED PWR
Outputs	PNP equivalent outputs	+24 VDC +/- 10%
	Maximum current for output	100 mA
	Maximum output number	32
	Max output simultaneously actuated	32
Network	Network connectors	2 M12 5P connectors male-female type A (IEC 60947-5-2)
	Baud rate	10 - 20 - 50 - 125 - 250 - 500 - 800 - 1000 Kbit/s
	Addresses, possible numbers	From 1 to 63
	Max nodes in net	64 (slave + master)
	Bus maximum recommended length	100 m at 500 Kbit/s
	Bus diagnosis	Green LED + Red LED
	Configuration file	Available from our web site: http://www.pneumaxspa.com
	IP protection grade	IP65 when assembled
	Temperature range	From 0° to +50° C

General:

DeviceNet module is directly integrated on Optyma-F solenoid valves manifold via a 37 poles connector, normally used for multipolar cable connection.
Optyma-F solenoid valves connected to node must be PNP equivalent (final 02 in ordering code).
The node can be easily installed also on solenoid valves manifold already mounted on equipment.
Module can manage up to 32 solenoid valves, and, in the same time, a max number of 4 Input modules 5225.08F or a max number of 2 Input modules 5225.25F.
DeviceNet module recognizes automatically the presence of the Input modules on power on.
Regardless of the number of Input modules connected, the managable solenoid valves are 32.
Node power supply is made by a M12 4P male circular connector.
The separation between node 24 VDC Power supply and outputs 24 VDC allows to switch off the outputs maintaning powered the node and inputs, if present.
Connection to Bus DeviceNet is possible via 2 M12 5P male - female circular connectors; these two are connected in parallel and according to DeviceNet Specifications Volume I, release 2.0.
Transmission speed can be set by 3 dip-switches.
The node address can be set by 6 dip-switches using BCD numeration.
The module includes an internal terminating resistance that can be activated by a dip-switch.

Ordering code

5425.32F

Scheme / Overall dimensions and I/O layout :

POWER SUPPLY connector

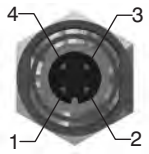

M12 4P MALE

PIN	DESCRIPTION
1	+24 VDC (NODE & INPUTS)
2	NC
3	GND
4	+24 VDC (OUTPUTS)

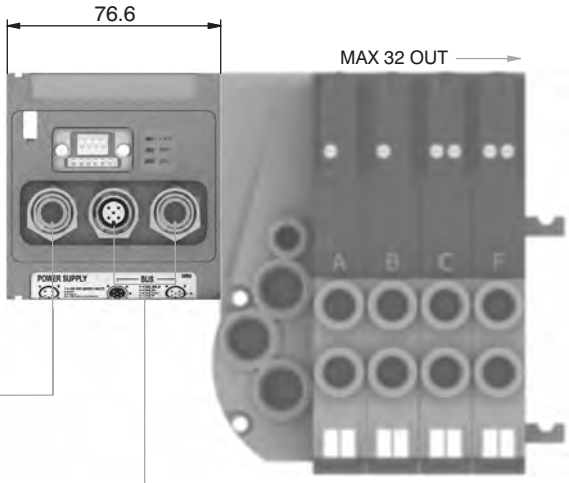

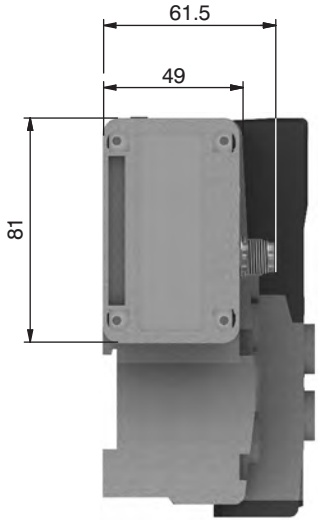

NETWORK connectors

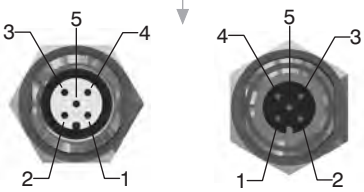

M12 5P FEMALE **M12 5P MALE**

PIN	SIGNAL	DESCRIPTION
1	CAN_SHLD	Optional CAN Shield
2	CAN_V+	Optional CAN external positive supply (Dedicated for supply of transceiver and Optocouplers, if galvanic isolation of the bus node applies)
3	CAN_GND	Ground / 0V / V-
4	CAN_H	CAN_H bus line (dominant high)
5	CAN_L	CAN_L bus line (dominant low)

Technical characteristics

	Model	5425.32F
	Specifications	DeviceNet Specifications Volume I, release 2.0.
	Case	Reinforced technopolymer
Power supply	Power supply connection	M12 4P male connector (IEC 60947-5-2)
	Power supply voltage	+24 VDC +/- 10%
	Node consumption (without inputs)	30 mA
	Power supply diagnosis	Green LED PWR
Outputs	PNP equivalent outputs	+24 VDC +/- 10%
	Maximum current for output	100 mA
	Maximum output number	32
	Max output simultaneously actuated	32
Network	Network connectors	2 M12 5P connectors male-female type A (IEC 60947-5-2)
	Baud rate	125 - 250 - 500 Kbit/s
	Addresses, possible numbers	From 1 to 63
	Max nodes in net	64 (slave + master)
	Bus maximum recommended length	100 m at 500 Kbit/s
	Bus diagnosis	Green LED + Red LED
	Configuration file	Available from our web site: http://www.pneumaxspa.com
	IP protection grade	IP65 when assembled
	Temperature range	From 0° to +50° C

2

General:

PROFIBUS DP module is directly integrated on Optyma-F solenoid valves manifold via a 37 poles connector, normally used for multipolar cable connection.
Optyma-F solenoid valves connected to node must be PNP equivalent (final 02 in ordering code).
The node can be easily installed also on solenoid valves manifold already mounted on equipment.
Module can manage up to 32 solenoid valves, and, in the same time, a max number of 4 Input modules 5225.08F or a max number of 4 Input modules 5225.25F.
PROFIBUS DP module recognizes automatically the presence of the Input modules on power on.
Regardless of the number of Input modules connected, the managable solenoid valves are 32.
Node power supply is made by a M12 4P male circular connector.
The separation between node 24 VDC Power supply and outputs 24 VDC allows to switch off the outputs maintaning powered the node and inputs, if present.
Connection to Bus PROFIBUS DP is possible via 2 M12 type B 5P male - female circular connectors; these two are connected in parallel and according to PROFIBUS Interconnection Technology (Version 1.1 : August 2001).
The node address can be set using BCD numeration: 4 dip-switches for the units and 4 dip-switches for the tens.
The module includes an internal terminating resistance that can be activated by 2 dip-switches.

Ordering code

5325.32F

Scheme / Overall dimensions and I/O layout :

POWER SUPPLY connector

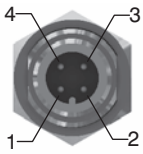

M12 4P MALE

PIN	DESCRIPTION
1	+24 VDC (NODE & INPUTS)
2	NC
3	GND
4	+24 VDC (OUTPUTS)

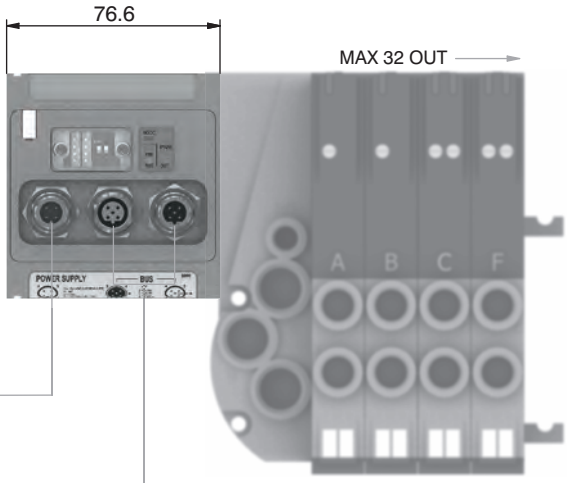

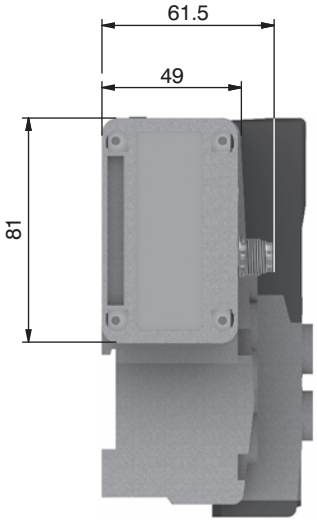

NETWORK connectors

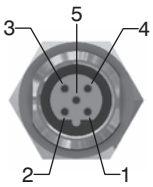

M12 5P FEMALE

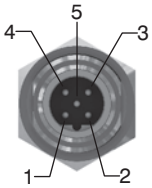

M12 5P MALE

PIN	SIGNAL	DESCRIPTION
1	VP	Power supply plus, (P5V)
2	A-line	Receive / Transmit data -N, A-line
3	DGND	Data Ground (reference potential to VP)
4	B-line	Receive / Transmit data -plus, B-line
5	SHIELD	Shield or PE

Technical characteristics

	Model	5325.32F
	Specifications	PROFIBUS DP
	Case	Reinforced technopolymer
Power supply	Power supply connection	M12 4P male connector (IEC 60947-5-2)
	Power supply voltage	+24 VDC +/- 10%
	Node consumption (without inputs)	50 mA
	Power supply diagnosis	Green LED PWR / Green LED OUT
Outputs	PNP equivalent outputs	+24 VDC +/- 10%
	Maximum current for output	100 mA
	Maximum output number	32
	Max output simultaneously actuated	32
Network	Network connectors	2 M12 5P male-female connectors type B
	Baud rate	9,6 - 19,2 - 93,75 - 187,5 - 500 - 1500 - 3000 - 6000 - 12000 Kbit/s
	Addresses, possible numbers	From 1 to 99
	Max nodes in net	100 (slave + master)
	Bus maximum recommended length	100 m at 12 Mbit/s - 1200 m at 9,6 Kbit/s
	Bus diagnosis	Green LED + Red LED
	Configuration file	Available from our web site: http://www.pneumaxspa.com
	IP protection grade	IP65 when assembled
	Temperature range	From 0° to +50° C

General:

EtherCAT® module is directly integrated on Optyma-F solenoid valves manifold via a 37 poles connector, normally used for multipolar cable connection.
Optyma-F solenoid valves connected to node must be PNP equivalent (final 02 in ordering code).
The node can be easily installed also on solenoid valves manifold already mounted on equipment.
Module can manage up to 32 solenoid valves, and, in the same time, a max number of 4 Input modules 5225.08F or a max number of 2 Input modules 5225.25F.
The EtherCAT® module, regardless the number of Input module connected, reports to have connected 4 Input modules.
Regardless of the number of Input modules connected, the managable solenoid valves are 32.
Node power supply is made by a M12 4P male circular connector.
The separation between node 24 VDC Power supply and outputs 24 VDC allows to switch off the outputs maintaning powered the node and inputs, if present.
Connection to Bus EtherCAT® is possible via 2 M12 4P type D female circular connectors. These two connectors lead the signal to two different communication ports, so they are not connected in parallel.
The node address is assigned during configuration.
Note: 5700 series has a different configuration file from series 5600.

Ordering code

5725.32F.EC

2

Scheme / Overall dimensions and I/O layout :

POWER SUPPLY connector

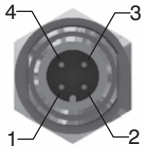

M12 4P MALE

PIN	DESCRIPTION
1	+24 VDC (NODE & INPUTS)
2	NC
3	GND
4	+24 VDC (OUTPUTS)

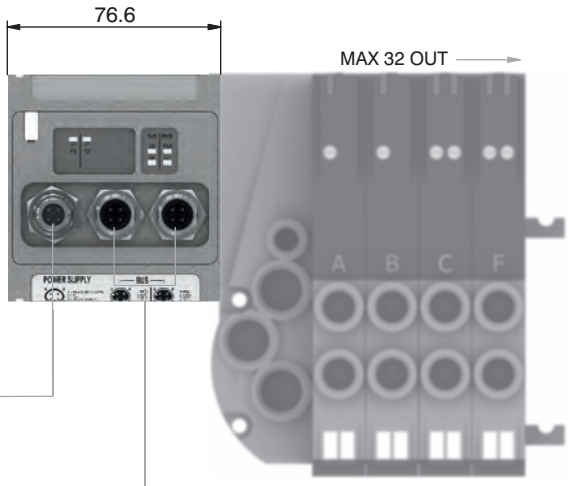

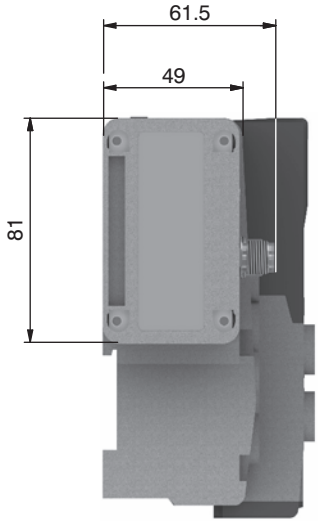

NETWORK connectors

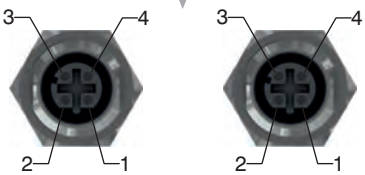

M12 4P FEMALE **M12 4P FEMALE**

PIN	SIGNAL	DESCRIPTION
1	TX+	Ethernet Transmit High
2	RX+	Ethernet Receive High
3	TX-	Ethernet Transmit Low
4	RX-	Ethernet Receive Low

Technical characteristics

	Model	5725.32F.EC
	Specifications	EtherCAT® Specifications ETG.1000 series
	Case	Reinforced technopolymer
Power supply	Power supply connection	M12 4P male connector (IEC 60947-5-2)
	Power supply voltage	+24 VDC +/- 10%
	Node consumption (without inputs)	400 mA
	Power supply diagnosis	Green LED PWR / Green LED OUT
Outputs	PNP equivalent outputs	+24 VDC +/- 10%
	Maximum current for output	100 mA
	Maximum output number	32
	Max output simultaneously actuated	32
Network	Network connectors	2 M12 4P female connectors type D (IEC 61076-2-101)
	Baud rate	100 Mbit/s
	Addresses, possible numbers	From 1 to 65535
	Max nodes in net	65536 (slave + master)
	Maximum distance between 2 nodes	100 m
	Bus diagnosis	1 green and 1 red LED for status + 2 LEDs for link & activity
	Configuration file	Available from our web site: http://www.pneumaxspa.com
	IP protection grade	IP65 when assembled
	Temperature range	From 0° to +50° C

2

General:

PROFINET IO RT/IRT module is directly integrated on Optyma-F solenoid valves manifold via a 37 poles connector, normally used for multipolar cable connection.
Optyma-F solenoid valves connected to node must be PNP equivalent (final 02 in ordering code).
The node can be easily installed also on solenoid valves manifold already mounted on equipment.
Module can manage up to 32 solenoid valves, and, in the same time, a max number of 4 Input modules 5225.08F or a max number of 4 Input modules 5225.25F.
The PROFINET IO RT/IRT module, regardless the number of Input module connected, reports to have connected 8 Input modules.
Regardless of the number of Input modules connected, the managable solenoid valves are 32.
Node power supply is made by a M12 4P male circular connector.
The separation between node 24 VDC Power supply and outputs 24 VDC allows to switch off the outputs maintaning powered the node and inputs, if present.
Connection to Bus PROFINET IO RT/IRT is possible via 2 M12 4P type D female circular connectors. These two connectors lead the signal to two different communication ports, so they are not connected in parallel.
The node address is assigned during configuration.

Ordering code

5725.32F.PN

Scheme / Overall dimensions and I/O layout :

POWER SUPPLY connector

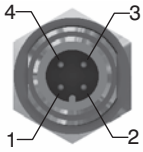

M12 4P MALE

PIN	DESCRIPTION
1	+24 VDC (NODE & INPUTS)
2	NC
3	GND
4	+24 VDC (OUTPUTS)

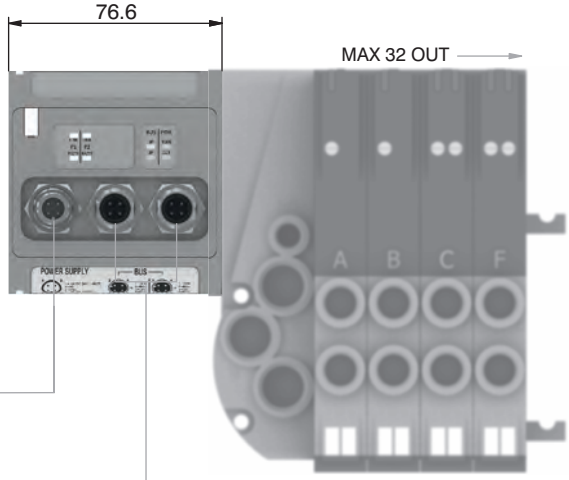

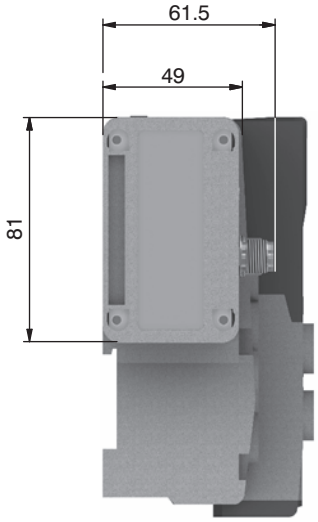

NETWORK connectors

M12 4P FEMALE

M12 4P FEMALE

PIN	SIGNAL	DESCRIPTION
1	TX+	Ethernet Transmit High
2	RX+	Ethernet Receive High
3	TX-	Ethernet Transmit Low
4	RX-	Ethernet Receive Low

Technical characteristics

	Model	5725.32F.PN
	Specifications	PROFINET IO RT/IRT
	Case	Reinforced technopolymer
Power supply	Power supply connection	M12 4P male connector (IEC 60947-5-2)
	Power supply voltage	+24 VDC +/- 10%
	Node consumption (without inputs)	400 mA
	Power supply diagnosis	Green LED PWR / Green LED OUT
Outputs	PNP equivalent outputs	+24 VDC +/- 10%
	Maximum current for output	100 mA
	Maximum output number	32
	Max output simultaneously actuated	32
Network	Network connectors	2 M12 4P female connectors type D (IEC 61076-2-101)
	Baud rate	100 Mbit/s
	Addresses, possible numbers	As an IP address
	Max nodes in net	As an Ethernet Network
	Maximum distance between 2 nodes	100 m
	Bus diagnosis	1 green and 1 red LED for status + 4 LEDs for link & activity
	Configuration file	Available from our web site: http://www.pneumaxspa.com
	IP protection grade	IP65 when assembled
	Temperature range	From 0° to +50° C

General:

EtherNet/IP module is directly integrated on Optyma-F solenoid valves manifold via a 37 poles connector, normally used for multipolar cable connection.
Optyma-F solenoid valves connected to node must be PNP equivalent (final 02 in ordering code).
The node can be easily installed also on solenoid valves manifold already mounted on equipment.
Module can manage up to 32 solenoid valves, and, in the same time, a max number of 4 Input modules 5225.08F or a max number of 4 Input modules 5225.25F.
The EtherNet/IP module, regardless the number of Input module connected, reports to have connected 8 Input modules.
Regardless of the number of Input modules connected, the managable solenoid valves are 32.
Node power supply is made by a M12 4P male circular connector.
The separation between node 24 VDC Power supply and outputs 24 VDC allows to switch off the outputs maintaning powered the node and inputs, if present.
Connection to Bus EtherNet/IP is possible via 2 M12 4P type D female circular connectors. These two connectors lead the signal to two different communication ports, so they are not connected in parallel.
The node address is assigned during configuration.

Ordering code

5725.32F.EI

Scheme / Overall dimensions and I/O layout :

POWER SUPPLY connector

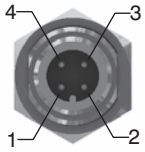

M12 4P MALE

PIN	DESCRIPTION
1	+24 VDC (NODE & INPUTS)
2	NC
3	GND
4	+24 VDC (OUTPUTS)

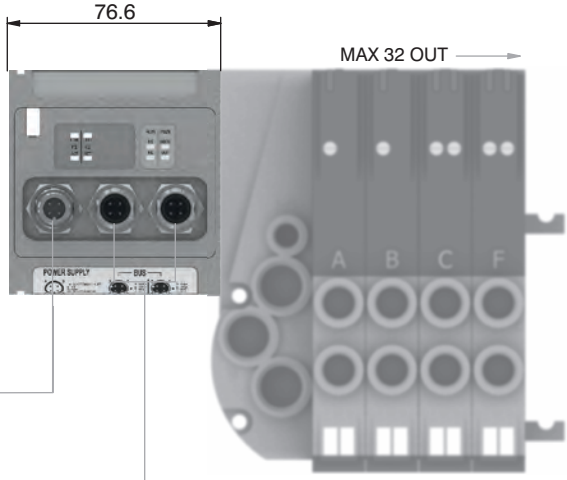

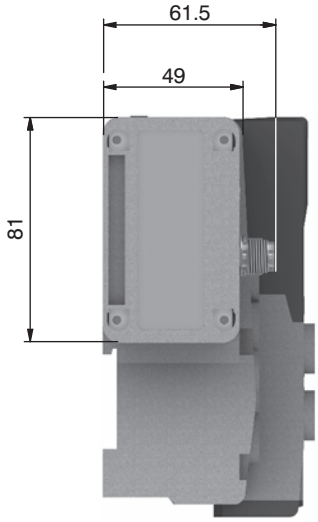

NETWORK connectors

M12 4P FEMALE

M12 4P FEMALE

PIN	SIGNAL	DESCRIPTION
1	TX+	Ethernet Transmit High
2	RX+	Ethernet Receive High
3	TX-	Ethernet Transmit Low
4	RX-	Ethernet Receive Low

Technical characteristics

	Model	5725.32F.EI
	Specifications	The EtherNet/IP Specification
	Case	Reinforced technopolymer
Power supply	Power supply connection	M12 4P male connector (IEC 60947-5-2)
	Power supply voltage	+24 VDC +/- 10%
	Node consumption (without inputs)	400 mA
	Power supply diagnosis	Green LED PWR / Green LED OUT
Outputs	PNP equivalent outputs	+24 VDC +/- 10%
	Maximum current for output	100 mA
	Maximum output number	32
	Max output simultaneously actuated	32
Network	Network connectors	2 M12 4P female connectors type D (IEC 61076-2-101)
	Baud rate	100 Mbit/s
	Addresses, possible numbers	As an IP address
	Max nodes in net	As an Ethernet Network
	Maximum distance between 2 nodes	100 m
	Bus diagnosis	1 green and 1 red LED for status + 4 LEDs for link & activity
	Configuration file	Available from our web site: http://www.pneumaxspa.com
	IP protection grade	IP65 when assembled
	Temperature range	From 0° to +50° C

2

General:

Powerlink module is directly integrated on Optyma-F solenoid valves manifold via a 37 poles connector, normally used for multipolar cable connection.
Optyma-F solenoid valves connected to node must be PNP equivalent (final 02 in ordering code).
The node can be easily installed also on solenoid valves manifold already mounted on equipment.
Module can manage up to 32 solenoid valves, and, in the same time, a max number of 4 Input modules 5225.08F or a max number of 4 Input modules 5225.25F.
The Powerlink module, regardless the number of Input module connected, reports to have connected 8 Input modules.
Regardless of the number of Input modules connected, the managable solenoid valves are 32.
Node power supply is made by a M12 4P male circular connector.
The separation between node 24 VDC Power supply and outputs 24 VDC allows to switch off the outputs maintaning powered the node and inputs, if present.
Connection to Bus Powerlink is possible via 2 M12 4P type D female circular connectors. These two connectors lead the signal to two different communication ports, so they are not connected in parallel.
The node address is assigned during configuration.

Ordering code

5725.32F.PL

Scheme / Overall dimensions and I/O layout :

POWER SUPPLY connector

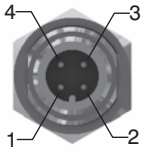

M12 4P MALE

PIN	DESCRIPTION
1	+24 VDC (NODE & INPUTS)
2	NC
3	GND
4	+24 VDC (OUTPUTS)

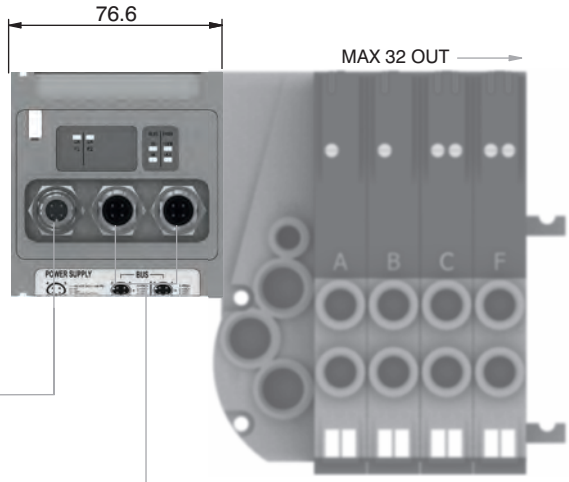

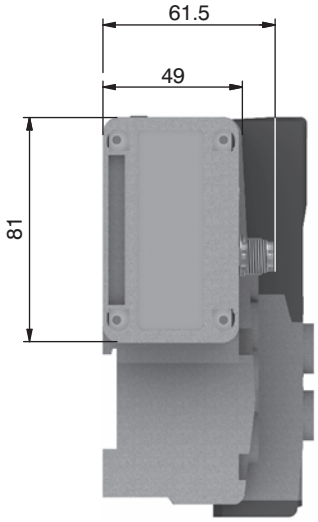

NETWORK connectors

M12 4P FEMALE

M12 4P FEMALE

PIN	SIGNAL	DESCRIPTION
1	TX+	Ethernet Transmit High
2	RX+	Ethernet Receive High
3	TX-	Ethernet Transmit Low
4	RX-	Ethernet Receive Low

Technical characteristics

	Model	5725.32F.PL
	Specifications	Ethernet POWERLINK Communication Profile Specifications
	Case	Reinforced technopolymer
Power supply	Power supply connection	M12 4P male connector (IEC 60947-5-2)
	Power supply voltage	+24 VDC +/- 10%
	Node consumption (without inputs)	400 mA
	Power supply diagnosis	Green LED PWR / Green LED OUT
Outputs	PNP equivalent outputs	+24 VDC +/- 10%
	Maximum current for output	100 mA
	Maximum output number	32
	Max output simultaneously actuated	32
Network	Network connectors	2 M12 4P female connectors type D (IEC 61076-2-101)
	Baud rate	100 Mbit/s
	Addresses, possible numbers	239
	Max nodes in net	240
	Maximum distance between 2 nodes	100 m
	Bus diagnosis	1 green and 1 red LED for status + 2 LEDs for link & activity
	Configuration file	Available from our web site: http://www.pneumaxspa.com
	IP protection grade	IP65 when assembled
	Temperature range	From 0° to +50° C

General:

Modbus/TCP module is directly integrated on Optyma-F solenoid valves manifold via a 37 poles connector, normally used for multipolar cable connection.
Optyma-F solenoid valves connected to node must be PNP equivalent (final 02 in ordering code).
The node can be easily installed also on solenoid valves manifold already mounted on equipment.
Module can manage up to 32 solenoid valves, and, in the same time, a max number of 4 Input modules 5225.08F or a max number of 4 Input modules 5225.25F.
The Modbus/TCP module, regardless the number of Input module connected, reports to have connected 8 Input modules.
Regardless of the number of Input modules connected, the managable solenoid valves are 32.
Node power supply is made by a M12 4P male circular connector.
The separation between node 24 VDC Power supply and outputs 24 VDC allows to switch off the outputs maintaning powered the node and inputs, if present.
Connection to Bus Modbus/TCP is possible via 2 M12 4P type D female circular connectors. These two connectors lead the signal to two different communication ports, so they are not connected in parallel.
The node address is assigned during configuration.

Ordering code

5725.32F.MT

Scheme / Overall dimensions and I/O layout :

POWER SUPPLY connector

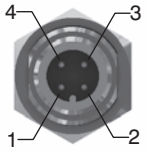

M12 4P MALE

PIN	DESCRIPTION
1	+24 VDC (NODE & INPUTS)
2	NC
3	GND
4	+24 VDC (OUTPUTS)

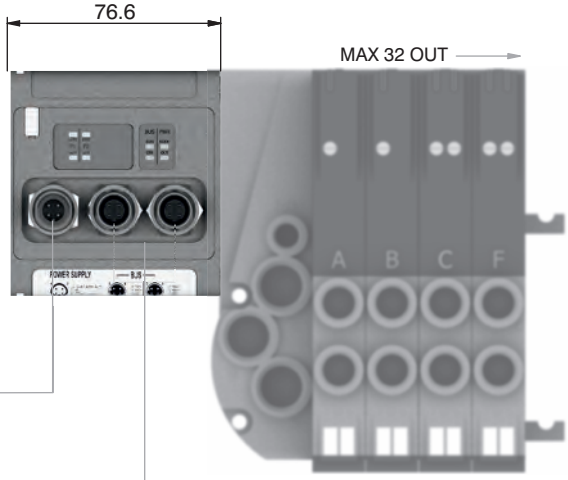

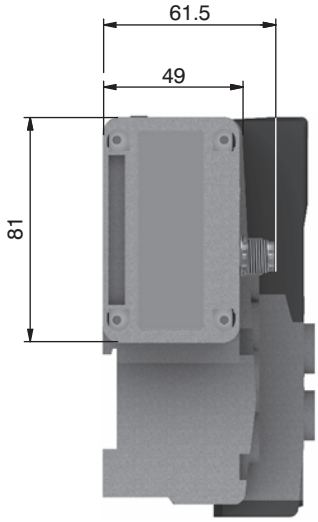

NETWORK connectors

M12 4P FEMALE

M12 4P FEMALE

PIN	SIGNAL	DESCRIPTION
1	TX+	Ethernet Transmit High
2	RX+	Ethernet Receive High
3	TX-	Ethernet Transmit Low
4	RX-	Ethernet Receive Low

Technical characteristics

	Model	5725.32F.MT
	Specifications	MODBUS Application Protocol Specification V1.1a, June 4, 2004
	Case	Reinforced technopolymer
Power supply	Power supply connection	M12 4P male connector (IEC 60947-5-2)
	Power supply voltage	+24 VDC +/- 10%
	Node consumption (without inputs)	400 mA
	Power supply diagnosis	Green LED PWR / Green LED OUT
Outputs	PNP equivalent outputs	+24 VDC +/- 10%
	Maximum current for output	100 mA
	Maximum output number	32
	Max output simultaneously actuated	32
Network	Network connectors	2 M12 4P female connectors type D (IEC 61076-2-101)
	Baud rate	100 Mbit/s
	Addresses, possible numbers	248
	Max nodes in net	248
	Maximum distance between 2 nodes	100 m
	Bus diagnosis	1 green and 1 red LED for status + 2 LEDs for link & activity
	Configuration file	Modbus/TCP nodes don't require configuration file
	IP protection grade	IP65 when assembled
	Temperature range	From 0° to +50° C

2

General:

Modules have 8 connectors M8 3P female.

The Inputs are PNP equivalent 24 VDC ±10%.
To each connector it is possible to plug both 2 wires Inputs (switches, magnetic switches pressure switches, etc.) or 3 wires Inputs (proximity, photocells, electronic sensors, etc).
The maximum current available for all 8 Inputs is 200 mA.
Each module includes a 200 mA self-mending fuse. If a short circuit or a overcharge (overall current >200mA) occur the safety device acts cutting the 24 VDC power supply to all M8 connectors on the module and switching off the green LED PWR. Any other Input module connected to the node will remain powered and will function correctly.
Once the cause of the fault disappears the green LED PWR lights up indicating the ON state and the node will re-start to operate.
The maximum number of Input modules supported is 4.

Ordering code

5225.08F

Scheme / Overall dimensions and I/O layout :

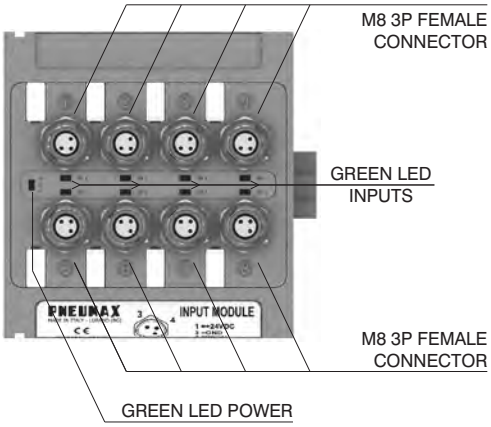

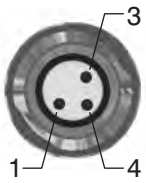

PIN	DESCRIPTION
1	+24 VDC
4	INPUT
3	GND

Module 1

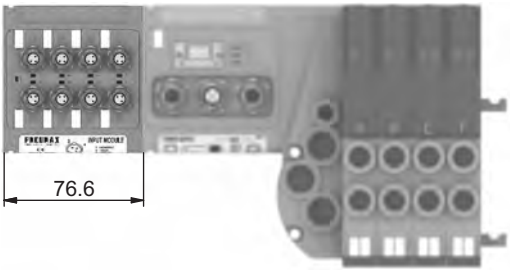

Module 2 Module 1

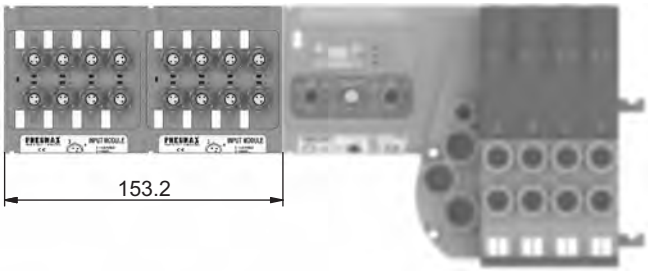

Module 3 Module 2 Module 1

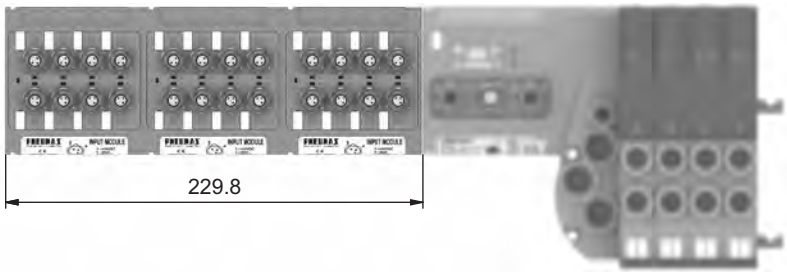

Module 4 Module 3 Module 2 Module 1

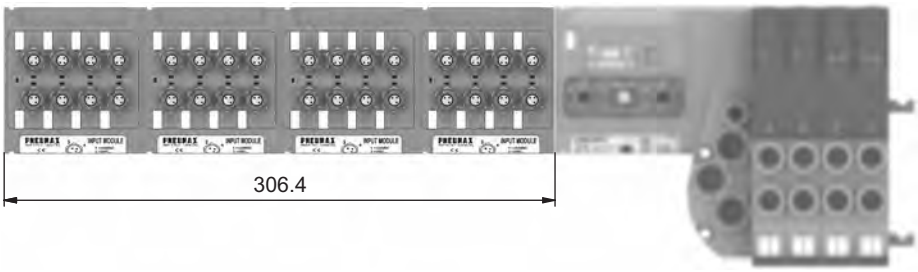

General :

Modules are fitted with SUB-D 25 pin female connector.

The Inputs are PNP equivalent 24VDC ±10%.
To the connector it is possible to connect both 2 wires Inputs (switches, magnetic switches pressure switches etc.) or 3 wires (proximity, photocells, electronic end of stroke sensors etc).
The maximum current available for all 16 Inputs is 750 mA.
Each module includes a 750 mA self-mending fuse. Should a short circuit or a overcharge (overall current >750mA) occur the safety device intervenes cutting the 24VDC power supply to all pins and switching off the green LED PWR. Any other Input module connected to the node will remain powered and will function correctly.
Once the cause of the fault is removed the green LED lights up indicating the ON state and the node will re-start to operate. This16 Inputs module is counted as two 8 Inputs modules.

The Maximum number of 16 Inputs modules supported is 2 for CANopen®, DeviceNet and EtherCAT®.
The Maximum number of 16 Inputs modules supported is 4 for PROFIBUS DP, PROFINET IO RT/IRT, EtherNet/IP and Powerlink.

Ordering code

5225.25F

Scheme / Overall dimensions and I/O layout :

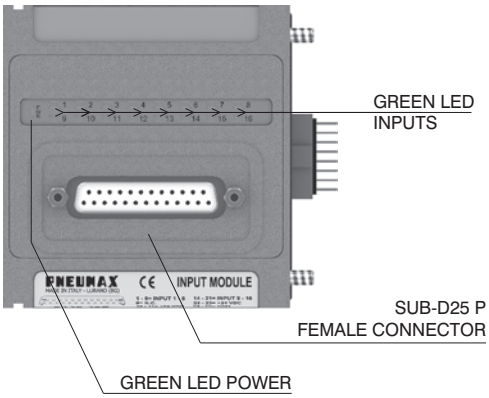

Module 1

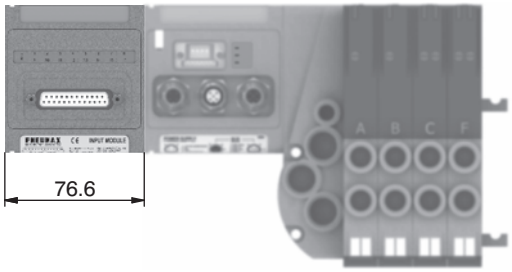

Module 2 Module 1

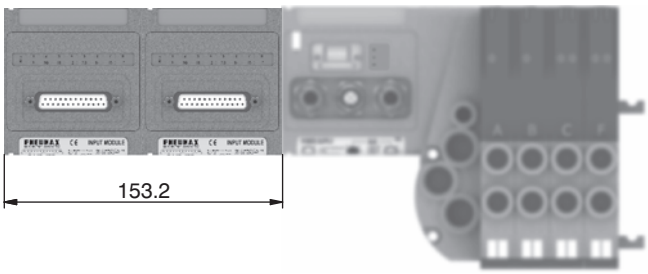

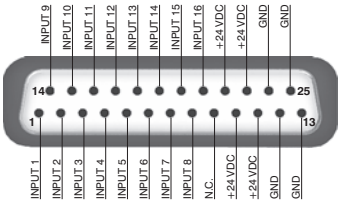

General :

This module is fitted with two M8 3 pin female connectors.

With this module is possible to read two analogue inputs (voltage or current).
The inputs are sampled at 12 bit.
For practicality the sampled value is transmitted with 16 bit, of which the four less significant are fixed at zero.

Available models:
5225.2T.00F (voltage signal 0 - 10V);
5225.2T.01F (voltage signal 0 - 5V);
5225.2C.00F (current signal 4 - 20mA);
5225.2C.01F (current signal 0 - 20mA).

Each module includes a 300 mA self-mending fuse. Should a short circuit or a overcharge (overall current >300mA) occur the safety device intervenes cutting the 24VDC power supply to all M8 connectors on the module and switching off the green LED PWR. Any other Input module connected to the node will remain powered and will function correctly.
Once the cause of the fault is removed the green LED lights up indicating the ON state and the node will re-start to operate.

This module is counted as four 8 digital Inputs modules.

The Maximum number of 2 analogue Inputs modules supported is 1 for CANopen®, DeviceNet, PROFIBUS DP and EtherCAT®.
The Maximum number of 2 analogue Inputs modules supported is 2 for PROFINET IO RT/IRT, EtherNet/IP and Powerlink.

Ordering code

5225.2 _ . _ _F

Scheme / Overall dimensions and I/O layout :

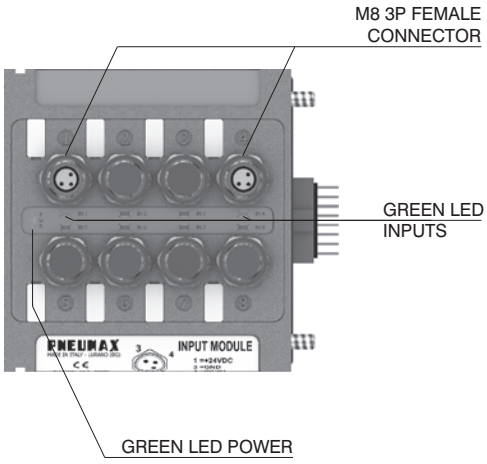

Module 1

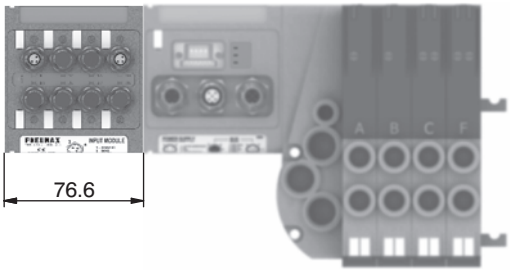

Module 2 Module 1

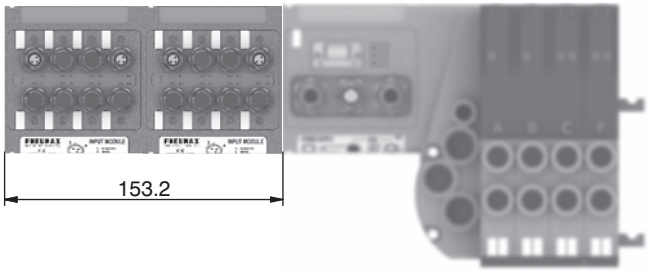

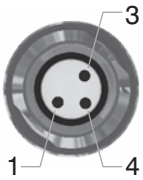

PIN	DESCRIPTION
1	+24 VDC
4	INPUT
3	GND

M12A 4P female Socket

Ordering code

5312A.F04.00

Power supply straight connector.

Upper view Slave connector

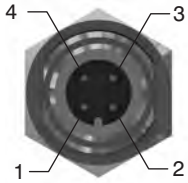

PIN	DESCRIPTION
1	+24 VDC Node
2	
3	0 V
4	+24 VDC Output

M8 3P male Plug

Ordering code

5308A.M03.00

Input straight connector.

Upper view Slave connector

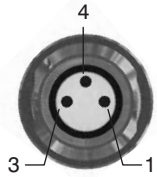

PIN	DESCRIPTION
1	+24 VDC
4	INPUT
3	GND

M12A 5P female Socket

Ordering code

5312A.F05.00

Network straight connector: for Bus CANOpen®, DeviceNet.

Upper view Slave connector

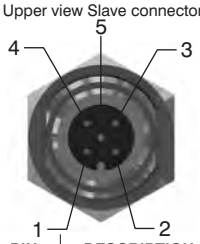

PIN	DESCRIPTION
1	(CAN_SHIELD)
2	(CAN_V+)
3	CAN_GND
4	CAN_H
5	CAN_L

M12A 5P male Plug

Ordering code

5312A.M05.00

Network straight connector: for BUS CANOpen®, DeviceNet.

Upper view Slave connector

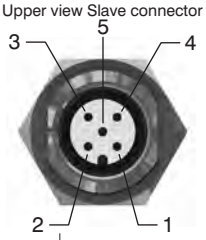

PIN	DESCRIPTION
1	(CAN_SHIELD)
2	(CAN_V+)
3	CAN_GND
4	CAN_H
5	CAN_L

M12B 5P female Plug

Ordering code

5312B.F05.00

Network straight connector: for Bus PROFIBUS DP.

Upper view Slave connector

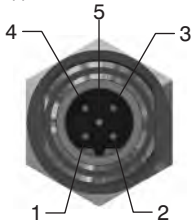

PIN	DESCRIPTION
1	Power Supply
2	A-line
3	DGND
4	B-line
5	SHIELD

M12B 5P male Plug

Ordering code

5312B.M05.00

Network straight connector: for BUS PROFIBUS DP.

Upper view Slave connector

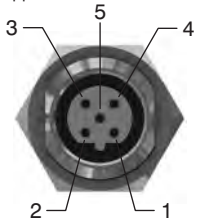

PIN	DESCRIPTION
1	Power Supply
2	A-line
3	DGND
4	B-line
5	SHIELD

M12D 4P male Plug

Ordering code

5312D.M04.00

Network straight connector: for EtherCAT®, PROFINET IO RT/IRT, EtherNet/Ip Powerlink, and Modbus/TCP.

Upper view Slave connector

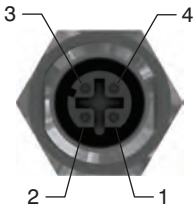

PIN	SIGNAL	DESCRIPTION
1	TX+	Ethernet Transmit High
2	RX+	Ethernet Receive High
3	TX-	Ethernet Transmit Low
4	RX-	Ethernet Receive Low

M12 Plug

Ordering code

5300.T12

M8 Plug

Ordering code

5300.T08

Trademarks: EtherCAT® is registered trademark and patented technology, licensed by Beckhoff Automation GmbH, Germany.

2

Manifold Layout configuration

LEFT ENDPLATE

A3 = 37 poles - Self feeding
E3 = 37 poles - External feeding

RIGHT ENDPLATE

U0 = Closed
U2 = 25 Poles
U3 = 37 Poles

32 OUT VERSION

C3 = CANopen® 32OUT
D3 = DeviceNet 32OUT
P3 = PROFIBUS 32OUT
A3 = EtherCAT® 32OUT (5700 Series)
I3 = EtherNet / IP 32OUT
N3 = PROFINET IO RT/IRT 32OUT
L3 = Powerlink 32OUT
M3 = Modbus/TCP 32OUT

INPUT MODULES

A = No module
D1= 8 M8 digital Inputs module
D3= 16 digital Inputs (SUB-D 25) module
T1= 2 analogue Inputs 0-5V module
T2= 2 analogue Inputs 0-10V module
C1= 2 analogue Inputs 0-20mA module
C2= 2 analogue Inputs 4-20mA module

I/O MODULE

M8
(Requires 25 poles right endplate)

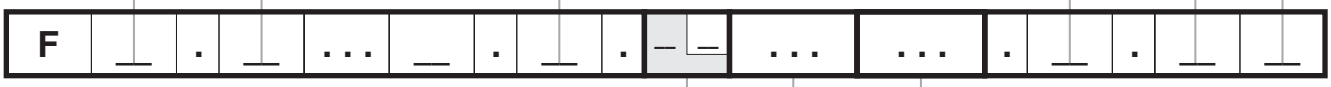

MODUL CONFIGURATION

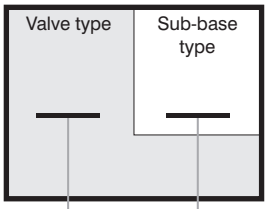

ACCESSORIES CONFIGURATION

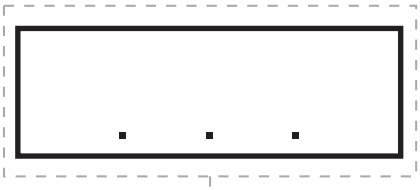

SHORT CODE FUNCTION / CONNECTION :

A1= 5/2 SOL.-SPRING + BASE TYPE 1 (1 electrical signal occupied)
A2= 5/2 SOL.-SPRING + BASE TYPE 2 (2 electrical signals occupied)
B1= 5/2 SOL.-DIFFERENTIAL + BASE TYPE 1 (1 electrical signal occupied)
B2= 5/2 SOL.-DIFFERENTIAL + BASE TYPE 2 (2 electrical signals occupied)
C2= 5/2 SOL.-SOL. + BASE TYPE 2 (2 electrical signals occupied)
E2= 5/3 CC SOL.-SOL. + BASE TYPE 2 (2 electrical signals occupied)
F2= 2x3/2 NC-NC (= 5/3 OC) SOL.-SOL.+BASE TYPE 2 (2 electrical signals occupied)
G2= 2x3/2 NO-NO (= 5/3 PC) SOL.-SOL.+BASE TYPE 2 (2 electrical signals occupied)
H2= 2x3/2 NC-NO SOL.-SOL. + BASE TYPE 2 (2 electrical signals occupied)
I2= 2x3/2 NO-NC SOL.-SOL. + BASE TYPE 2 (2 electrical signals occupied)
T1= FREE VALVE SPACE PLUG + BASE FOR MONOSTABLE VALVE
T2= FREE VALVE SPACE PLUG + BASE FOR BISTABLE VALVE

ACCESSORIES

U2 = Power supply 2 positions module
U4 = Power supply 4 positions module
W = Intermediate supply & exhaust module
X = Diaphragm plug on pipe 1
Y = Diaphragm plug on pipe 3
Z = Diaphragm plug on pipe 5
XY = Diaphragm plug on pipe 1 & 3
ZX = Diaphragm plug on pipe 5 & 1
ZY = Diaphragm plug on pipe 5 & 3
ZXY = Diaphragm plug on pipe 5, 1 & 3

NOTE:
While configuring the manifold always be careful that the maximum number of electrical signals available is 32.
The use of monostable valve mounted on a base type 2 (2 electrical signals occupied) causes the loss of one electric signal. In this case the monostable valve can be replaced by a bistable valve. The diaphragms plugs are used to intercept the conduits 1,3 & 5 of the base. If it is necessary to interrupt more than one conduit in the same time then put in line the letters which identifies the position (for exemple : regarding the 3 & 5 conduits, put the Y & Z letters).
Should one or more conduits be cut more than one time it is necessary to add the relevant intermediate Supply/Exhaust module.

OPTYMA 32 -T

General characteristics

With the introduction of the “T” configuration of solenoid valves with integrated pneumatic connections fitted directly on the sub base the 2500 series (called OPTYMA) is now richer than ever.
Many technical features make the new product interesting:
- Flow rate of 800 Nl/min
- Low consumption coils placed all in one side of the valve
- Quick mounting of the valve to the base using just one screw
- Possibility to use different pressures along the manifold (including vacuum)
- Possibility to replace the valve without the need to disconnect the connections
- IP65 environmental protection
- Electrical connection directly integrated into the base, 32 electrical signals available (can be used to build up a manifold of 32 monostable valves, 16 bistable valves or any combination within that limit).

The electrical connection is made via 37 pin SUB-D connector.
Possibility to integrate with Field Bus modules (all the most common protocols will be available).
Possibility to connect input modules (even on the base that does not have the Field Bus module.
Large use of technopolymer material reduces the overall weight of the manifold.

"Shifting time of pneumatic directional control valves or moving parts, logic devices were measured in accordance to ISO 12238:2001, Pneumatic fluid power-Directional control valves-Measurement of shifting time".

Main characteristics

Integrated and optimized electrical connection system
IP65 protection degree
Only one 19mm size
Electrical line connections on one side
Monostable and bistable solenoid valves with the same size dimensions
Easy and fast manifold assembly - tie rod system to hold the sub bases together
All pneumatic connections (push-in) on the same side of the manifold

Construction characteristics

Body	Technopolymer
Operators	Technopolymer
Spools	Nikel plated steel / Technopolymer
Spacers	Technopolymer
Seals	NBR
Piston seals	NBR
Springs	AISI 302 stainless steel
Pistons	Technopolymer

Functions

5/2 MONOST. SOL. SPRING
5/2 MONOST. SOL. DIFFERENTIAL
5/2 BISTABLE SOL. SOL.
5/3 CC SOL. SOL.
2x3/2 NC-NC (= 5/3 OC) SOL. SOL.
2x3/2 NO-NO (= 5/3 PC) SOL. SOL.
2x3/2 NC-NO SOL. SOL.

Technical characteristics

Voltage	24 VDC ±10% PNP (NPN and AC on request)
Pilot consuption	1,3 Watt
Valve working pressure [1]	from vacuum to 10 bar max.
Pilot working pressure [12-14]	From 3 to 7 bar max.
Operating temperature	-5°C+50°C
Protection degree	IP65
Life (standard operating conditions)	50.000.000
Fluid	Filtered and lubricated air or not (if lubricated air, the lubrication must be continuous)

2

Solenoid - Spring

Ordering code

2541.52.00.39.Ⓥ

Ⓥ	VOLTAGE
	02 = 24 VDC PNP
	12 = 24 VDC NPN
	05 = 24 VAC

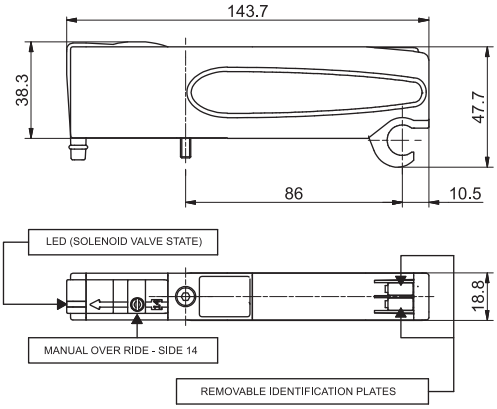

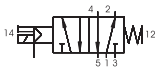

SHORT FUNCTION CODE "A"
"Shifting time of pneumatic directional control valves or moving parts, logic devices were measured in accordance to ISO 12238:2001, Pneumatic fluid power - Directional control valves - Measurement of shifting time."

Operational characteristic

Fluid	Flow rate at 6 bar with Δp=1 (Nl/min)	Responce time according to ISO 12238, activation time (ms)	Responce time according to ISO 12238, deactivation time (ms)	Working pressure (bar)	Pressure range (bar) pilots 12-14	Temperature °C	Weight (gr.)
Filtered air, with or without lubrication	750	14	40	From vacuum to 10	3 - 7 bar	-5° / +50°	129

Solenoid - Differential

Ordering code

2541.52.00.36.Ⓥ

Ⓥ	VOLTAGE
	02 = 24 VDC PNP
	12 = 24 VDC NPN
	05 = 24 VAC

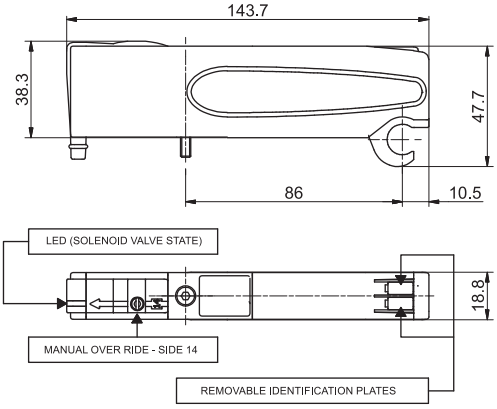

SHORT FUNCTION CODE "B"
"Shifting time of pneumatic directional control valves or moving parts, logic devices were measured in accordance to ISO 12238:2001, Pneumatic fluid power - Directional control valves - Measurement of shifting time."

Operational characteristic

Fluid	Flow rate at 6 bar with Δp=1 (Nl/min)	Responce time according to ISO 12238, activation time (ms)	Responce time according to ISO 12238, deactivation time (ms)	Working pressure (bar)	Pressure range (bar) pilots 12-14	Temperature °C	Weight (gr.)
Filtered air, with or without lubrication	750	20	29	From vacuum to 10	3 - 7 bar	-5° / +50°	126

Solenoid - Solenoid

Ordering code

2541.52.00.35.Ⓥ

Ⓥ	VOLTAGE
	02 = 24 VDC PNP
	12 = 24 VDC NPN
	05 = 24 VAC

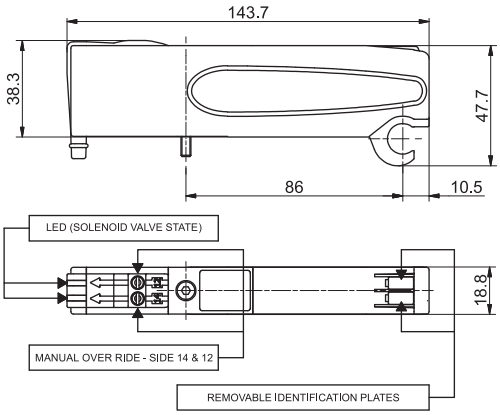

SHORT FUNCTION CODE "C"
"Shifting time of pneumatic directional control valves or moving parts, logic devices were measured in accordance to ISO 12238:2001, Pneumatic fluid power - Directional control valves - Measurement of shifting time."

Operational characteristic

Fluid	Flow rate at 6 bar with Δp=1 (Nl/min)	Responce time according to ISO 12238, activation time (ms)	Responce time according to ISO 12238, deactivation time (ms)	Working pressure (bar)	Pressure range (bar) pilots 12-14	Temperature °C	Weight (gr.)
Filtered air, with or without lubrication	750	10	14	From vacuum to 10	3 - 7 bar	-5° / +50°	134

Solenoid - Solenoid - (5/3 Closed centres)

Ordering code	
2541.53.31.35.Ⓥ	
Ⓥ	VOLTAGE
	02 = 24 VDC PNP
	12 = 24 VDC NPN
	05 = 24 VAC

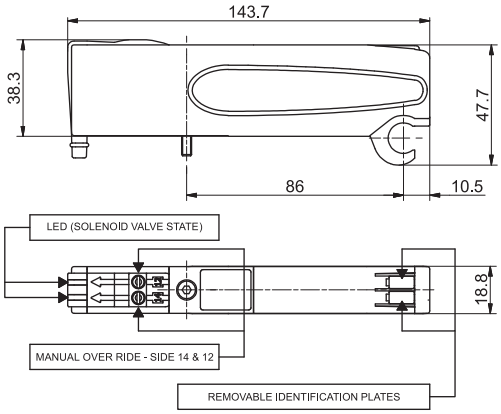

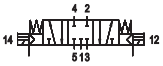

SHORT FUNCTION CODE "E"
"Shifting time of pneumatic directional control valves or moving parts, logic devices were measured in accordance to ISO 12238:2001, Pneumatic fluid power - Directional control valves - Measurement of shifting time."

Operational characteristic

Fluid	Flow rate at 6 bar with Δp=1 (Nl/min)	Responce time according to ISO 12238, activation time (ms)	Responce time according to ISO 12238, deactivation time (ms)	Working pressure (bar)	Pressure range (bar) pilots 12-14	Temperature °C	Weight (gr.)
Filtered air, with or without lubrication	600	15	20	From vacuum to 10	3 - 7 bar	-5° / +50°	132

Solenoid - Solenoid 2x3/2

Ordering code	
2541.62.Ⓕ.35.Ⓥ	
Ⓕ	FUNCTION
	44 = NC - NC (5/3 Open centres)
	55 = NO - NO (5/3 Pressured centres)
	45 = NC - NO (Normally Closed - Normally Open)
	54 = NO - NC (Normally Open - Normally Closed)
Ⓥ	VOLTAGE
	02 = 24 VDC PNP
	12 = 24 VDC NPN
	05 = 24 VAC

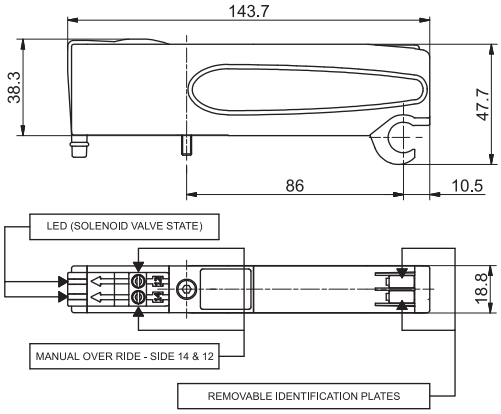

SHORT FUNCTION CODE:
NC-NC (5/3 Open centres) = "F"
NO-NC (5/3 Pressured centres) = "G"
NC-NO = "H"

"Shifting time of pneumatic directional control valves or moving parts, logic devices were measured in accordance to ISO 12238:2001, Pneumatic fluid power - Directional control valves - Measurement of shifting time."

Operational characteristic "Example: If inlet pressure is set at 5bar then pilot pressure must be at least Pp=2,5+(0.2*5)=3,5bar"

Fluid	Flow rate at 6 bar with Δp=1 (Nl/min)	Responce time according to ISO 12238, activation time (ms)	Responce time according to ISO 12238, deactivation time (ms)	Working pressure (bar)	Pressure range (bar) pilots 12-14	Temperature °C	Weight (gr.)
Filtered air, with or without lubrication	700	15	25	From vacuum to 10	≥2,5+(0,2xP.alim.)	-5° / +50°	122

Right Endplates

Ordering code	
2540.03.Ⓒ	
Ⓒ	CONNECTOR TYPE
	00 = Exhaust electrical connection closed
	25P = Connectors 25 poles

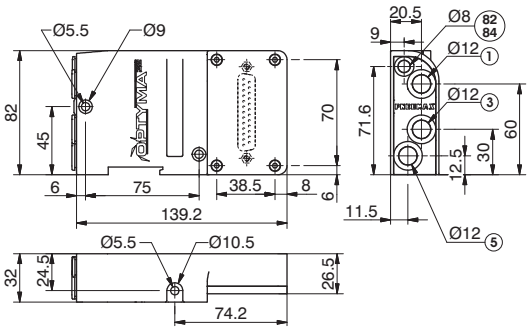

Weight gr. 274

CONDUIT 82/84= DO NOT PRESSURIZE, SOLENOID PILOTS EXHAUST

Operating Characteristics	Fluid	Pressure range (bar)	Temperature °C
	Filtered and lubricated air or not	From vacuum to 10	-5 - +50

Left Endplates - External feeding base

Ordering code	
2540.02.Ⓒ	
Ⓒ	CONNECTOR TYPE
	37P = Connector 37 poles PNP
	25P = Connector 25 poles PNP
	37N = Connector 37 poles NPN
	25N = Connector 25 poles NPN
	37A = Connector 37 poles AC
	25A = Connector 25 poles AC

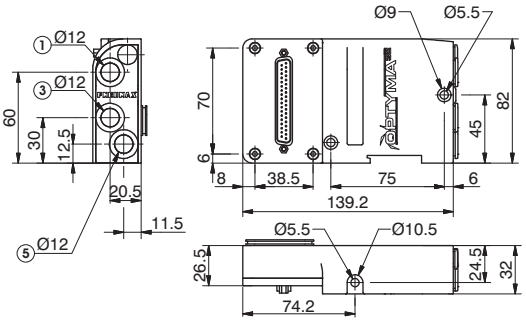

Weight gr. 300

12/14 divided from conduct 1

Operating Characteristics	Fluid	Pressure range (bar)	Pilot working pressure (bar)	Temperature °C
	Filtered and lubricated air or not	From vacuum to 10	3 - 7	-5 - +50

Left Endplates - Self-feeding Base

Ordering code	
2540.12.Ⓒ	
Ⓒ	CONNECTOR TYPE
	37P = Connector 37 poles PNP
	25P = Connector 25 poles PNP
	37N = Connector 37 poles NPN
	25N = Connector 25 poles NPN
	37A = Connector 37 poles AC
	25A = Connector 25 poles AC

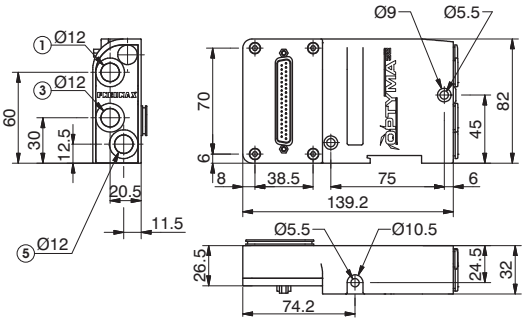

Weight gr. 300

12/14 connected with conduct 1

Operating Characteristics	Fluid	Pilot working pressure (bar)	Temperature °C
	Filtered and lubricated air or not	3 - 7	-5 - +50

Closing plate

Ordering code
2530.00

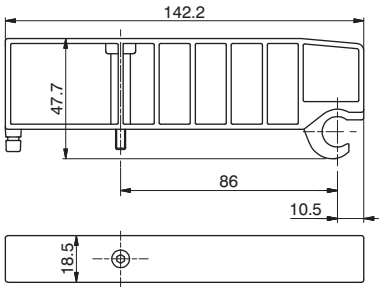

Weight gr. 53,5
SHORT FUNCTION CODE "T"

Operating Characteristics	Fluid	Pressure range (bar)	Temperature °C
	Filtered and lubricated air or not	From vacuum to 10	-5 - +50

Modular base

Ordering code	
254Ⓒ.01Ⓥ	
Ⓣ	CONNECTIONS
	1 = G1/8" Female
	4 = Cartridge Ø 4
	6 = Quick fitting tube Ø 6
	8 = Quick fitting tube Ø 8
Ⓥ	VERSION
	M= Monostable
	B= Bistable

Weight gr. 96,5

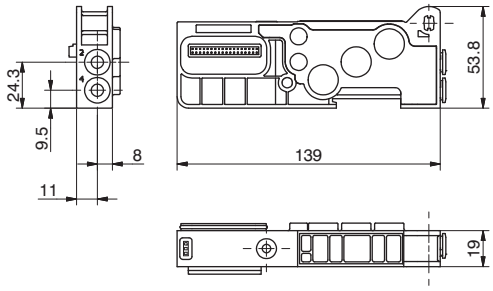

Operating Characteristics	Fluid	Pressure range (bar)	Temperature °C
	Filtered and lubricated air or not	From vacuum to 10	-5 - +50

Intermediate Inlet/Exhaust module

Ordering code
2540.10

Weight gr. 115
SHORT FUNCTION CODE "W"

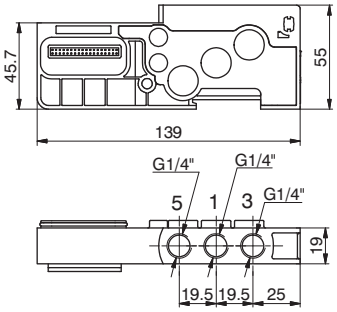

Operating Characteristics	Fluid	Pressure range (bar)	Temperature °C
	Filtered and lubricated air or not	From vacuum to 10	-5 - +50

Nut

Ordering code
2540.KD.00

Weight gr. 10
The Kit includes 4 pieces

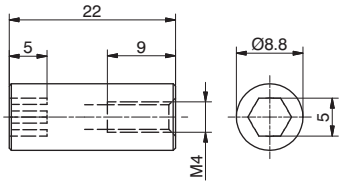

Extension (1 Position)

Ordering code
2540.KP.01

Weight gr. 3,5
The Kit includes 2 pieces

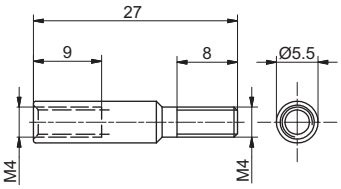

2

Set with single tie-rod (max. 32 Solenoid valves)

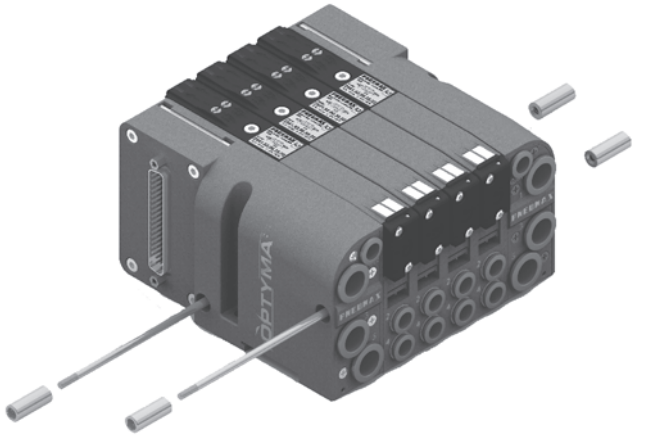

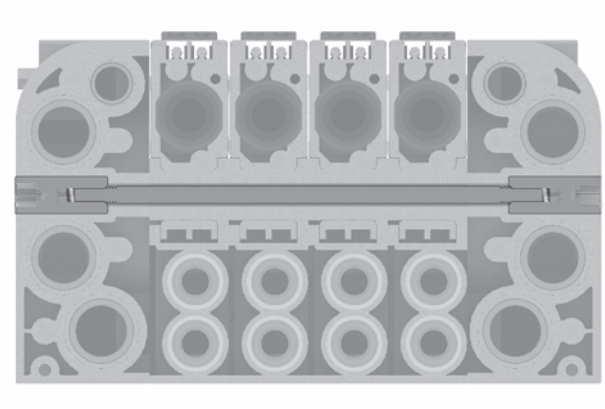

Set with tie-rod, more extension adding a valve

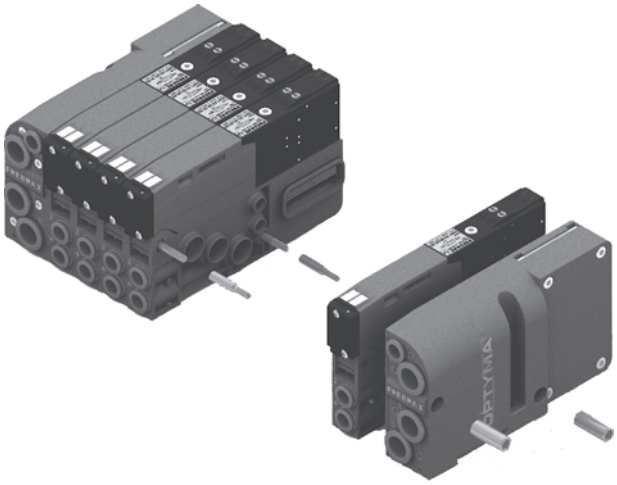

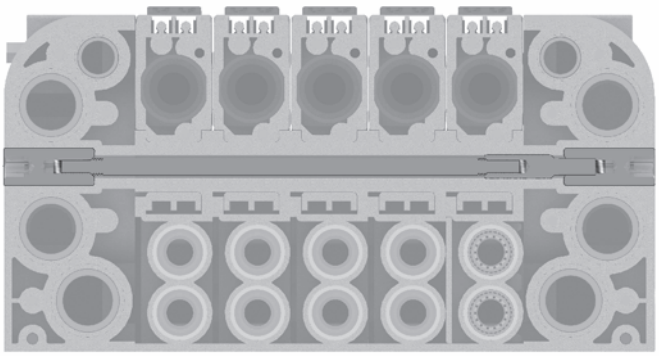

General :

Each Optyma-T manifold lets to manage 32 command signals for the valves.
Optyma-T serial nodes (CANopen®, DeviceNet, PROFIBUS DP, EtherCAT®, PROFINET IO RT/IRT, EtherNet/IP and Powerlink) have a single pin for the power supply of the solenoid valves. So if you want to interrupt the power supply of one valve it is necessary to interrupt all the valves. The additional power supply module lets to interrupt at the same time the first 2 available command signals for the valves after the module itself. The additional power supply module is particularly useful also when you use control signals that block the valves. This application is effective both with serial management and multi-pole connection of the manifolds.
This module is inserted directly into the Optyma-T solenoid valves manifold.

Ordering code

2540.10.2A

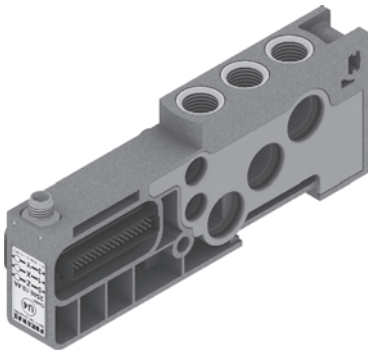

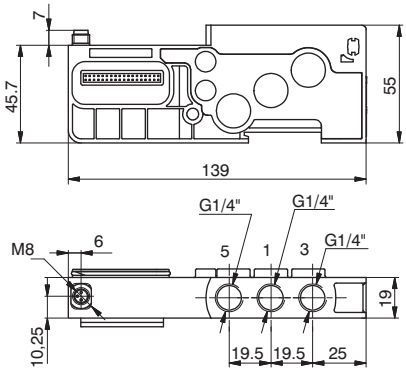

In particular this module is fitted with a M8 3 pins connector:
+24V, not connected, GND.

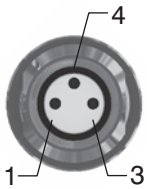

PIN	DESCRIPTION
1	+24 VDC
4	NOT CONNECTED
3	GND

WORKING PRINCIPLE / SIMPLIFIED FUNCTIONAL DIAGRAM

This module uses an external power supply (+24VDC) to manage the solenoid valves.

The output signal from serial node / multi-pole connection is used as command signal: when it is high the +24VDC will be present at the module output.

If you want to cut off the power supply to a group of 2 valves it is sufficient to take away the +24VDC provided to the module by the M8 connector.

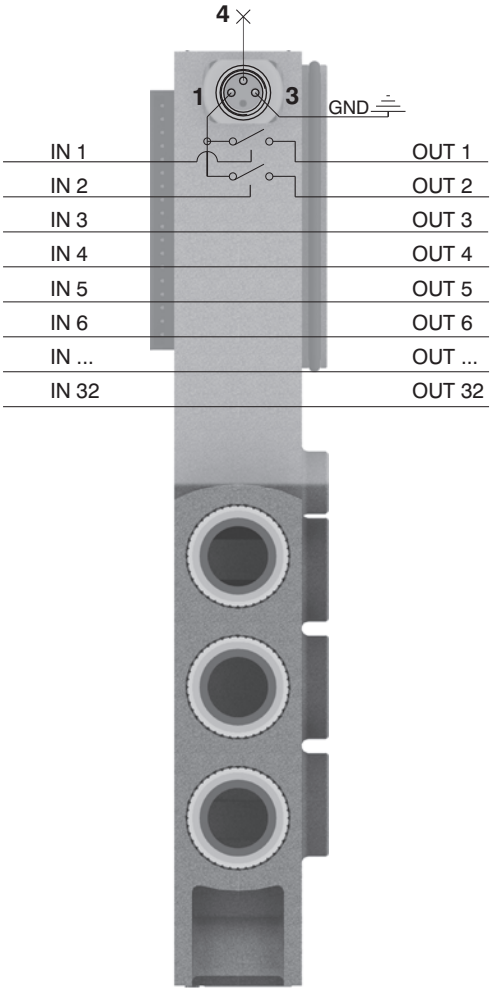

Please note: It is possible to use more modules to interrupt all the command signals, simply by inserting them before the signals to interrupt and after the signals already interrupted.

2

Usage examples:

EXAMPLE 1:
Manifold of 12 monostable valves on which you want to interrupt signals 7-8

Assembly:
- 6 monostable valves (not interruptible because before the module),
- 1 additional power supply module,
- 6 monostable valves. Please note: the first 2 monostable of these are interruptible by the module, while the following 4 will work correctly managed directly by the corresponding command signals.

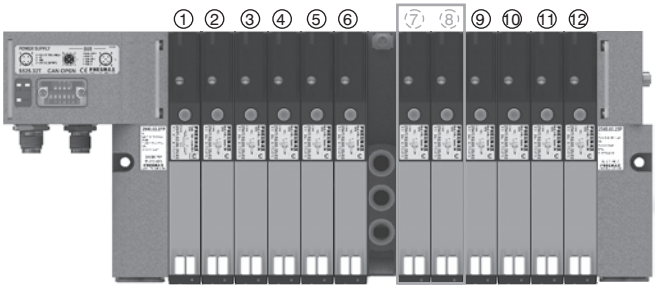

EXAMPLE 2:
Manifold of 12 monostable valves on which you want to interrupt signal 9

Assembly:
- 8 monostable valves (not interruptible because before the module),
- 1 additional power supply module,
- 1 monostable valve (interruptible),
- 1 closing plate mounted on a monostable base,
- 3 monostable valves (work correctly managed directly by the corresponding command signals).

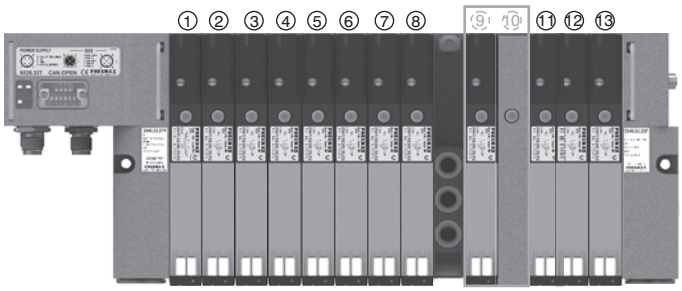

Please note: Each additional power supply module interrupts always 2 electrical signals.
If you need to interrupt less than 2 signals you can:
- assemble the valves to interrupt in the last positions of the manifold, so you don't need to worry about the interrupted exceeding signals;
- use a bistable base and mount a monostable valve (for each signal less than the 2 standard);
- use a monostable base and mount a closing plate (for each signal less than the 2 standard).

EXAMPLE 3:
Manifold of 7 monostable e 3 bistable valves on which you want to interrupt signals 2-3 and 8-9.

Assembly:
- 1 monostable valve (not interruptible because before the module),
- 1 additional power supply module,
- 6 monostable valves.
Please note: the first 2 monostable of these are interruptible by the module, while the following 4 will work correctly managed directly by the corresponding command signals.
- 1 additional power supply module,
- 3 bistable valves.
Please note: the first bistable of these valves is interruptible by the module, while the following 2 will work correctly managed directly by the corresponding command signals.

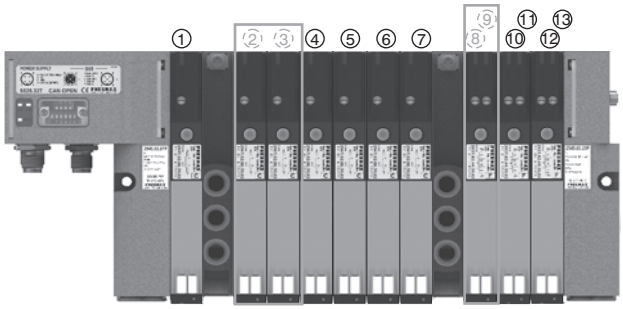

General :

Each Optyma-T manifold lets to manage 32 command signals for the valves.
Optyma-T serial nodes (CANopen®, DeviceNet, PROFIBUS DP, EtherCAT®, PROFINET IO RT/IRT, EtherNet/IP and Powerlink) have a single pin for the power supply of the solenoid valves. So if you want to interrupt the power supply of one valve it is necessary to interrupt all the valves.
The additional power supply module lets to interrupt at the same time the first 4 available command signals for the valves after the module itself. The additional power supply module is particularly useful also when you use control signals that block the valves. This application is effective both with serial management and multi-pole connection of the manifolds.
This module is inserted directly into the Optyma-T solenoid valves manifold.

Ordering code

2540.10.4A

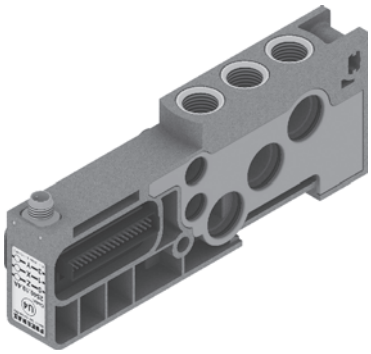

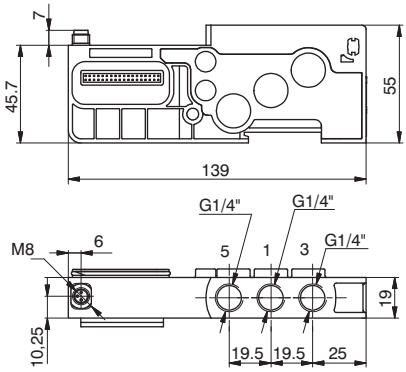

In particular this module is fitted with a M8 3 pins connector:
+24V, not connected, GND.

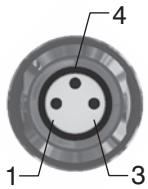

PIN	DESCRIPTION
1	+24 VDC
4	NOT CONNECTED
3	GND

WORKING PRINCIPLE / SIMPLIFIED FUNCTIONAL DIAGRAM

This module uses an external power supply (+24VDC) to manage the solenoid valves.

The output signal from serial node / multi-pole connection is used as command signal: when it is high the +24VDC will be present at the module output.

If you want to cut off the power supply to a group of 4 valves it is sufficient to take away the +24VDC provided to the module by the M8 connector.

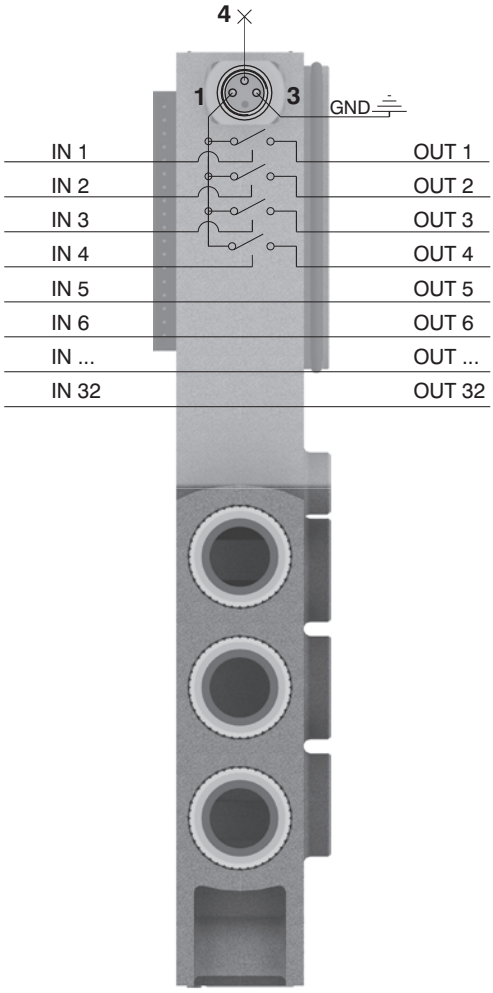

Please note: It is possible to use more modules to interrupt all the command signals, simply by inserting them before the signals to interrupt and after the signals already interrupted.

2

Usage examples:

EXAMPLE 1:
Manifold of 12 monostable valves on which you want to interrupt signals 7-8-9-10

Assembly:
- 6 monostable valves (not interruptible because before the module),
- 1 additional power supply module,
- 6 monostable valves. Please note: the first 4 monostable of these are interruptible by the module, while the following 2 will work correctly managed directly by the corresponding command signals.

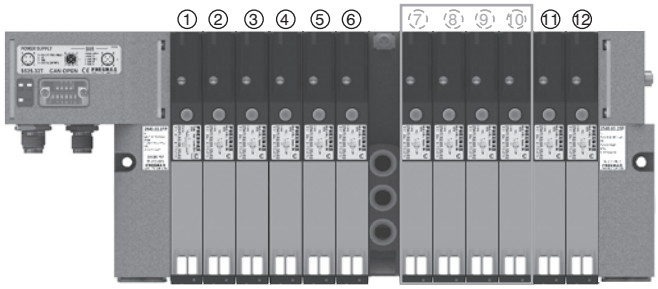

EXAMPLE 2:
Manifold of 12 monostable valves on which you want to interrupt signals 7-8-9

Assembly:
- 6 monostable valves (not interruptible because before the module),
- 1 additional power supply module,
- 3 monostable valves (interruptible),
- 1 closing plate mounted on a monostable base,
- 3 monostable valves (work correctly managed directly by the corresponding command signals).

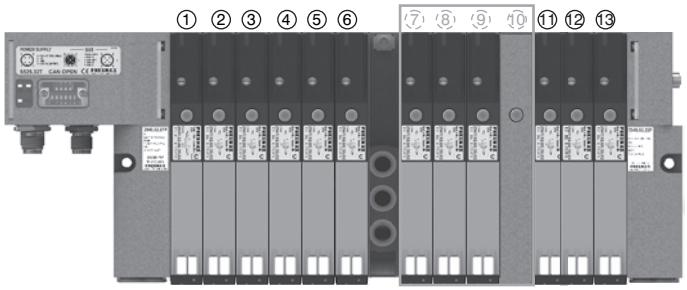

Please note: Each additional power supply module interrupts always 4 electrical signals.
If you need to interrupt less than 4 signals you can:
- assemble the valves to interrupt in the last positions of the manifold, so you don't need to worry about the interrupted exceeding signals;
- use a bistable base and mount a monostable valve (for each signal less than the 4 standard);
- use a monostable base and mount a closing plate (for each signal less than the 4 standard).

EXAMPLE 3:
Manifold of 7 monostable e 3 bistable valves on which you want to interrupt signals 2-3-4-5 and 8-9-10-11.

Assembly:
- 1 monostable valve (not interruptible because before the module),
- 1 additional power supply module,
- 6 monostable valves.
Please note: the first 4 monostable of these are interruptible by the module, while the following 2 will work correctly managed directly by the corresponding command signals.
- 1 additional power supply module,
- 3 bistable valves.
Please note: the first 2 bistable of these valves are interruptible by the module, while the following will work correctly managed directly by the corresponding command signals.

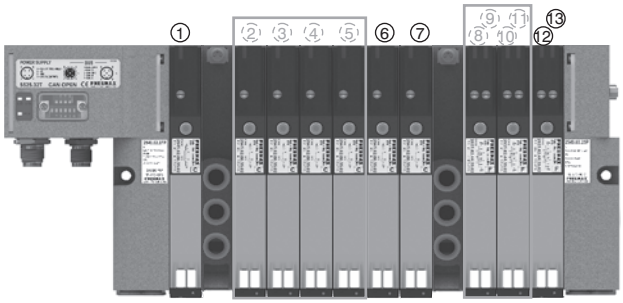

Tie-rod M4

Ordering code
2540.KT.P

	N. POSITIONS
P	01=Nr. 1 Position
	02=Nr. 2 Positions
	03=Nr. 3 Positions
	04=Nr. 4 Positions
	05=Nr. 5 Positions
	06=Nr. 6 Positions
	07=Nr. 7 Positions
	08=Nr. 8 Positions
	09=Nr. 9 Positions
	10=Nr. 10 Positions
	11=Nr. 11 Positions
	12=Nr. 12 Positions
	13=Nr. 13 Positions
	14=Nr. 14 Positions
	...
	32=Nr. 32 Positions

CODE LIST

CODE	"L" DIMENSION
2540.KT.01	55
2540.KT.02	74
2540.KT.03	93
2540.KT.04	112
2540.KT.05	131
2540.KT.06	150
2540.KT.07	169
2540.KT.08	188
2540.KT.09	207
2540.KT.10	226
2540.KT.11	245
2540.KT.12	264
2540.KT.13	283
2540.KT.14	302
2540.KT.	...
2540.KT.32	644

Accessories table for manifolds

Set of N° positions	Ordering code
1	2540.KD.00 + 2540.KT.01
2	2540.KD.00 + 2540.KT.02
3	2540.KD.00 + 2540.KT.03
4	2540.KD.00 + 2540.KT.04
5	2540.KD.00 + 2540.KT.05
6	2540.KD.00 + 2540.KT.06
7	2540.KD.00 + 2540.KT.07
8	2540.KD.00 + 2540.KT.08
9	2540.KD.00 + 2540.KT.09
10	2540.KD.00 + 2540.KT.10
11	2540.KD.00 + 2540.KT.11
12	2540.KD.00 + 2540.KT.12
13	2540.KD.00 + 2540.KT.13
14	2540.KD.00 + 2540.KT.14
15	2540.KD.00 + 2540.KT.15
16	2540.KD.00 + 2540.KT....
32	2540.KD.00 + 2540.KT.32

2540.KD.00

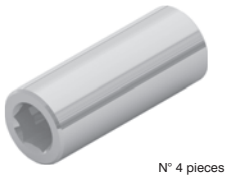

N° 4 pieces

2540.KT.XX

N° 2 pieces

Polyethylene Silencer Series SPL-R

Ordering code
SPLR.F

	TUBE DIAMETER
F	8=8 mm
	12=12 mm

Diaphragm plug

Ordering code
2530.17
Weight gr. 6,5

Cable complete with connector, 25 Poles IP65

Ordering code
2300.25.L.C

	CABLE LENGHT
L	03 = 3 meters
	05 = 5 meters
	10 = 10 meters
	CONNECTORS
P	10 = In line
	90 = 90° Angle

Cable complete with connector, 37 Poles IP65

Ordering code
2400.37.L.C

	CABLE LENGHT
L	03 = 3 meters
	05 = 5 meters
	10 = 10 meters
	CONNECTORS
P	10 = In line
	90 = 90° Angle

Cable complete with connector, 25 Poles IP65

Ordering code
2400.25.L.25

	CABLE LENGHT
L	03 = 3 meters
	05 = 5 meters
	10 = 10 meters

The electrical connection is achieved by a 37 pin connector and can manage up to 32 solenoid pilots.
It is also possible use a 25 sub-D pin connector and, in this case, it is possible to manage a maximum of 22 outputs.
The management and distribution of the electrical signals between each valve is obtained thanks to an electrical connector which receives the signals from the previous module, uses one, two or none depending on the type, and carries forward to the next module the remaining.
Bistable valves, 5/3 and 2x3/2 valves which have two solenoid pilots built in, use two signals; the first is directed to the pilot side 14 the second to the pilot side 12. Modular bases can be fitted with two type of electrical connector: the monostable version uses only one signal (connected to the pilot side 14) and carries forward the remaining, the bistable version which always uses two signals.
This solution allows the modification of the manifold (replacement of monostable valves without bistable for example) without having to reset the PLC output layout.
On other hand this solution limits the maximum number of valves to 16 when it is used a 37 pin connector or 11 when it is used a 25 pin connector.
Intermediate supply/exhaust module uses an electrical connector directly forwarding signals to the next one without any kind of modification.
This allows the use of intermediate modules in any position of the manifold.
All the electrical signals that have not been used on the manifold can be used placing at the end of the manifold the end plate complete with the 25 sub-D female connector.
The number of available signals depends of the connector used to the type of the left end plate and by the total signals used along the manifold:

37 pin connector nr of output = 32 – (total of used signals)
25 pin connector nr of output = 22 – (total of used signals)

Following we show some examples of possible combination and the relative pin assignment.

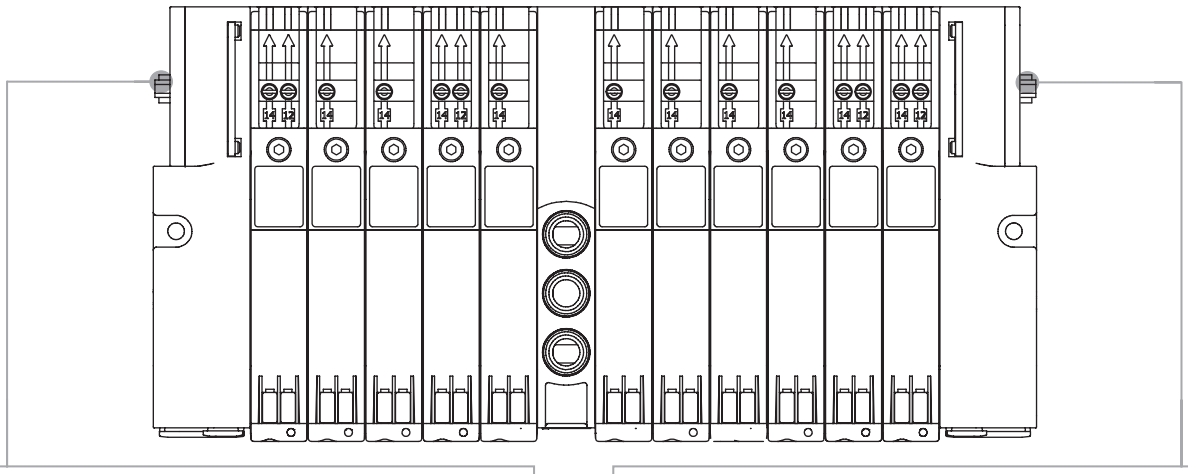

IN-LET ELECTRIC CONNECTIONS

SUB-D 37 POLE
MALE CONNECTOR

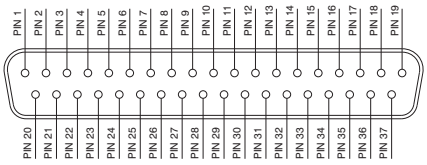

1 - 32 = SOLENOID VALVES SIGNAL
33 - 35 = GND
36 - 37 = THROUGH LINE

SUB-D 25 POLE
MALE CONNECTOR

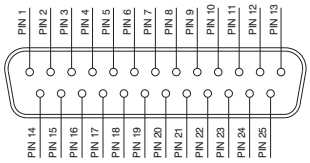

1 - 22 = SOLENOID VALVES SIGNAL
23 - 24 = GND
25 = THROUGH LINE

OUTLET ELECTRIC CONNECTIONS (IF PRESENT)

SUB-D 25 POLE
FEMALE CONNECTOR

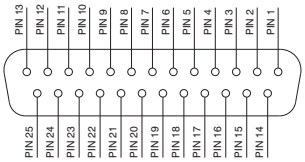

1 - 22 = SOLENOID VALVES SIGNAL
23 - 24 = GND
25 = THROUGH

37 PIN Connector correspondence for valves assembled on mixed bases

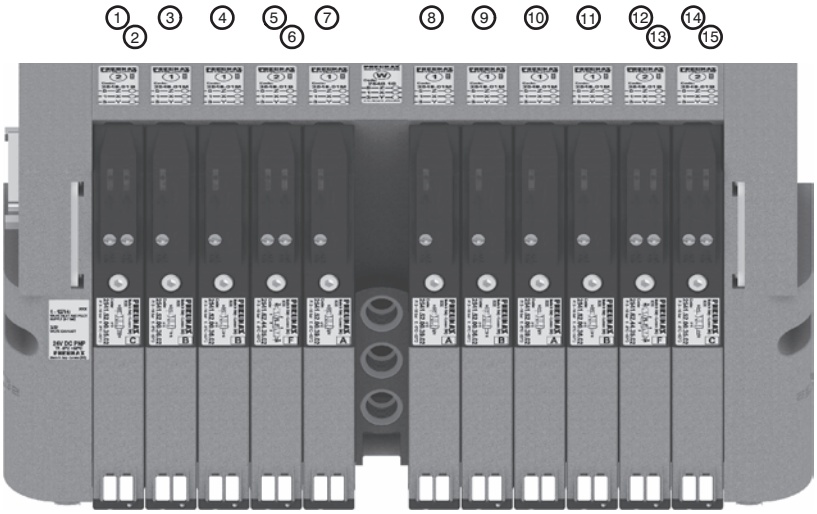

PIN 1 = PILOT 14 EV POS.1
PIN 2 = PILOT 12 EV POS.1
PIN 3 = PILOT 14 EV POS.2
PIN 4 = PILOT 14 EV POS.3
PIN 5 = PILOT 14 EV POS.4
PIN 6 = PILOT 12 EV POS.4
PIN 7 = PILOT 14 EV POS.5
PIN 8 = PILOT 14 EV POS.7
PIN 9 = PILOT 14 EV POS.8
PIN 10 = PILOT 14 EV POS.9
PIN 11 = PILOT 14 EV POS.10
PIN 12 = PILOT 14 EV POS.11
PIN 13 = PILOT 12 EV POS.11
PIN 14 = PILOT 14 EV POS.12
PIN 15 = PILOT 12 EV POS.12

POS.	1	2	3	4	5	6	7	8	9	10	11	12

37 PIN Connector correspondence for manifold mounted on bases for bistable valves

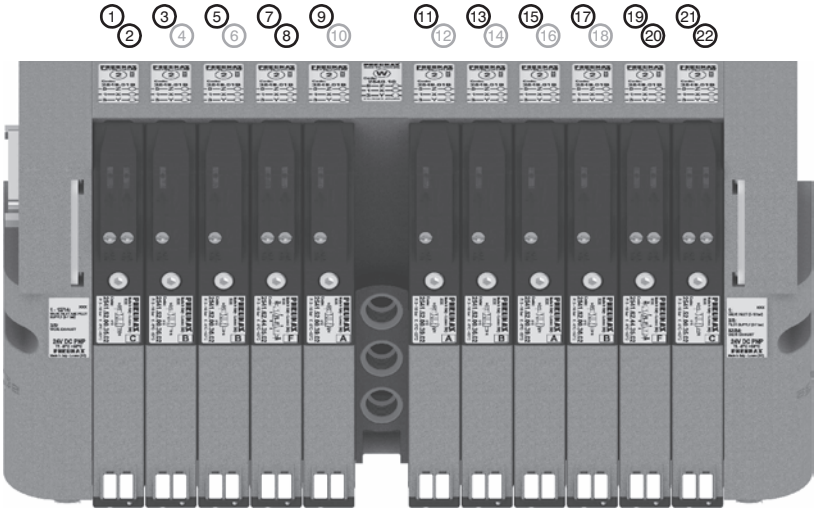

PIN 1 = PILOT 14 EV POS.1
PIN 2 = PILOT 12 EV POS.1
PIN 3 = PILOT 14 EV POS.2
PIN 4 = NOT CONNECTED
PIN 5 = PILOT 14 EV POS.3
PIN 6 = NOT CONNECTED
PIN 7 = PILOT 14 EV POS.4
PIN 8 = PILOT 12 EV POS.4
PIN 9 = PILOT 14 EV POS.5
PIN 10 = NOT CONNECTED
PIN 11 = PILOT 14 EV POS.7
PIN 12 = NOT CONNECTED
PIN 13 = PILOT 14 EV POS.8
PIN 14 = NOT CONNECTED
PIN 15 = PILOT 14 EV POS.9
PIN 16 = NOT CONNECTED
PIN 17 = PILOT 14 EV POS.10
PIN 18 = NOT CONNECTED
PIN 19 = PILOT 14 EV POS.11
PIN 20 = PILOT 12 EV POS.11
PIN 21 = PILOT 14 EV POS.12
PIN 22 = PILOT 12 EV POS.12

POS.	1	2	3	4	5	6	7	8	9	10	11	12

37 PIN Connector correspondence for manifold for 32 position manifold with monostable valves on base

37P

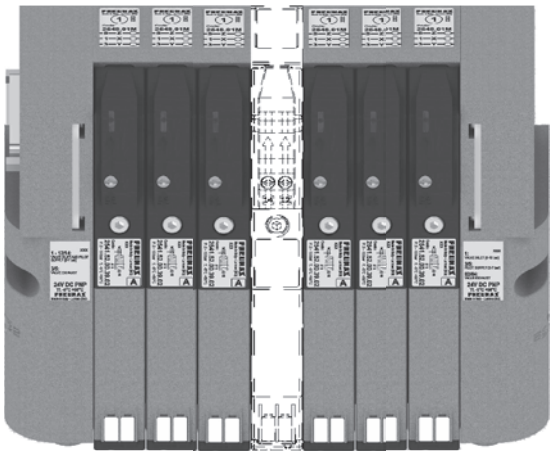

POS.	1	2	3	...	30	31	32

25P

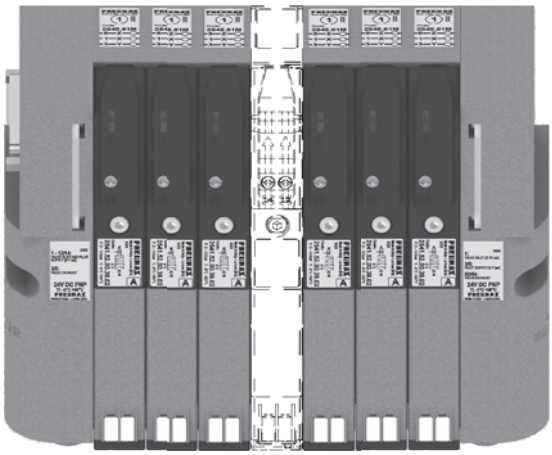

POS.	1	2	3	...	20	21	22

2

General :

Using the 2540.03.25P output terminal it is possible to make any electrical signals not used by valves available on a 25 sub-D female connector at the right end of the manifold.
It is possible to then join a multi-core cable to link to the next manifold, or connect directly to one or two I/O modules.
The I/O modules can accept input or output signals, depending upon what is connected.

Ordering code

2540.08T

Please note: If the manifold is connected by a multi-core connection, each connection can be used as either an input or an output, while if the manifold is connected to a serial node the connections can only be used as an output.

It is possible to connect the manifold to up to two I/O modules.

Each I/O module includes 8 diagnostic LEDs which indicate the presence of an Input / Output signal for each connector.

Please note: For an LED to function, a signal of at least +15VDC must be present on pin 4 of the connector. If this signal is lower, the LED will not light, this does not compromise the normal Input / Output function of the unit.

Overall dimensions and I/O layout :

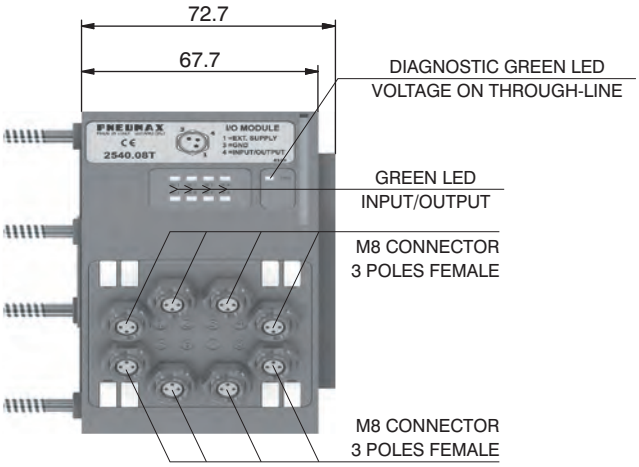

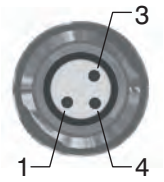

PIN	DESCRIPTION
1	+24 VDC
4	INPUT/OUTPUT
3	GND

Input features:

Each connection can accept either two wire (switches, magnetic switches, pressure switches, etc.) or three wire connections (photocells, electronic end of stroke sensors, etc.) If +24VDC is required on at Pin 1 of each connector, it is possible to provide this via the through-line pin of the multi-pole connector.
I.E :
Pin 25 of the 25 pin multi-pole connector (code 2540.02.25P or 2540.12.25P)
Pin 36-37 of the 37 pin multi-pole connector (code 2540.02.37P or 2540.12.37P)

Output features:

Attention: The output connections are not protected against short-circuit. Please pay attention when wiring (avoid Pin 4 being connected to Pin 3 or Pin 1).

	Model	2540.08T
	Case	Reinforced technopolymer
General characteristics	I/O Connector	M8 connector 3 poles female (IEC 60947-5-2)
	PIN 1 voltage (connector used as Input)	By the user
	PIN 4 voltage diagnosis	Green Led
	Node consumption (Outlets excluded)	7mA per each LED with 24 VDC signal
	Outlets voltage	+23,3 VDC (serial) /by the user (multipolar)
	Input voltage	Depend by the using
	Maximum outlet current	100 mA (serial) / 400 mA (multipolar)
	Maximum Input/Output	8 per module
	Multiconnector max. Current	100 mA
	Connections to manifold	Direct connection to 25 poles connector
	Maximum n. of moduls	2
	Protection degree	IP65 when assembled
	Ambient temperature	from -0° to +50° C

CORRESPONDENCE BETWEEN MULTI-POLE SIGNAL AND CONNECTOR

SUB-D TYPE 37 POLE MALE CONNECTOR

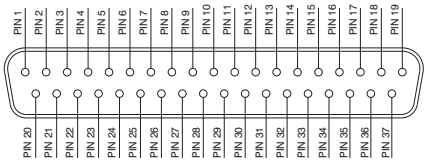

1 - 32 = SIGNALS
33 - 35 = GND
36 - 37 = THROUGH LINE

SUB-D TYPE 25 POLE MALE CONNECTOR

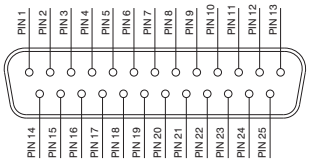

1 - 22 = SIGNALS
23 - 24 = GND
25 = THROUGH LINE

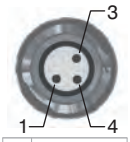

PIN	DESCRIPTION
1	THROUGH LINE
4	SIGNAL
3	GND

Connection modes:

The I/O module changes it is operation depending on the way the manifold is controlled. There are two possible modes:

A) Control via multi-pole connection
B) Control via fieldbus

In order to use the I/O module, the correct right hand endplate with 25 pole female outlet connector must be used.
(Code 2540.03.25P).

A) Control via multi-pole :

M8 connector used as Input:

Attention: Voltage applied to each connector is passed to multi-pole connector pin.

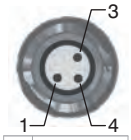

PIN	DESCRIPTION
1	THROUGH LINE
4	SIGNAL
3	GND

M8 connector used as Output:

Output voltage will the same as is applied at the multi-pole connector pin.
The maximum output current depends upon the power unit used, but we recommend no more than 250mA.

Attention: Since every cable has a degree of resistance, there will always be a voltage drop depending on the cable's length, sectional area and the current.

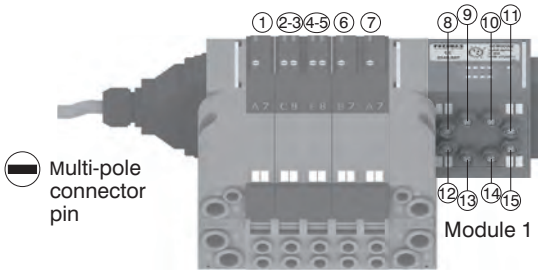

Attention: Only one more I/O module can be added.

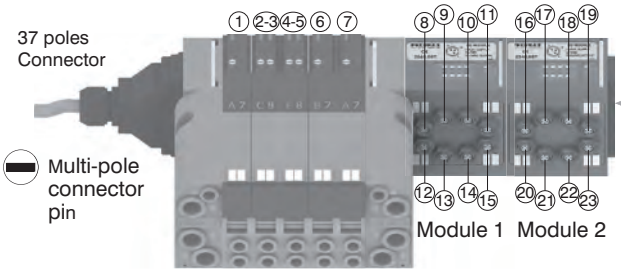

Attention: No more additions are possible

Attention : Optyma 32-T solenoid valve manifolds permit up to 22 electrical signals that are not used by manifolds to be made available: these signals can be managed by another manifold and / or by I/O modules.
The I/O module will manage these unused signals. Connections that are not managing useful signals will remain unconnected.

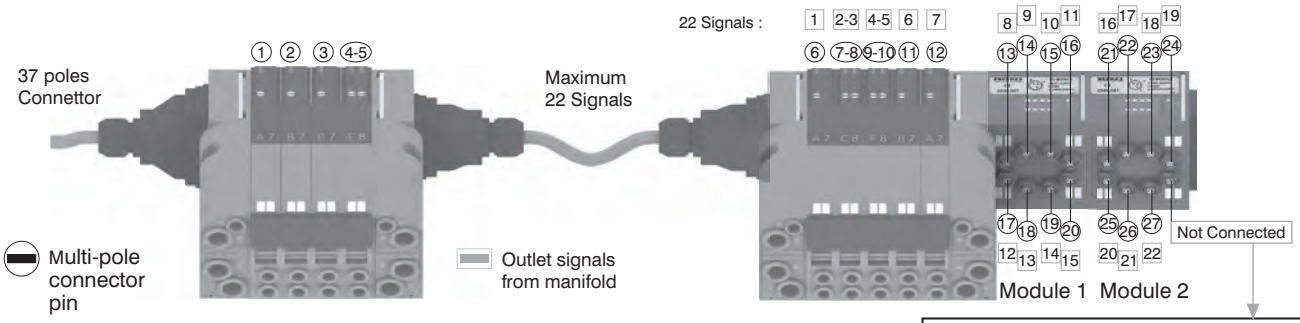

Please note: this example considers a 37 pin multi-pole connector.
The same configuration managed by a 25 pin multi-pole connector will stop at number 22 of multi-pole connector and at number 17 of the manifold. 22 17

Attention:
Signal Not connected
GND Connected
Through line Connected

2

Please note: Optyma 32-T solenoid valve manifolds manage up to 32 signals. If the manifold uses more than 24 signals the I/O module will manage only the remainder. Connections that are not managing useful signals will remain unconnected.

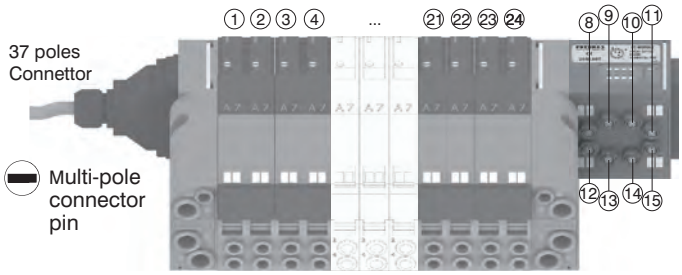

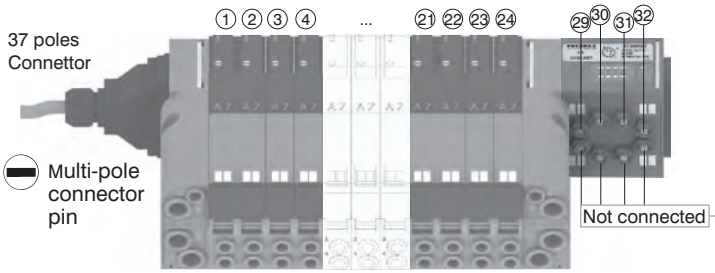

Attention:
Signal Not connected
GND Connected
Through line Connected

B) Control via fieldbus:

With this kind of control the I/O module can only be used as an output. Pin 1 of each connector is not connected. The output voltage will be 0.7V lower than that applied to Pin 4 of the connector.
The maximum output current for each output is 100mA. The correspondence between control byte and each single output depends on how many electrical signals are used by the manifold and by the relative position of the I/O module.

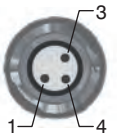

PIN	DESCRIPTION
1	NOT CONNECTED
4	SIGNAL
3	GND

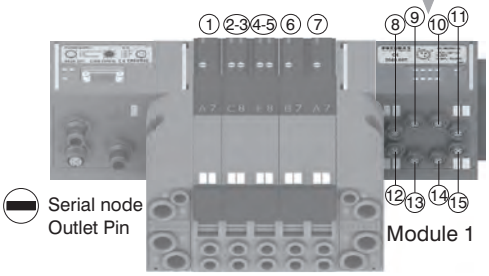

Attention:
Output only

Attention:
Only one more
I/O module
can be added.

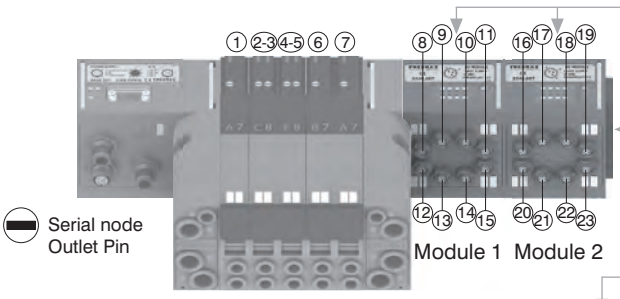

Attention:
Output only

Attention:
No more additions
are possible

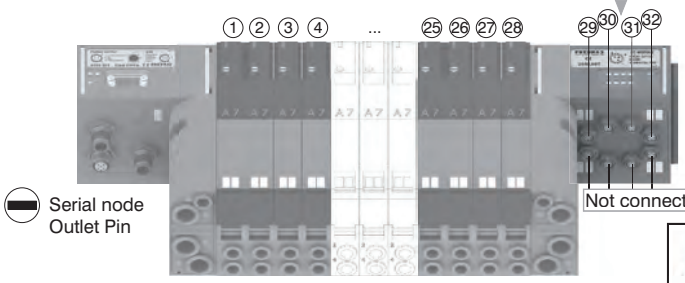

Attention:
Output only

Attention:
Signal Not connected
GND Connected

Please note: I/O modules don't allow to connect any additional valves manifold after them.

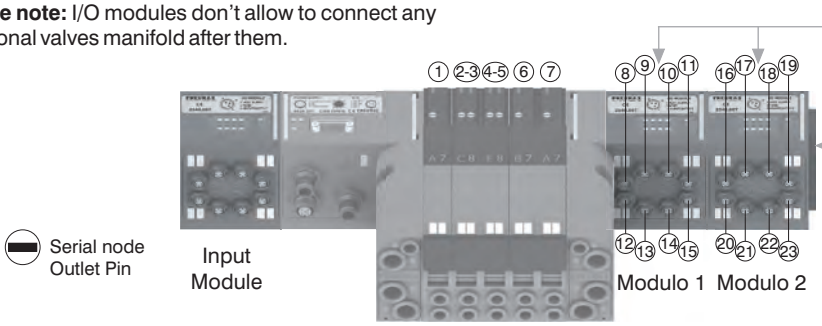

Attention:
Output only

Attention:
No more additions
are possible

From the top

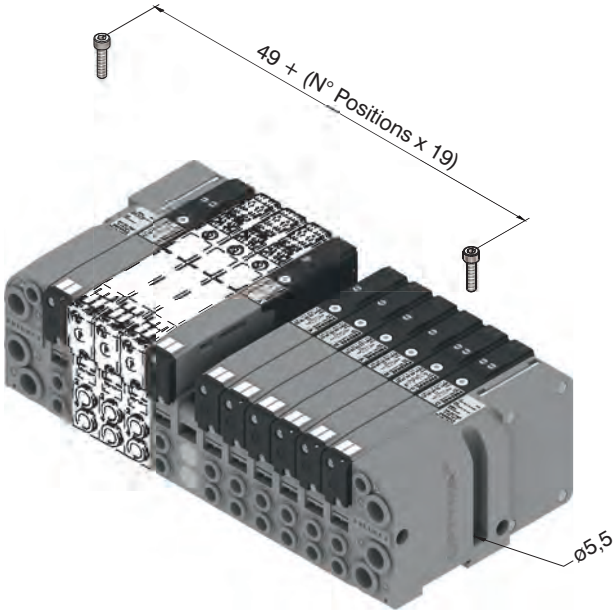

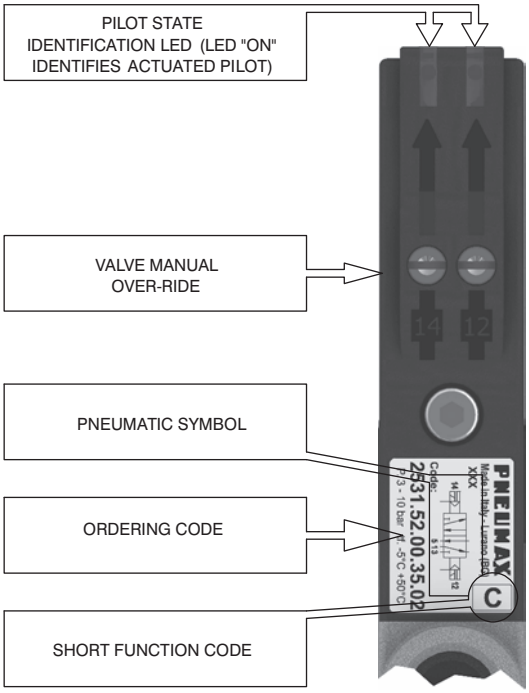

DIN rail fixing

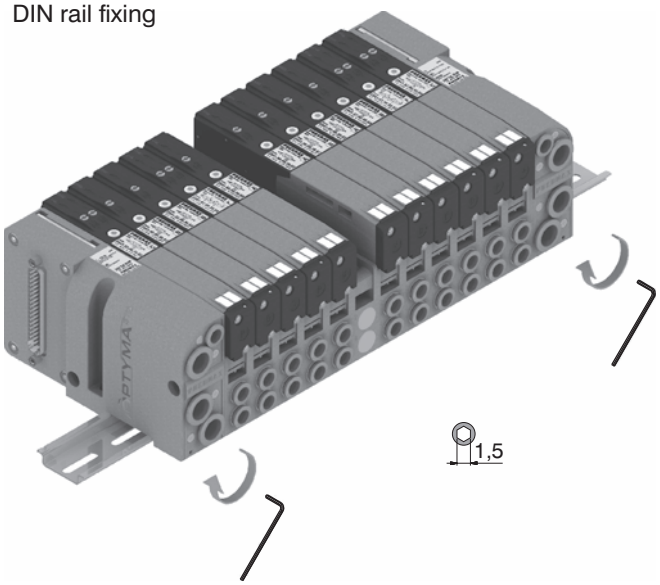

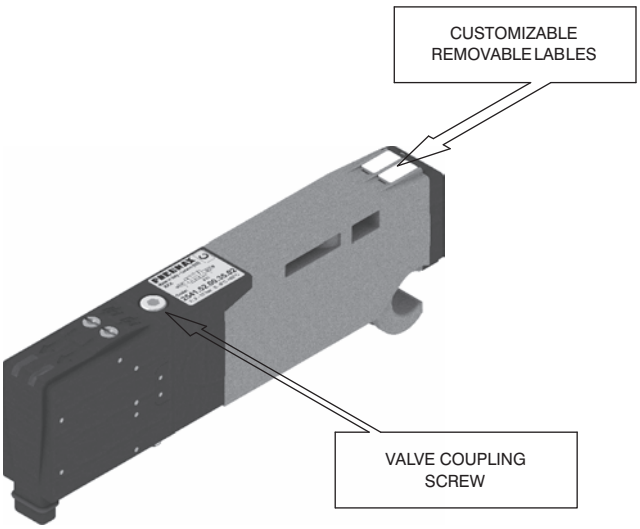

Maximum possible size according to valves seats

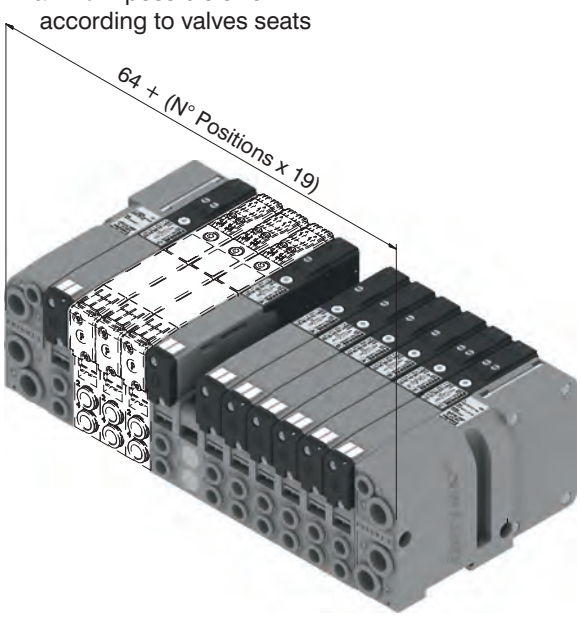

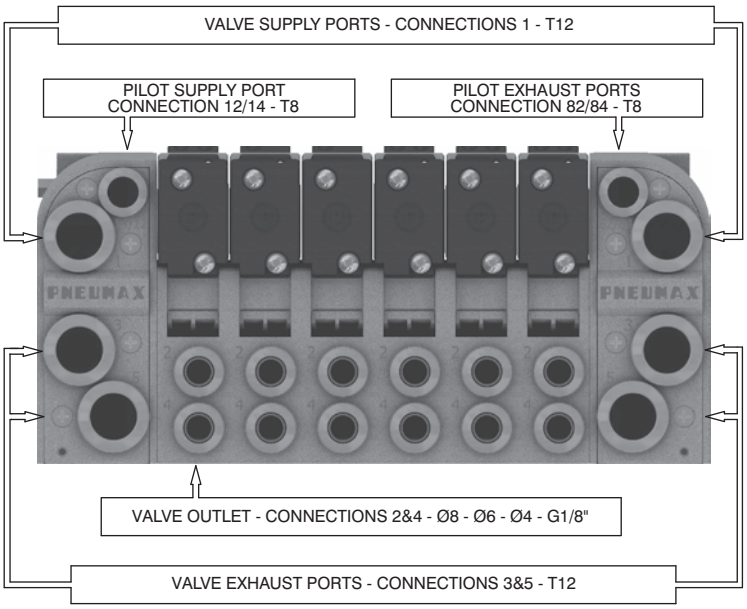

Manual override actuation

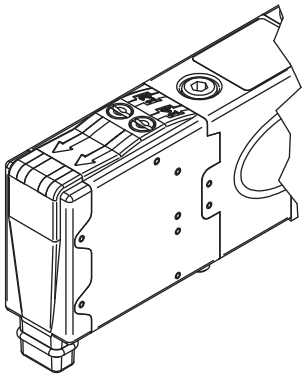

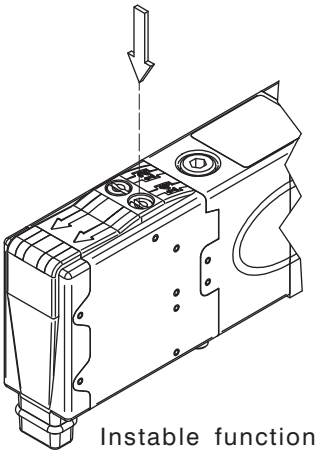

Instable function: push to actuate (when released it moves back to the original position).

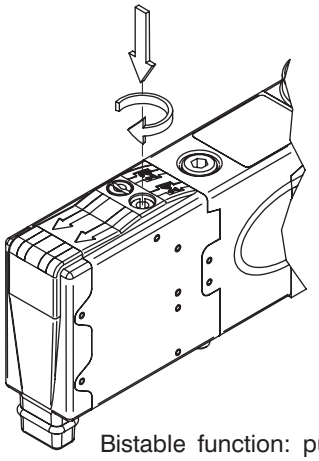

Bistable function: push and turn to get the bistable function

NOTE : It is strongly suggested to replace the original position after using

Valve Installation

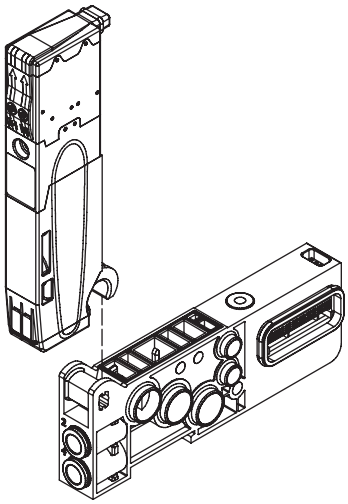

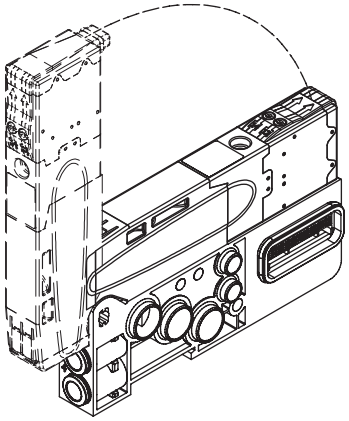

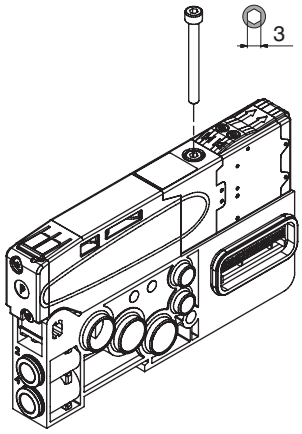

NOTE: Torque moment 1 Nm

Manifold assembly

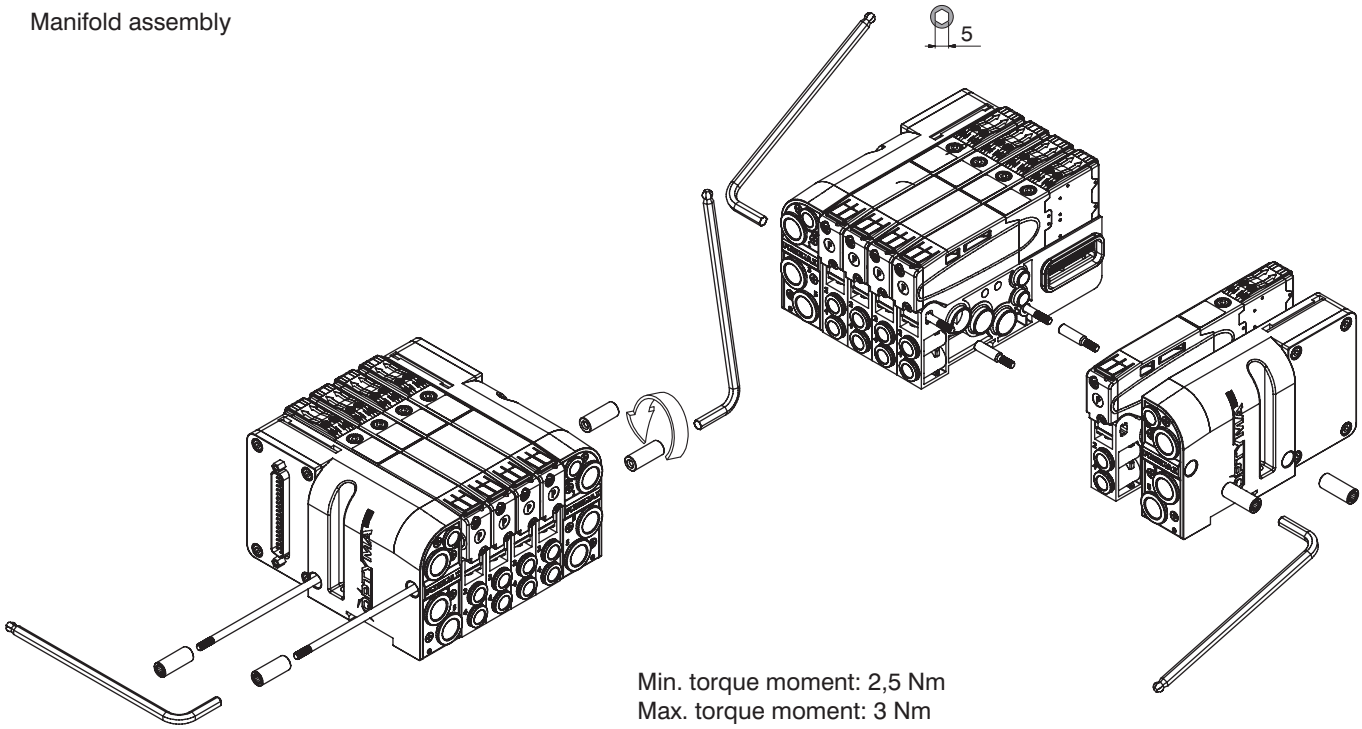

Min. torque moment: 2,5 Nm
Max. torque moment: 3 Nm

Manifold Layout configuration

MULTIPOINT CONNECTION

MP = PNP 24 V DC
MN = NPN 24 V DC
MA = 24 V AC

LEFT ENDPLATE

A2 = 25 poles - Self feeding
A3 = 37 poles - Self feeding
E2 = 25 poles - External feeding
E3 = 37 poles - External feeding

RIGHT ENDPLATE

U0 = Closed
U2 = 25 Poles
U3 = 37 Poles

I/O MODULE

M8
(Requires 25 poles right endplate)

MODUL CONFIGURATION

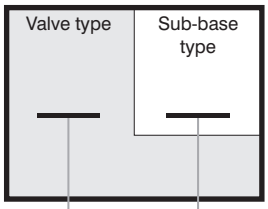

ACCESSORIES CONFIGURATION

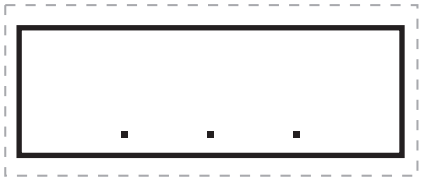

SHORT CODE FUNCTION / CONNECTION :

A1= 5/2 Sol.-Spring + BASE 1 - CARTR. G1/8" GAS
A2= 5/2 Sol.-Spring + BASE 2 - CARTR. G1/8" GAS
A3= 5/2 Sol.-Spring + BASE 1 - CARTR. Ø4
A4= 5/2 Sol.-Spring + BASE 2 - CARTR. Ø4
A5= 5/2 Sol.-Spring + BASE 1 - CARTR. Ø6
A6= 5/2 Sol.-Spring + BASE 2 - CARTR. Ø6
A7= 5/2 Sol.-Spring + BASE 1 - CARTR. Ø8
A8= 5/2 Sol.-Spring + BASE 2 - CARTR. Ø8
B1= 5/2 Sol.-Diff. + BASE 1 - CARTR. G1/8" GAS
B2= 5/2 Sol.-Diff. + BASE 2 - CARTR. G1/8" GAS
B3= 5/2 Sol.-Diff. + BASE 1 - CARTR. Ø4
B4= 5/2 Sol.-Diff. + BASE 2 - CARTR. Ø4
B5= 5/2 Sol.-Diff. + BASE 1 - CARTR. Ø6
B6= 5/2 Sol.-Diff. + BASE 2 - CARTR. Ø6
B7= 5/2 Sol.-Diff. + BASE 1 - CARTR. Ø8
B8= 5/2 Sol.-Diff. + BASE 2 - CARTR. Ø8
C2= 5/2 Sol.-Sol. + BASE 2 - CARTR. G1/8" GAS
C4= 5/2 Sol.-Sol. + BASE 2 - CARTR. Ø4
C6= 5/2 Sol.-Sol. + BASE 2 - CARTR. Ø6
C8= 5/2 Sol.-Sol. + BASE 2 - CARTR. Ø8
E2= 5/3 CC Sol.-Sol. + BASE 2 - CARTR. G1/8" GAS
E4= 5/3 CC Sol.-Sol. + BASE 2 - CARTR. Ø4
E6= 5/3 CC Sol.-Sol. + BASE 2 - CARTR. Ø6
E8= 5/3 CC Sol.-Sol. + BASE 2 - CARTR. Ø8
F2= 2x3/2 NC-NC (= 5/3 OC) Sol.-Sol. + BASE 2 - CARTR. G1/8" GAS
F4= 2x3/2 NC-NC (= 5/3 OC) Sol.-Sol. + BASE 2 - CARTR. Ø4
F6= 2x3/2 NC-NC (= 5/3 OC) Sol.-Sol. + BASE 2 - CARTR. Ø6
F8= 2x3/2 NC-NC (= 5/3 OC) Sol.-Sol. + BASE 2 - CARTR. Ø8
G2= 2x3/2 NO-NO (= 5/3 PC) Sol.-Sol. + BASE 2 - CARTR. G1/8" GAS
G4= 2x3/2 NO-NO (= 5/3 PC) Sol.-Sol. + BASE 2 - CARTR. Ø4
G6= 2x3/2 NO-NO (= 5/3 PC) Sol.-Sol. + BASE 2 - CARTR. Ø6
G8= 2x3/2 NO-NO (= 5/3 PC) Sol.-Sol. + BASE 2 - CARTR. Ø8
H2= 2x3/2 NC-NO Sol.-Sol. + BASE 2 - CARTR. G1/8" GAS
H4= 2x3/2 NC-NO Sol.-Sol. + BASE 2 - CARTR. Ø4
H6= 2x3/2 NC-NO Sol.-Sol. + BASE 2 - CARTR. Ø6
H8= 2x3/2 NC-NO Sol.-Sol. + BASE 2 - CARTR. Ø8
I2= 2x3/2 NO-NC Sol.-Sol. + BASE 2 - CARTR. G1/8" GAS
I4= 2x3/2 NO-NC Sol.-Sol. + BASE 2 - CARTR. Ø4
I6= 2x3/2 NO-NC Sol.-Sol. + BASE 2 - CARTR. Ø6
I8= 2x3/2 NO-NC Sol.-Sol. + BASE 2 - CARTR. Ø8
T1= Free valve space plug + BASE 1 - CARTR. G1/8" GAS
T2= Free valve space plug + BASE 2 - CARTR. G1/8" GAS
T3= Free valve space plug + BASE 1 - CARTR. Ø4
T4= Free valve space plug + BASE 2 - CARTR. Ø4
T5= Free valve space plug + BASE 1 - CARTR. Ø6
T6= Free valve space plug + BASE 2 - CARTR. Ø6
T7= Free valve space plug + BASE 1 - CARTR. Ø8
T8= Free valve space plug + BASE 2 - CARTR. Ø8

NOTE:
While configuring the manifold always be careful that the maximum number of electrical signals available is 32.
The use of monostable valve mounted on a base type 2 (2 electrical signals occupied) causes the loss of one electric signal. In this case the monostable valve can be replaced by a bistable valve. The diaphragms plugs are used to intercept the conduits 1,3 & 5 of the base. If it is necessary to interrupt more than one conduit in the same time then put in line the letters which identifies the position (for exemple : regarding the 3 & 5 conduits, put the Y & Z letters).
Should one or more conduits be cut more than one time it is necessary to add the relevant intermediate Supply/Exhaust module.

ACCESSORIES

U2 = Power supply 2 positions module
U4 = Power supply 4 positions module
W = Intermediate supply & exhaust module
X = Diaphragm plug on pipe 1
Y = Diaphragm plug on pipe 3
Z = Diaphragm plug on pipe 5
XY = Diaphragm plug on pipe 1 & 3
ZX = Diaphragm plug on pipe 5 & 1
ZY = Diaphragm plug on pipe 5 & 3
ZXY = Diaphragm plug on pipe 5, 1 & 3

Series 2500 OPTYMA-T solenoid valve manifolds managed by multipoint connection are "well tried components"

	Well-tried component	- The product is a well-tried product for a safety-related application according to ISO 13849-1. - The relevant basic and well-tried safety principles according ISO 13849-2 for this product are fulfilled. - The suitability of the product for a precise application must be verified and confirmed by the user.
B_{10d}	50.000.000	

2

General:

CANopen® module is directly integrated on Optyma-T solenoid valves manifold via a 37 poles connector, normally used for multipolar cable connection.
Optyma-T solenoid valves connected to node must be PNP equivalent (final 02 in ordering code).
The node can be easily installed also on solenoid valves manifold already mounted on equipment.
Module can manage up to 32 solenoid valves, and, in the same time, a max number of 4 Input modules 5225.08T or a max number of 4 Input modules 5225.12T.
CANopen® module recognizes automatically the presence of the Input modules on power on.
Regardless of the number of Input modules connected, the managable solenoid valves are 32.
Node power supply is made by a M12 4P male circular connector.
The separation between node 24 VDC Power supply and outputs 24 VDC allows to switch off the outputs maintaning powered the node and inputs, if present.
Connection to Bus CANopen® is possible via 2 M12 5P male - female circular connectors; these two are connected in parallel and according to CiA Draft Recommendation 303-1 (V. 1.3 : 30 December 2004).
Transmission speed can be set by 3 dip-switches.
The node address can be set by 6 dip-switches using BCD numeration.
The module includes an internal terminating resistance that can be activated by a dip-switch.

Ordering code

5525.32T

Scheme / Overall dimensions and I/O layout :

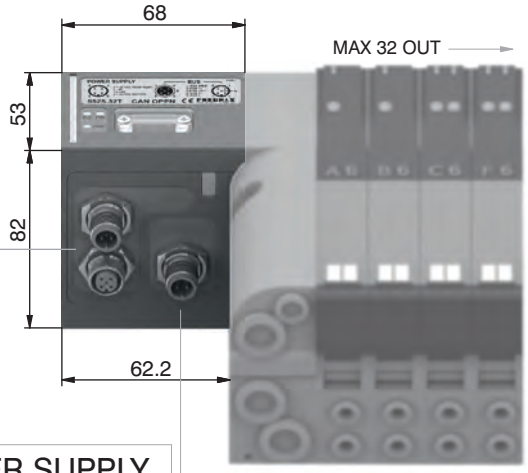

NETWORK connectors

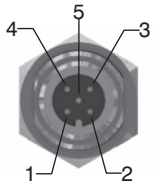

M12 5P MALE

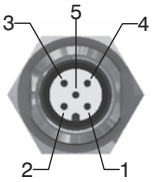

M12 5P FEMALE

PIN	SIGNAL	DESCRIPTION
1	CAN_SHLD	Optional CAN Shield
2	CAN_V+	Optional CAN external positive supply (Dedicated for supply of transceiver and Optocouplers, if galvanic isolation of the bus node applies)
3	CAN_GND	Ground / 0V / V-
4	CAN_H	CAN_H bus line (dominant high)
5	CAN_L	CAN_L bus line (dominant low)

POWER SUPPLY connector

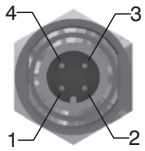

M12 4P MALE

PIN	DESCRIPTION
1	+24 VDC (NODE & INPUTS)
2	NC
3	GND
4	+24 VDC (OUTPUTS)

Technical characteristics

	Model	5525.32T
	Specifications	CiA Draft Standard Proposal 301 V 4.10 (15 August 2006)
	Case	Reinforced technopolymer
Power supply	Power supply connection	M12 4P male connector (IEC 60947-5-2)
	Power supply voltage	+24 VDC +/- 10%
	Node consumption (without inputs)	30 mA
	Power supply diagnosis	Green LED PWR
Outputs	PNP equivalent outputs	+24 VDC +/- 10%
	Maximum current for each output	100 mA
	Maximum output number	32
	Max output simultaneously actuated	32
Network	Network connectors	2 M12 5P connectors male-female Type A (IEC 60947-5-2)
	Baud rate	10 - 20 - 50 - 125 - 250 - 500 - 800 - 1000 Kbit/s
	Addresses, possible numbers	From 1 to 63
	Max nodes in net	64 (slave + master)
	Bus maximum recommended length	100 m at 500 Kbit/s
	Bus diagnosis	Green LED + Red LED
	Configuration file	Available from our web site: http://www.pneumaxspa.com
	IP protection grade	IP65 when assembled
	Temperature range	From 0° to +50° C

General:

DeviceNet module is directly integrated on Optyma-T solenoid valves manifold via a 37 poles connector, normally used for multipolar cable connection.
Optyma-T solenoid valves connected to node must be PNP equivalent (final 02 in ordering code).
The node can be easily installed also on solenoid valves manifold already mounted on equipment.
Module can manage up to 32 solenoid valves, and, in the same time, a max number of 4 Input modules 5225.08T or a max number of 4 Input modules 5225.12T.
DeviceNet module recognizes automatically the presence of the Input modules on power on.
Regardless of the number of Input modules connected, the managable solenoid valves are 32.
Node power supply is made by a M12 4P male circular connector.
The separation between node 24 VDC Power supply and outputs 24 VDC allows to switch off the outputs maintaning powered the node and inputs, if present.
Connection to Bus DeviceNet is possible via 2 M12 5P male - female circular connectors; these two are connected in parallel and according to DeviceNet Specifications Volume I, release 2.0.
Transmission speed can be set by 3 dip-switches.
The node address can be set by 6 dip-switches using BCD numeration.
The module includes an internal terminating resistance that can be activated by a dip-switch.

Ordering code

5425.32T

Scheme / Overall dimensions and I/O layout :

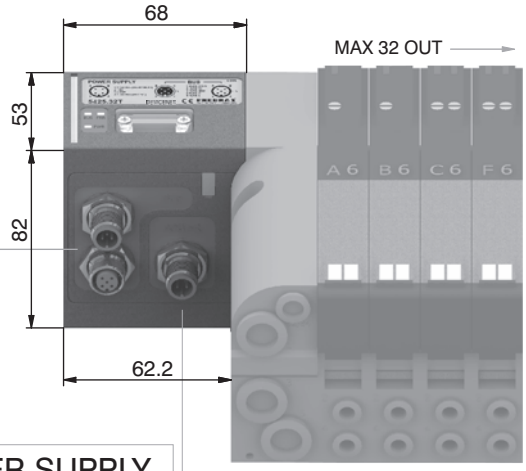

NETWORK connectors

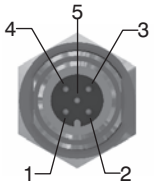

M12 5P MALE

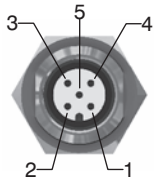

M12 5P FEMALE

PIN	SIGNAL	DESCRIPTION
1	CAN_SHLD	Optional CAN Shield
2	CAN_V+	Optional CAN external positive supply (Dedicated for supply of transceiver and Optocouplers, if galvanic isolation of the bus node applies)
3	CAN_GND	Ground / 0V / V-
4	CAN_H	CAN_H bus line (dominant high)
5	CAN_L	CAN_L bus line (dominant low)

POWER SUPPLY connector

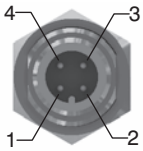

M12 4P MALE

PIN	DESCRIPTION
1	+24 VDC (NODE & INPUTS)
2	NC
3	GND
4	+24 VDC (OUTPUTS)

Technical characteristics

	Model	5425.32T
	Specifications	DeviceNet Specifications Volume I, release 2.0.
	Case	Reinforced technopolymer
Power supply	Power supply connection	M12 4P male connector (IEC 60947-5-2)
	Power supply voltage	+24 VDC +/- 10%
	Node consumption (without inputs)	30 mA
	Power supply diagnosis	Green LED PWR
Outputs	PNP equivalent outputs	+24 VDC +/- 10%
	Maximum current for each output	100 mA
	Maximum output number	32
	Max output simultaneously actuated	32
Network	Network connectors	2 M12 5P connectors male-female Type A (IEC 60947-5-2)
	Baud rate	125 - 250 - 500 Kbit/s
	Addresses, possible numbers	From 1 to 63
	Max nodes in net	64 (slave + master)
	Bus maximum recommended length	100 m at 500 Kbit/s
	Bus diagnosis	Green LED + Red LED
	Configuration file	Available from our web site: http://www.pneumaxspa.com
	IP protection grade	IP65 when assembled
	Temperature range	From 0° to +50° C

2

General:

PROFIBUS DP module is directly integrated on Optyma-T solenoid valves manifold via a 37 poles connector, normally used for multipolar cable connection.
Optyma-T solenoid valves connected to node must be PNP equivalent (final 02 in ordering code).
The node can be easily installed also on solenoid valves manifold already mounted on equipment.
Module can manage up to 32 solenoid valves, and, in the same time, a max number of 8 Input modules 5225.08T or a max number of 8 Input modules 5225.12T.
PROFIBUS DP module recognizes automatically the presence of the Input modules on power on.
Regardless of the number of Input modules connected, the managable solenoid valves are 32.
Node power supply is made by a M12 4P male circular connector.
The separation between node 24 VDC Power supply and outputs 24 VDC allows to switch off the outputs maintaning powered the node and inputs, if present.
Connection to Bus PROFIBUS DP is possible via 2 M12 type B 5P male - female circular connectors; these two are connected in parallel and according to PROFIBUS Interconnection Technology (Version 1.1 : August 2001).
The node address can be set using BCD numeration: 4 dip-switches for the units and 4 dip-switches for the tens.
The module includes an internal terminating resistance that can be activated by 2 dip-switches.

Ordering code

5325.32T

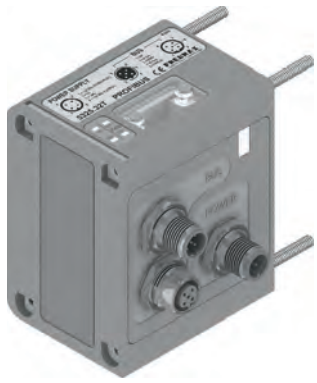

Scheme / Overall dimensions and I/O layout :

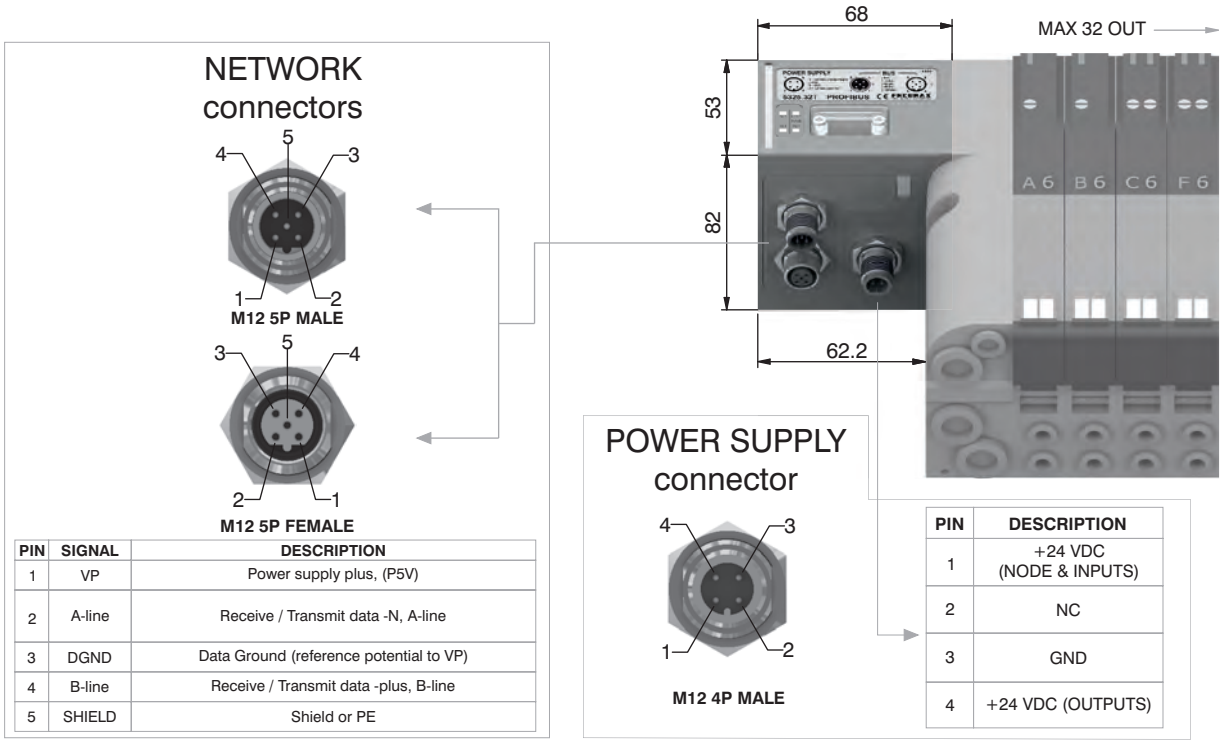

PIN	SIGNAL	DESCRIPTION
1	VP	Power supply plus, (P5V)
2	A-line	Receive / Transmit data -N, A-line
3	DGND	Data Ground (reference potential to VP)
4	B-line	Receive / Transmit data -plus, B-line
5	SHIELD	Shield or PE

PIN	DESCRIPTION
1	+24 VDC (NODE & INPUTS)
2	NC
3	GND
4	+24 VDC (OUTPUTS)

Technical characteristics

	Model	5325.32T
	Specifications	PROFIBUS DP
	Case	Reinforced technopolymer
Power supply	Power supply connection	M12 4P male connector (IEC 60947-5-2)
	Power supply voltage	+24 VDC +/- 10%
	Node consumption (without inputs)	50 mA
	Power supply diagnosis	Green LED PWR / Green LED OUT
Outputs	PNP equivalent outputs	+24 VDC +/- 10%
	Maximum current for each output	100 mA
	Maximum output number	32
	Max output simultaneously actuated	32
Network	Network connectors	2 M12 5P male-female connectors Type B
	Baud rate	9,6 - 19,2 - 93,75 - 187,5 - 500 - 1500 - 3000 - 6000 - 12000 Kbit/s
	Addresses, possible numbers	From 1 to 99
	Max nodes in net	100 (slave + master)
	Bus maximum recommended length	100 m at 12 Mbit/s - 1200 m at 9,6 Kbit/s
	Bus diagnosis	Green LED + Red LED
	Configuration file	Available from our web site: http://www.pneumaxspa.com
	IP protection grade	IP65 when assembled
	Temperature range	From 0° to +50° C

General:

EtherCAT® module is directly integrated on Optyma-T solenoid valves manifold via a 37 poles connector, normally used for multipolar cable connection.
Optyma-T solenoid valves connected to node must be PNP equivalent (final 02 in ordering code).
The node can be easily installed also on solenoid valves manifold already mounted on equipment.
Module can manage up to 32 solenoid valves, and, in the same time, a max number of 4 Input modules 5225.08T or a max number of 4 Input modules 5225.12T.
The EtherCAT® module, regardless the number of Input module connected, reports to have connected 4 Input modules.
Regardless of the number of Input modules connected, the managable solenoid valves are 32.
Node power supply is made by a M12 4P male circular connector.
The separation between node 24 VDC Power supply and outputs 24 VDC allows to switch off the outputs maintaning powered the node and inputs, if present.
Connection to Bus EtherCAT® is possible via 2 M12 4P type D female circular connectors. These two connectors lead the signal to two different communication ports, so they are not connected in parallel.
The node address is assigned during configuration.
Note: 5700 series has a different configuration file from series 5600.

Ordering code

5725.32T.EC

Scheme / Overall dimensions and I/O layout :

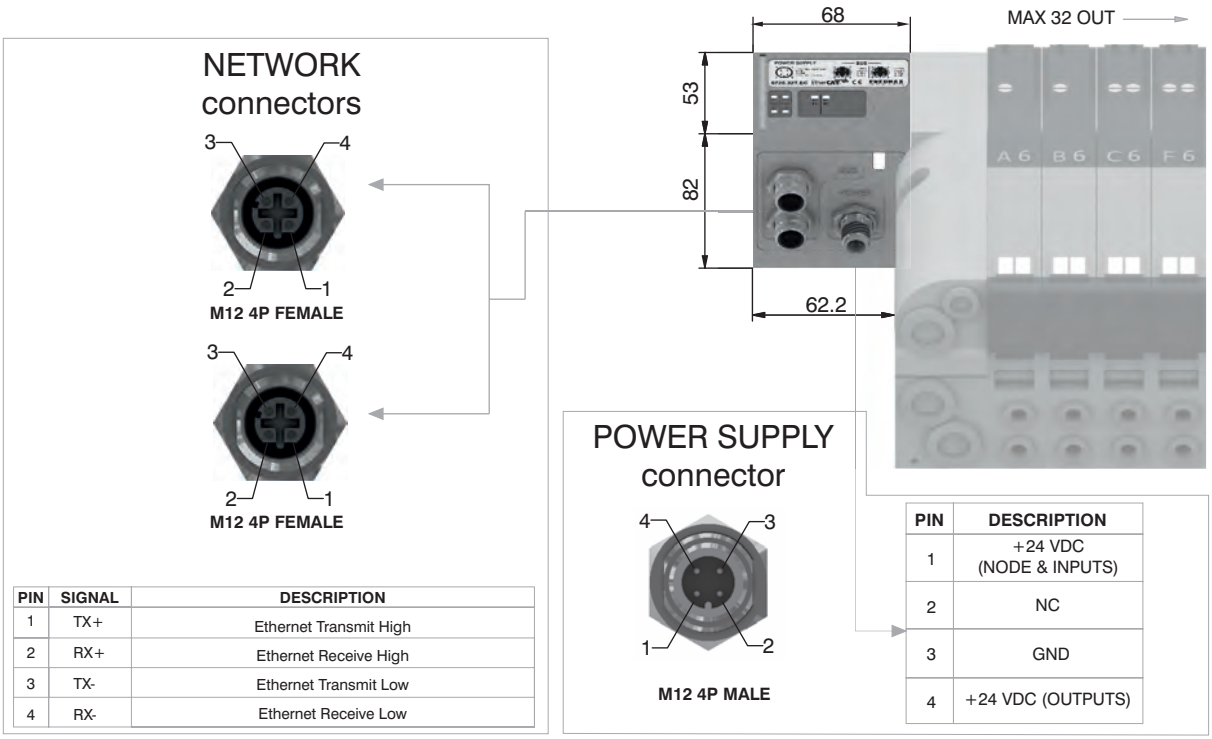

PIN	SIGNAL	DESCRIPTION
1	TX+	Ethernet Transmit High
2	RX+	Ethernet Receive High
3	TX-	Ethernet Transmit Low
4	RX-	Ethernet Receive Low

PIN	DESCRIPTION
1	+24 VDC (NODE & INPUTS)
2	NC
3	GND
4	+24 VDC (OUTPUTS)

Technical characteristics

	Model	5725.32T.EC
	Specifications	EtherCAT® Specifications ETG.1000 series
	Case	Reinforced technopolymer
Power supply	Power supply connection	M12 4P male connector (IEC 60947-5-2)
	Power supply voltage	+24 VDC +/- 10%
	Node consumption (without inputs)	400 mA
	Power supply diagnosis	Green LEDPWR / Green LED OUT
Outputs	PNP equivalent outputs	+24 VDC +/- 10%
	Maximum current for each output	100 mA
	Maximum output number	32
	Max output simultaneously actuated	32
Network	Network connectors	2 M12 4P female connectors Type D (IEC 61076-2-101)
	Baud rate	100 Mbit/s
	Addresses, possible numbers	From 1 to 65535
	Max nodes in net	65536 (Master + Slave)
	Maximum distance between 2 nodes	100 m
	Bus diagnosis	1 green and 1 red LED for status + 2 LEDs for link & activity
	Configuration file	Available from our web site: http://www.pneumaxspa.com
	IP protection grade	IP65 when assembled
	Temperature range	From 0° to +50° C

2

General :

PROFINET IO RT/IRT module is directly integrated on Optyma-T solenoid valves manifold via a 37 poles connector, normally used for multipolar cable connection.
Optyma-T solenoid valves connected to node must be PNP equivalent (final 02 in ordering code).
The node can be easily installed also on solenoid valves manifold already mounted on equipment.
Module can manage up to 32 solenoid valves, and, in the same time, a max number of 8 Input modules 5225.08T or a max number of 8 Input modules 5225.12T.
The PROFINET IO RT/IRT module, regardless the number of Input module connected, reports to have connected 8 Input modules.
Regardless of the number of Input modules connected, the managable solenoid valves are 32.
Node power supply is made by a M12 4P male circular connector.
The separation between node 24 VDC Power supply and outputs 24 VDC allows to switch off the outputs maintaning powered the node and inputs, if present.
Connection to Bus PROFINET IO RT/IRT is possible via 2 M12 4P type D female circular connectors. These two connectors lead the signal to two different communication ports, so they are not connected in parallel.
The node address is assigned during configuration.

Ordering code

5725.32T.PN

Scheme / Overall dimensions and I/O layout :

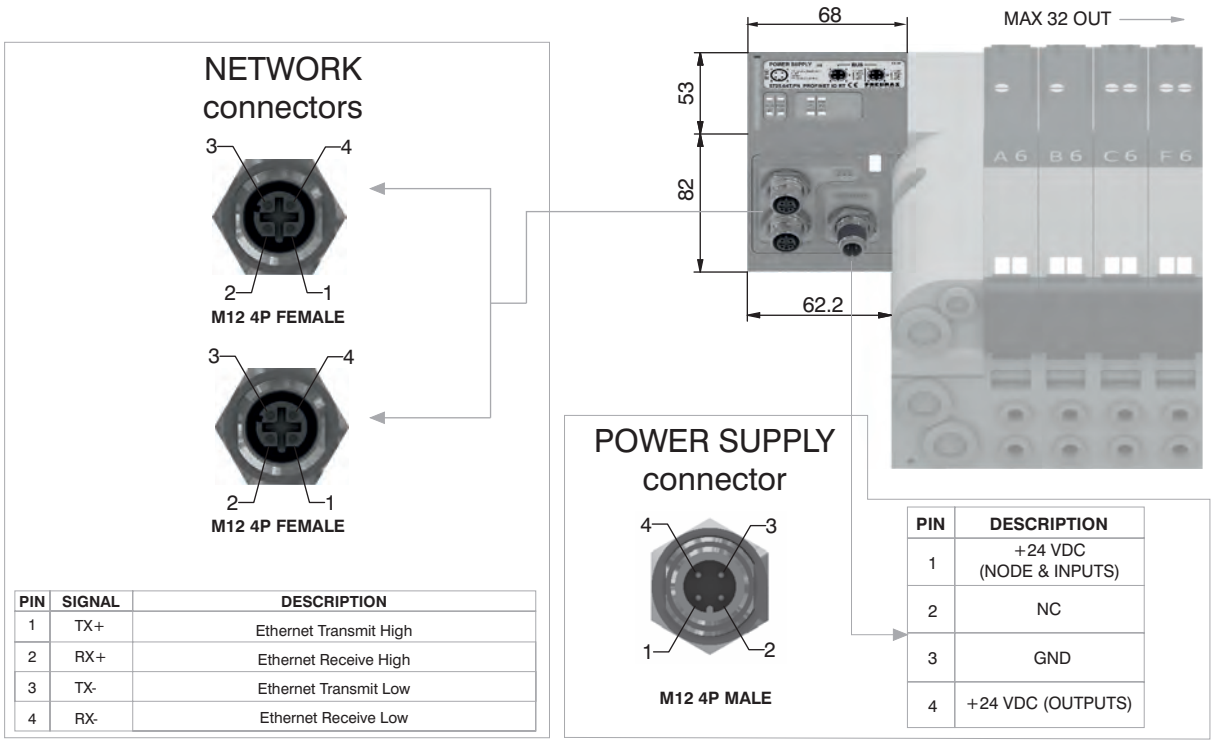

PIN	SIGNAL	DESCRIPTION
1	TX+	Ethernet Transmit High
2	RX+	Ethernet Receive High
3	TX-	Ethernet Transmit Low
4	RX-	Ethernet Receive Low

PIN	DESCRIPTION
1	+24 VDC (NODE & INPUTS)
2	NC
3	GND
4	+24 VDC (OUTPUTS)

Technical characteristics

	Model	5725.32T.PN
	Specifications	PROFINET IO RT/IRT
	Case	Reinforced technopolymer
Power supply	Power supply connection	M12 4P male connector (IEC 60947-5-2)
	Power supply voltage	+24 VDC +/- 10%
	Node consumption (without inputs)	400 mA
	Power supply diagnosis	Green LED PWR / Green LED OUT
Outputs	PNP equivalent outputs	+24 VDC +/- 10%
	Maximum current for each output	100 mA
	Maximum output number	32
	Max output simultaneously actuated	32
Network	Network connectors	2 M12 4P female connectors Type D (IEC 61076-2-101)
	Baud rate	100 Mbit/s
	Addresses, possible numbers	As an IP address
	Max nodes in net	As an Ethernet Network
	Maximum distance between 2 nodes	100 m
	Bus diagnosis	1 green and 1 red LED for status + 4 LEDs for link & activity
	Configuration file	Available from our web site: http://www.pneumaxspa.com
	IP protection grade	IP65 when assembled
	Temperature range	From 0° to +50° C

General :

EtherNet/IP module is directly integrated on Optyma-T solenoid valves manifold via a 37 poles connector, normally used for multipolar cable connection.
Optyma-T solenoid valves connected to node must be PNP equivalent (final 02 in ordering code).
The node can be easily installed also on solenoid valves manifold already mounted on equipment.
Module can manage up to 32 solenoid valves, and, in the same time, a max number of 8 Input modules 5225.08T or a max number of 8 Input modules 5225.12T.
The EtherNet/IP module, regardless the number of Input module connected, reports to have connected 8 Input modules.
Regardless of the number of Input modules connected, the managable solenoid valves are 32.
Node power supply is made by a M12 4P male circular connector.
The separation between node 24 VDC Power supply and outputs 24 VDC allows to switch off the outputs maintaning powered the node and inputs, if present.
Connection to Bus EtherNet/IP is possible via 2 M12 4P type D female circular connectors. These two connectors lead the signal to two different communication ports, so they are not connected in parallel.
The node address is assigned during configuration.

Ordering code

5725.32T.EI

Scheme / Overall dimensions and I/O layout :

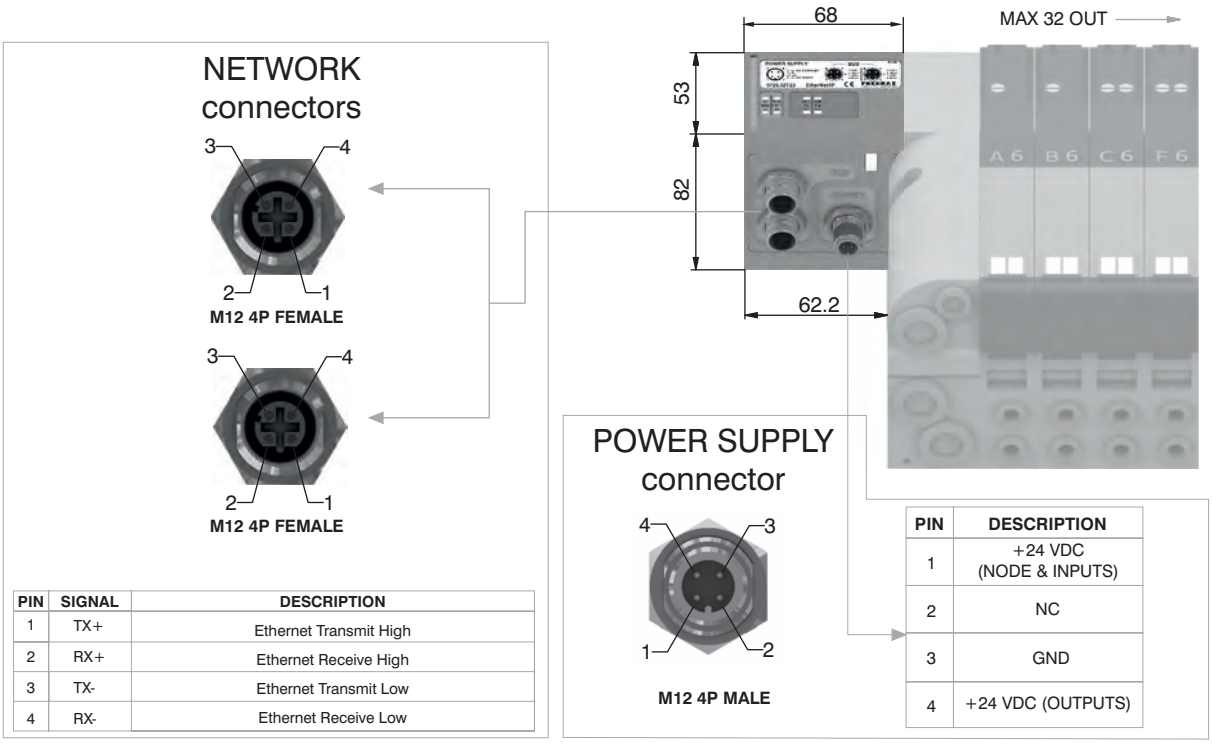

PIN	SIGNAL	DESCRIPTION
1	TX+	Ethernet Transmit High
2	RX+	Ethernet Receive High
3	TX-	Ethernet Transmit Low
4	RX-	Ethernet Receive Low

PIN	DESCRIPTION
1	+24 VDC (NODE & INPUTS)
2	NC
3	GND
4	+24 VDC (OUTPUTS)

Technical characteristics

	Model	5725.32T.EI
	Specifications	The EtherNet/IP Specification
	Case	Reinforced technopolymer
Power supply	Power supply connection	M12 4P male connector (IEC 60947-5-2)
	Power supply voltage	+24 VDC +/- 10%
	Node consumption (without inputs)	400 mA
	Power supply diagnosis	Green LED PWR / Green LED OUT
Outputs	PNP equivalent outputs	+24 VDC +/- 10%
	Maximum current for each output	100 mA
	Maximum output number	32
	Max output simultaneously actuated	32
Network	Network connectors	2 M12 4P female connectors Type D (IEC 61076-2-101)
	Baud rate	100 Mbit/s
	Addresses, possible numbers	As an IP address
	Max nodes in net	As an Ethernet Network
	Maximum distance between 2 nodes	100 m
	Bus diagnosis	1 green and 1 red LED for status + 4 LEDs for link & activity
	Configuration file	Available from our web site: http://www.pneumaxspa.com
	IP protection grade	IP65 when assembled
	Temperature range	From 0° to +50° C

2

General :

Powerlink module is directly integrated on Optyma-T solenoid valves manifold via a 37 poles connector, normally used for multipolar cable connection.
Optyma-T solenoid valves connected to node must be PNP equivalent (final 02 in ordering code).
The node can be easily installed also on solenoid valves manifold already mounted on equipment.
Module can manage up to 32 solenoid valves, and, in the same time, a max number of 8 Input modules 5225.08T or a max number of 8 Input modules 5225.12T.
The Powerlink module, regardless the number of Input module connected, reports to have connected 8 Input modules.
Regardless of the number of Input modules connected, the managable solenoid valves are 32.
Node power supply is made by a M12 4P male circular connector.
The separation between node 24 VDC Power supply and outputs 24 VDC allows to switch off the outputs maintaning powered the node and inputs, if present.
Connection to Bus Powerlink is possible via 2 M12 4P type D female circular connectors. These two connectors lead the signal to two different communication ports, so they are not connected in parallel.
The node address is assigned during configuration.

Ordering code

5725.32T.PL

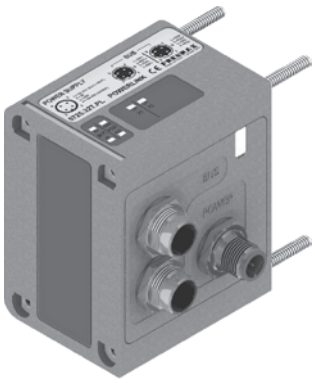

Scheme / Overall dimensions and I/O layout :

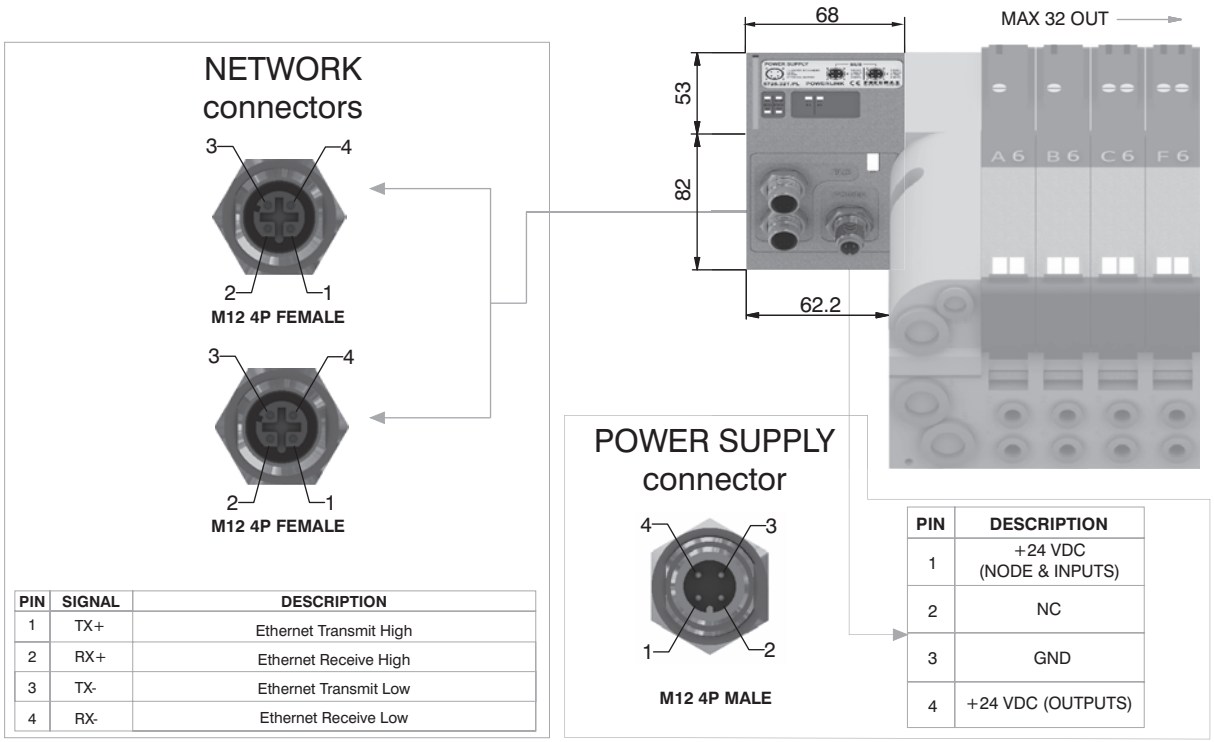

PIN	SIGNAL	DESCRIPTION
1	TX+	Ethernet Transmit High
2	RX+	Ethernet Receive High
3	TX-	Ethernet Transmit Low
4	RX-	Ethernet Receive Low

PIN	DESCRIPTION
1	+24 VDC (NODE & INPUTS)
2	NC
3	GND
4	+24 VDC (OUTPUTS)

Technical characteristics

	Model	5725.32T.PL
	Specifications	Ethernet POWERLINK Communication Profile Specifications
	Case	Reinforced technopolymer
Power supply	Power supply connection	M12 4P male connector (IEC 60947-5-2)
	Power supply voltage	+24 VDC +/- 10%
	Node consumption (without inputs)	400 mA
	Power supply diagnosis	Green LED PWR / Green LED OUT
Outputs	PNP equivalent outputs	+24 VDC +/- 10%
	Maximum current for each output	100 mA
	Maximum output number	32
	Max output simultaneously actuated	32
Network	Network connectors	2 M12 4P female connectors Type D (IEC 61076-2-101)
	Baud rate	100 Mbit/s
	Addresses, possible numbers	239
	Max nodes in net	240
	Maximum distance between 2 nodes	100 m
	Bus diagnosis	1 green and 1 red LED for status + 2 LEDs for link & activity
	Configuration file	Available from our web site: http://www.pneumaxspa.com
	IP protection grade	IP65 when assembled
	Temperature range	From 0° to +50° C

General :

Modbus/TCP module is directly integrated on Optyma-T solenoid valves manifold via a 37 poles connector, normally used for multipolar cable connection.
Optyma-T solenoid valves connected to node must be PNP equivalent (final 02 in ordering code).
The node can be easily installed also on solenoid valves manifold already mounted on equipment.
Module can manage up to 32 solenoid valves, and, in the same time, a max number of 8 Input modules 5225.08T or a max number of 8 Input modules 5225.12T.
The Modbus/TCP module, regardless the number of Input module connected, reports to have connected 8 Input modules.
Regardless of the number of Input modules connected, the managable solenoid valves are 32.
Node power supply is made by a M12 4P male circular connector.
The separation between node 24 VDC Power supply and outputs 24 VDC allows to switch off the outputs maintaning powered the node and inputs, if present.
Connection to Bus Modbus/TCP is possible via 2 M12 4P type D female circular connectors. These two connectors lead the signal to two different communication ports, so they are not connected in parallel.
The node address is assigned during configuration.

Ordering code

5725.32T.MT

Scheme / Overall dimensions and I/O layout :

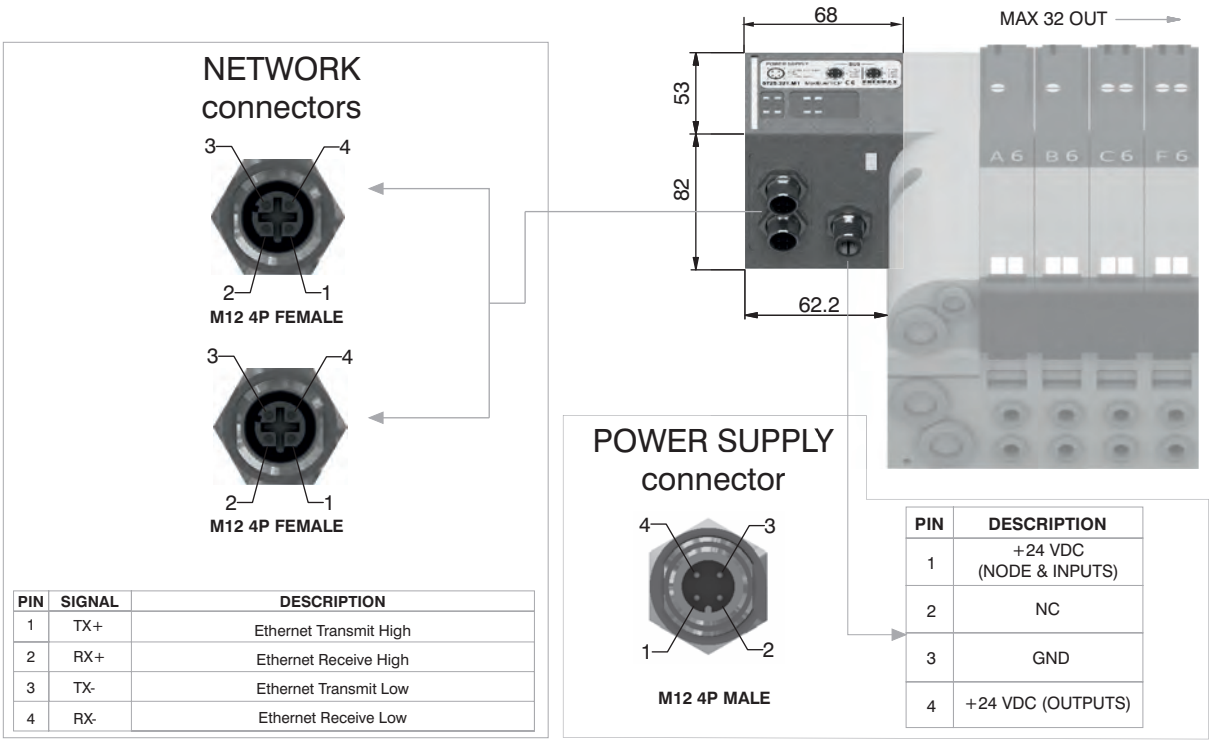

PIN	SIGNAL	DESCRIPTION
1	TX+	Ethernet Transmit High
2	RX+	Ethernet Receive High
3	TX-	Ethernet Transmit Low
4	RX-	Ethernet Receive Low

PIN	DESCRIPTION
1	+24 VDC (NODE & INPUTS)
2	NC
3	GND
4	+24 VDC (OUTPUTS)

Technical characteristics

	Model	5725.32T.MT
	Specifications	MODBUS Application Protocol Specification V1.1a, June 4, 2004
	Case	Reinforced technopolymer
Power supply	Power supply connection	M12 4P male connector (IEC 60947-5-2)
	Power supply voltage	+24 VDC +/- 10%
	Node consumption (without inputs)	400 mA
	Power supply diagnosis	Green LED PWR / Green LED OUT
Outputs	PNP equivalent outputs	+24 VDC +/- 10%
	Maximum current for each output	100 mA
	Maximum output number	32
	Max output simultaneously actuated	32
Network	Network connectors	2 M12 4P female connectors Type D (IEC 61076-2-101)
	Baud rate	100 Mbit/s
	Addresses, possible numbers	248
	Max nodes in net	248
	Maximum distance between 2 nodes	100 m
	Bus diagnosis	1 green and 1 red LED for status + 2 LEDs for link & activity
	Configuration file	Modbus/TCP nodes don't require configuration file
	IP protection grade	IP65 when assembled
	Temperature range	From 0° to +50° C

2

General :

Modules have 8 connectors M8 3P female.

The Inputs are PNP equivalent 24 VDC ±10%.
To each connector it is possible to plug both 2 wires Inputs (switches, magnetic switches pressure switches, etc) or 3 wires Inputs (proximity, photocells, electronic sensors, etc).
The maximum current available for all 8 Inputs is 300 mA.
Each module includes a 300 mA self-mending fuse. If a short circuit or a overcharge (overall current >300mA) occur the safety device acts cutting the 24 VDC power supply to all M8 connectors on the module and switching off the green led PWR. Any other Input module connected to the node will remain powered and will function correctly.
Once the cause of the fault disappears the green LED PWR lights up indicating the ON state and the node will re-start to operate.
The maximum number of Input modules supported is 4 for CANopen®, DeviceNet and EtherCAT®.
The maximum number of Input modules supported is 8 for PROFIBUS DP, PROFINET IO RT/IRT EtherNet/IP and Powerlink.

Ordering code

5225.08T

Scheme / Overall dimensions and I/O layout :

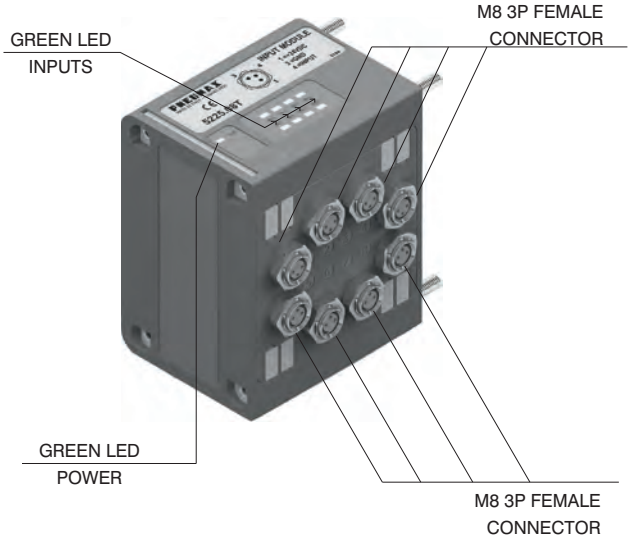

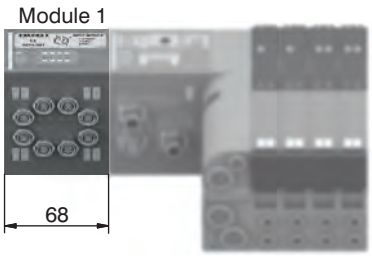

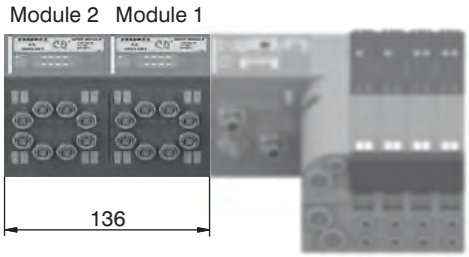

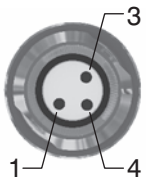

PIN	DESCRIPTION
1	+24 VDC
4	INPUT
3	GND

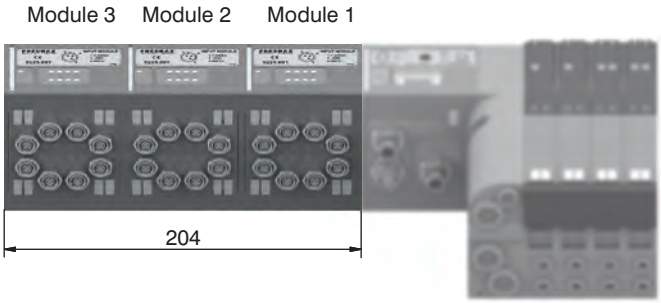

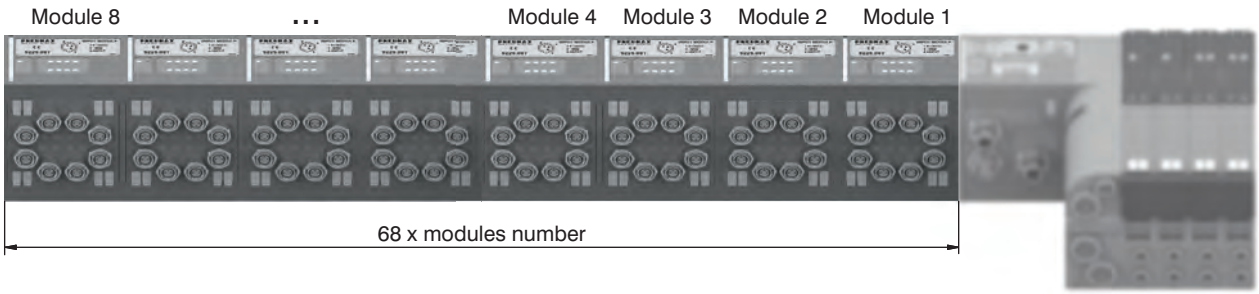

General :

Modules have 4 connectors M12 5P female.

The Inputs are PNP equivalent 24 VDC ±10%.
To each connector it is possible to plug both 2 wires Inputs (switches, magnetic switches pressure switches, etc) or 3 wires Inputs (proximity, photocells, electronic sensors, etc).
The maximum current available for all 8 Inputs is 300 mA.
Each module includes a 300 mA self-mending fuse. If a short circuit or a overcharge (overall current >300mA) occur the safety device acts cutting the 24 VDC power supply to all M8 connectors on the module and switching off the green led PWR. Any other Input module connected to the node will remain powered and will function correctly.
Once the cause of the fault disappears the green LED PWR lights up indicating the ON state and the node will re-start to operate.
The maximum number of Input modules supported is 4 for CANopen®, DeviceNet and EtherCAT®.
The maximum number of Input modules supported is 8 for PROFIBUS DP, PROFINET IO RT/IRT EtherNet/IP and Powerlink.

Ordering code

5225.12T

Scheme / Overall dimensions and I/O layout :

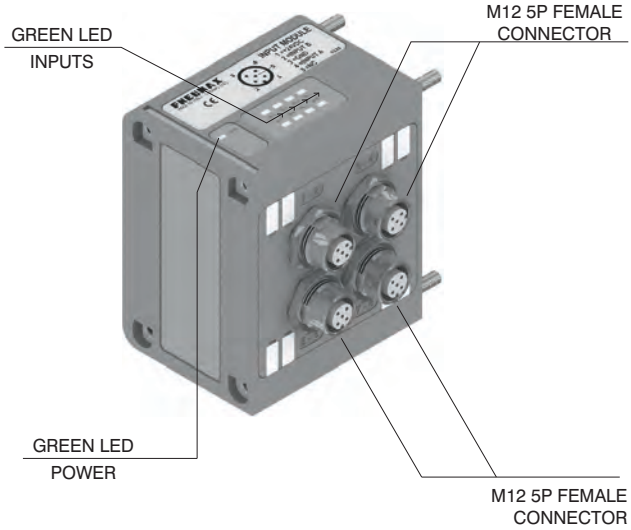

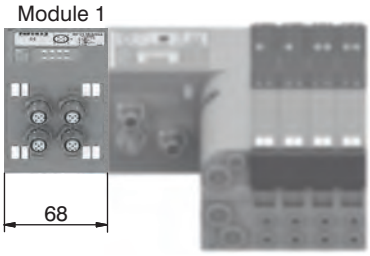

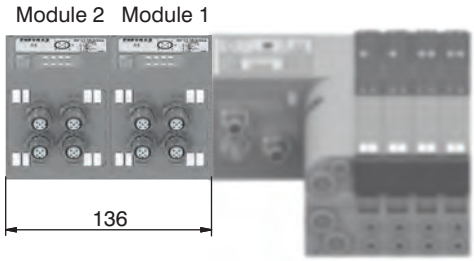

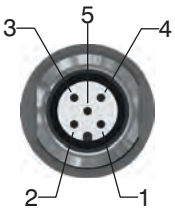

PIN	DESCRIPTION
1	+24 VDC
2	INPUT B
3	GND
4	INPUT A
5	NC

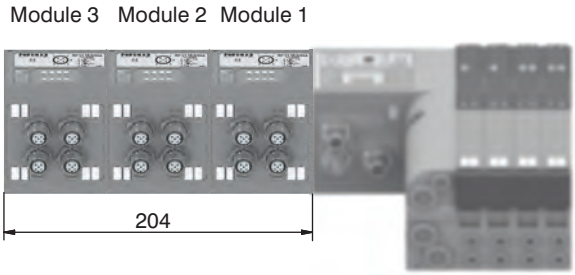

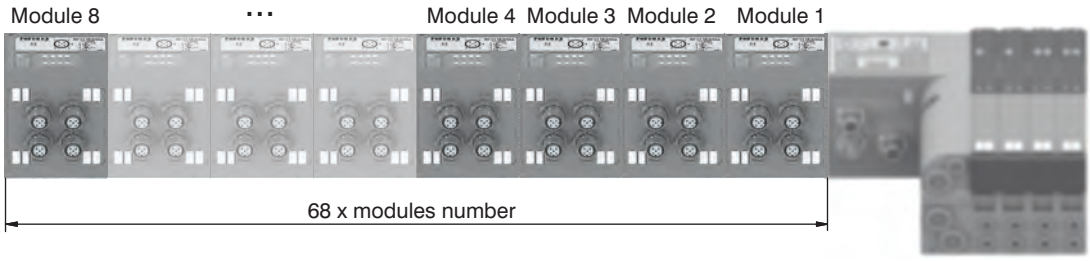

2

General :

This module is fitted with two M8 3 pin female connectors.

With this module is possible to read two analogue inputs (voltage or current).
The inputs are sampled at 12 bit.
For practicality the sampled value is transmitted with 16 bit, of which the four less significant are fixed at zero.

Available models:
5225.2T.00T (voltage signal 0 - 10V);
5225.2T.01T (voltage signal 0 - 5V);
5225.2C.00T (current signal 4 - 20mA);
5225.2C.01T (current signal 0 - 20mA).

Each module includes a 300 mA self-mending fuse. Should a short circuit or a overcharge (overall current >300mA) occur the safety device intervenes cutting the 24VDC power supply to all M8 connectors on the module and switching off the green LED PWR. Any other Input module connected to the node will remain powered and will function correctly. Once the cause of the fault is removed the green LED lights up indicating the ON state and the node will re-start to operate.

This module is counted as four 8 digital Inputs modules.

The Maximum number of 2 analogue Inputs modules supported is 1 for CANopen®, DeviceNet, PROFIBUS DP and EtherCAT®.
The Maximum number of 2 analogue Inputs modules supported is 2 for PROFINET IO RT/IRT, EtherNet/IP and Powerlink.

Ordering code

5225.2 _ . _T

Scheme / Overall dimensions and I/O layout :

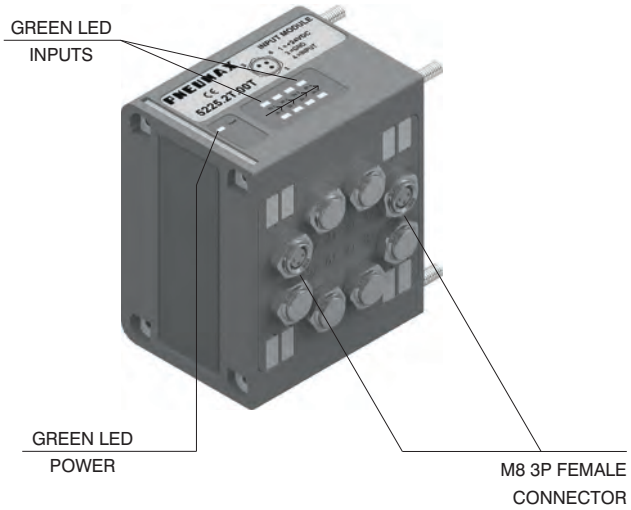

Module 1

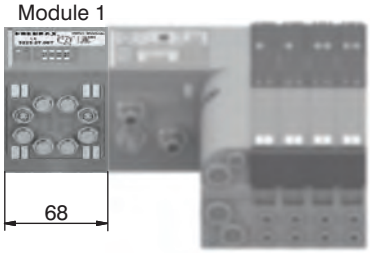

Module 2 Module 1

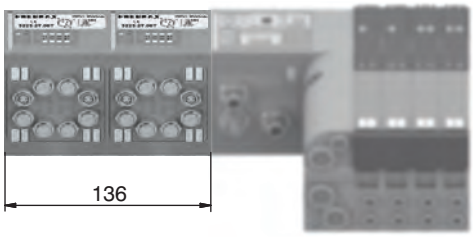

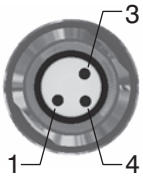

PIN	DESCRIPTION
1	+24 VDC
4	INPUT
3	GND

General :

This module is fitted with two M8 3 pin female connectors.

With this module is possible to read two Pt100 probes.
The inputs are sampled at 12 bit.
For practicality the sampled value is transmitted with 16 bit, of which the four less significant are fixed at zero.

It is possible to plug 3-wires probes or 2-wires probes.
The temperature is expressed in tenths of degree.
The temperature range is 0 – 250°C, beyond which the green LED for probe presence doesn't light on.
The module returns a value correspondent to 250°C when the probe is not connected.

Available models:
5225.2P.00T (2-wires probes);
5225.2P.01T (3-wires probes).

Each module includes a 300 mA self-mending fuse. Should a short circuit or a overcharge (overall current >300mA) occur the safety device intervenes cutting the 24VDC power supply to all M8 connectors on the module and switching off the green LED PWR. Any other Input module connected to the node will remain powered and will function correctly.
Once the cause of the fault is removed the green LED lights up indicating the ON state and the node will re-start to operate.
This module is counted as four 8 digital Inputs modules.

The Maximum number of 2 Pt100 Inputs modules supported is 1 for CANopen®, DeviceNet, PROFIBUS DP and EtherCAT®.
The Maximum number of 2 Pt100 Inputs modules supported is 2 for PROFINET IO RT/IRT, EtherNet/IP and Powerlink.

Ordering code

5225.2P . 0_T

Scheme / Overall dimensions and I/O layout :

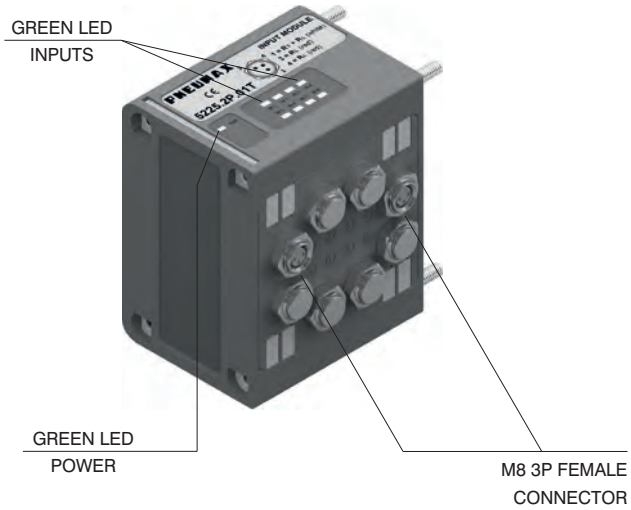

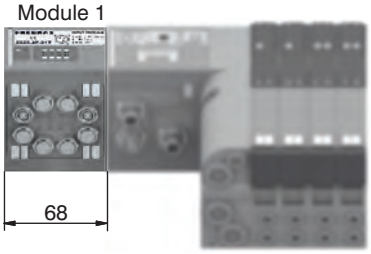

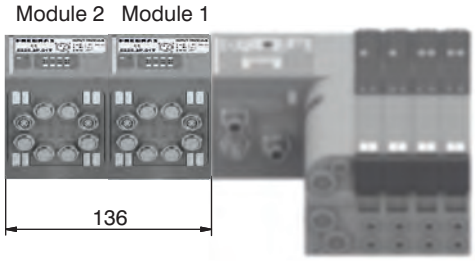

3 WIRES

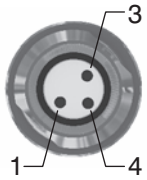

PIN	DESCRIPTION
1	RT (white)
4	RL (red)
3	RL (red)

2 WIRES

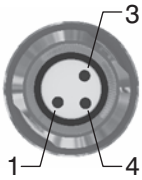

PIN	DESCRIPTION
1	RT (white)
4	NC
3	RL (red)

2

General :

This module is fitted with two M8 3 pin female connectors.

With this module is possible to read two Pt100 probes.
The inputs are sampled at 12 bit.
For practicality the sampled value is transmitted with 16 bit, of which the four less significant are fixed at zero.

It is possible to plug 3-wires probes or 2-wires probes.
The temperature is expressed in points according to the formula

$$\text{Temperature} = \left(\frac{\text{Points}}{4095} \times 600\right) - 200$$

The temperature range is -200 to +400°C, beyond which the green LED for probe presence doesn't light on.
The module returns a value correspondent to 400°C when the probe is not connected.

Available models:
5225.2P.10T (2-wires probes);
5225.2P.11T (3-wires probes).

Each module includes a 300 mA self-mending fuse. Should a short circuit or a overcharge (overall current >300mA) occur the safety device intervenes cutting the 24VDC power supply to all M8 connectors on the module and switching off the green LED PWR. Any other INPUT module connected to the node will remain powered and will function correctly.
Once the cause of the fault is removed the green LED lights up indicating the ON state and the node will re-start to operate.
This module is counted as four 8 digital Inputs modules.

The Maximum number of 2 Pt100 Inputs modules supported is 1 for CANopen®, DeviceNet, PROFIBUS DP and EtherCAT®.
The Maximum number of 2 Pt100 Inputs modules supported is 2 for PROFINET IO RT/IRT, EtherNet/IP and Powerlink.

Ordering code

5225.2P . 1_T

Scheme / Overall dimensions and I/O layout :

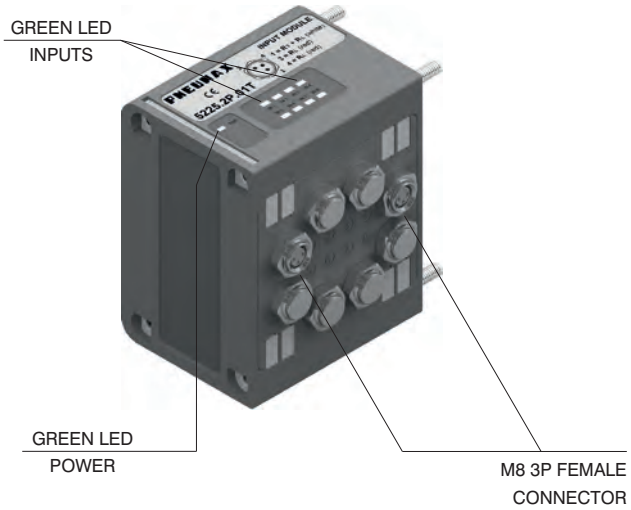

Module 1

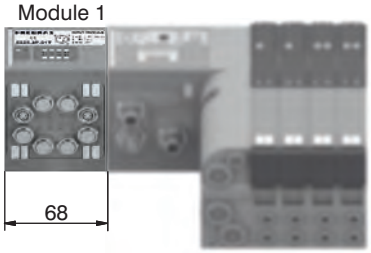

Module 2 Module 1

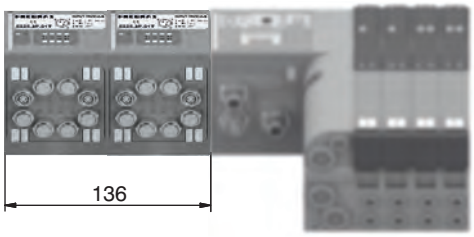

3 WIRES

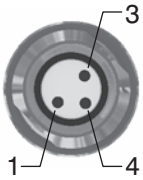

PIN	DESCRIPTION
1	RT (white)
4	RL (red)
3	RL (red)

2 WIRES

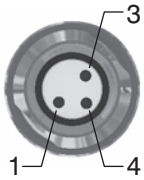

PIN	DESCRIPTION
1	RT (white)
4	NC
3	RL (red)

M12A 4P female Socket

Ordering code

5312A.F04.00

Power supply straight connector.

Upper view Slave connector

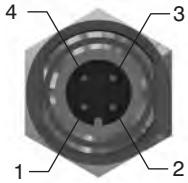

PIN	DESCRIPTION
1	+24 VDC Node
2	
3	0 V
4	+24 VDC Output

M8 3P male Plug

Ordering code

5308A.M03.00

Input straight connector.

Upper view Slave connector

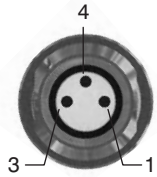

PIN	DESCRIPTION
1	+24 VDC
4	INPUT
3	GND

M12A 5P female Socket

Ordering code

5312A.F05.00

Network straight connector: for Bus CANOpen®, DeviceNet.

Upper view Slave connector

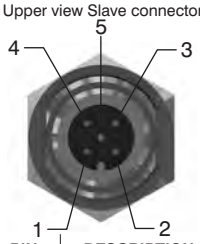

PIN	DESCRIPTION
1	(CAN_SHIELD)
2	(CAN_V+)
3	CAN_GND
4	CAN_H
5	CAN_L

M12A 5P male Plug

Ordering code

5312A.M05.00

Network straight connector: for BUS CANOpen®, DeviceNet.

Upper view Slave connector

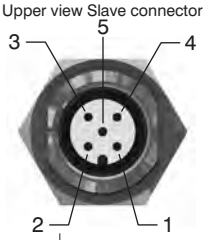

PIN	DESCRIPTION
1	(CAN_SHIELD)
2	(CAN_V+)
3	CAN_GND
4	CAN_H
5	CAN_L

M12B 5P female Plug

Ordering code

5312B.F05.00

Network straight connector: for Bus PROFIBUS DP.

Upper view Slave connector

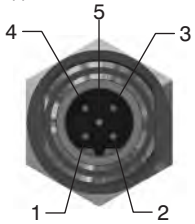

PIN	DESCRIPTION
1	Power Supply
2	A-line
3	DGND
4	B-line
5	SHIELD

M12B 5P male Plug

Ordering code

5312B.M05.00

Network straight connector: for BUS PROFIBUS DP.

Upper view Slave connector

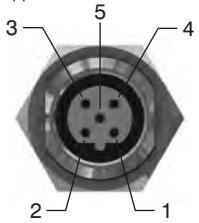

PIN	DESCRIPTION
1	Power Supply
2	A-line
3	DGND
4	B-line
5	SHIELD

M12D 4P male Plug

Ordering code

5312D.M04.00

Network straight connector: for EtherCAT®, PROFINET IO RT/IRT, EtherNet/Ip Powerlink and Modbus/TCP.

Upper view Slave connector

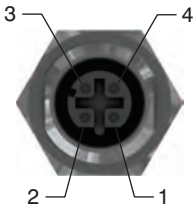

PIN	SIGNAL	DESCRIPTION
1	TX+	Ethernet Transmit High
2	RX+	Ethernet Receive High
3	TX-	Ethernet Transmit Low
4	RX-	Ethernet Receive Low

M12 5P male Plug

Ordering code

5312A.M05.00

Input straight connector.

Upper view Slave connector

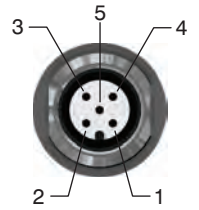

PIN	DESCRIPTION
1	+24 VDC
2	INPUT B
3	GND
4	INPUT A
5	NC

M12 Plug

Ordering code

5300.T12

M8 Plug

Ordering code

5300.T08

Trademarks: EtherCAT® is registered trademark and patented technology, licensed by Beckhoff Automation GmbH, Germany.

2

Manifold Layout configuration

LEFT ENDPLATE

A3 = 37 poles - Self feeding
E3 = 37 poles - External feeding

INPUT MODULES

A = No module
D1= 8 M8 digital inputs module
D2= 8 M12 digital inputs module
T1= 2 analogue inputs 0-5V module
T2= 2 analogue inputs 0-10V module
C1= 2 analogue inputs 0-20mA module
C2= 2 analogue inputs 4-20mA module
P1= 2 Pt100 inputs 2 wires module
P2= 2 Pt100 inputs 3 wires module
E1= 2 Pt100 inputs 2 wires module extended range
E2= 2 Pt100 inputs 3 wires module extended range

RIGHT ENDPLATE

U0 = Closed
U2 = 25 Poles
U3 = 37 Poles

32 OUT VERSION

C3 = CANopen® 32OUT
D3 = DeviceNet 32OUT
P3 = PROFIBUS 32OUT
A3 = EtherCAT® 32OUT (5700 Series)
I3 = EtherNet / IP 32OUT
N3 = PROFINET IO RT/IRT 32OUT
L3 = Powerlink 32OUT
M3 = Modbus/TCP 32OUT

I/O MODULE

M8
(Requires 25 poles right endplate)

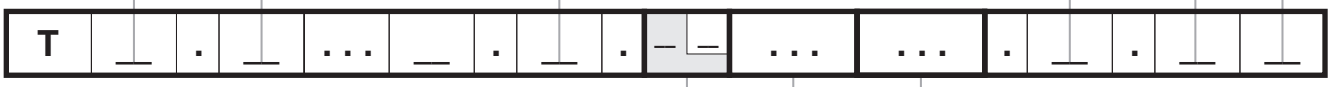

MODULE CONFIGURATION

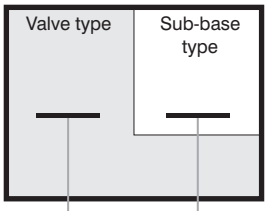

ACCESSORIES CONFIGURATION

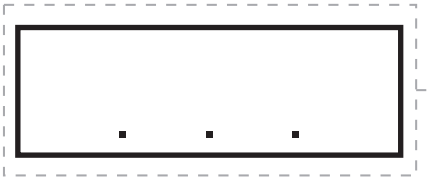

SHORT CODE FUNCTION / CONNECTION :

A1= 5/2 Sol.-Spring + BASE 1 - CARTR. G1/8" GAS
A2= 5/2 Sol.-Spring + BASE 2 - CARTR. G1/8" GAS
A3= 5/2 Sol.-Spring + BASE 1 - CARTR. Ø4
A4= 5/2 Sol.-Spring + BASE 2 - CARTR. Ø4
A5= 5/2 Sol.-Spring + BASE 1 - CARTR. Ø6
A6= 5/2 Sol.-Spring + BASE 2 - CARTR. Ø6
A7= 5/2 Sol.-Spring + BASE 1 - CARTR. Ø8
A8= 5/2 Sol.-Spring + BASE 2 - CARTR. Ø8
B1= 5/2 Sol.-Diff. + BASE 1 - CARTR. G1/8" GAS
B2= 5/2 Sol.-Diff. + BASE 2 - CARTR. G1/8" GAS
B3= 5/2 Sol.-Diff. + BASE 1 - CARTR. Ø4
B4= 5/2 Sol.-Diff. + BASE 2 - CARTR. Ø4
B5= 5/2 Sol.-Diff. + BASE 1 - CARTR. Ø6
B6= 5/2 Sol.-Diff. + BASE 2 - CARTR. Ø6
B7= 5/2 Sol.-Diff. + BASE 1 - CARTR. Ø8
B8= 5/2 Sol.-Diff. + BASE 2 - CARTR. Ø8
C2= 5/2 Sol.-Sol. + BASE 2 - CARTR. G1/8" GAS
C4= 5/2 Sol.-Sol. + BASE 2 - CARTR. Ø4
C6= 5/2 Sol.-Sol. + BASE 2 - CARTR. Ø6
C8= 5/2 Sol.-Sol. + BASE 2 - CARTR. Ø8
E2= 5/3 CC Sol.-Sol. + BASE 2 - CARTR. G1/8" GAS
E4= 5/3 CC Sol.-Sol. + BASE 2 - CARTR. Ø4
E6= 5/3 CC Sol.-Sol. + BASE 2 - CARTR. Ø6
E8= 5/3 CC Sol.-Sol. + BASE 2 - CARTR. Ø8
F2= 2x3/2 NC-NC (= 5/3 OC) Sol.-Sol. + BASE 2 - CARTR. G1/8" GAS
F4= 2x3/2 NC-NC (= 5/3 OC) Sol.-Sol. + BASE 2 - CARTR. Ø4
F6= 2x3/2 NC-NC (= 5/3 OC) Sol.-Sol. + BASE 2 - CARTR. Ø6
F8= 2x3/2 NC-NC (= 5/3 OC) Sol.-Sol. + BASE 2 - CARTR. Ø8
G2= 2x3/2 NO-NO (= 5/3 PC) Sol.-Sol. + BASE 2 - CARTR. G1/8" GAS
G4= 2x3/2 NO-NO (= 5/3 PC) Sol.-Sol. + BASE 2 - CARTR. Ø4
G6= 2x3/2 NO-NO (= 5/3 PC) Sol.-Sol. + BASE 2 - CARTR. Ø6
G8= 2x3/2 NO-NO (= 5/3 PC) Sol.-Sol. + BASE 2 - CARTR. Ø8
H2= 2x3/2 NC-NO Sol.-Sol. + BASE 2 - CARTR. G1/8" GAS
H4= 2x3/2 NC-NO Sol.-Sol. + BASE 2 - CARTR. Ø4
H6= 2x3/2 NC-NO Sol.-Sol. + BASE 2 - CARTR. Ø6
H8= 2x3/2 NC-NO Sol.-Sol. + BASE 2 - CARTR. Ø8
I2= 2x3/2 NO-NC Sol.-Sol. + BASE 2 - CARTR. G1/8" GAS
I4= 2x3/2 NO-NC Sol.-Sol.+ BASE 2 - CARTR. Ø4
I6= 2x3/2 NO-NC Sol.-Sol. + BASE 2 - CARTR. Ø6
I8= 2x3/2 NO-NC Sol.-Sol. + BASE 2 - CARTR. Ø8
T1= Free valve space plug + BASE 1 - CARTR. G1/8" GAS
T2= Free valve space plug + BASE 2 - CARTR. G1/8" GAS
T3= Free valve space plug + BASE 1 - CARTR. Ø4
T4= Free valve space plug + BASE 2 - CARTR. Ø4
T5= Free valve space plug + BASE 1 - CARTR. Ø6
T6= Free valve space plug + BASE 2 - CARTR. Ø6
T7= Free valve space plug + BASE 1 - CARTR. Ø8
T8= Free valve space plug + BASE 2 - CARTR. Ø8

NOTE:
While configuring the manifold always be careful that the maximum number of electrical signals available is 32.
The use of monostable valve mounted on a base type 2 (2 electrical signals occupied) causes the loss of one electric signal. In this case the monostable valve can be replaced by a bistable valve. The diaphragms plugs are used to intercept the conduits 1,3 & 5 of the base. If it is necessary to interrupt more than one conduit in the same time then put in line the letters which identifies the position (for exemple : regarding the 3 & 5 conduits, put the Y & Z letters).
Should one or more conduits be cut more than one time it is necessary to add the relevant intermediate Supply/Exhaust module.

ACCESSORIES

U2 = Power supply 2 positions module
U4 = Power supply 4 positions module
W = Intermediate supply & exhaust module
X = Diaphragm plug on pipe 1
Y = Diaphragm plug on pipe 3
Z = Diaphragm plug on pipe 5
XY = Diaphragm plug on pipe 1 & 3
ZX = Diaphragm plug on pipe 5 & 1
ZY = Diaphragm plug on pipe 5 & 3
ZXY = Diaphragm plug on pipe 5, 1 & 3

AIR SERVICE UNITS

Air Service Units - Size 1
Filter / Coalescing filter / Panel mounting pressure regulator / Panel mounting pressure regulator including manometer / Modular pressure regulator / Modular pressure regulator including manometer / Manifold pressure regulators / Lubricator / Filter - pressure regulator / Progressive start-up valve / Shut-off valve / Filter pressure regulator + Lubricator / Filter + Pressure regulator + Lubricator / High sensitive air pressure regulator with high flow rate relieving / Pressure Switch complete with adapter / Accessories

Air Service Units - Size 2
Filter / Coalescing filter / Pressure regulator / Pressure regulator including manometer / Lubricator / Filter - pressure regulator / Progressive start-up valve / Shut-off valve / Filter pressure regulator + Lubricator / Filter + Pressure regulator + Lubricator / High sensitive air pressure regulator with high flow rate relieving / Pressure Switch complete with adapter / Accessories

Air Service Units - Size 3
Filter / Coalescing filter / Pressure regulator / Pressure regulator including manometer / Lubricator / Filter - pressure regulator / Progressive start-up valve / Shut-off valve / Filter pressure regulator + Lubricator / Filter + Pressure regulator + Lubricator / High sensitive air pressure regulator with high flow rate relieving / Filter G 3/4" / Coalescing filter G 3/4" / Pressure regulator G 3/4" / Lubricator G 3/4" / Filter - pressure regulator G 3/4" / Filter pressure regulator + Lubricator G 3/4" / Filter + Pressure regulator + Lubricator G 3/4" / Pressure Switch complete with adapter / Accessories

Air Service Units - Size 4
Filter / Coalescing filter / Pressure regulator / Lubricator / Progressive start-up valve / Filter + Pressure regulator + Lubricator / Shut-off valve / Pressure Switch complete with adapter / Accessories

FRL INOX Steel line series, Sizes 2 - 3 - 4

Electronic proportional regulator, Sizes 0 - 1 - 3
Standard version, ECONOMIC Version, Version with CANopen protocol and Version with CANopen protocol M12 connector.
Size 0 / Size 1 / Size 3
Miniaturized Electronic proportional regulator, Sizes 0 - 1 - 3

Pressure booster
ø40 / ø40 complete with pressure regulator - ø63 / ø63 complete with pressure regulator - ø100 / ø100 complete with pressure regulator / Accessories
Pressure booster Series P+
ø40 / ø40 complete with pressure regulator

AIR SERVICE UNITS Series AIRPLUS

Filter (F) / Coalescing filter (D) / Pressure regulator (R) and including gauge (RM) / Modular pressure regulator (B) and including gauge (M) - Manifold pressure regulator *(only for Size 1)* / Filter - regulator (E) and including gauge (EM) / Lubricator (L) / Shut-off valve (VL) / Electric Shut-off valve (VE) / Progressive start-up valve (AP) / Air intake (PA) / Pressure Switch (PP) / Accessories / 2 or more component service unit assembled.

General

The operational safety and durability of a pneumatic circuit depends on the quality of the compressed air. The compressed air and the moisture increase the rate of wear of the surfaces and seals, reducing the efficiency and the life of the pneumatic components. Furthermore the pressure fluctuation due to a discontinuous demand of air, adversely effect the correct operation of the circuit.
To eliminate these disadvantages it is essential to install the service units: filter, pressure regulator and lubricator.

Construction and working characteristics

The great advantage of these Air Service Unit's components is their Modular Design which allows their assembly without the use of additional devices.
Two different version have been designed for this size: one made with zinc alloy body and the other with reinforced technopolymer body and threaded brass connections.
The bowls are made of transparent technopolymer and are also available with shock resistant technopolymer protection on request, always allowing the moisture and oil level control from any angle.
The filter can be equipped with manual or semiautomatic water drain valve; furthermore it's possible to install the automatic draining device inside the bowl.
The pressure regulator handle is lockable in the desired position by simply pressing it downwards.
The lubricator oil flow is adjustable with proper handle and it is visibly checked through the sight dome.
The shut-off valve can be equipped with pad-lock to prevent accidents or damages due to unauthorized operation.
The progressive start-up valve, pneumatically or electropneumatically controlled, allows air supply to the circuit progressively and with adjustable time.
The accessories like the wall fixing brackets, pressure gauges with different scales and diameters and the air intake blocks are completing the range. They are assembled between the elements to get filtered or filtered non-lubricated air in the system.

Instruction for installation and operation

Pay attention to install a group or a single component with air flow direction according to the arrows and to the following sequence: filter, pressure regulator, lubricator and with bowls downwards. The group can be fixed to the wall by removing the covers, which can be installed again after fixing for covering the screws.
Do not exceed the recommended torque while assembling the connectors.
Do not exceed the recommended air pressure and temperature limits.
The moisture should not exceed the level marked on the bowl and it can be drawn off and carried by a flexible tube of Ø 6/4 directly connected to the discharge valve handle. The pressure should be set from minimum to maximum, rotating the adjusting handle clockwise. As lubricant, we suggest to use oil class FD22 or HG32. Verify that the lubricator is not fed with a flow lower than the minimum operational.
To set the oil flow rotate the proper adjusting handle in order to get one drop of oil every 300-600 liters of air.
The oil flow will be kept automatically and proportionally to the air flow.
The oil can be refilled by mean of proper plug or directly into the bowl after having de-pressurized the system. Do not exceed the maximum level indicated on the bowl. For opening the shut-off valve push and rotate clockwise the operating handle. For closing it and consequently discharging the down stream line, rotate the handle counter-clockwise.

Maintenance

Clean the bowls with water and detergent. Do not use alcohol. The filter element made with HPDE is reusable by blowing and cleaning it with proper detergent. For replacing or cleaning it, remove the bowl and unscrew the baffle spins. Replace the pressure regulator diaphragm whenever the operation is not correct or there is a continuos air leaking through the relieving (over pressure discharge); reinstall the adjusting mechanism support, locking it with about 8 Nm torque. In case it is necessary to replace the lubricator transparent dome, tight it at 5 Nm torque maximum.

Assembling

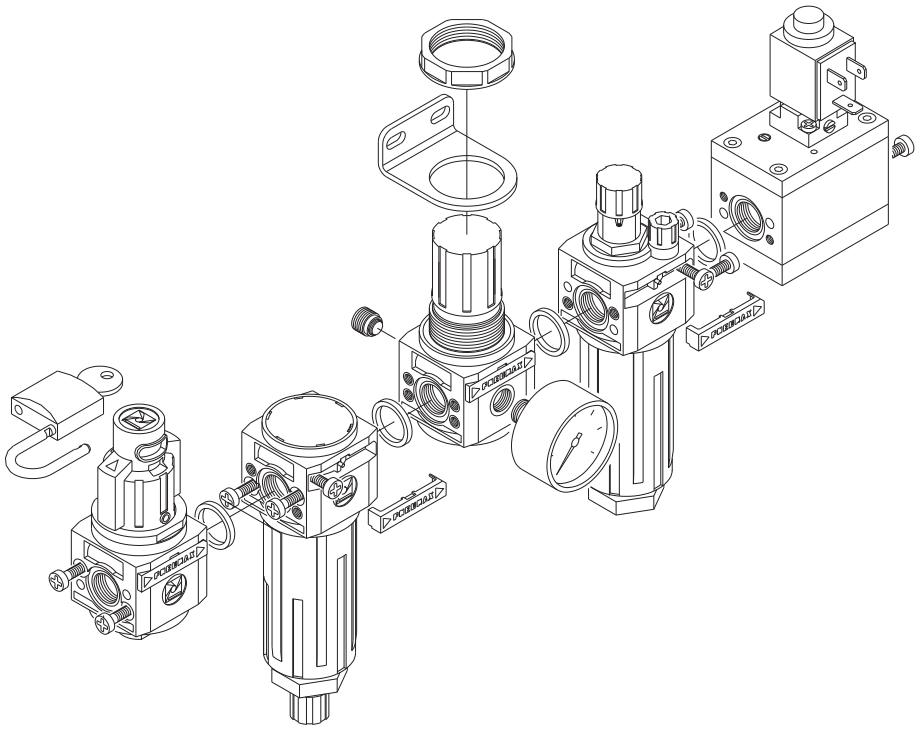

Filter

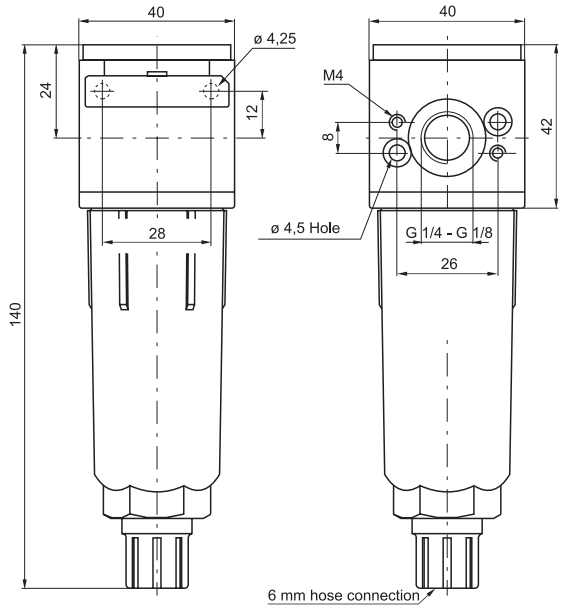

Ordering code

17Ⓥ01Ⓒ.Ⓢ.Ⓣ

Ⓥ	VERSION
	0 = Zinc alloy body
	1 = Technopolymer body
Ⓒ	CONNECTIONS
	A = G 1/8"
	B = G 1/4"
Ⓢ	Filter pore size
	A = 5μ
	B = 20μ
	C = 50μ
Ⓣ	TYPE
	P = Bowl protection
	S = Automatic drain
	PS = Bowl protection and Automatic drain

Example: 17101A.B.P
Filter size 1 with G 1/8" connections, filter pore size 20μ and bowl protection with technopolymer body.

Flow rate curves

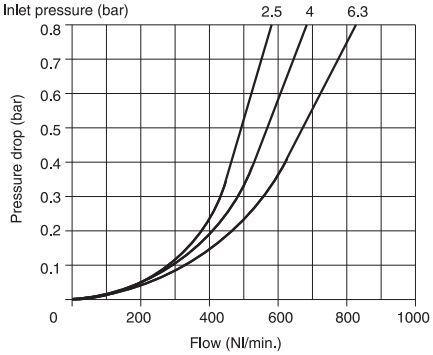

Operational characteristic

- Double filtering action: by air centrifuging and by replaceable and reusable HDPE porous filter element.
- Zinc alloy body or reinforced technopolymer body with threaded aluminium insert connections.
- Wall mounting possibility with M4 screws protected by covers.
- Transparent technopolymer bowl screwed to the body.
- Shock resistant bowl technopolymer protection.
- Manual and semi-automatic water drain valve; in the semi-automatic version the drainage happens when there is no pressure or by pushing the valve up-wards.
- Possibility to see the water level on 360° also with bowl protection assembled.
- Automatic water drainage bowl available on request.

Technical characteristic

Connections	G 1/8" - G 1/4"
Max working pressure (bar)	13 bar - 1,3 MPa
Minimum working pressure with automatic drain (bar)	0,5
Maximum working pressure with automatic drain (bar)	10
Temperature °C	50°C
Weight with technopolymer body	gr. 103
Weight with zinc alloy body	gr. 218
Filter pore size	5μ - 20μ - 50μ
Bowl capacity	20 cm³
Assembly position	Vertical
Wall fixing screw	M4
Max. fittings torque on zinc alloy body	30 Nm
Max. fittings torque on technopolymer body	15 Nm

Coalescing filter

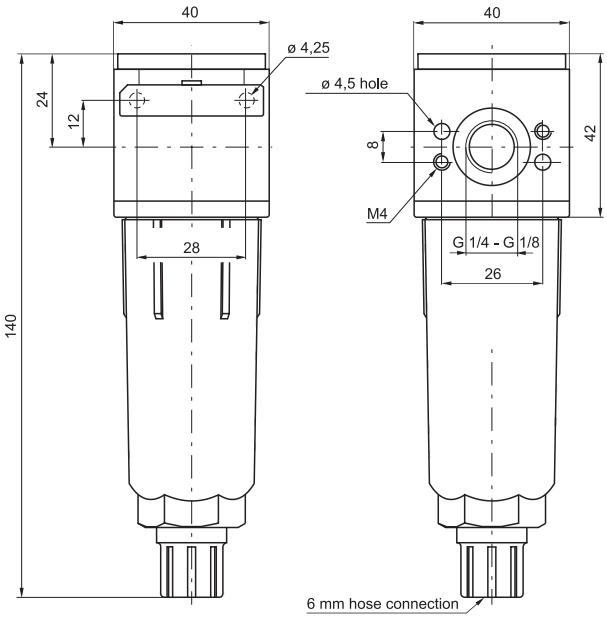

Ordering code

17Ⓥ08Ⓒ.Ⓔ.Ⓣ

Ⓥ	VERSION
	0 = Zinc alloy body
	1 = Technopolymer body
Ⓒ	CONNECTIONS
	A = G 1/8"
	B = G 1/4"
Ⓔ	FILTER EFFICIENCY
	E = 99,97%
Ⓣ	TYPE
	P = Bowl protection
	S = Automatic drain
	PS = Bowl protection and Automatic drain

Example: 17108A.E.P
Filter size 1 with G 1/8" connections. Filter efficiency 99,97% and bowl protection with technopolymer body.

Flow rate curves

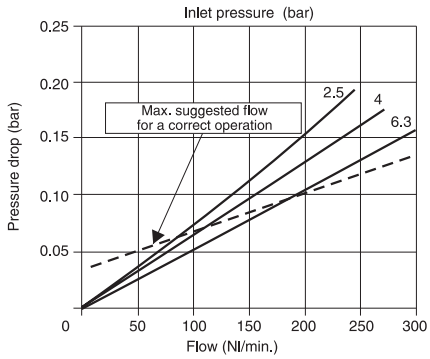

Operational characteristic

- Coalescing filter element remove 0,01μ particle equivalent to 99,97%.
- Zinc alloy body or reinforced technopolymer body with threaded aluminium insert connections.
- Wall mounting possibility with M4 screws protected by covers.
- Transparent technopolymer bowl screwed to the body.
- Shock resistant bowl technopolymer protection.
- Manual and semi-automatic water drain valve; in the semi-automatic version the drainage happens when there is no pressure or by pushing the valve up-wards.
- Possibility to see the water level on 360° also with bowl protection assembled.
- Automatic water drainage bowl available on request.

Technical characteristic

Connections	G 1/8" - G 1/4"
Max working pressure (bar)	13 bar - 1,3 MPa
Minimum working pressure with automatic drain (bar)	0,5
Maximum working pressure with automatic drain (bar)	10
Temperature °C	50°C
Weight with technopolymer body	gr. 110
Weight with zinc alloy body	gr. 225
Filter efficiency with 0,01μ particle	99,97%
Bowl capacity	20 cm³
Assembly position	Vertical
Wall fixing screw	M4
Max. fittings torque on zinc alloy body	30 Nm
Max. fittings torque on technopolymer body	15 Nm

Panel mounting pressure regulator

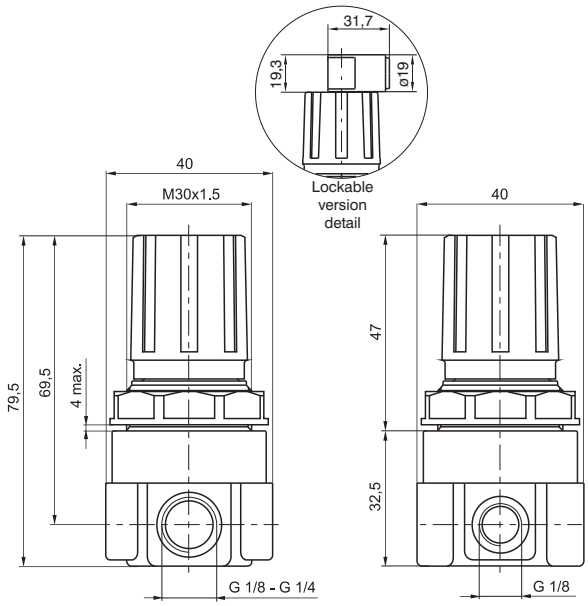

Ordering code

17109Ⓒ.Ⓖ.Ⓣ.Ⓞ

Ⓒ	CONNECTIONS
	A = G 1/8"
	B = G 1/4"
Ⓖ	ADJUSTING RANGE
	A = 0 - 2 bar
	B = 0 - 4 bar
	C = 0 - 8 bar
	D = 0 - 12 bar
Ⓣ	TYPE
	L = no Relieving
	SM = improved relieving
	SR = Quick exhaust (Unbalanced poppet)
	SRM = Quick exhaust with improved relieving
	SMF = Improved relieving with controlled refiel
Ⓞ	OPTION
	=Standard (without options)
	K = Version with padlock

Example: 17109A.C
Panel mounting pressure regulator size 1 with G 1/8" connections, 0 - 8 bar adjusting range with relieving.

Flow rate curves

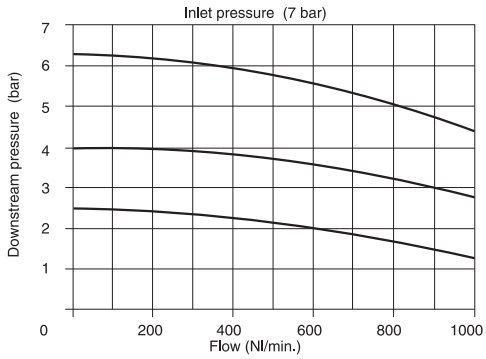

Adjustment characteristics

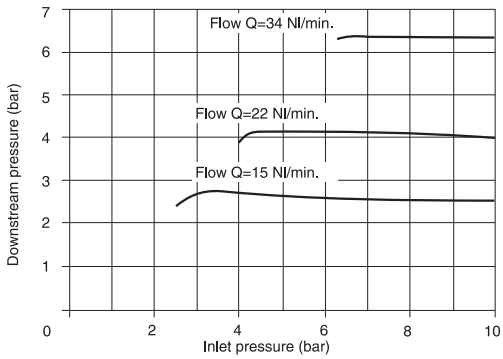

Operational characteristic

- Diaphragm pressure regulator with relieving.
- Balanced poppet.
- Technopolymer body with aluminum reinforced threaded connections.
- Handle lockable in the desired position by simply pressing it downwards.
- Two pressure gauge connections with plug complete of seal.
- Panel mounting bracket.

Technical characteristic

Connections	G 1/8" - G 1/4"
Max working pressure (bar)	13 bar - 1,3 MPa
Temperature °C	50°C
Pressure gauge connections	G 1/8"
Weight	gr. 110
Pressure range (bar)	0 - 2 / 0 - 4 / 0 - 8 / 0 - 12
Assembly position	Any
Max. fittings torque	15 Nm

Panel mounting pressure regulator including manometer

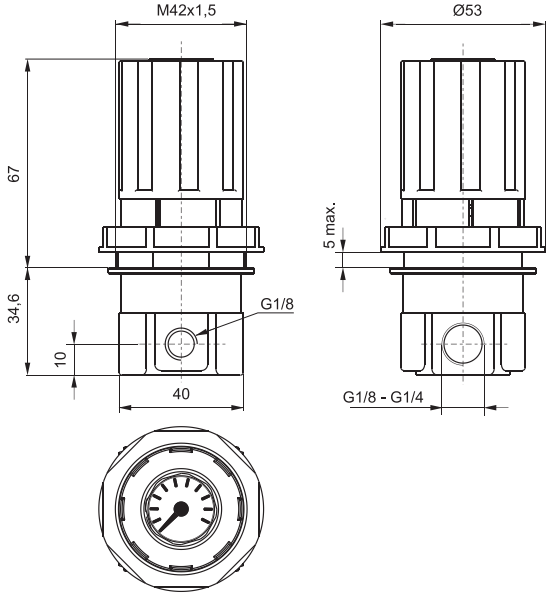

Ordering code

17129Ⓒ.Ⓖ

Ⓒ	CONNECTIONS
	A = G 1/8"
	B = G 1/4"
Ⓖ	ADJUSTING RANGE
	A = 0 - 2 bar
	B = 0 - 4 bar
	C = 0 - 8 bar
	D = 0 - 12 bar

Example: 17129A.C
Panel mounting pressure regulator size 1 with G 1/8" connections, 0 - 8 bar.

Flow rate curves

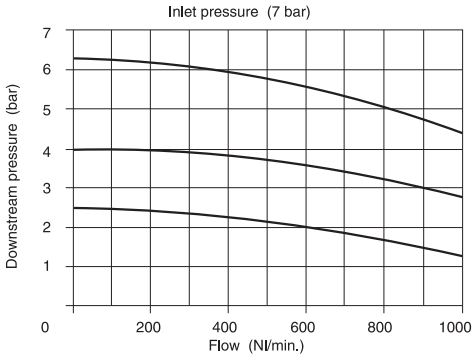

Adjustment characteristics

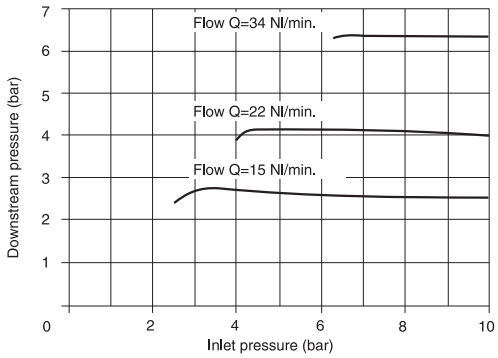

Operational characteristic

- Diaphragm pressure regulator with relieving.
- Balanced poppet.
- Technopolymer body with aluminum reinforced threaded connections.
- Handle lockable in the desired position by simply pressing it downwards.
- Including manometer in the handle upper surface.
- Panel mounting bracket.

Technical characteristic

Connections	G 1/8" - G 1/4"
Max working pressure (bar)	13 bar - 1,3 MPa
Temperature °C	50°C
Pressure gauge connections	G 1/8"
Weight	gr. 250
Pressure range (bar)	0 - 2 / 0 - 4 / 0 - 8 / 0 - 12
Assembly position	Any
Max. fittings torque	15 Nm

Modular pressure regulator

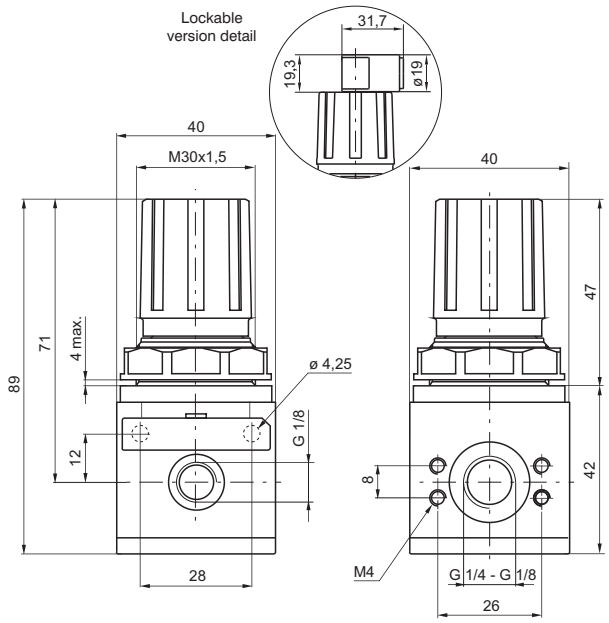

Ordering code

17Ⓥ02Ⓒ.Ⓖ.Ⓣ.Ⓞ

Ⓥ	VERSION
	0 = Zinc alloy body
	1 = Technopolymer body
Ⓒ	CONNECTIONS
	A = G 1/8"
	B = G 1/4"
Ⓖ	ADJUSTING RANGE
	A = 0 - 2 bar
	B = 0 - 4 bar
	C = 0 - 8 bar
	D = 0 - 12 bar
Ⓣ	TYPE
	L = no Relieving
	SM = improved relieving
Ⓞ	OPTION
	=Standard (without options)
	K = Version with padlock

Example: 17102A.C
Pressure regulator size 1 with G 1/8" connections and 0 - 8 bar adjusting range with relieving with technopolymer body.

Flow rate curves

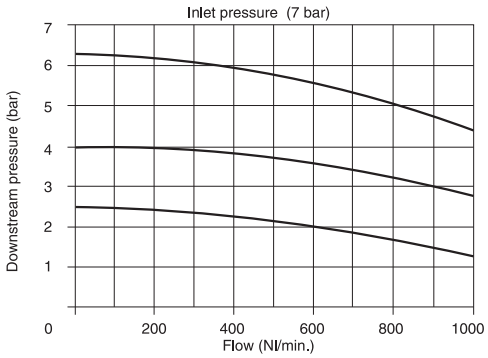

Adjustment characteristics

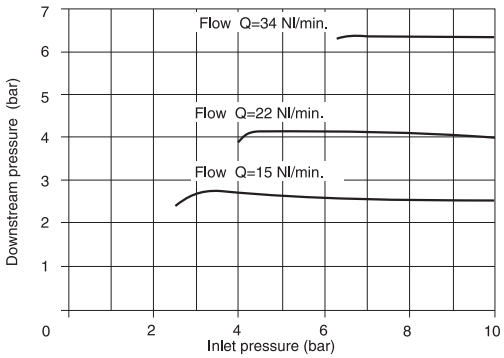

Operational characteristic

- Diaphragm pressure regulator with relieving.
- Balanced poppet.
- Zinc alloy body or reinforced technopolymer body with threaded aluminium insert connections.
- Wall mounting possibility with M4 screws protected by covers.
- Handle lockable in the desired position by simply pressing it downwards.
- Two pressure gauge connections with plug complete of seal.
- Panel mounting bracket.

Technical characteristic

Connections	G 1/8" - G 1/4"
Max working pressure (bar)	13 bar - 1,3 MPa
Temperature °C	50°C
Pressure gauge connections	G 1/8"
Weight with technopolymer body	gr. 135
Weight with zinc alloy body	gr. 250
Pressure range (bar)	0 - 2 / 0 - 4 / 0 - 8 / 0 - 12
Assembly position	Any
Wall fixing screw	M4
Max. fittings torque on zinc alloy body	25 Nm
Max. fittings torque on technopolymer body	15 Nm

Modular pressure regulator including manometer

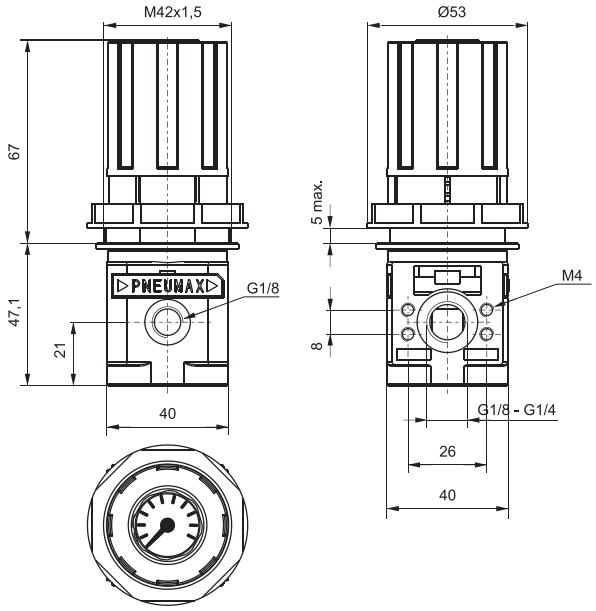

Ordering code

17Ⓥ22Ⓒ.Ⓖ

Ⓥ	VERSION
	0 = Zinc alloy body
	1 = Technopolymer body
Ⓒ	CONNECTIONS
	A = G 1/8"
	B = G 1/4"
Ⓖ	ADJUSTING RANGE
	A = 0 - 2 bar
	B = 0 - 4 bar
	C = 0 - 8 bar
	D = 0 - 12 bar

Example: 17022A.C
Pressure regulator size 1 with G 1/8" connections and 0 - 8 bar adjusting range with relieving with Zinc alloy body.

Flow rate curves

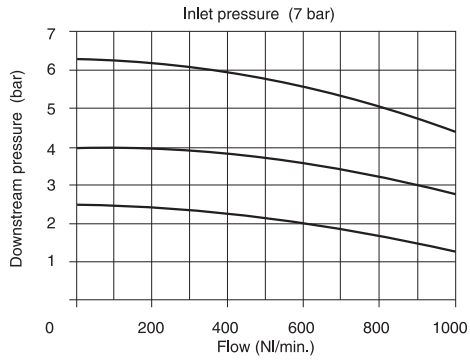

Adjustment characteristics

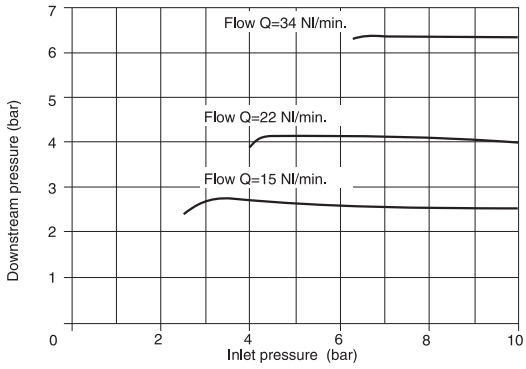

Operational characteristic

- Diaphragm pressure regulator with relieving.
- Pressure gauge included on the top of adjusting knob.
- Balanced poppet.
- Zinc alloy body or reinforced technopolymer body with threaded aluminium insert connections.
- Wall mounting possibility with M4 screws protected by covers.
- Lockable handle by simply pressing it downwards in the desired position.
- Panel mounting bracket.

Technical characteristic

Connections	G 1/8" - G 1/4"
Max working pressure (bar)	13 bar - 1,3 MPa
Temperature °C	50°C
Pressure gauge connections	G 1/8"
Weight with technopolymer body	gr. 250
Weight with zinc alloy body	gr. 380
Pressure range (bar)	0 - 2 / 0 - 4 / 0 - 8 / 0 - 12
Assembly position	Any
Wall fixing screw	M4
Max. fittings torque on zinc alloy body	25 Nm
Max. fittings torque on technopolymer body	15 Nm

Manifold pressure regulators

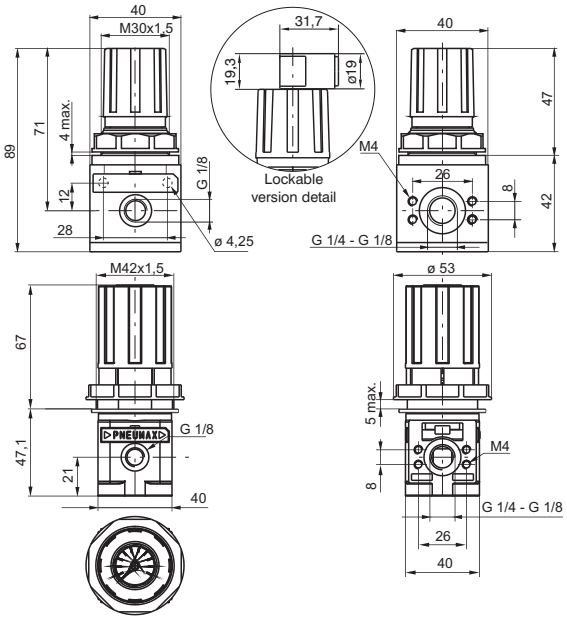

Ordering code

170Ⓣ2Ⓒ.Ⓖ.Ⓞ

Ⓣ	TYPE
	B = Standard regulator
	M = Manifold press. reg. c/w manometer
Ⓒ	CONNECTIONS
	A = G 1/8"
	B = G 1/4"
Ⓖ	ADJUSTING RANGE
	A = 0 - 2 bar
	B = 0 - 4 bar
	C = 0 - 8 bar
	D = 0 - 12 bar
Ⓞ	OPTION
	Standard regulator TYPE "B" (without options)
	K = Version with padlock (available only for Standard version TYPE "B")

Example: 170B2A.C
Standard manifold pressure regulator with connections G1/8" and adjusting range 0-8 bar.

Flow rate curves

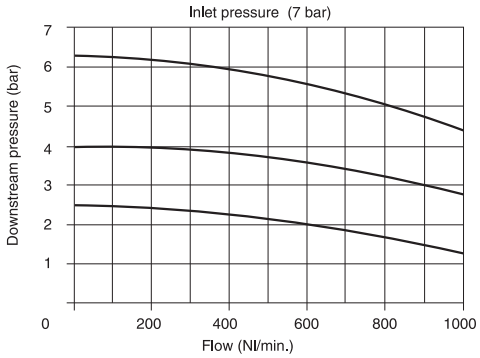

Adjustment characteristics

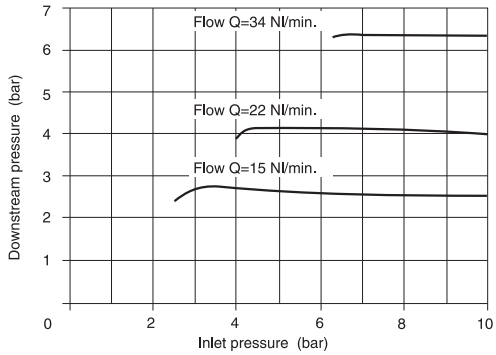

Operational characteristic

- Pneumax modular regulators have a common inlet for the whole manifold joined by a bayonet system.
- Alternatively to standard version it is also possible to use regulators with manometer included.
- This solution allows space savings on machine and avoids further pneumatic connections among regulators and manometers.

Technical characteristic

Connections	G 1/8" - G 1/4"
Max working pressure (bar)	13 bar - 1,3 MPa
Temperature °C	50°C
Pressure gauge connections	G 1/8"
Weight with technopolymer body	gr. 235
Weight with zinc alloy body	gr. 380
Pressure range (bar)	0 - 2 / 0 - 4 / 0 - 8 / 0 - 12
Assembly position	Any
Wall fixing screw	M4
Max. fittings torque	25 Nm

Manifold pressure regulators

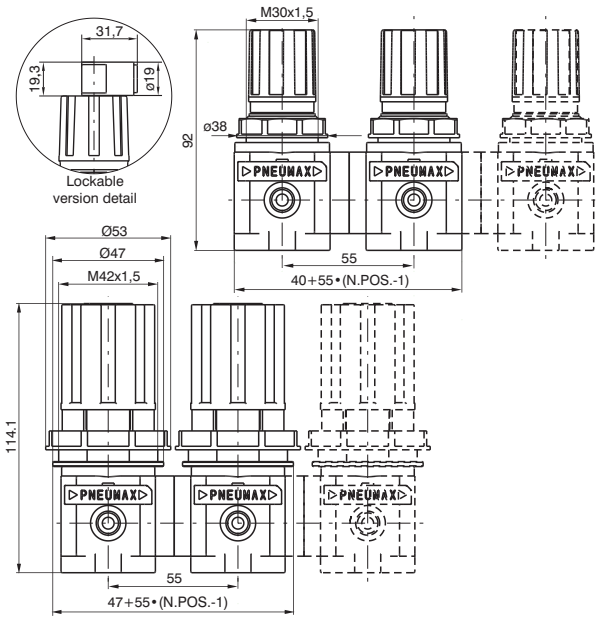

Ordering code

17BⓉ2Ⓒ.Ⓝ.Ⓖ.Ⓞ

Ⓣ	TYPE
	B = Standard regulator
	M = vers. manometer included
Ⓒ	CONNECTIONS
	A = G 1/8"
	B = G 1/4"
Ⓝ	POSITIONS N.
	2 = 2 regulators
	3 = 3 regulators
	4 = 4 regulators
	5 = 5 regulators
	6 = 6 regulators
Ⓖ	ADJUSTING RANGE
	A = 0 - 2 bar
	B = 0 - 4 bar
	C = 0 - 8 bar
	D = 0 - 12 bar
Ⓞ	OPTION
	Standard regulator TYPE "B" (without options)
	K = Version with padlock (available only for Standard version TYPE "B")

Note: a special kit between pressure regulators is necessary for manifold mounting.
Therefore regulators and kits must be ordered in same quantity less one kit.
Code 170M6, see accessories page.

Flow rate curves

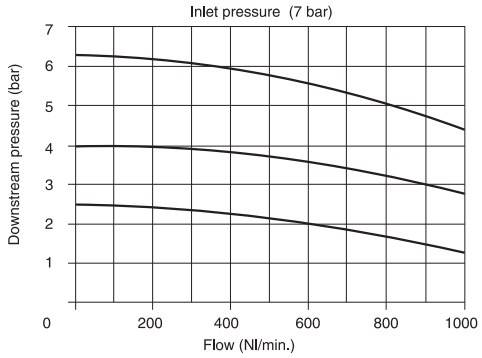

Adjustment characteristics

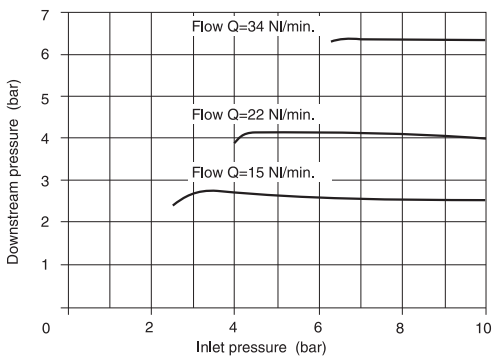

Operational characteristic

- Pneumax modular regulators have a common inlet for the whole manifold joined by a bayonet system.
- Alternatively to standard version it is also possible to use regulators with manometer included.
- This solution allows space savings on machine and avoids further pneumatic connections among regulators and manometers.

Technical characteristic

Connections	G 1/8" - G 1/4"
Max working pressure (bar)	13 bar - 1,3 MPa
Temperature °C	50°C
Pressure gauge connections	G 1/8"
Weight	gr. 235
Weight	gr. 380
Pressure range (bar)	0 - 2 / 0 - 4 / 0 - 8 / 0 - 12
Assembly position	Any
Wall fixing screw	M4
Max. fittings torque	25 Nm

Lubricator

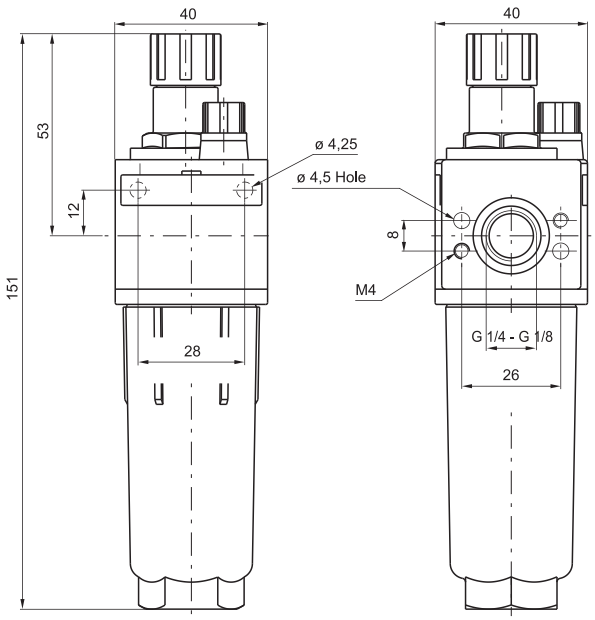

Ordering code

17Ⓥ03Ⓒ.Ⓣ

Ⓥ	VERSION
	0 = Zinc alloy body
	1 = Technopolymer body
Ⓒ	CONNECTIONS
	A = G 1/8"
	B = G 1/4"
Ⓣ	TYPE
	P = Bowl protection

Example: 17103A.P
Lubricator size 1 with G 1/8" connections and bowl protection with technopolymer body.

Flow rate curves

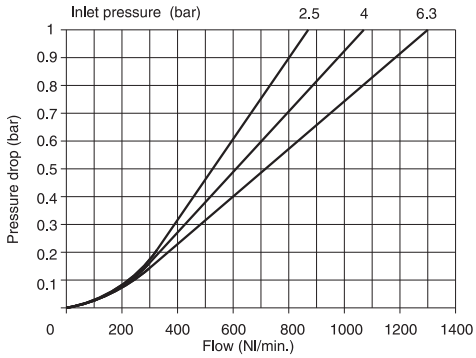

Operational characteristic

- Fog type lubrication with variable section orifice according to the flow.
- Zinc alloy body or reinforced technopolymer body with threaded aluminum insert connections.
- Wall mounting possibility with M4 screws protected by covers.
- Transparent technopolymer bowl screwed to the body.
- Technopolymer shock resistant bowl protection.
- Possibility to see the min. and max. oil level on 360° also with bowl protection assembled.
- Transparent technopolymer sight dome with adjusting handle.
- Oil filling plug (Available only for technopolymer body versions).

Technical characteristic

Connections	G 1/8" - G 1/4"
Max working pressure (bar)	13 bar - 1,3 MPa
Temperature °C	50°C
Weight with technopolymer body	gr. 108
Weight with zinc alloy body	gr. 258
Indicative oil drop rate	1 drop every 300/600 Nl
Oil type	FD22 - HG32
Bowl capacity	36 cm³
Assembly position	Vertical
Wall fixing screw	M4
Max. fittings torque on zinc alloy body	30 Nm
Max. fittings torque on technopolymer body	15 Nm
Min. operational flow at 6,3 bar	10 Nl/min.

Filter - pressure regulator

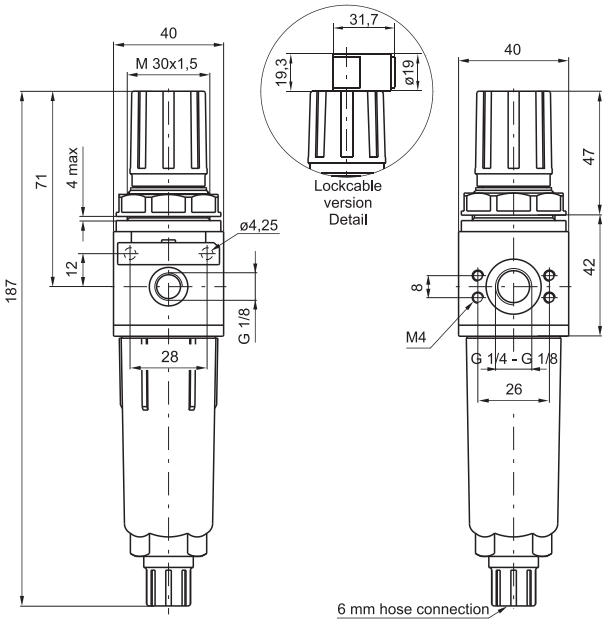

Ordering code

17Ⓥ04Ⓒ.Ⓢ.Ⓖ.Ⓣ.Ⓞ

Ⓥ	VERSION
	0 = Zinc alloy body
	1 = Technopolymer body
Ⓒ	CONNECTIONS
	A = G 1/8"
	B = G 1/4"
Ⓢ	FILTER PORE SIZE
	A = 5μ
	B = 20μ
	C = 50μ
Ⓖ	ADJUSTING RANGE
	A = 0 - 2 bar
	B = 0 - 4 bar
	C = 0 - 8 bar
	D = 0 - 12 bar
Ⓣ	TYPE
	P = Bowl protection
	S = Automatic drain
	PS = Bowl protection and Automatic drain
Ⓞ	OPTION
	=Standard (without options)
	K = Version with padlock

Example: 17104A.B.C.P
Filter - pressure regulator size 1 with G 1/8" connections, filter pore 20μ adjusting range 0 - 8 bar and bowl protection with technopolymer body.

Flow rate curves

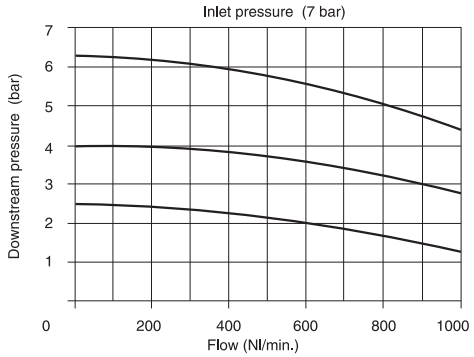

Adjustment characteristics

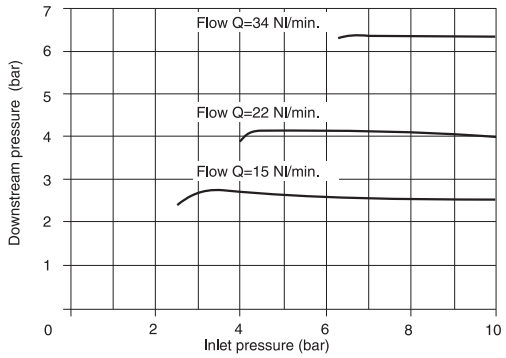

Operational characteristic

- Filter - diaphragm pressure regulator with relieving.
- Balanced poppet.
- Double filtering action: by air centrifuging and by replaceable and reusable HDPE porous filter element.
- Zinc alloy body or reinforced Technopolymer body with threaded aluminium insert connections.
- Wall mounting possibility with M4 screws protected by covers.
- Handle lockable in the desired position by simply pressing it downwards.
- Transparent technopolymer bowl screwed to the body.
- Technopolymer shock resistant bowl protection.
- Manual and semi-automatic water drain valve; in the semi-automatic version the drainage happens when there is no pressure or by pushing the valve up-wards.
- Possibility to see the water level on 360° also with bowl protection assembled.
- Two pressure gauge connections with plug complete of seal.
- Panel mounting bracket.
- Automatic water drainage bowl available on request.

Technical characteristic

Connections	G 1/8" - G 1/4"
Max working pressure (bar)	13 bar - 1,3 MPa
Minimum working pressure with automatic drain (bar)	0,5
Maximum working pressure with automatic drain (bar)	10
Temperature °C	50°C
Pressure gauge connections	G 1/8"
Weight with technopolymer body	gr. 180
Weight with zinc alloy body	gr. 295
Pressure range (bar)	0 - 2 / 0 - 4 / 0 - 8 / 0 - 12
Filter pore size	5μ - 20μ - 50μ
Bowl capacity	20 cm^3
Assembly position	Vertical
Wall fixing screw	M4
Max. fittings torque on zinc alloy body	30 Nm
Max. fittings torque on technopolymer body	15 Nm

Progressive start-up valve

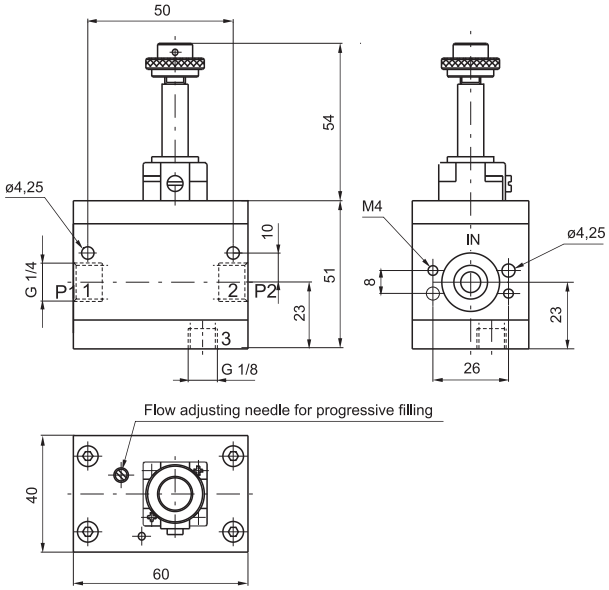

Ordering code

171Ⓣ

Ⓣ	TYPE
	10.M2 = Electric control complete wih M2 mechanic (see pag. 2.15)
	20 = with pneumatic control

Important note: the preventive or programmed maintenance of this product is not foreseen considering the elaborated assembling and the specific "PNEUMAX" testing; therefore, call the producer or its representative in case of necessity.

Operational characteristic

- 3 way valve with double poppet.
- Possibility to adjust the down stream circuit filling time by the enclosed adjustable metering screw.
- Quick down stream circuit discharge.
- Possibility for a pneumatic or electric piloting control.
- Body made with anodized 2011 aluminum alloy.
- Wall mounting possibility with M4 screws.

Technical characteristic

Connections	G 1/8" - G 1/4"
Max working pressure (bar)	10 bar - 1 MPa
Temperature °C	50°C
Weight	gr. 365
Assembly position	Any
Min. operating pressure	2,5 bar - 0,25 MPa
Nominal flow at 6 bar with Δp=1	1000 Nl/min.
Flow with adjustable metering screw fully open	150 Nl/min.
Wall fixing screw	M4

Shut-off valve

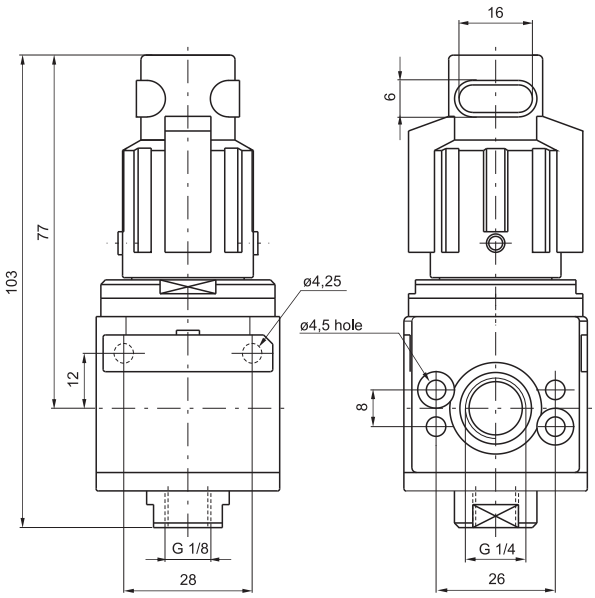

Ordering code

17Ⓥ30.Ⓣ

Ⓥ	VERSION
	0 = Zinc alloy body
	1 = Technopolymer body
Ⓣ	TYPE
	A = Not lockable handle
	B = Lockable handle

Example: 17130.B : Shut-off valve size 1 complete with lockable handle with technopolymer body.
Important note: the preventive or programmed maintenance of this product is not foreseen considering the elaborated assembling and the specific "PNEUMAX" testing; therefore, call the producer or its representative in case of necessity.

Operational characteristic

- 3 ways poppet valve.
- Zinc alloy body or reinforced technopolymer body with threaded aluminium insert connections.
- Double handle action for valve opening: pushing and rotating (clockwise).
- Simply rotate the valve handle counter clockwise for valve closing and down stream circuit discharging.
- Possibility to lock the valve in the discharging position by fitting in a padlock in the proper seat.
- Wall mounting possibility with M4 screws protected by covers.

Technical characteristic

Connections	G 1/8" - G 1/4"
Max working pressure (bar)	10 bar - 1,3 MPa
Temperature °C	50°C
Weight with technopolymer body	gr. 155
Weight with zinc alloy body	gr. 280
Assembly position	Any
Wall fixing screw	M4
Handle opening and closing angle	90°
Max. fittings torque on zinc alloy body	30 Nm
Max. fittings torque on technopolymer body	15 Nm

Electrically operated shut-off valve

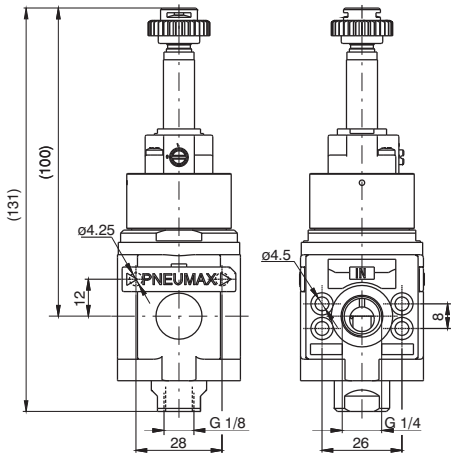

Ordering code

17Ⓥ30.Ⓣ

Ⓥ	VERSION
	0 = Zinc alloy body
	1 = Technopolymer body
Ⓣ	TYPE
	M2 = Electric with M2
	M2/9 = Electric with M2/9

Example: 17130.M2 : Shut-off valve size 1 with electric control complete wih M2 mechanic.
Important note: the preventive or programmed maintenance of this product is not foreseen considering the elaborated assembling and the specific "PNEUMAX" testing; therefore, call the producer or its representative in case of necessity.

Operational characteristic

- 3 ways poppet valve, electric control.
- Zinc alloy body or reinforced technopolymer body with threaded aluminium insert connections.
- Opening and closing of the valve via solenoid operator.
- The correct flow direction is indicated by the arrows stamped on the valve body.
- The supply pressure must be minimum 2 bars or higher for the solenoid operated version.
- The piloting pressure must be minimum 2bar or higher for the pneumatic operated version.(inlet pressure can be lower than 2 bar).
- It is possible to produce the external supplied solenoid version by mounting the 305.10.05 between the valve main body and the solenoid pilot valve.
- The air supply can only be done via port 1.
- Ensure that the downstream air consumption will not cause a pressure drop which could result in the pressure falling below the minimum operating values. If the pressure inside the valve falls below 2 bars , the valve might shut off.
- Wall mounting possibility with M4 screws protected by covers.

Technical characteristic

Inlet connections	G 1/4"
Exhaust connections	G 1/8"
Temperature °C	-5 °C - 50°C
Weight with technopolymer body	gr. 215
Weight with zinc alloy body	gr. 345
Assembly position	Any
Wall fixing screw	M4
Max. fittings torque	15 Nm
Min. working pressure	2 bar
Max working pressure (bar)	13 bar
Flow rate at 6 bar with Δp=1	1000 Nl/min

Pneumatically operated shut-off valve

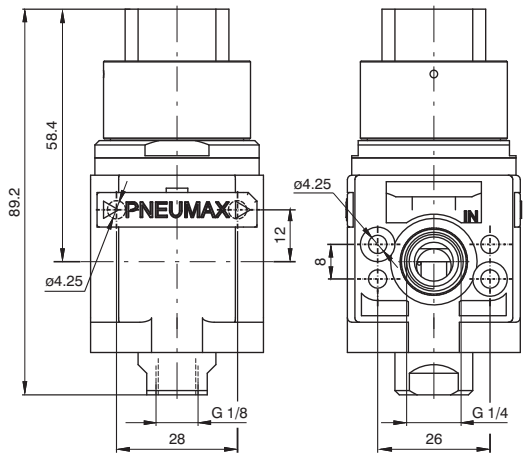

Ordering code

17Ⓥ30.PN

Ⓥ	VERSION
	0 = Zinc alloy body
	1 = Technopolymer body

Example: 17130.PN : Shut-off valve size 1 with pneumatic pilot.
Important note: the preventive or programmed maintenance of this product is not foreseen considering the elaborated assembling and the specific "PNEUMAX" testing; therefore, call the producer or its representative in case of necessity.

Operational characteristic

- 3 ways poppet valve, pneumatic pilot.
- Zinc alloy body or reinforced technopolymer body with threaded aluminium insert connections.
- Opening and closing of the valve via pneumatic operator
- The correct flow direction is indicated by the arrows stamped on the valve body.
- The supply pressure must be minimum 2 bars or higher for the solenoid operated version.
- The piloting pressure must be minimum 2bar or higher for the pneumatic operated version.(inlet pressure can be lower than 2 bar).
- It is possible to produce the external supplied solenoid version by mounting the 305.10.05 between the valve main body and the solenoid pilot valve.
- The air supply can only be done via port 1.
- Ensure that the downstream air consumption will not cause a pressure drop which could result in the pressure falling below the minimum operating values. If the pressure inside the valve falls below 2 bars , the valve might shut off.
- Wall mounting possibility with M4 screws protected by covers.

Technical characteristic

Piloting connections	G 1/8"
Temperature °C	-5 - + 50
Weight with technopolymer body	gr. 180
Weight with zinc alloy body	gr. 310
Assembly position	Any
Wall fixing screw	M4
Max. fittings torque	15 Nm
Min. working pressure	2 bar
Max working pressure (bar)	13 bar
Piloting pressure	2 bar
Flow rate at 6 bar with Δp=1	1000 Nl/min

Filter pressure regulator + Lubricator

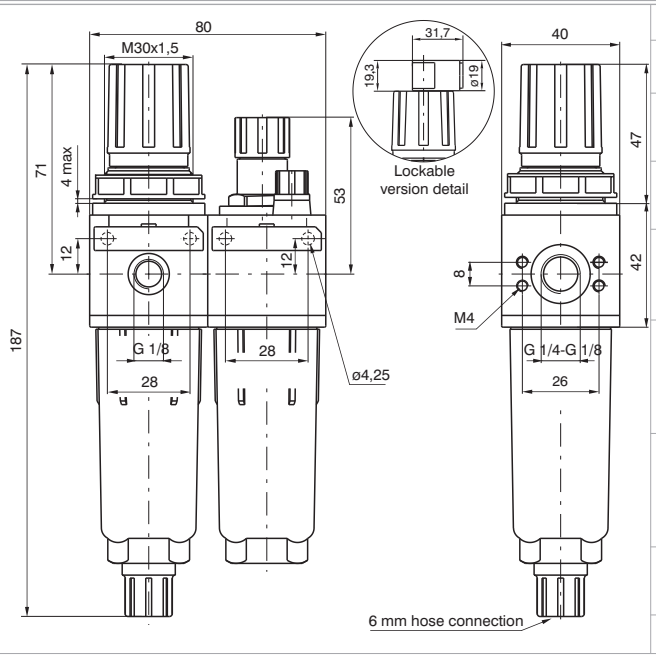

Ordering code

17Ⓥ06Ⓒ.Ⓢ.Ⓖ.Ⓣ.Ⓞ

Ⓥ	VERSION
	0 = Zinc alloy body
	1 = Technopolymer body
Ⓒ	CONNECTIONS
	A = G 1/8"
	B = G 1/4"
Ⓢ	FILTER PORE SIZE
	A = 5μ
	B = 20μ
	C = 50μ
Ⓖ	ADJUSTING RANGE
	A = 0 - 2 bar
	B = 0 - 4 bar
	C = 0 - 8 bar
	D = 0 - 12 bar
Ⓣ	TYPE
	P = Bowl protection
	S = Automatic drain
	PS = Bowl protection and Automatic drain
Ⓞ	OPTION
	=Standard (without options)
	K = Version with padlock

Example: 17106A.B.C.P
Service unit combination complete with filter - pressure regulator and lubricator size 1 G 1/8" connections, filter pore size 20μ, adjusting range 0-8 bar and bowl protections with technopolymer body.

Flow rate curves

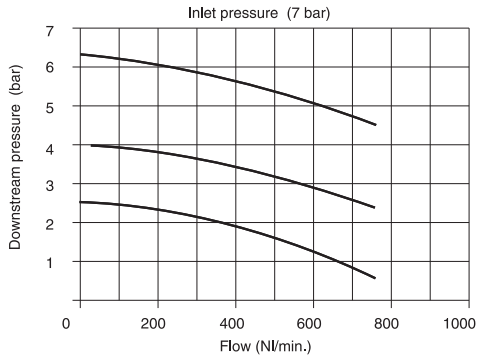

Adjustment characteristics

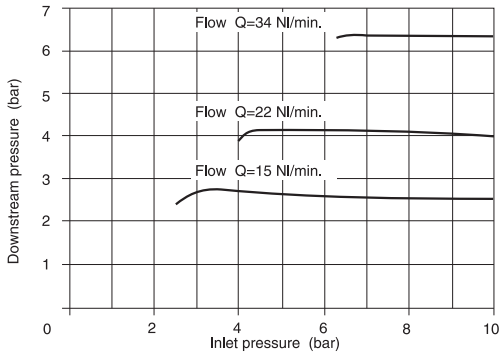

Operational characteristic

- Filter - diaphragm pressure regulator with relieving.
- Balanced poppet.
- Double filtering action: by air centrifuging and by replaceable and reusable HDPE porous filter element.
- Zinc alloy body reinforced technopolymer body with threaded aluminum insert connections
- Wall mounting possibility with M4 screws protected by covers.
- Lockable handle by simply pressing it downwards in the desired position.
- Transparent technopolymer bowls screwed to the body.
- Shock resistant bowl technopolymer protections.
- Manual and semi-automatic water drain valve; in the semi-automatic version the drainage happens when there is no pressure or by pushing the valve up-wards.
- Possibility to see the water level on 360° also with bowl protection assembled.
- Two pressure gauge connections with plug complete of seal.
- Panel mounting bracket.
- Automatic water drainage bowl available on request.
- Fog type lubrication with variable section orifice according to the flow.
- Possibility to see the min. and max. oil level on 360° also with bowl protection assembled.
- Transparent technopolymer sight dome with adjusting handle.
- Oil filling plug.

Technical characteristic

Connections	G 1/8" - G 1/4"
Max working pressure (bar)	13 bar - 1,3 MPa
Temperature °C	50°C
Pressure gauge connections	G 1/8"
Weight with technopolymer body	gr. 295
Weight with zinc alloy body	gr. 560
Pressure range (bar)	0 - 2 / 0 - 4 / 0 - 8 / 0 - 12
Filter pore size	5μ - 20μ - 50μ
Bowl capacity	20 cm³
Indicative oil drop rate	1 drop every 300/600 Nl
Oil type	FD22 - HG32
Bowl capacity	36 cm³
Assembly position	Vertical
Wall fixing screw	M4
Max. fittings torque on zinc alloy body	30 Nm
Max. fittings torque on technopolymer body	15 Nm
Min. operational flow at 6,3 bar	10 Nl/min.

Filter + Pressure regulator + Lubricator

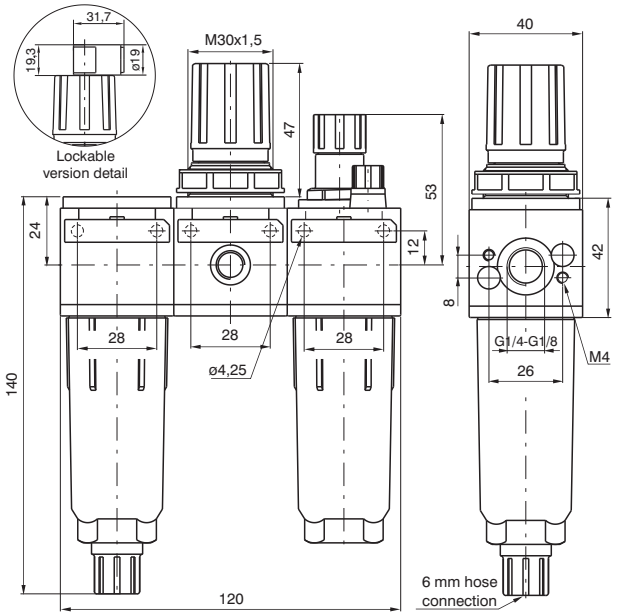

Ordering code

17Ⓥ07Ⓒ.Ⓢ.Ⓖ.Ⓣ.Ⓞ

Ⓥ	VERSION
	0 = Zinc alloy body
	1 = Technopolymer body
Ⓒ	CONNECTIONS
	A = G 1/8"
	B = G 1/4"
Ⓢ	FILTER PORE SIZE
	A = 5μ
	B = 20μ
	C = 50μ
Ⓖ	ADJUSTING RANGE
	A = 0 - 2 bar
	B = 0 - 4 bar
	C = 0 - 8 bar
	D = 0 - 12 bar
Ⓣ	TYPE
	P = Bowl protection
	S = Automatic drain
	PS = Bowl protection and Automatic drain
Ⓞ	OPTION
	=Standard (without options)
	K = Version with padlock

Example: 17107A.B.C.P
Service unit combination complete with filter - pressure regulator and lubricator size 1 G 1/8" connections, filter pore size 20μ, adjusting range 0-8 bar and bowl protections with technopolymer body.

Flow rate curves

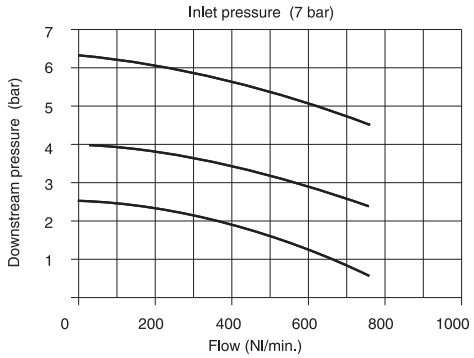

Adjustment characteristics

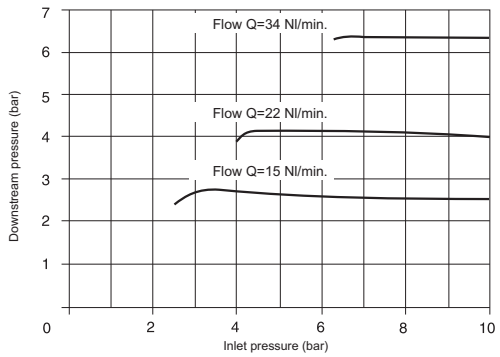

Operational characteristic

- Zinc alloy body or reinforced technopolymer body with threaded aluminum insert connections.
- Wall mounting possibility with M4 screws protected by covers.
- Transparent technopolymer bowls screwed to the body.
- Shock resistant bowl technopolymer protections.
- Double filtering action: by air centrifuging and by replaceable and reusable HDPE porous filter element.
- Manual and semi-automatic water drain valve; in the semi-automatic version the drainage happens when there is no pressure or by pushing the valve up-wards.
- Possibility to see the water level on 360° also with bowl protection assembled.
- Diaphragm pressure regulator with relieving and balanced poppet.
- Pressure adjusting lockable handle by simply pressing it downwards in the desired position.
- Two pressure gauge connections with plug complete of seal.
- Panel mounting bracket.
- Automatic water drainage bowl available on request.
- Fog type lubrication with variable section orifice according to the flow.
- Possibility to see the min. and max. oil level on 360° also with bowl protection assembled.
- Transparent technopolymer sight dome with adjusting handle.
- Oil filling plug.

Technical characteristic

Connections	G 1/8" - G 1/4"
Max working pressure (bar)	13 bar - 1,3 MPa
Temperature °C	50°C
Pressure gauge connections	G 1/8"
Weight with technopolymer body	gr. 375
Weight with zinc alloy body	gr. 755
Pressure range (bar)	0 - 2 / 0 - 4 / 0 - 8 / 0 - 12
Filter pore size	5μ - 20μ - 50μ
Bowl capacity	20 cm³
Indicative oil drop rate	1 drop every 300/600 Nl
Oil type	FD22 - HG32
Bowl capacity	36 cm³
Assembly position	Vertical
Wall fixing screw	M4
Max. fittings torque on zinc alloy body	30 Nm
Max. fittings torque on technopolymer body	15 Nm
Min. operational flow at 6,3 bar	10 Nl/min.

High sensitive air pressure regulator with high flow rate relieving

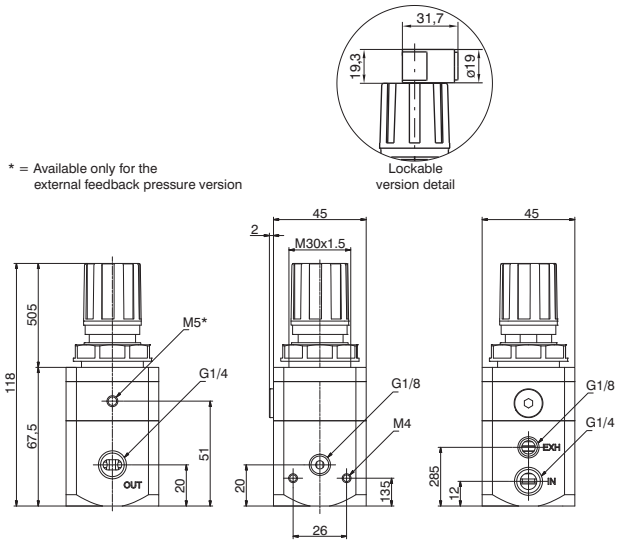

Ordering code

171S2B.Ⓖ.Ⓣ.Ⓞ

Ⓖ	ADJUSTING RANGE
	0002 = 0,1 - 2 bar
	0004 = 0,1 - 4 bar
	0007 = 0 ,1- 7 bar
	0010 = 0 ,1- 10 bar
Ⓣ	TYPE
	=Standard (without options)
	E=External pressure feedback
Ⓞ	OPTION
	=Standard (without options)
	K = Version with padlock

Example: 17112B.C
Pressure regulator with G 1/4" 0,1 - 7 bar

Flow rate curves

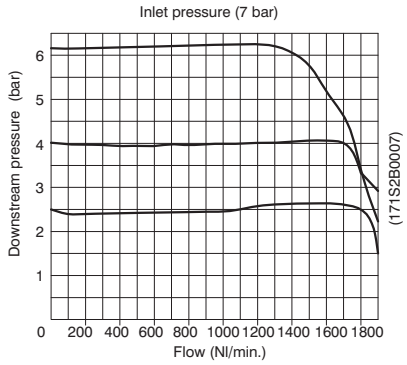

Adjustment characteristics

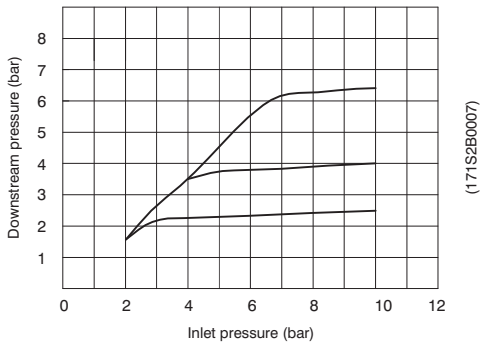

Exhaust flow rate curves

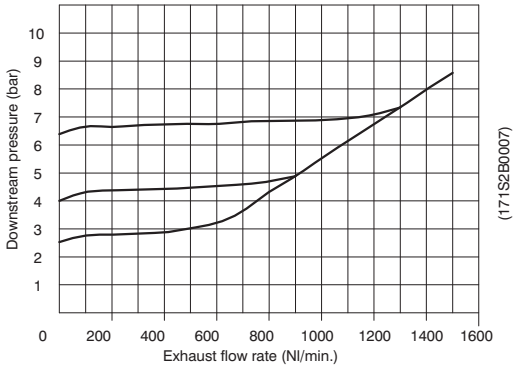

Operational characteristic

- Accurate capacity to maintain set pressure.
- Sensitivity combined with high relieving rates.
- High flow rate with extremely low pressure drop.
- Pressure adjusting lockable handle by simply pressing it donwards in the desired position.
- Body made with anodized zoll aluminium alloy
- Two pressure gauge connections with plug complete of seal.
- Ring nut for panel mounting.
- Once set, a constant bleed of air maintains the accuracy of the regulator.
- This controlled release is a characteristic, not a fault.

Technical characteristic

Connections	G 1/4"
Max working pressure (bar)	10 bar - 1 MPa
Temperature °C	50°C
Pressure gauge connections	G 1/8"
Weight	gr. 380
Pressure range (bar)	0,1 - 2 bar / 0,1 - 4 bar 0,1 - 7 bar
Assembly position	Any
Air flow (inlet pressure 10 bar)	5 Nl/min
Max. fittings torque	25 Nm
Fluid	20μ filtered air and preferably non lubricated
Mounting holes diameter for panel mounting	30 mm

Pressure Switch complete with adapter

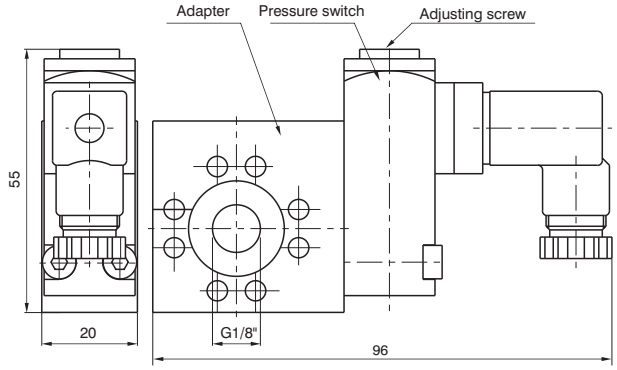

Ordering code

17T

	TYPE
T	14A = Pressure switch adapter
	14B = Pressure switch
	14C = Pressure switch complete with adapter

Example: 1714C
Pressure switch complete with adapter.

Connection

1 = Neutral
2 = N.C contact
3 = N.O contact

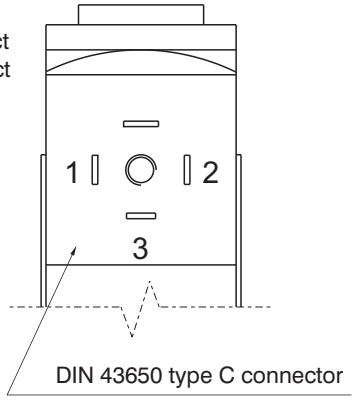

Operational characteristic

- The pressure switch complete with adapter has to be assembled between two elements of the FRL group. It cannot be utilized separately or at the end of the FRL group.
- The pressure switch can be set at desired pressure (Pressure range (bar) from 2 to 10 bar) by rotating the adjusting screw.
- The electrical connection is made by mean of a 15 mm connector DIN 43650 type C.
- The microswitch contact could be Normally Closed or open (change over switch).

Technical characteristic

Max working pressure (bar)	13 bar - 1,3 MPa
Temperature °C	50°C
Weight	gr. 160
Microswitch capacity	1A
Microswitch Maximum voltage	250 VAC
Grade of protection (with connector assembled)	IP 65
Adjusting range	2 - 10 bar
Assembly position	Any

Fixing bracket for pressure regulator

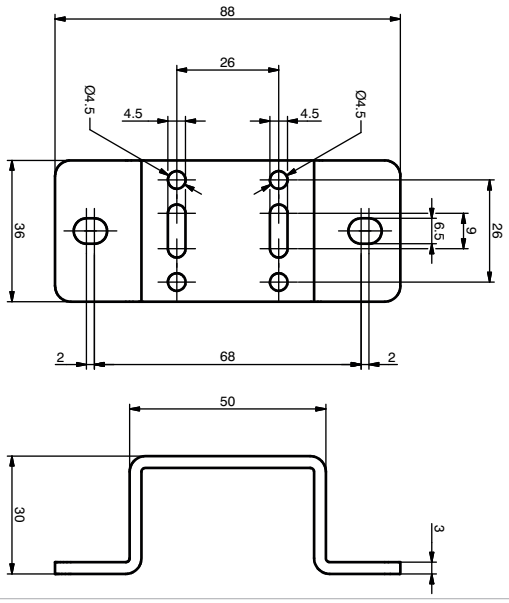

Ordering code

17050

Weight gr. 110

Air Intake

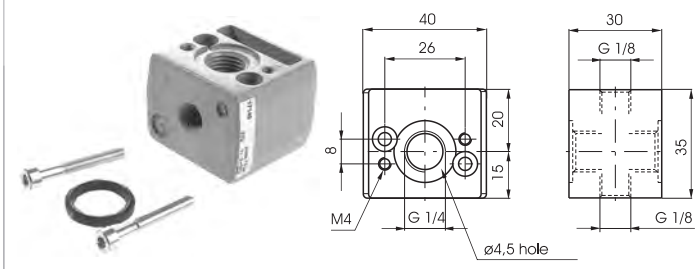

Ordering code
17140

Weight gr. 75

Air Intake - "H" profile

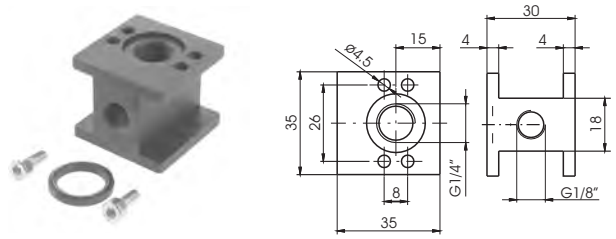

Ordering code
17140H

Weight gr. 50

Fixing bracket

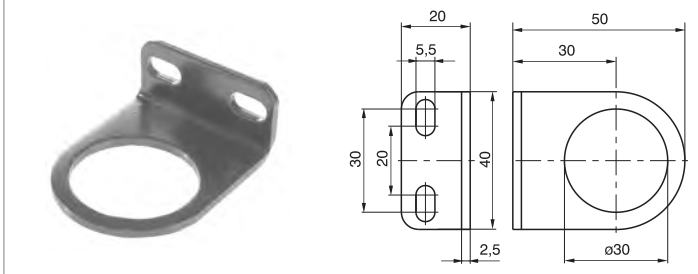

Ordering code
17150

Weight gr. 32

Fixing bracket

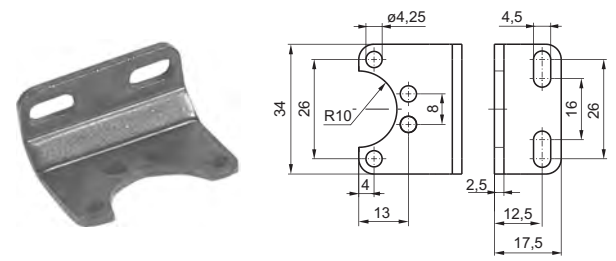

Ordering code
170M5

Weight gr. 20

Assembling kit

Ordering code
1716Ⓥ

Ⓥ	VERSION
	0 = Standard
	5 = for progressive start-up valve

Weight gr. 15

Weight gr. 15

Assembling kit for manifold regulators

Ordering code
170M6

Weight gr. 20

Weight gr. 20

Pressure gauge

Ordering code
17070Ⓥ.Ⓢ

Ⓥ	VERSION
	A = Dial ø40
	B = Dial ø50
Ⓢ	SCALE
	A = Scale 0-4 bar
	B = Scale 0-6 bar
	C = Scale 0-12 bar

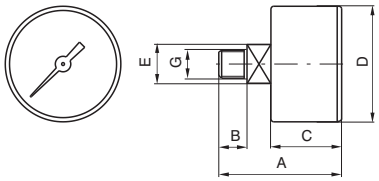

DIMENSIONS

CODE	A	B	C	D	E	G	Weight gr.
17070A	44	10	26	41	14	1/8"	60
17070B	45	10	27	49	14	1/8"	80

Manometer diameter D.23 mm

Ordering code
17070M.Ⓢ

Ⓢ	SCALE
	A = Scale 0-4 bar
	B = Scale 0-6 bar
	C = Scale 0-12 bar

Weight gr. 20

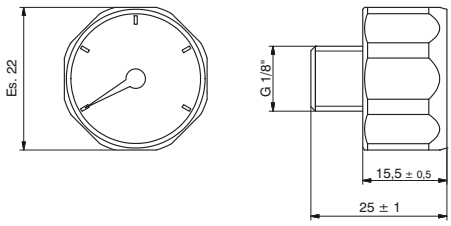

Construction and working characteristics

The modular air service units groups size 2, as the ones of size 1, allow a wide selection of combinations.
The threaded connections are machined directly on the valve body made with light alloy, so that each components can be used individually.
They can be wall mounted with head-guard screws masked by covers.
The bowls are made of transparent technopolymer, always supplied with shock resistant technopolymer protection, allowing the moisture and oil level control from any angle.
The filter can be equipped with manual or semiautomatic water drain valve; furthermore it's possible to install the automatic draining device inside the bowl.
The pressure regulator handle is lockable in the desired position.
The lubricator oil flow is adjustable with proper handle and it is visibly checked through the sight dome.
The shut-off valve can be equipped with pad-lock to prevent accidents or damages due to unauthorized operation.
The progressive start-up valve, pneumatically or electropneumatically controlled, allows air supply to the circuit progressively and with adjustable time.
Some accessories like the wall fixing bracket, pressure gauges with different scales and diameters, air intake block that assembled between the elements allows to get in the system filtered or filtered non-lubricated air, are completing the range.

Instruction for installation and operation

Pay attention to install a group or a single component with air flow direction according to the arrows and to the following sequence: filter, pressure regulator, lubricator and with bowls downwards. It's possible to fix the group to the wall by removing the covers, which can be installed again for covering the screw after fixing.
Do not exceed the recommended torque while assembling the connectors.
Do not exceed the recommended air pressure and temperature limits.
The moisture should not exceed the level marked on the bowl and it can be drawn off and carried away by a flexible tube of Ø 6/4 directly connected to the discharge valve handle.
The pressure should be set from minimum to maximum, rotating the adjusting handle clockwise.
As lubricant, we suggest to use oil class FD22 or HG32. Verify that the lubricator is not fed with a flow lower than the minimum operational.
To set the oil flow rotate the proper adjusting handle in order to get one drop of oil every 300-600 liters of air.
The oil flow will be kept automatically and proportionally to the air flow.
The oil can be refilled by mean of proper plug or directly into the bowl after having de-pressurized the system. Do not exceed the maximum level indicated on the bowl.
For opening the shut-off valve push and rotate clockwise the operating handle. For closing it and consequently discharging the down stream line, rotate the handle counter-clockwise.

Manutenzione

Clean the bowls with water and detergent. Do not use alcohol.
The filter element made with HPDE is reusable by blowing and cleaning it with proper detergent. For replacing or cleaning it, remove the bowl and unscrew the baffle spins.
Replace the pressure regulator diaphragm whenever the operation is not correct or there is a continuous air leaking through the relieving (over pressure discharge); reinstall the adjusting mechanism support locking it with about 8 Nm torque.
In case it is necessary to replace the lubricator transparent dome, tight it at 5 Nm torque maximum.

Assembling

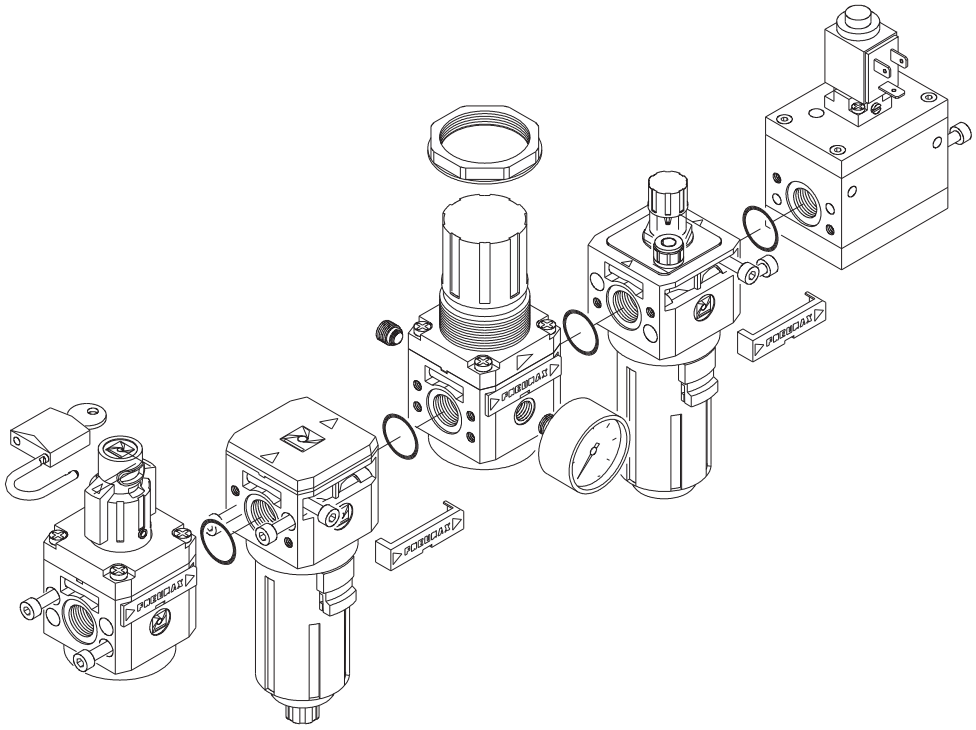

Filter

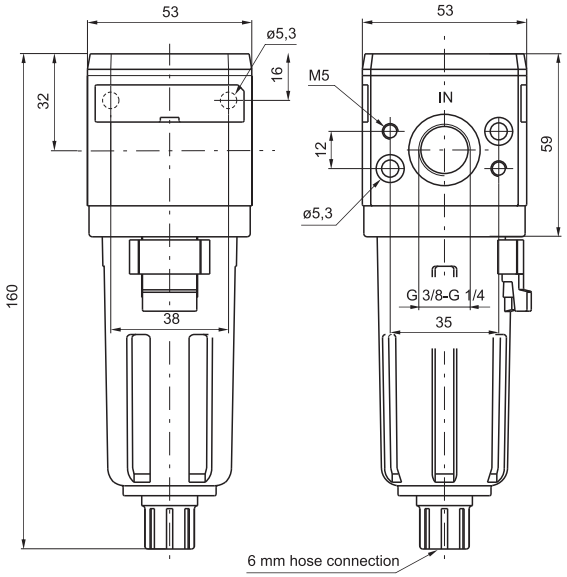

Ordering code

17201Ⓒ.Ⓢ.Ⓣ

Ⓒ	CONNECTIONS
	A = G 1/4"
	B = G 3/8"
Ⓢ	FILTER PORE SIZE
	A = 5μ
	B = 20μ
	C = 50μ
Ⓣ	TYPE
	S = Automatic drain

Example: 17201A.B
Filter size 2 with G 1/4" connections and filter pore size 20μ.

Flow rate curves

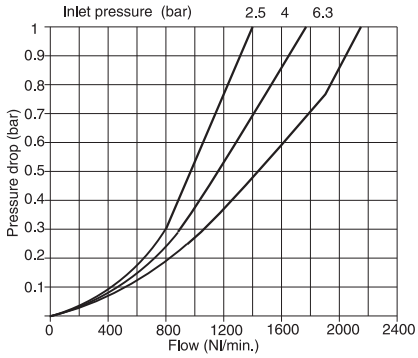

Operational characteristic

- Body made with light alloy.
- Wall mounting possibility with M5 screws protected by covers.
- Double filtering action : by air centrifuging and by replaceable and reusable HDPE porous filter element.
- Transparent technopolymer bowl with shock resistant technopolymer protection connected to the body with bayonet cap and safety button.
- Manual and semi-automatic water drain valve; in the semi-automatic version the drainage happens when there is no pressure or by pushing the valve up-wards.
- Possibility to see the water level on 360°.
- Automatic water drainage bowl available on request.

Technical characteristic

Connections	G 1/4" - G 3/8"
Max working pressure (bar)	13 bar - 1,3 MPa
Minimum working pressure with automatic drain (bar)	0,5
Maximum working pressure with automatic drain (bar)	10
Temperature °C	50°C
Weight	gr. 255
Filter pore size	5μ - 20μ - 50μ
Bowl capacity	30 cm³
Assembly position	Vertical
Wall fixing screw	M5
Max. fittings torque	25 Nm

Coalescing filter

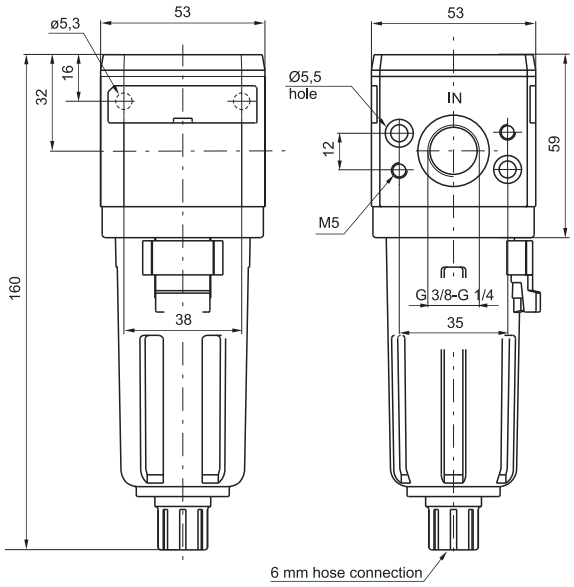

Ordering code

17208Ⓒ.Ⓔ.Ⓣ

Ⓒ	CONNECTIONS
	A = G 1/4"
	B = G 3/8"
Ⓔ	FILTER EFFICIENCY
	E = 99,97%
Ⓣ	TYPE
	S = Automatic drain

Example: 17208A.E
Coalescing filter size 2 with G 1/4" connections and filter efficiency of 99,97%.

Flow rate curves

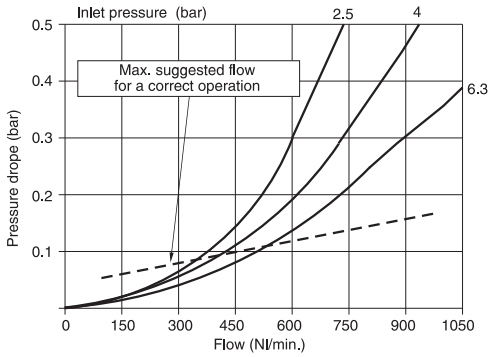

Operational characteristic

- Coalescing filter element remove 0,01μ particles equivalent to 99,97%.
- Body made with light alloy.
- Wall mounting possibility with M5 screw protected by covers.
- Transparent technopolymer bowl with shock resistant technopolymer protection connected to the body with bayonet cap and safety button.
- Manual and semi-automatic water drain valve; in the semi-automatic version the drainage happens when there is no pressure or by pushing the valve up-wards.
- Possibility to see the water level on 360° also with Bowl protection assembled.
- Automatic water drainage bowl available on request.

Technical characteristic

Connections	G 1/4" - G 3/8"
Max working pressure (bar)	13 bar - 1,3 MPa
Minimum working pressure with automatic drain (bar)	0,5
Maximum working pressure with automatic drain (bar)	10
Temperature °C	50°C
Weight	gr. 255
Filter efficiency with 0,01μ particle	99,97%
Bowl capacity	30 cm³
Assembly position	Vertical
Wall fixing screw	M5
Max. fittings torque	25 Nm

Pressure regulator

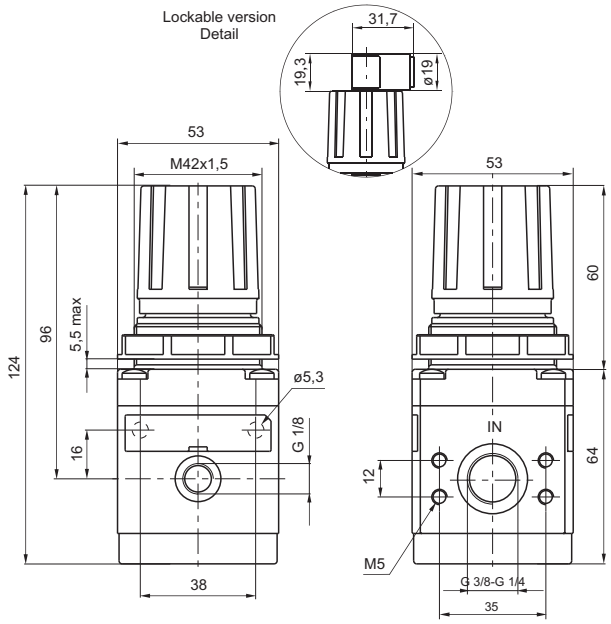

Ordering code

17202Ⓒ.Ⓖ.Ⓣ.Ⓞ

Ⓒ	CONNECTIONS
	A = G 1/4"
	B = G 3/8"
Ⓖ	ADJUSTING RANGE
	A = 0 - 2 bar
	B = 0 - 4 bar
	C = 0 - 8 bar
	D = 0 - 12 bar
Ⓣ	TYPE
	L = Without Relieving
	SM = improved Relieving
Ⓞ	OPTION
	*Standard
	K = Lockable version

* No additional letters required

Example: 17202A.C
Pressure regulator with G 1/4" connections, adjusting range 0 - 8 bar with relieving.

Flow rate curves

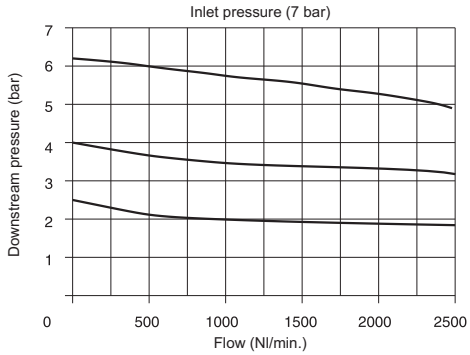

Adjustment characteristics

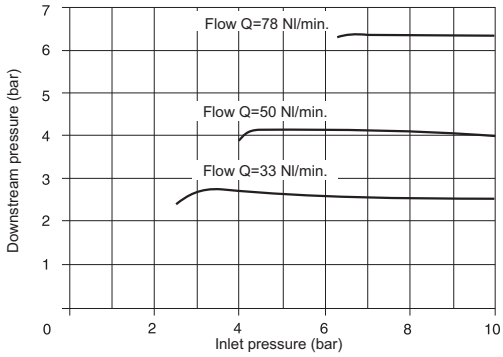

Operational characteristic

- Diaphragm pressure regulator with relieving.
- Balanced poppet.
- Lockable handle by simply pressing it downwards in the desired position.
- Body made with light alloy.
- Wall mounting possibility with M5 screws protected by covers.
- Two pressure gauge connections with plug complete of seal.
- Panel mounting bracket.

Technical characteristic

Connections	G 1/4" - G 3/8"
Max working pressure (bar)	13 bar - 1,3 MPa
Temperature °C	50°C
Pressure gauge connections	G 1/8"
Weight	gr. 390
Pressure range (bar)	0 - 2 / 0 - 4 / 0 - 8 / 0 - 12
Assembly position	Any
Wall fixing screw	M5
Max. fittings torque	25 Nm

Piloted pressure regulator

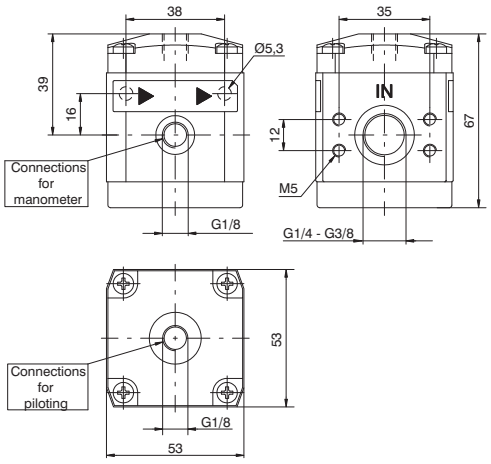

Ordering code

17202Ⓒ.P.Ⓣ

Ⓒ	CONNECTIONS
	A = G 1/4"
	B = G 3/8"
Ⓣ	TYPE
	*Standard version
	L = Without Relieving

* No additional letters required

Example: 17202A.P
Piloted pressure regulator with G 1/4" connections

Flow rate curves

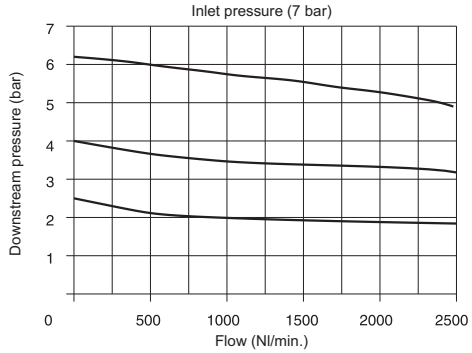

Adjustment characteristics

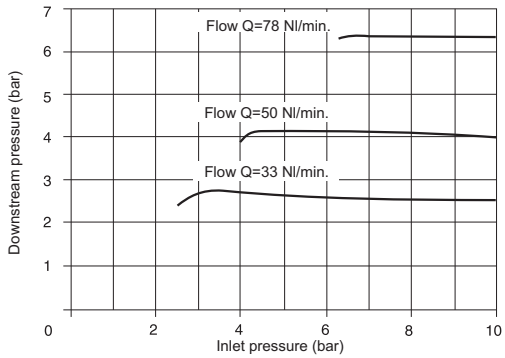

Adjustment characteristics

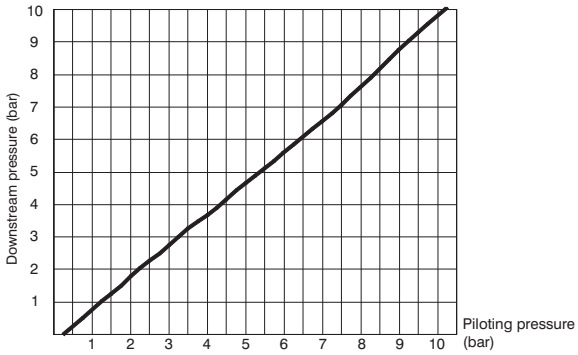

Operational characteristic

- Diaphragm pressure regulator with relieving.
- Balanced poppet.
- Body made with light alloy.
- Wall mounting possibility with M5 screws protected by covers.
- Two pressure gauge connections with plug complete of seal.
- Panel mounting bracket.

Technical characteristic

Connections	G 1/4" - G 3/8"
Max working pressure (bar)	13 bar - 1,3 MPa
Temperature °C	50°C
Assembly position	Any
Wall fixing screw	M5
Max. fittings torque	25 Nm
Weight	gr. 313

Pressure regulator including manometer

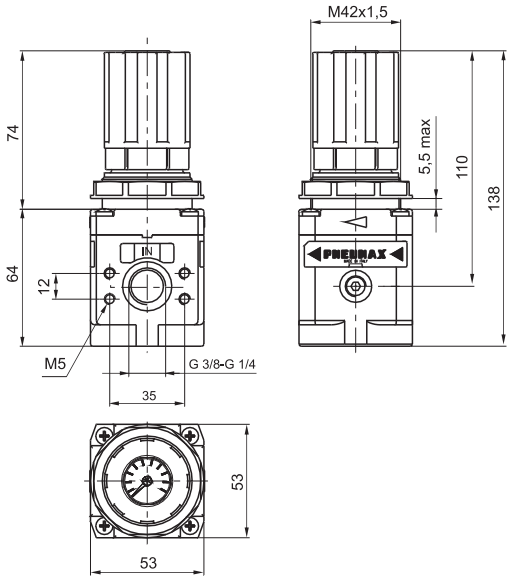

Ordering code

17222Ⓒ.Ⓖ

Ⓒ	CONNECTIONS
	A = G 1/4"
	B = G 3/8"
Ⓖ	ADJUSTING RANGE
	A = 0 - 2 bar
	B = 0 - 4 bar
	C = 0 - 8 bar
	D = 0 - 12 bar

Example: 17222A.C
Pressure regulator with G 1/4" connections, adjusting range 0 - 8 bar with relieving.

Flow rate curves

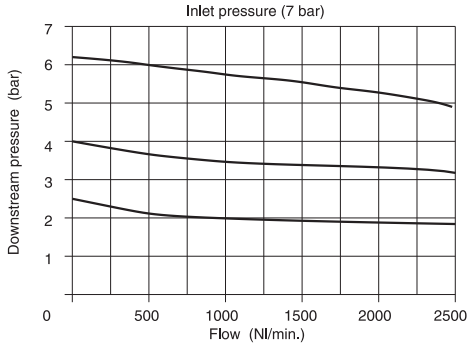

Adjustment characteristics

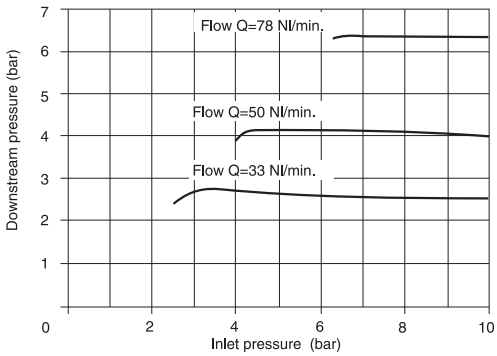

Operational characteristic

- Construction and working characteristics
- Diaphragm pressure regulator with relieving.
- Pressure gauge included on the top of adjusting knob.
- Balanced poppet.
- Lockable handle by simply pressing it downwards in the desired position.
- Body made with light alloy.
- Wall mounting possibility with M5 screws protected by covers.
- Panel mounting bracket.

Technical characteristic

Connections	G 1/4" - G 3/8"
Max working pressure (bar)	13 bar - 1,3 MPa
Temperature °C	50°C
Pressure gauge connections	G 1/8"
Weight	gr. 440
Pressure range (bar)	0 - 2 / 0 - 4 / 0 - 8 / 0 - 12
Assembly position	Any
Wall fixing screw	M5
Max. fittings torque	25 Nm

Lubricator

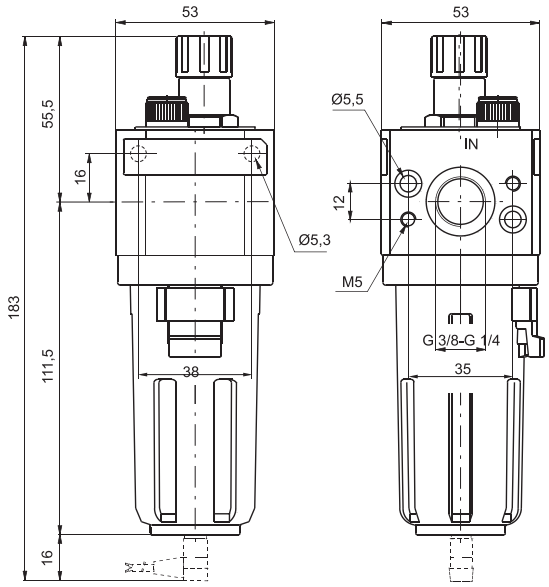

Ordering code

17203Ⓒ.Ⓣ

Ⓒ	CONNECTIONS
	A = G 1/4"
	B = G 3/8"
Ⓣ	TYPE
	MA = Min. oil level indicator N.O. with plug connector
	MC = Min. oil level indicator N.C. with plug connector

Example: 17203A : Lubricator with G 1/4" connections.
Note: on the MA version the contact is open when oil is present; on the MC version the contact is closed when oil is present

Flow rate curves

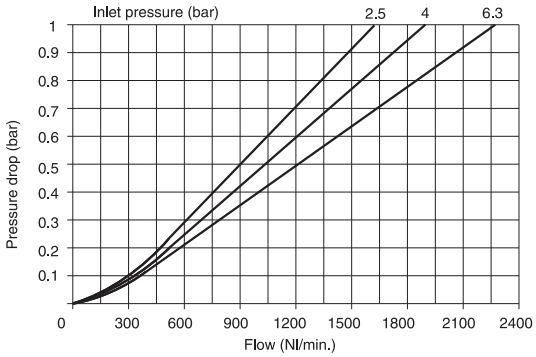

Operational characteristic

- Fog type lubrication with variable section orifice according to the flow.
- Body made with light alloy.
- Wall mounting possibility with M5 screws protected by covers.
- Transparent technopolymer bowl with shock resistant technopolymer protection
- Possibility to see the min. and max. level on 360° also with bowl protection assembled.
- Bowl assembled to the body with bayonet cap and safety button.
- Transparent technopolymer sight dome with adjusting handle.
- Oil filling plug.
- Electrical connector for low level indication.
- Use the C1, C2 or C3 lead for connection (see section 6 "Sensors").

Technical characteristic

Connections	G 1/4" - G 3/8"
Max working pressure (bar)	13 bar - 1,3 MPa
Temperature °C	50°C
Pressure gauge connections	G 1/8"
Weight	gr. 280
Indicative oil drop rate	1 drop every 300/600 Nl
Oil type	FD22 - HG32
Bowl capacity	52 cm³
Assembly position	Vertical
Wall fixing screw	M5
Min. operational flow at 6,3 bar	20 Nl/min
Max. fittings torque	25 Nm

Filter - pressure regulator

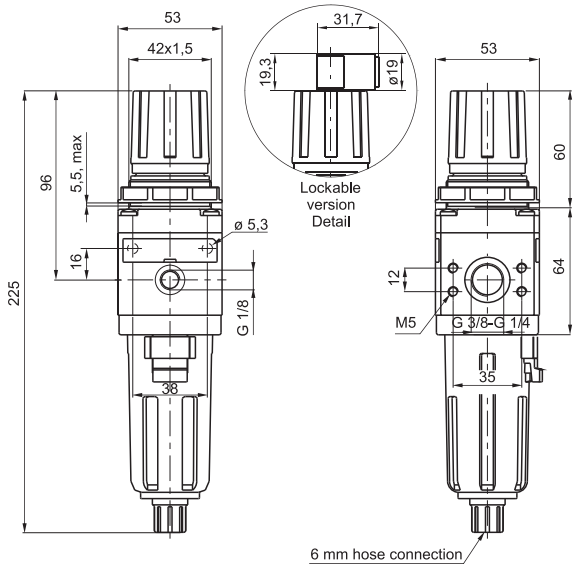

Ordering code

17204Ⓒ.Ⓢ.Ⓖ.Ⓣ.Ⓞ

Ⓒ	CONNECTIONS
	A = G 1/4"
	B = G 3/8"
Ⓢ	FILTER PORE SIZE
	A = 5μ
	B = 20μ
	C = 50μ
Ⓖ	ADJUSTING RANGE
	A = 0 - 2 bar
	B = 0 - 4 bar
	C = 0 - 8 bar
	D = 0 - 12 bar
Ⓣ	TYPE
	S = Automatic drain
Ⓞ	OPTION
	*Standard
	K = Lockable version

* No additional letters required

Example: 17204A.B.C
Filter - pressure regulator size 2 with G 1/4" connections, filter pore size 20μ and adjusting range 0-8 bar.

Flow rate curves

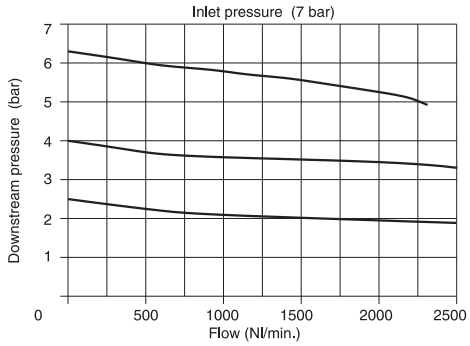

Adjustment characteristics

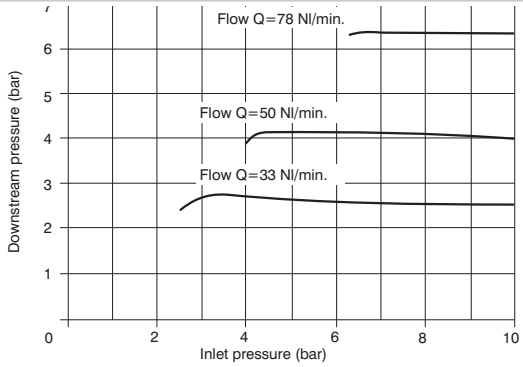

Operational characteristic

- Filter - diaphragm pressure regulator with relieving.
- Balanced poppet.
- Lockable handle by simply pressing it downwards in the desired position.
- Body made with light alloy.
- Wall mounting possibility with M5 screws protected by covers.
- Double filtering action: by air centrifuging and by replaceable and reusable HDPE porous filter element.
- Transparent technopolymer bowl with shock resistant technopolymer protection connected to the body with bayonet cap and safety button.
- Manual and semi-automatic water drain valve; in the semi-automatic version the drainage happens when there is no pressure or by pushing the valve up-wards.
- Possibility to see the water level on 360° also with bowl protection assembled.
- Automatic water drainage bowl available on request.
- Two pressure gauge connections with plug complete of seal.

Technical characteristic

Connections	G 1/4" - G 3/8"
Max working pressure (bar)	13 bar - 1,3 MPa
Minimum working pressure with automatic drain (bar)	0,5
Maximum working pressure with automatic drain (bar)	10
Temperature °C	50°C
Pressure gauge connections	G 1/8"
Weight with technopolymer body	gr. 450
Pressure range (bar)	0 - 2 / 0 - 4 / 0 - 8 / 0 - 12
Filter pore size	5μ - 20μ - 50μ
Bowl capacity	30 cm³
Assembly position	Vertical
Wall fixing screw	M5
Max. fittings torque	25 Nm

Progressive start-up valve

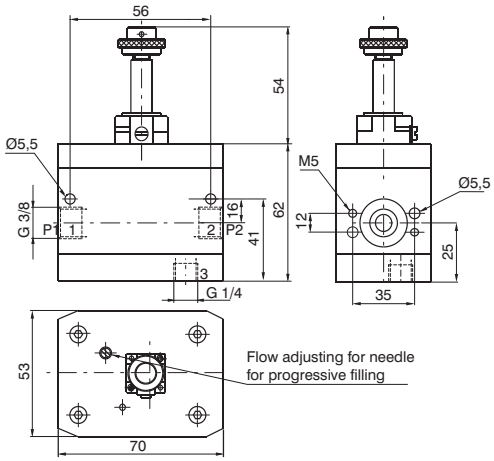

Ordering code

172Ⓣ

Ⓣ	TYPE
	10.M2 = Electric control complete wih M2 mechanic (see pag. 2.15)
	20 = with pneumatic control

Important note: the preventive or programmed maintenance of this product is not foreseen considering the elaborated assembling and the specific "PNEUMAX" testing; therefore, call the producer or its representative in case of necessity.

Operational characteristic

- 3-way valve with double poppet.
- Possibility to adjust the down stream circuit filling time by the enclosed adjustable metering screw.
- Quick down stream circuit discharge.
- Possibility for a pneumatic or electric piloting control.
- Body made with anodized 2011 aluminum alloy.
- Wall mounting possibility with M5 screws.

Technical characteristic

Connections	G 3/8"
Max working pressure (bar)	10 bar - 1 MPa
Temperature °C	50°C
Weight	gr. 595
Assembly position	Any
Wall fixing screw	M5
Min. working pressure	2,5 bar - 0,25 MPa
Nominal flow at 6 bar with Δp=1	1700 Nl/min.
Flow with adjustable metering screw fully open	340 Nl/min.

Shut-off valve

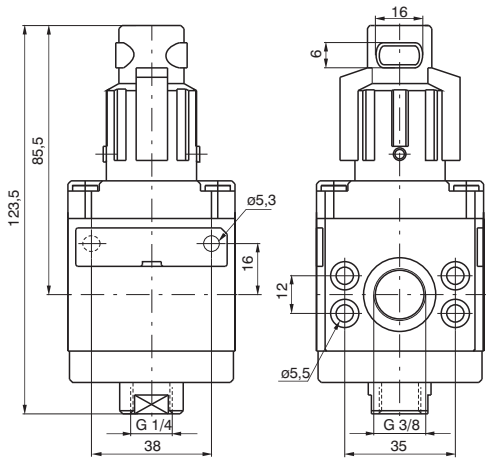

Ordering code

17230.Ⓣ

Ⓣ	TYPE
	A = Not lockable handle
	B = Lockable handle

Example: 17230.B
Shut-off valves size 2 complete with lockable handle.
Important note: the preventive or programmed maintenance of this product is not foreseen considering the elaborated assembling and the specific "PNEUMAX" testing; therefore, call the producer or its representative in case of necessity.

Operational characteristic

- 3 ways poppet valve.
- Body made with anodized aluminum alloy 2011.
- Wall mounting possibility with M5 screws protected by covers.
- Double handle action for valve opening: pushing and rotating (clockwise).
- Simple rotate the valve handle counter clockwise for valve closing and down stream circuit discharging.
- Possibility to lock the valve in the discharging position by fitting in a padlock in the proper seat.

Technical characteristic

Connections	G 3/8"
Max working pressure (bar)	10 bar - 1,3 MPa
Temperature °C	50°C
Weight	gr. 380
Weight	gr. 380
Nominal flow at 6 bar with Δp=1	2100 Nl/min.
Wall fixing screw	M5
Handle opening and closing angle	90°
Max. fittings torque	25 Nm
Min. operational flow at 6,3 bar	10 Nl/min.

Electrically operated shut-off valve

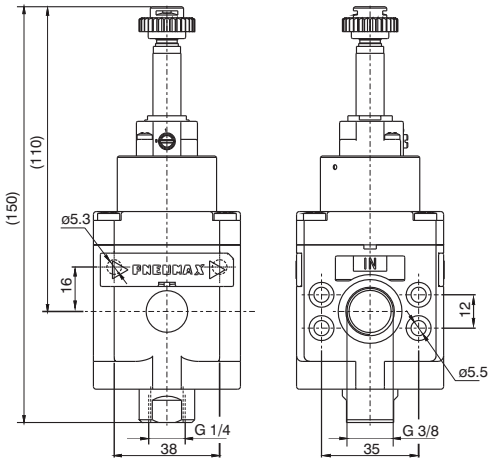

Ordering code	
17230.Ⓣ	
Ⓣ	TYPE
	M2 = Electric with M2
	M2/9 = Electric with M2/9

Example: 17230.M2 : Shut-off valve size 2 with electric control complete wih M2 mechanic
Important note: the preventive or programmed maintenance of this product is not foreseen considering the elaborated assembling and the specific “PNEUMAX” testing; therefore, call the producer or its representative in case of necessity.

Operational characteristic

- 3 ways poppet valve, electric control.
- Zinc alloy body or reinforced technopolymer body with threaded brass insert connections.
- Opening and closing of the valve via solenoid operator.
- The correct flow direction is indicated by the arrows stamped on the valve body.
- The supply pressure must be minimum 2 bars or higher for the solenoid operated version.
- The piloting pressure must be minimum 2bar or higher for the pneumatic operated version.(inlet pressure can be lower than 2 bar).
- It is possible to produce the external supplied solenoid version by mounting the 305.10.05 between the valve main body and the solenoid pilot valve.
- The air supply can only be done via port 1.
- Ensure that the downstream air consumption will not cause a pressure drop which could result in the pressure falling below the minimum operating values. If the pressure inside the valve falls below 2 bars , the valve might shut off.
- Wall mounting possibility with M5 screws protected by covers.

Technical characteristic

Inlet connections	G 3/8"
Exhaust connections	G 1/4"
Temperature °C	-5 °C - 50°C
Weight with anodized aluminium alloy 2011 body	gr. 440
Assembly position	Any
Wall fixing screw	M5
Max. fittings torque	25 Nm
Min. working pressure	2 bar
Max working pressure (bar)	13 bar
Flow rate at 6 bar with Δp=1	2100 Nl/min

Pneumatically operated shut-off valve

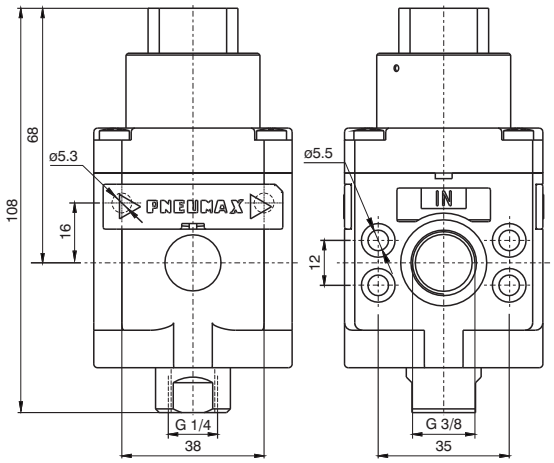

Ordering code
17230.PN

Example: 17230.PN : Shut-off valve size 2 with Pneumatic pilot.
Important note: the preventive or programmed maintenance of this product is not foreseen considering the elaborated assembling and the specific “PNEUMAX” testing; therefore, call the producer or its representative in case of necessity.

Operational characteristic

- 3 ways poppet valve, pneumatic pilot.
- Zinc alloy body or reinforced technopolymer body with threaded brass insert connections.
- Opening and closing of the valve via pneumatic operator
- The correct flow direction is indicated by the arrows stamped on the valve body.
- The supply pressure must be minimum 2 bars or higher for the solenoid operated version.
- The piloting pressure must be minimum 2bar or higher for the pneumatic operated version.(inlet pressure can be lower than 2 bar).
- It is possible to produce the external supplied solenoid version by mounting the 305.10.05 between the valve main body and the solenoid pilot valve.
- The air supply can only be done via port 1.
- Ensure that the downstream air consumption will not cause a pressure drop which could result in the pressure falling below the minimum operating values. If the pressure inside the valve falls below 2 bars , the valve might shut off.
- Wall mounting possibility with M5 screws protected by covers.

Technical characteristic

Piloting connections	G 1/8"
Temperature °C	-5 - + 50
Assembly position	Any
Weight with anodized aluminium alloy 2011 body	gr. 405
Wall fixing screw	M5
Max. fittings torque	25 Nm
Min. working pressure	2 bar
Max working pressure (bar)	13 bar
Piloting pressure	2 bar
Flow rate at 6 bar with Δp=1	2100 Nl/min

Filter pressure regulator + Lubricator

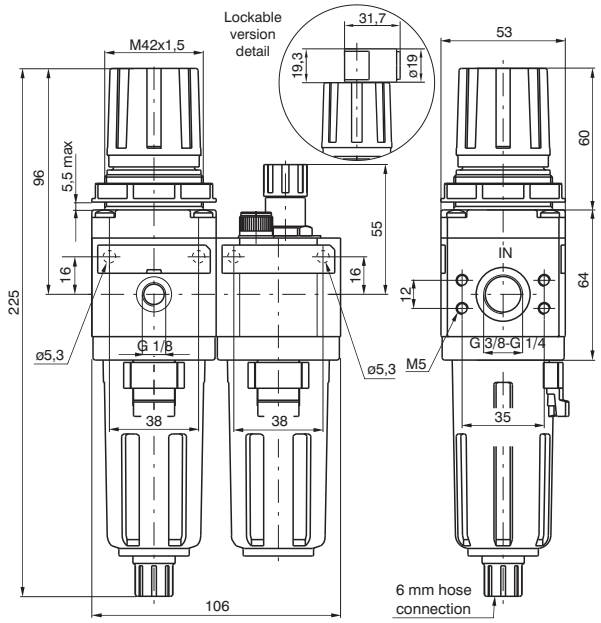

Ordering code

17206Ⓒ.Ⓢ.Ⓖ.Ⓣ.Ⓞ

Ⓒ	CONNECTIONS
	A = G 1/4"
	B = G 3/8"
Ⓢ	FILTER PORE SIZE
	A = 5μ
	B = 20μ
	C = 50μ
Ⓖ	ADJUSTING RANGE
	A = 0 - 2 bar
	B = 0 - 4 bar
	C = 0 - 8 bar
	D = 0 - 12 bar
Ⓣ	TYPE
	S = Automatic drain
Ⓞ	OPTION
	*Standard
	K = Lockable version

* No additional letters required

Example: 17206A.B.C.S
Service unit combination complete with filter - pressure regulator and lubricator size 2, G 1/4" connections, filter pore size 20μ, adjusting range 0-8 bar and automatic drain.

Flow rate curves

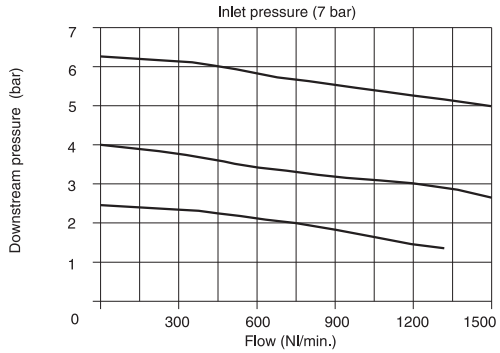

Adjustment characteristics

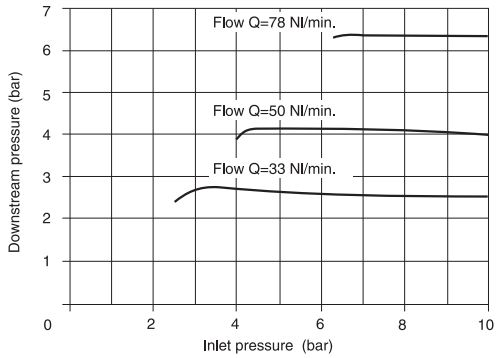

Operational characteristic

- Filter - diaphragm pressure regulator with relieving.
- Balanced poppet.
- Double filtering action: by air centrifuging and by replaceable and reusable HDPE porous filter element.
- Body made with light alloy.
- Wall mounting possibility with M5 screws protected by covers.
- Lockable handle by simply pressing it downwards in the desired position.
- Transparent technopolymer bowl with shock resistant technopolymer protection connected to the body with bayonet cap and safety button.
- Manual and semi-automatic water drain valve; in the semi-automatic version the drainage happens when there is no pressure or by pushing the valve up-wards.
- Possibility to see the water level on 360° also with bowl protection assembled.
- Automatic water drainage bowl available on request.
- Two pressure gauge connections with plug complete of seal.
- Fog type lubrication with variable section orifice according to the flow.
- Transparent technopolymer sight dome with adjusting handle.
- Oil filling plug.

Technical characteristic

Connections	G 1/4" - G 3/8"
Max working pressure (bar)	13 bar - 1,3 MPa
Temperature °C	50°C
Pressure gauge connections	G 1/8"
Weight	gr. 750
Pressure range (bar)	0 - 2 / 0 - 4 / 0 - 8 / 0 - 12
Filter pore size	5μ - 20μ - 50μ
Bowl capacity	30 cm³
Indicative oil drop rate	1 drop every 300/600 Nl
Oil type	FD22 - HG32
Bowl capacity	52 cm³
Min. operational flow at 6,3 bar	20 Nl/min
Assembly position	Vertical
Wall fixing screw	M5
Max. fittings torque	25 Nm

Filter + Pressure regulator + Lubricator

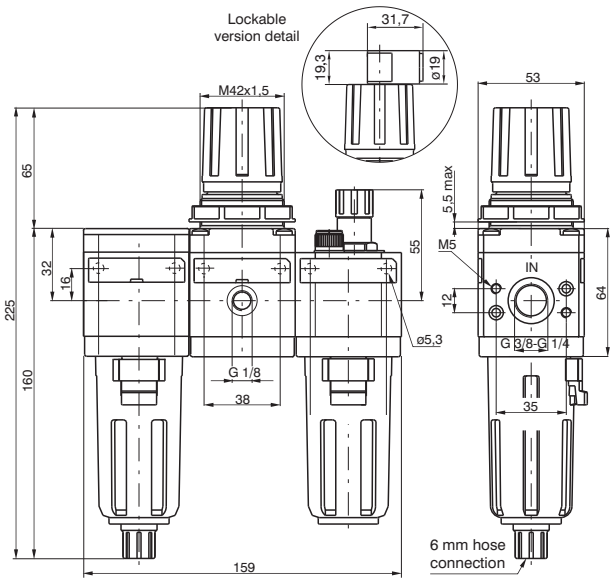

Ordering code

17207Ⓒ.Ⓢ.Ⓖ.Ⓣ.Ⓞ

Ⓒ	CONNECTIONS
	A = G 1/4"
	B = G 3/8"
Ⓢ	FILTER PORE SIZE
	A = 5μ
	B = 20μ
	C = 50μ
Ⓖ	ADJUSTING RANGE
	A = 0 - 2 bar
	B = 0 - 4 bar
	C = 0 - 8 bar
	D = 0 - 12 bar
Ⓣ	TYPE
	S = Automatic drain
Ⓞ	OPTION
	*Standard
	K = Lockable version

Example: 17207A.B.C.S
Service unit combination complete with filter - pressure regulator and lubricator size 2, G 1/4" connections, filter pore size 20μ, adjusting range 0-8 bar and automatic drain.

Flow rate curves

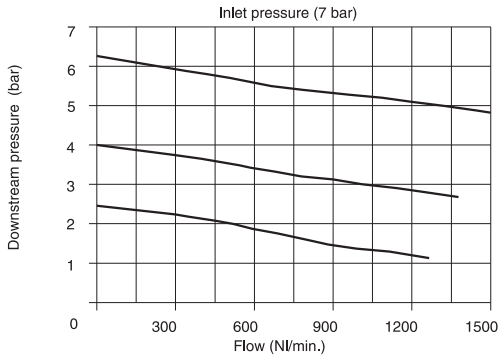

Adjustment characteristics

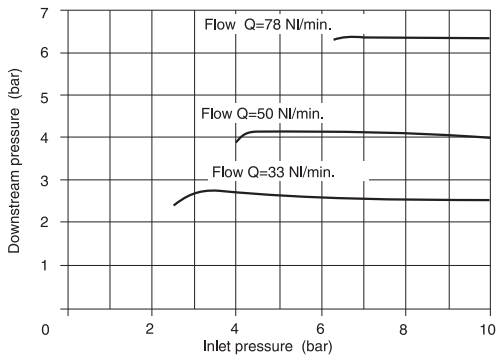

Operational characteristic

- Filter - diaphragm pressure regulator with relieving with balanced poppet.
- Double filtering action: by air centrifuging and by replaceable and reusable HDPE porous filter element.
- Body made with light alloy.
- Wall mounting possibility with M5 screws protected by covers.
- Pressure adjusting lockable handle by simply pressing it downwards in the desired position.
- Transparent technopolymer bowl with shock resistant technopolymer protection connected to the body with bayonet cap and safety button.
- Manual and semi-automatic water drain valve; in the semi-automatic version the drainage happens when there is no pressure or by pushing the valve up-wards.
- Automatic water drainage bowl available on request.
- Possibility to see the water level on 360° also with bowl protection assembled.
- Two pressure gauge connections with plug complete of seal.
- Fog type lubrication with variable section orifice according to the flow.
- Transparent technopolymer sight dome with adjusting handle.
- Oil filling plug.

Technical characteristic

Connections	G 1/4" - G 3/8"
Max working pressure (bar)	13 bar - 1,3 MPa
Temperature °C	50°C
Pressure gauge connections	G 1/8"
Weight	gr. 960
Pressure range (bar)	0 - 2 / 0 - 4 / 0 - 8 / 0 - 12
Filter pore size	5μ - 20μ - 50μ
Bowl capacity	30 cm³
Indicative oil drop rate	1 drop every 300/600 Nl
Oil type	FD22 - HG32
Bowl capacity	52 cm³
Min. operational flow at 6,3 bar	20 Nl/min
Assembly position	Vertical
Wall fixing screw	M5
Max. fittings torque	25 Nm

High sensitive air pressure regulator with adapter

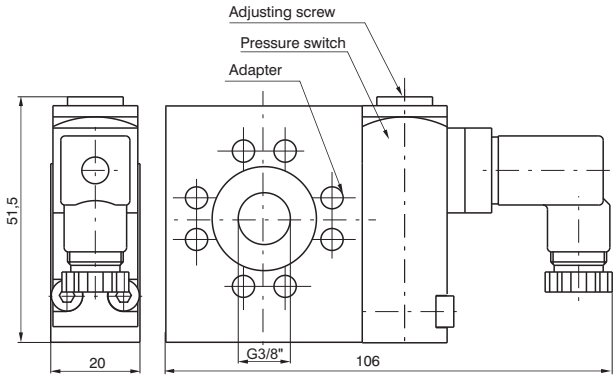

Ordering code

17Ⓣ

Ⓣ	TYPE
	24A = Pressure switch adapter
	14B = Pressure switch
	24C = Pressure switch complete with adapter

Example: 1724C
Pressure switch complete with adapter.

Connection

1 = Neutral
2 = N.C contact
3 = N.O contact

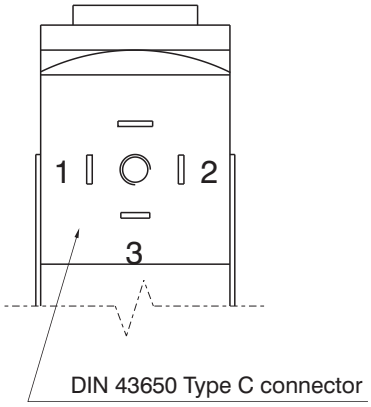

Operational characteristic

- The pressure switch complete of adapter has to be assembled between two elements of the FRL group.
- It cannot be utilized separately or at the end of the FRL group.
- The pressure switch can be set at desired pressure (Pressure range (bar) from 2 to 10 bar) by rotating the adjusting screw.
- The electrical connection is made by mean of a 15 connector DIN 43650 type C.
- The microswitch contact could be Normally Closed or open (change over switch).

Technical characteristic

Max working pressure (bar)	13 bar - 1,3 MPa
Temperature °C	50°C
Weight	gr. 200
Microswitch capacity	1A
Microswitch Maximum voltage	250 VAC
Grade of protection (with connector assembled)	IP 65
Pressure range (bar)	2 - 10 bar
Assembly position	Any

Air Intake

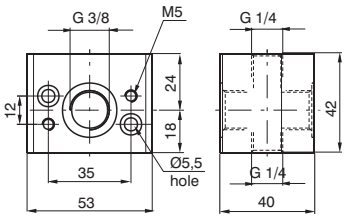

Ordering code

17240

Weight gr. 160

Air Intake - "H" profile

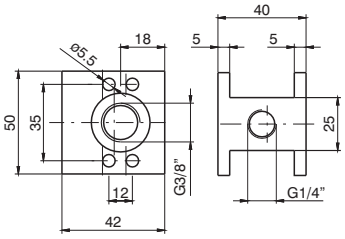

Ordering code

17240H

Weight gr. 116

Assembling kit

Ordering code

1726Ⓥ

Ⓥ	VERSION
	0 = Standard
	5 = for progressive start-up valve

Weight gr. 20

Pressure gauge

Ordering code

17070Ⓥ.Ⓢ

Ⓥ	VERSION
	A = Dial ø40
	B = Dial ø50
Ⓢ	SCALE
	A = Scale 0-4 bar
	B = Scale 0-6 bar
	C = Scale 0-12 bar

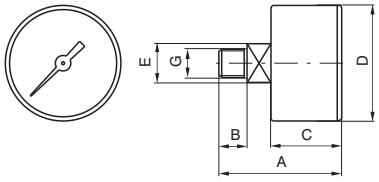

DIMENSIONS

CODE	A	B	C	D	E	G	Weight gr.
17070A	44	10	26	41	14	1/8”	60
17070B	45	10	27	49	14	1/8”	80

Manometer diameter D. 23 mm

Ordering code

17070M.Ⓢ

Ⓢ	SCALE
	A = Scale 0-4 bar
	B = Scale 0-6 bar
	C = Scale 0-12 bar

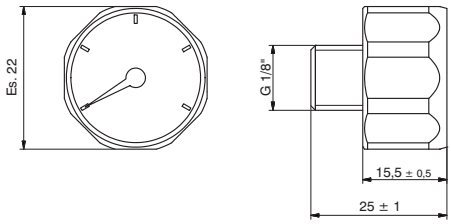

Fixing bracket

Ordering code

17250

Weight gr. 65

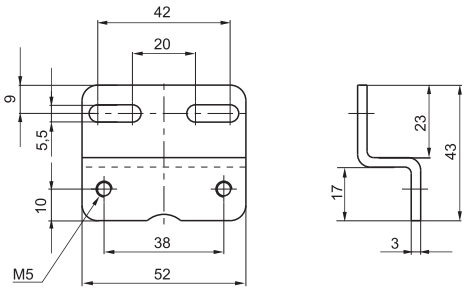

3

Construction and working characteristics

The modular air service units groups of the size 3, as the ones of size 1 and 2, allow a wide selection of combinations.
The threaded connections are machined directly on the valve body made with light alloy, so that each components can be used individually.
They can be wall mounted with head-guard screws masked by covers.
The bowls are made of transparent technopolymer, always supplied with shock resistant technopolymer protection, allowing the moisture and oil level control from any angle.
The filter can be equipped with manual or semiautomatic water drain valve; furthermore it's possible to install the automatic draining device inside the bowl.
The pressure regulator handle is lockable in the desired position.
The lubricator oil flow is adjustable with proper handle and it is visibly checked through the sight dome.
The shut-off valve can be equipped with pad-lock to prevent accidents or damages due to unauthorized operation.
The progressive start-up valve, pneumatically or electropneumatically controlled, allows air supply to the circuit progressively and with adjustable time.
Some accessories like the wall fixing bracket, pressure gauges with different scales and diameters, air intake block that assembled between the elements allows to get in the system filtered or filtered non-lubricated air, are completing the range.

Instruction for installation and operation

Pay attention to install a group or a single component with air flow direction according to the arrows and to the following sequence: filter, pressure regulator, lubricator and with bowls downwards. It's possible to fix the group to the wall by removing the covers, which can be installed again for covering the screw after fixing.
Do not exceed the recommended torque while assembling the connectors.
Do not exceed the recommended air pressure and temperature limits.
The moisture should not exceed the level marked on the bowl and it can be drawn off and carried away by a flexible tube of Ø 6/4 directly connected to the discharge valve handle.
The pressure should be set from minimum to maximum, rotating the adjusting handle clockwise.
As lubricant, we suggest to use oil class FD22 or HG32. Verify that the lubricator is not fed with a flow lower than the minimum operational.
To set the oil flow rotate the proper adjusting handle in order to get one drop of oil every 300-600 liters of air.
The oil flow will be kept automatically and proportionally to the air flow.
The oil can be refilled by mean of proper plug or directly into the bowl after having de-pressurized the system. Do not exceed the maximum level indicated on the bowl.
For opening the shut-off valve push and rotate clockwise the operating handle. For closing it and consequently discharging the down stream line, rotate the handle counter-clockwise.

Maintenance

Clean the bowls with water and detergent. Do not use alcohol.
The filter element made with HPDE is reusable by blowing and cleaning it with proper detergent. For replacing or cleaning it, remove the bowl and unscrew the baffle spins.
Replace the pressure regulator diaphragm whenever the operation is not correct or there is a continuous air leaking through the relieving (over pressure discharge); reinstall the adjusting mechanism support locking it with about 8 Nm torque.
In case it is necessary to replace the lubricator transparent dome, tight it at 5 Nm torque maximum.

Assembling

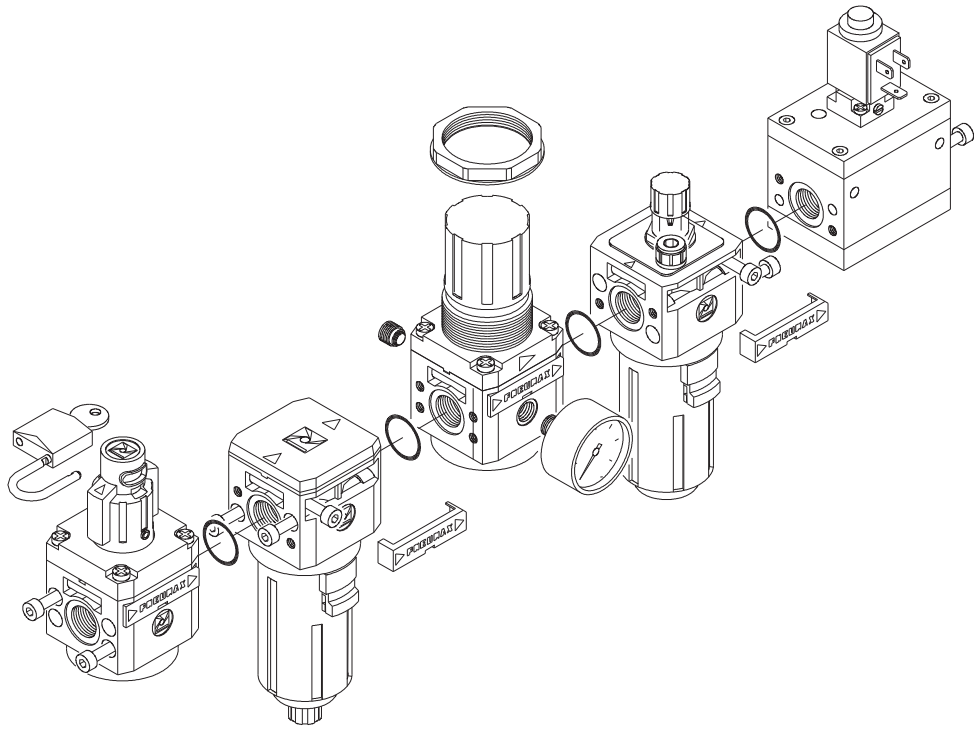

Filter

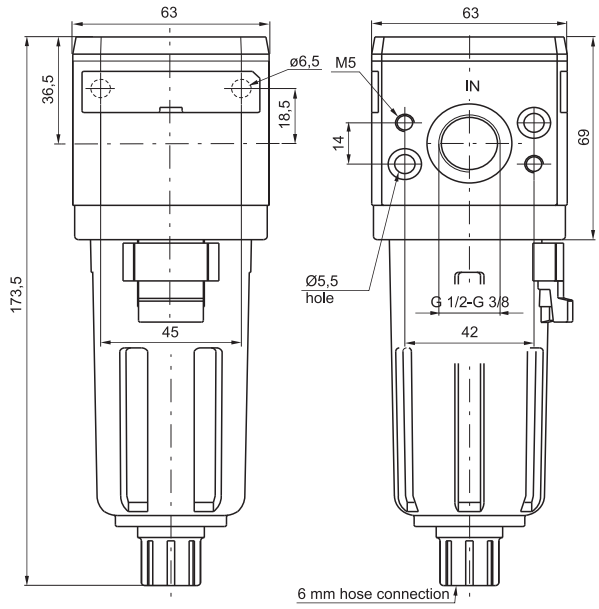

Ordering code

17301Ⓒ.Ⓢ.Ⓣ

Ⓒ	CONNECTIONS
	A = G 3/8"
	B = G 1/2"
Ⓢ	FILTER PORE SIZE
	A = 5μ
	B = 20μ
	C = 50μ
Ⓣ	TYPE
	S = Automatic drain

Example: 17301A.B
Filter size 3 with G 3/8" connections and filter pore size 20μ.

Flow rate curves

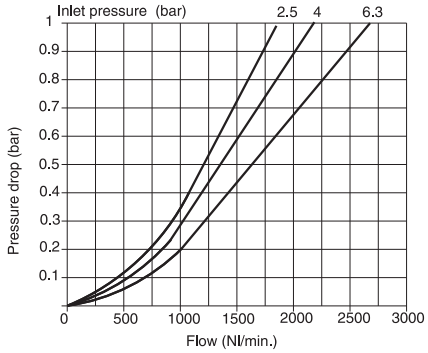

Operating Characteristics

- Body made with light alloy.
- Wall mounting possibility with M6 screws protected by covers.
- Double filtering action: by air centrifuging and by replaceable and reusable HDPE porous filter element.
- Transparent technopolymer bowl with shock resistant technopolymer protection connected to the body with bayonet cap and safety button.
- Manual and semi-automatic water drain valve; in the semi-automatic version the drainage happens when there is no pressure or by pushing the valve up-wards.
- Possibility to see the water level on 360°.
- Automatic water drainage bowl available on request.

Technical characteristics

Connections	G 3/8" - G 1/2"
Max working pressure (bar)	13 bar - 1,3 MPa
Minimum working pressure with automatic drain (bar)	0,5
Maximum working pressure with automatic drain (bar)	10
Temperature °C	50°C
Weight	gr. 405
Filter pore size	5μ - 20μ - 50μ
Bowl capacity	48 cm³
Assembly position	Vertical
Wall fixing screw	M6
Max. fittings torque	40 Nm

Coalescing filter

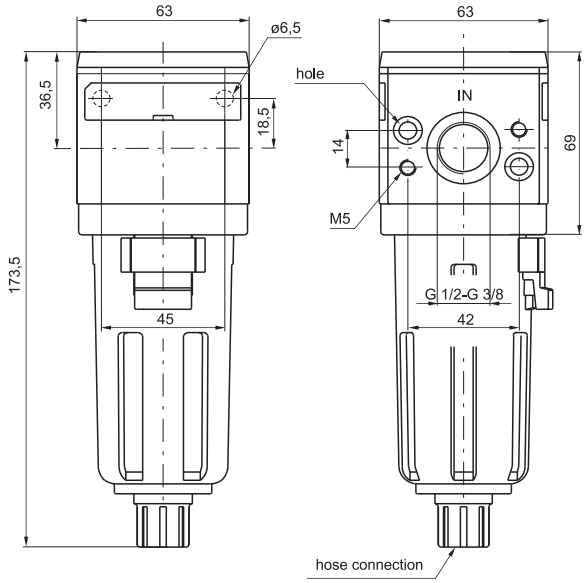

Ordering code

17308Ⓒ.Ⓔ.Ⓣ

Ⓒ	CONNECTIONS
	A = G 3/8"
	B = G 1/2"
Ⓔ	FILTER EFFICIENCY
	E = 99,97%
Ⓣ	TYPE
	S = Automatic drain

Example: 17308A.E
Coalescing filter size 3 with G 3/8" connections and filter efficiency of 99,97%.

Flow rate curves

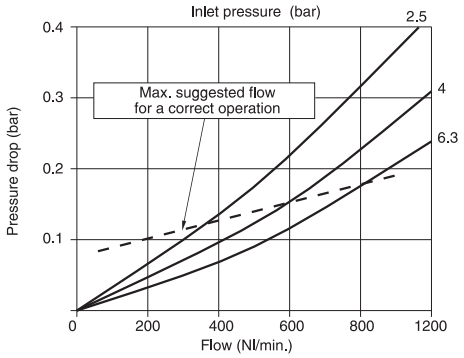

Operating Characteristics

- Coalescing filter element remove 0,01μ particles equivalent to 99,97%.
- Body made with light alloy.
- Wall mounting possibility with M6 screws protected by covers.
- Transparent technopolymer bowl with shock resistant technopolymer protection connected to the body with bayonet cap and safety button.
- Manual and semi-automatic water drain valve; in the semi-automatic version the drainage happens when there is no pressure or by pushing the valve up-wards.
- Possibility to see the water level on 360° also with bowl protection assembled.
- Automatic water drainage bowl available on request.

Technical characteristics

Connections	G 3/8" - G 1/2"
Max working pressure (bar)	13 bar - 1,3 MPa
Minimum working pressure with automatic drain (bar)	0,5
Maximum working pressure with automatic drain (bar)	10
Temperature °C	50°C
Weight	gr. 405
Filter efficiency with 0,01μ particle	99,97%
Bowl capacity	48 cm^3
Assembly position	Vertical
Wall fixing screw	M6
Max. fittings torque	40 Nm

Pressure regulator

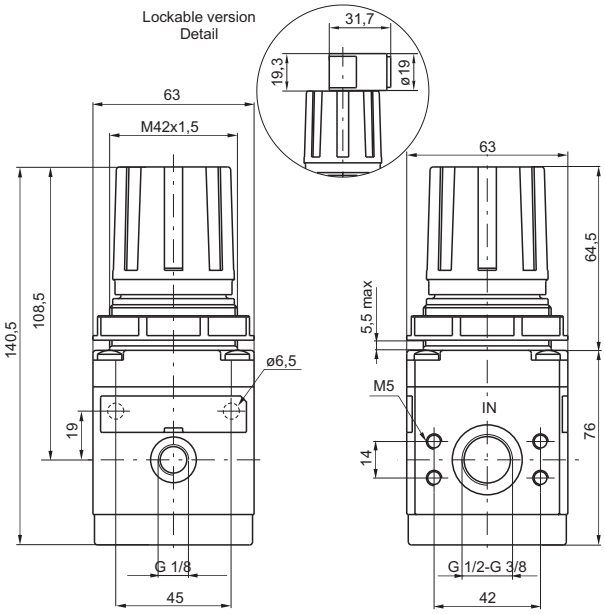

Ordering code

17302Ⓒ.Ⓖ.Ⓣ.Ⓞ

Ⓒ	CONNECTIONS
	A = G 3/8"
	B = G 1/2"
Ⓖ	ADJUSTING RANGE
	A = 0 - 2 bar
	B = 0 - 4 bar
	C = 0 - 8 bar
	D = 0 - 12 bar
Ⓣ	TYPE
	L = Without Relieving
	SM = improved relieving
Ⓞ	OPTION
	*Standard
	K = Lockable version

* No additional letters required

Example: 17302A.C
Pressure regulator with G 3/8" connections, adjusting range 0 - 8 bar with relieving.

Flow rate curves

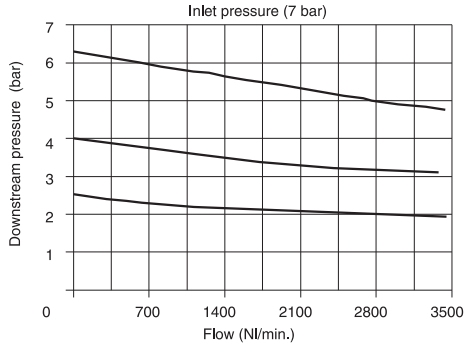

Adjustment characteristics

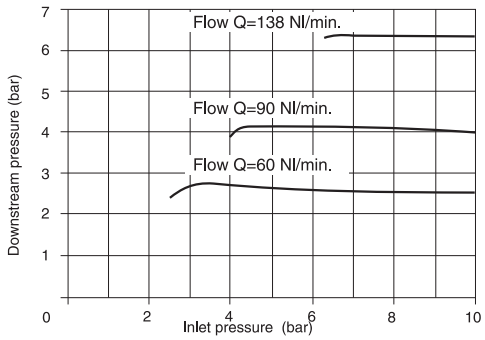

Operating Characteristics

- Diaphragm pressure regulator with relieving.
- Balanced poppet.
- Lockable handle by simply pressing it downwards in the desired position.
- Body made with light alloy.
- Wall mounting possibility with M6 screws protected by covers.
- Two pressure gauge connections with plug complete of seal.
- Panel mounting bracket.

Technical characteristics

Connections	G 3/8" - G 1/2"
Max working pressure (bar)	13 bar - 1,3 MPa
Temperature °C	-5 °C - 50°C
Pressure gauge connections	G 1/8"
Weight	gr. 550
Pressure range (bar)	0 - 2 / 0 - 4 / 0 - 8 / 0 - 12
Assembly position	Any
Wall fixing screw	M6
Max. fittings torque	40 Nm

Piloted pressure regulator

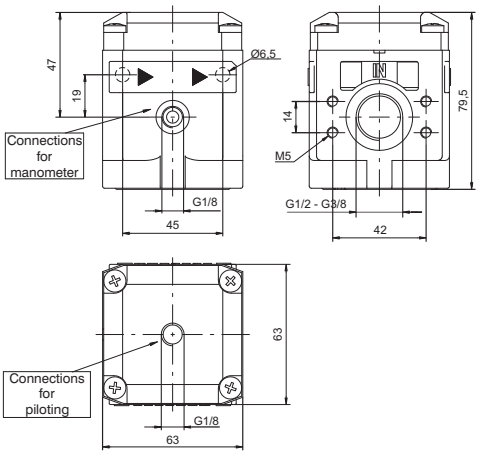

Ordering code

17302Ⓒ.P.Ⓣ

Ⓒ	CONNECTIONS
	A = G 3/8"
	B = G 1/2"
Ⓣ	TYPE
	*Standard version
	L = Without Relieving

* No additional letters required

Example: 17302A.P
Piloted pressure regulator with G 3/8" connections

Flow rate curves

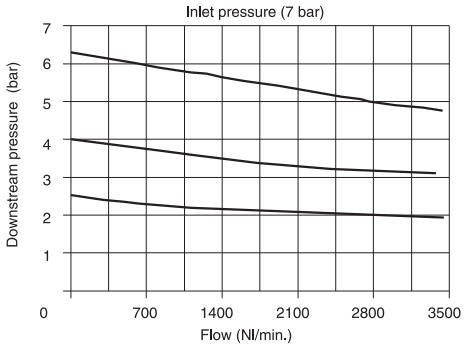

Adjustment characteristics

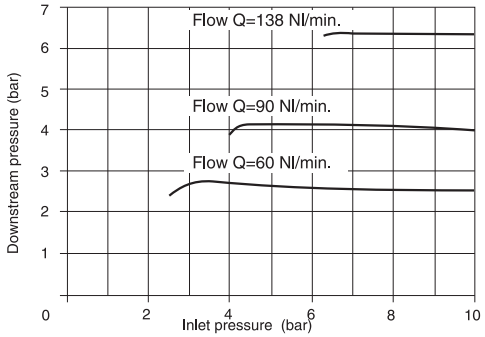

Piloting curves

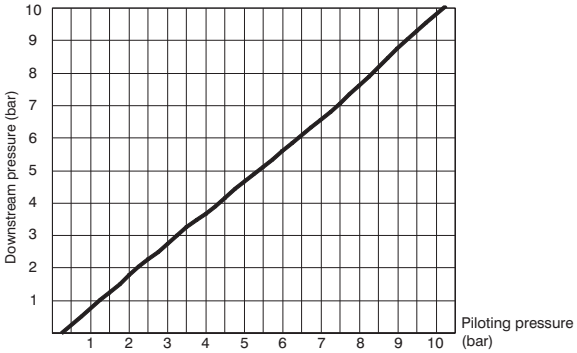

Operating Characteristics

- Diaphragm pressure regulator with relieving.
- Balanced poppet.
- Body made with light alloy.
- Wall mounting possibility with M5 screws protected by covers.
- Two pressure gauge connections with plug complete of seal.
- Panel mounting bracket.

Technical characteristics

Connections	G 3/8" - G 1/2"
Max working pressure (bar)	13 bar - 1,3 MPa
Temperature °C	50°C
Assembly position	Any
Wall fixing screw	M5
Max. fittings torque	25 Nm
Weight	gr. 510

Pressure regulator including manometer

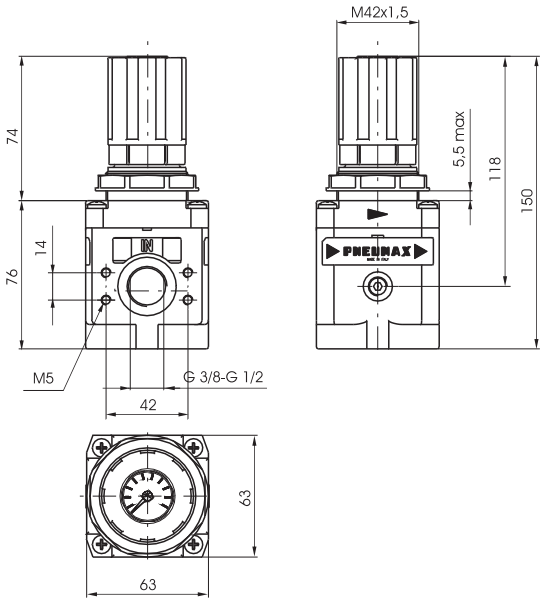

Ordering code

17322Ⓒ.Ⓖ

Ⓒ	CONNECTIONS
	A = G 3/8"
	B = G 1/2"
Ⓖ	ADJUSTING RANGE
	A = 0 - 2 bar
	B = 0 - 4 bar
	C = 0 - 8 bar
	D = 0 - 12 bar

Example: 17322A.C
Pressure regulator with G 3/8" connections, adjusting range 0 - 8 bar with relieving.

Flow rate curves

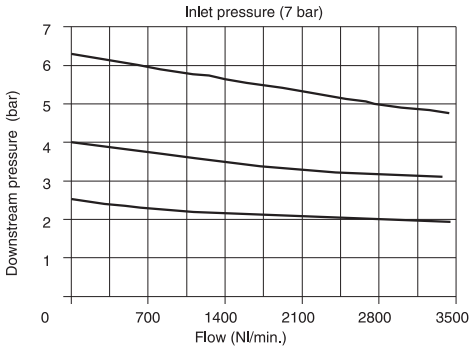

Adjustment characteristics

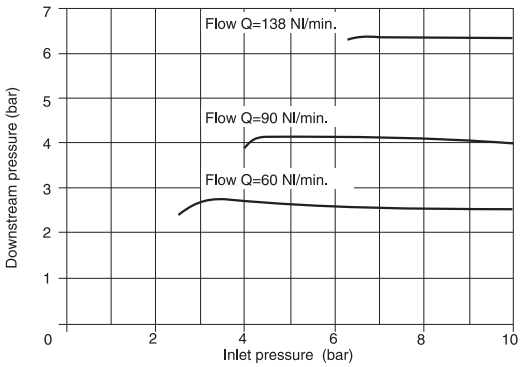

Operating Characteristics

- Diaphragm pressure regulator with relieving.
- Pressure gauge included on the top of adjusting knob.
- Balanced poppet.
- Lockable handle by simply pressing it downwards in the desired position.
- Body made with light alloy.
- Wall mounting possibility with M5 screws protected by covers.
- Panel mounting bracket.

Technical characteristics

Connections	G 3/8" - G 1/2"
Max working pressure (bar)	13 bar - 1,3 MPa
Temperature °C	-5 °C - 50°C
Pressure gauge connections	G 1/8"
Weight	gr. 600
Pressure range (bar)	0 - 2 / 0 - 4 / 0 - 8 / 0 - 12
Assembly position	Any
Wall fixing screw	M6
Max. fittings torque	40 Nm

Lubricator

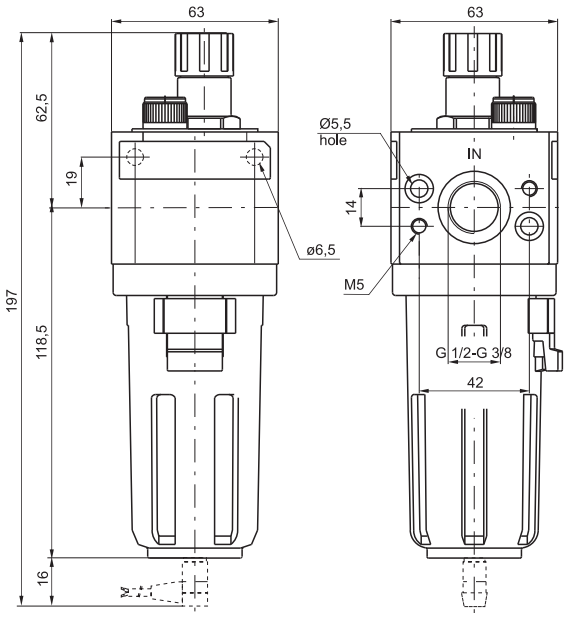

Ordering code

17303Ⓒ.Ⓣ

Ⓒ	CONNECTIONS
	A = G 3/8"
	B = G 1/2"
Ⓣ	TYPE
	MA = Min. oil level indicator N.O. with plug connector
	MC = Min. oil level indicator N.C. with plug connector

Example: 17303A
Lubricator with G 3/8" connections.
Note: on the MA version the contact is open when oil is present; on the MC version the contact is closed when oil is present

Flow rate curves

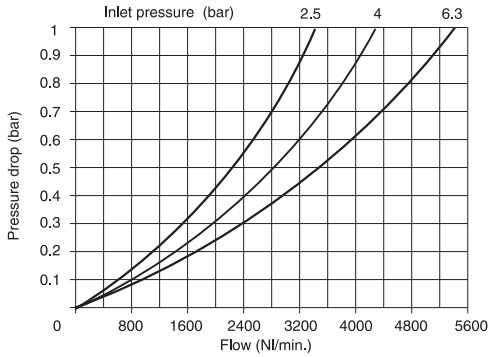

Operating Characteristics

- Fog type lubrication with variable section orifice according to the flow.
- Body made with light alloy.
- Wall mounting possibility with M5 screws protected by covers.
- Transparent technopolymer bowl with shock resistant technopolymer protection
- Possibility to see the min. and max. level on 360° also with bowl protection assembled.
- Bowl assembled to the body with bayonet cap and safety button.
- Transparent technopolymer sight dome with adjusting handle.
- Oil filling plug.
- Electrical connector for low level indication.
- Use the C1, C2 or C3 lead for connection (see chapter 6 "Sensors").

Technical characteristics

Connections	G 3/8" - G 1/2"
Max working pressure (bar)	13 bar - 1,3 MPa
Temperature °C	-5 °C - 50°C
Weight	gr. 435
Indicative oil drop rate	1 drop every 300/600 Nl
Oil type	FD22 - HG32
Bowl capacity	62 cm³
Assembly position	Vertical
Wall fixing screw	M6
Min. operational flow at 6,3 bar	20 Nl/min
Max. fittings torque	40 Nm

Filter - pressure regulator

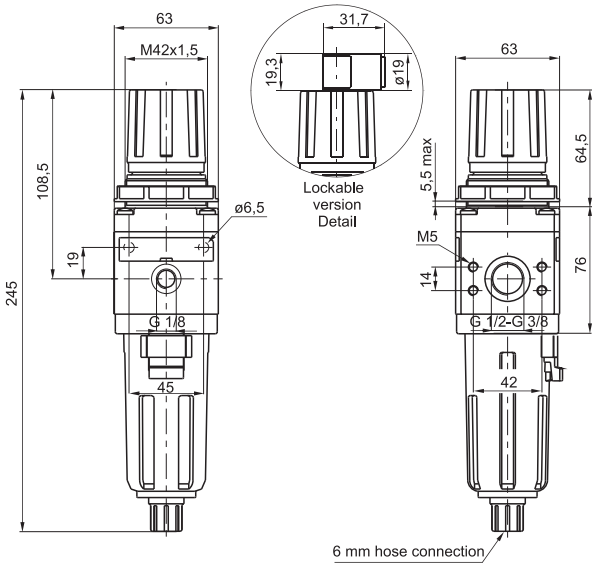

Ordering code

17304Ⓒ.Ⓢ.Ⓖ.Ⓣ.Ⓞ

Ⓒ	CONNECTIONS
	A = G 3/8"
	B = G 1/2"
Ⓢ	FILTER PORE SIZE
	A = 5μ
	B = 20μ
	C = 50μ
Ⓖ	ADJUSTING RANGE
	A = 0 - 2 bar
	B = 0 - 4 bar
	C = 0 - 8 bar
	D = 0 - 12 bar
Ⓣ	TYPE
	S = Automatic drain
Ⓞ	OPTION
	*Standard
	K = Lockable version

* No additional letters required

Example: 17304A.B.C
Filter - pressure regulator size 3 with G 3/8" connections, filter pore size 20μ and adjusting range 0-8 bar.

Flow rate curves

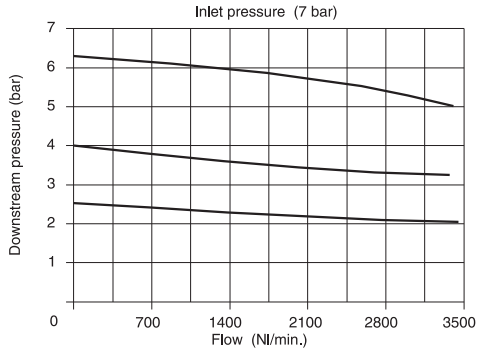

Adjustment characteristics

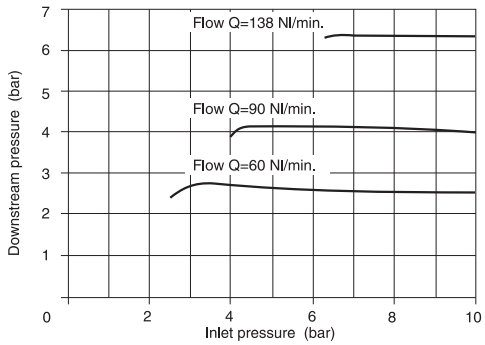

Operating Characteristics

- Filter - diaphragm pressure regulator with relieving.
- Balanced poppet.
- Lockable handle by simply pressing it downwards in the desired position.
- Body made with light alloy.
- Wall mounting possibility with M6 screws protected by covers.
- Double filtering action: by air centrifuging and by replaceable and reusable HDPE porous filter element.
- Transparent technopolymer bowl with shock resistant technopolymer protection connected to the body with bayonet cap and safety button.
- Manual and semi-automatic water drain valve; in the semiautomatic version the drainage happen when there is no pressure or by pushing the valve up-wards.
- Possibility to see the water level on 360° also with bowl protection assembled.
- Automatic water drainage bowl available on request.
- Two pressure gauge connections with plug complete of seal.

Technical characteristics

Connections	G 3/8" - G 1/2"
Max working pressure (bar)	13 bar - 1,3 MPa
Minimum working pressure with automatic drain (bar)	0,5
Maximum working pressure with automatic drain (bar)	10
Temperature °C	-5 °C - 50°C
Pressure gauge connections	G 1/8"
Weight	gr. 645
Pressure range (bar)	0 - 2 / 0 - 4 / 0 - 8 / 0 - 12
Filter pore size	5μ - 20μ - 50μ
Bowl capacity	48 cm³
Assembly position	Vertical
Wall fixing screw	M6
Max. fittings torque	40 Nm

Progressive start-up valve

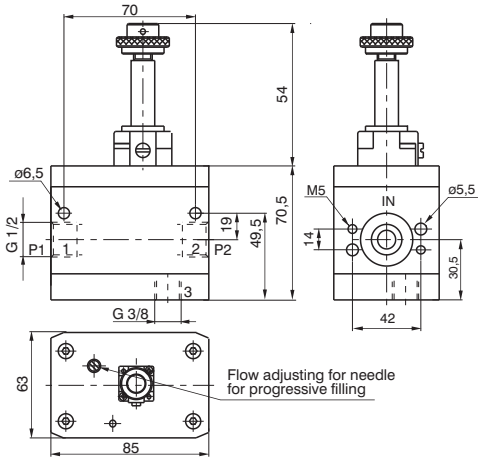

Ordering code

173T

T	TYPE
	10.M2 = Electric control complete wih M2 mechanic (see pag. 2.15)
	20 = with pneumatic control

Important note: the preventive or programmed Maintenance of this product is not foreseen considering the elaborated assembling and the specific "PNEUMAX" testing; therefore, call the producer or its representative in case of necessity.

Operating Characteristics

- 3 way valve with double poppet.
- Possibility to adjust the down stream circuit filling time by the enclosed adjustable metering screw.
- Quick down stream circuit discharge.
- Possibility for a pneumatic or electric piloting control.
- Body made with anodized 2011 aluminum alloy.
- Wall mounting possibility with M6 screws.

Technical characteristics

Connections	G 1/2"
Max working pressure (bar)	10 bar - 1 MPa
Temperature °C	-5 °C - 50°C
Weight	gr. 1010
Assembly position	Any
Wall fixing screw	M6
Min. working pressure	2,5 bar - 0,25 MPa
Nominal flow at 6 bar with Δp=1	2500 Nl/min.
Flow with adjustable metering screw fully open	340 Nl/min.

3

Shut-off valve

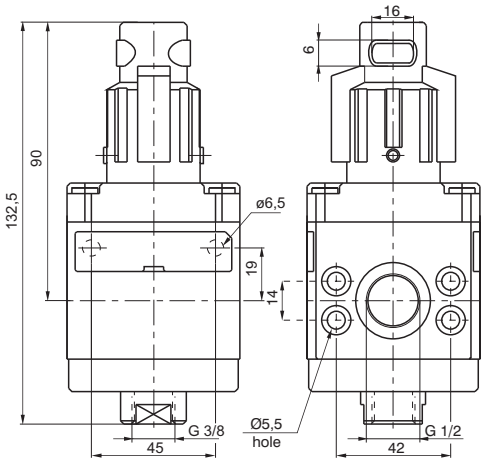

Ordering code

17330.T

T	TYPE
	A = Not lockable handle
	B = Lockable handle

Example: 17330.B
Shut-off valve size 3 complete with lockable handle.
Important note: the preventive or programmed Maintenance of this product is not foreseen considering the elaborated assembling and the specific "PNEUMAX" testing; therefore, call the producer or its representative in case of necessity.

Operating Characteristics

- 3 ways poppet valve.
- Body made with light alloy.
- Wall mounting possibility with M6 screws protected by covers.
- Double action handle for valve opening: pushing and rotating (clockwise).
- Simple rotate the valve handle counter clockwise for valve closing and down stream circuit discharging.
- Possibility to lock the valve in the discharging position by fitting in a padlock in the proper seat.

Technical characteristics

Connections	G 1/2"
Max working pressure (bar)	13 bar - 1,3 MPa
Temperature °C	-5 °C - 50°C
Weight	gr. 550
Assembly position	Any
Nominal flow at 6 bar with Δp=1	2500 Nl/min.
Wall fixing screw	M6
Handle opening and closing angle	90°
Max. fittings torque	40 Nm

Electrically operated shut-off valve

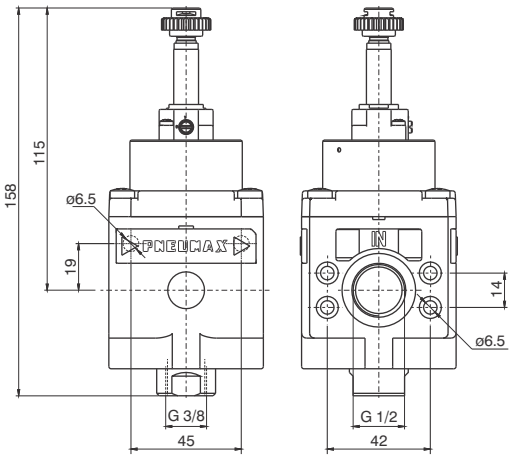

Ordering code
17330.Ⓣ

	TYPE
Ⓣ	M2 = Electric with M2
	M2/9 = Electric with M2/9

Example: 17330.M2 : Shut-off valve size 3 with electric control complete wih M2 mechanic.
Important note: the preventive or programmed Maintenance of this product is not foreseen considering the elaborated assembling and the specific “PNEUMAX” testing; therefore, call the producer or its representative in case of necessity.

Operating Characteristics

- 3 ways poppet valve, electric control.
- Zinc alloy body or reinforced technopolymer body with threaded brass insert connections.
- Opening and closing of the valve via solenoid operator.
- The correct flow direction is indicated by the arrows stamped on the valve body.
- The supply pressure must be minimum 2 bars or higher for the solenoid operated version.
- The piloting pressure must be minimum 2bar or higher for the pneumatic operated version.(inlet pressure can be lower than 2 bar).
- It is possible to produce the external supplied solenoid version by mounting the 305.10.05 between the valve main body and the solenoid pilot valve.
- The air supply can only be done via port 1.
- Ensure that the downstream air consumption will not cause a pressure drop which could result in the pressure falling below the minimum operating values. If the pressure inside the valve falls below 2 bars , the valve might shut off.
- Wall mounting possibility with M6 screws protected by covers.

Technical characteristics

Inlet connections	G 1/2"
Exhaust connections	G 3/8"
Temperature °C	-5 °C - 50°C
Weight with anodized aluminium alloy 2011 body	gr. 680
Assembly position	Any
Wall fixing screw	M6
Max. fittings torque	40 Nm
Min. working pressure	2 bar
Max working pressure (bar)	13 bar
Flow rate at 6 bar with Δp=1	3200 Nl/min

Pneumatically operated shut-off valve

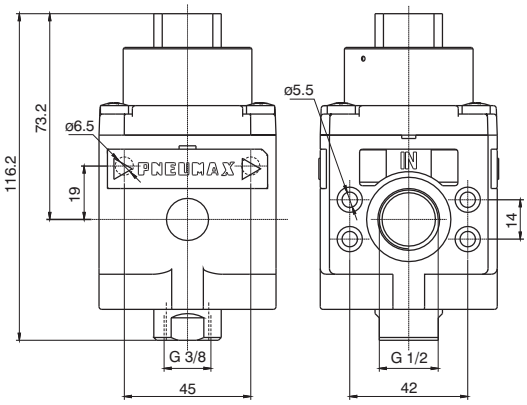

Ordering code
17330.PN

Example: 17330.PN : Shut-off valve size 3 with pneumatic pilot.
Important note: the preventive or programmed Maintenance of this product is not foreseen considering the elaborated assembling and the specific “PNEUMAX” testing; therefore, call the producer or its representative in case of necessity.

Operating Characteristics

- 3 ways poppet valve, pneumatic pilot.
- Zinc alloy body or reinforced technopolymer body with threaded brass insert connections.
- Opening and closing of the valve via pneumatic operator
- The correct flow direction is indicated by the arrows stamped on the valve body.
- The supply pressure must be minimum 2 bars or higher for the solenoid operated version.
- The piloting pressure must be minimum 2bar or higher for the pneumatic operated version.(inlet pressure can be lower than 2 bar).
- It is possible to produce the external supplied solenoid version by mounting the 305.10.05 between the valve main body and the solenoid pilot valve.
- The air supply can only be done via port 1.
- Ensure that the downstream air consumption will not cause a pressure drop which could result in the pressure falling below the minimum operating values. If the pressure inside the valve falls below 2 bars , the valve might shut off.
- Wall mounting possibility with M6 screws protected by covers.

Technical characteristics

Piloting connections	G 1/2"
Temperature °C	-5 - + 50
Weight with anodized aluminium alloy 2011 body	gr. 645
Assembly position	Any
Wall fixing screw	M6
Max. fittings torque	40 Nm
Min. working pressure	2 bar
Max working pressure (bar)	13 bar
Piloting pressure	2 bar
Flow rate at 6 bar with Δp=1	3200 Nl/min

Filter pressure regulator + Lubricator

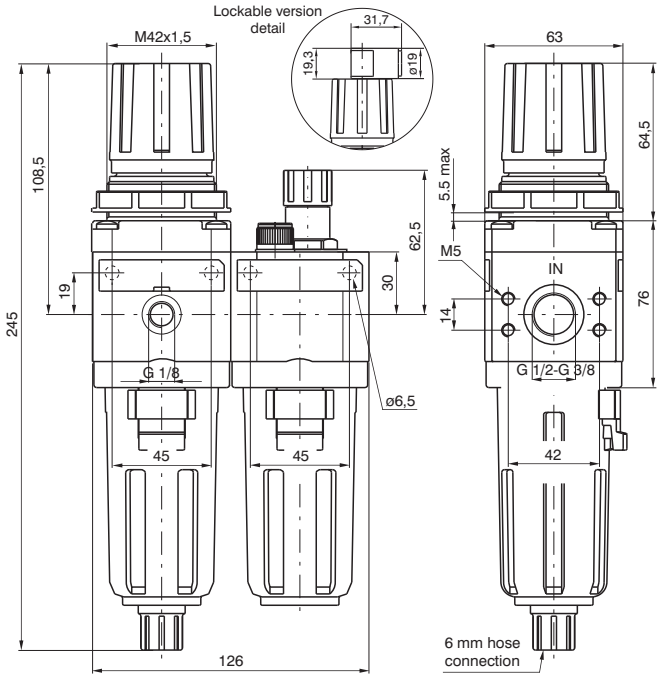

Ordering code

17306Ⓒ.Ⓢ.Ⓖ.Ⓣ.Ⓞ

Ⓒ	CONNECTIONS
	A = G 3/8"
	B = G 1/2"
Ⓢ	FILTER PORE SIZE
	A = 5μ
	B = 20μ
	C = 50μ
Ⓖ	ADJUSTING RANGE
	A = 0 - 2 bar
	B = 0 - 4 bar
	C = 0 - 8 bar
	D = 0 - 12 bar
Ⓣ	TYPE
	S = Automatic drain
Ⓞ	OPTION
	*Standard
	K = Lockable version

* No additional letters required

Example: 17306A.B.C.S
Service unit combination complete with filter - pressure regulator + lubricator size 3 G 3/8" connections, filter pore size 20μ, adjusting range 0-8 bar and automatic drain.

Flow rate curves

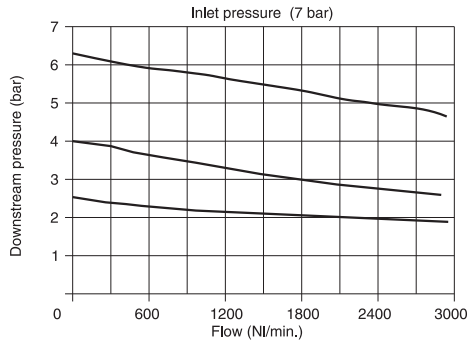

Adjustment characteristics

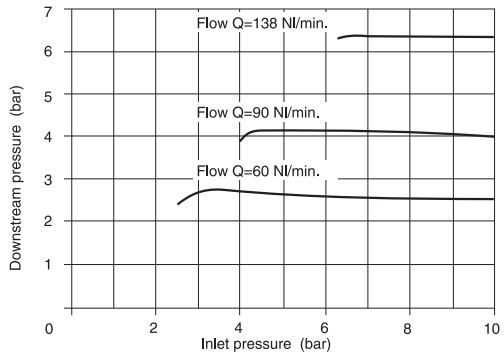

Operating Characteristics

- Filter - diaphragm pressure regulator with relieving.
- Balanced poppet.
- Double filtering action: by air centrifuging and by replaceable and reusable HDPE porous filter element.
- Body made with light alloy.
- Wall mounting possibility with M6 screws protected by covers.
- Lockable handle by simply pressing it downwards in the desired position.
- Transparent technopolymer bowl with shock resistant technopolymer protection connected to the body with bayonet cap and safety button.
- Manual and semi-automatic water drain valve; in the semi-automatic version the drainage happens when there is no pressure or by pushing the valve up-wards.
- Possibility to see the water level on 360° also with bowl protection assembled.
- Automatic water drainage bowl available on request.
- Two pressure gauge connections with plug complete of seal.
- Fog type lubrication with variable section orifice according to the flow.
- Transparent technopolymer sight dome with adjusting handle.
- Oil filling plug.

Technical characteristics

Connections	G 3/8" - G 1/2"
Max working pressure (bar)	13 bar - 1,3 MPa
Temperature °C	-5 °C - 50°C
Pressure gauge connections	G 1/8"
Weight	gr. 1100
Pressure range (bar)	0 - 2 / 0 - 4 / 0 - 8 / 0 - 12
Filter pore size	5μ - 20μ - 50μ
Filter bowl capacity	48 cm³
Indicative oil drop rate	1 drop every 300/600 Nl
Oil type	FD22 - HG32
Lubricator bowl capacity	62 cm³
Min. operational flow at 6,3 bar	20 Nl/min.
Assembly position	Vertical
Wall fixing screw	M6
Max. fittings torque	40 Nm

Filter + Pressure regulator + Lubricator

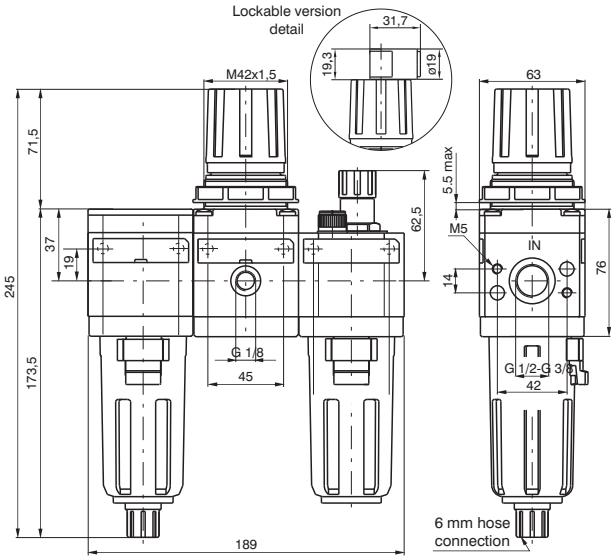

Ordering code

17307Ⓒ.Ⓢ.Ⓖ.Ⓣ.Ⓞ

Ⓒ	CONNECTIONS
	A = G 3/8"
	B = G 1/2"
Ⓢ	FILTER PORE SIZE
	A = 5μ
	B = 20μ
	C = 50μ
Ⓖ	ADJUSTING RANGE
	A = 0 - 2 bar
	B = 0 - 4 bar
	C = 0 - 8 bar
	D = 0 - 12 bar
Ⓣ	TYPE
	S = Automatic drain
Ⓞ	OPTION
	*Standard
	K = Lockable version

* No additional letters required

Example: 17307A.B.C.S
Service unit combination complete with filter - pressure regulator and lubricator size 3, G 3/8" connections, filter pore size 20μ, adjusting range 0-8 bar and automatic drain.

Flow rate curves

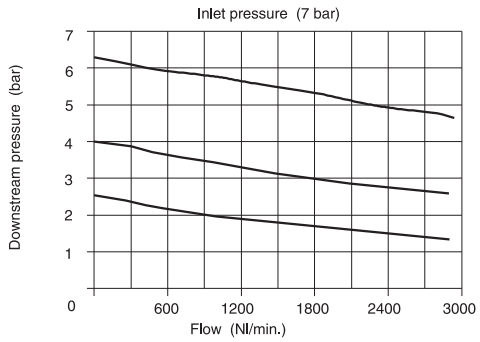

Adjustment characteristics

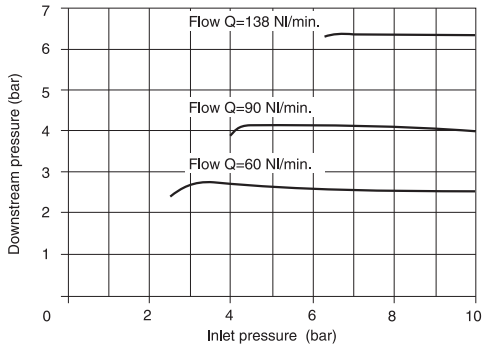

Operating Characteristics

- Filter - diaphragm pressure regulator with relieving and balanced poppet.
- Double filtering action: by air centrifuging and by replaceable and reusable HDPE porous filter element.
- Body made with light alloy.
- Wall mounting possibility with M6 screws protected by covers.
- Pressure adjusting lockable handle by simply pressing it downwards in the desired position.
- Transparent technopolymer bowl with shock resistant technopolymer protection connected to the body with bayonet cap and safety button.
- Manual and semi-automatic water drain valve; in the semi-automatic version the drainage happens when there is no pressure or by pushing the valve up-wards.
- Automatic water drainage bowl available on request.
- Possibility to see the water level on 360° also with bowl protection assembled.
- Two pressure gauge connections with plug complete of seal.
- Fog type lubrication with variable section orifice according to the flow.
- Transparent technopolymer sight dome with adjusting handle.
- Oil filling plug.

Technical characteristics

Connections	G 3/8" - G 1/2"
Max working pressure (bar)	13 bar - 1,3 MPa
Temperature °C	-5 °C - 50°C
Pressure gauge connections	G 1/8"
Weight	gr. 1430
Pressure range (bar)	0 - 2 / 0 - 4 / 0 - 8 / 0 - 12
Filter pore size	5μ - 20μ - 50μ
Filter bowl capacity	48 cm³
Indicative oil drop rate	1 drop every 300/600 Nl
Oil type	FD22 - HG32
Lubricator bowl capacity	62 cm³
Min. operational flow at 6,3 bar	20 Nl/min.
Assembly position	Vertical
Wall fixing screw	M6
Max. fittings torque	40 Nm

High sensitive air pressure regulator with high flow rate relieving

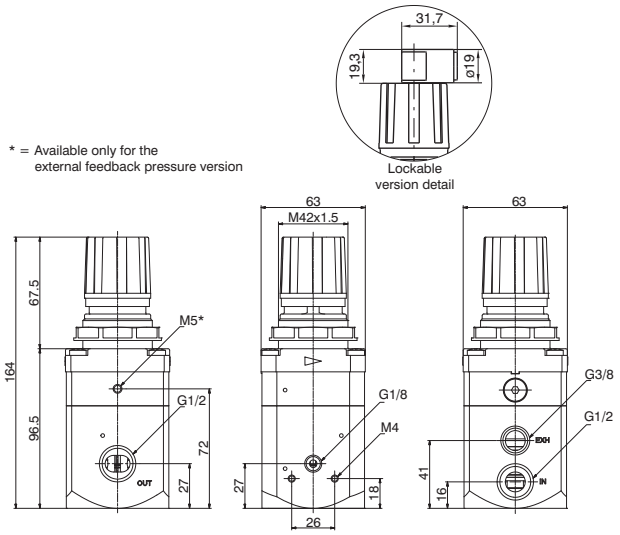

Ordering code

173S2B.Ⓖ.Ⓣ.Ⓞ

Ⓖ	ADJUSTING RANGE
	0002 = 0,1 - 2 bar
	0004 = 0,1 - 4 bar
	0007 = 0 ,1- 7 bar
	0010 = 0 ,1- 10 bar
Ⓣ	TYPE
	=Standard (without options)
	E=External pressure feedback
Ⓞ	OPTION
	*Standard
	K = Lockable version

* No additional letters required

Example: 173S2B.C
Pressure regulator G 1/2", with adjusting range from 0,1 at 7 bar.

Flow rate curves

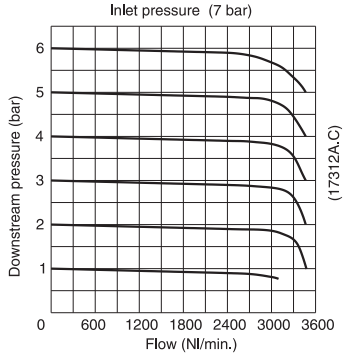

Adjustment characteristics

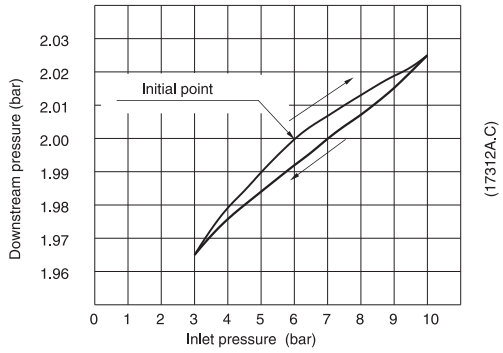

Exhaust flow rate curves

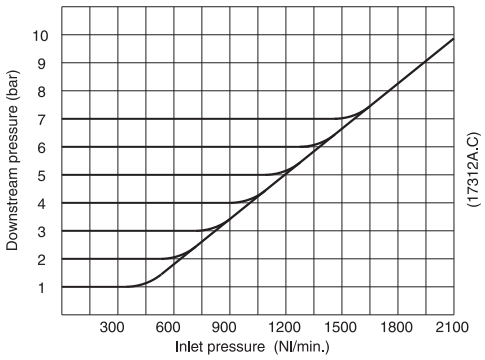

Operating Characteristics

- Accurate capacity to maintain set pressure.
- Sensitivity combined with high relieving rates.
- High flow rate with extremely low pressure drop.
- Pressure adjusting lockable handle by simply pressing it donwards in the desired position.
- Body made with light alloy.
- Two pressure gauge connections with plug complete of seal.
- Ring nut for panel mounting.
- Once set, a constant bleed of air maintains the accuracy of the regulator. This controlled release is a characteristic, not a fault.

Technical characteristics

Connections	G 1/2"
Max working pressure (bar)	10 bar - 1 MPa
Temperature °C	-5 °C - 50°C
Pressure gauge connections	G 1/8"
Weight	gr. 970
Pressure range (bar)	0,1 - 2 / 0,1 - 4 0,1 - 7 / 0,1 - 10
Assembly position	Any
Air flow (inlet pressure 10 bar)	5 Nl/min
Max. fittings torque	40 Nm
Fluid	20μm filtered air and preferably non lubricated
Mounting holes diameter for panel mounting	42 mm

High sensitive air pressure regulator with high flow rate relieving

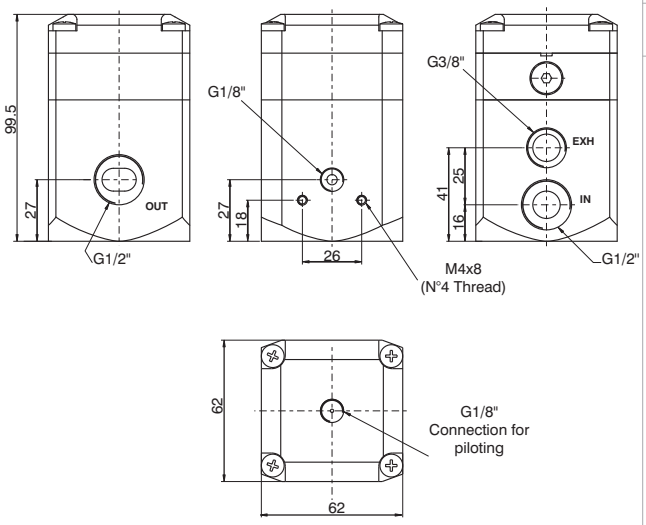

Ordering code

173P2B.0010

Example: 173P2B.0010
Pressure regulator G1/2", with pneumatically operated

Flow rate curves

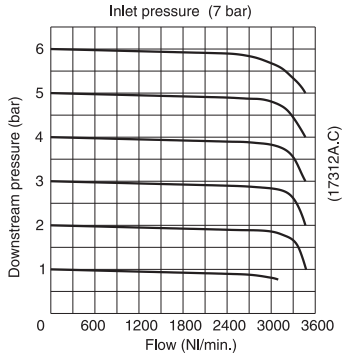

Adjustment characteristics

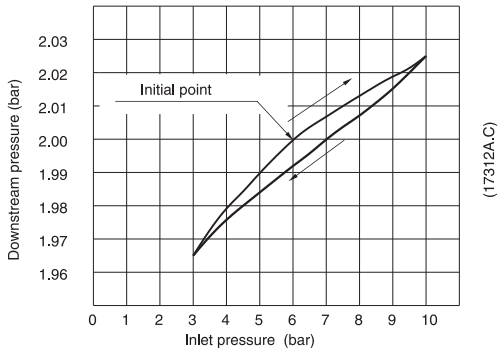

Exhaust flow rate curves

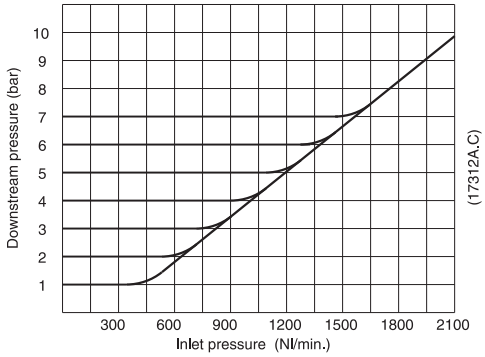

Operating Characteristics

- Accurate capacity to maintain set pressure.
- Sensitivity combined with high relieving rates.
- High flow rate with extremely low pressure drop.
- Two pressure gauge connections with plug complete of seal.
- Once set, a constant bleed of air maintains the accuracy of the regulator. This controlled release is a characteristic, not a fault.

Technical characteristics

Connections	G1/2"
Max working pressure (bar)	10
Temperature °C	-5 °C - 50°C
Pressure gauge connections	G1/8"
Weight	gr. 970
Pressure (bar)	0,1 - 10
Assembly position	Any
Air consumption (Nl/min) (10 bar air supply)	5
Max. fittings torque	40 Nm
Fluid	20μm filtered air preferably not lubricated

Filter (G 3/4")

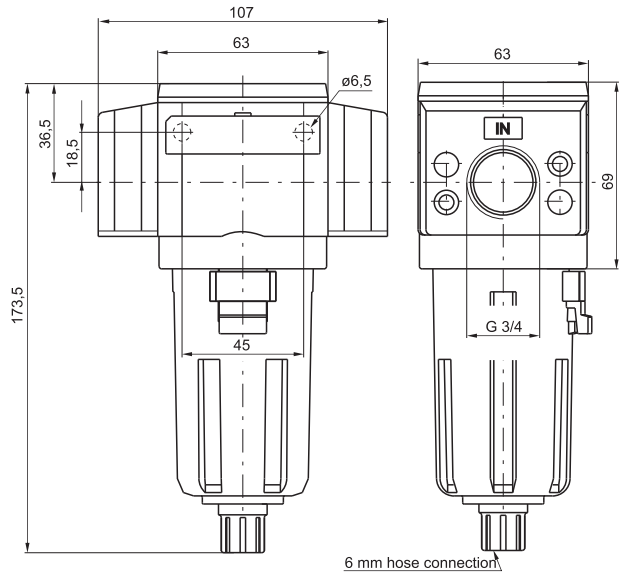

Ordering code

17301E.Ⓢ.Ⓣ

Ⓢ	FILTER PORE SIZE
	A = 5μ
	B = 20μ
	C = 50μ
Ⓣ	TYPE
	S = Automatic drain

Example: 17301E.B
Filter size 3 with G 3/4" connection and filter pore size 20μ.

Flow rate curves

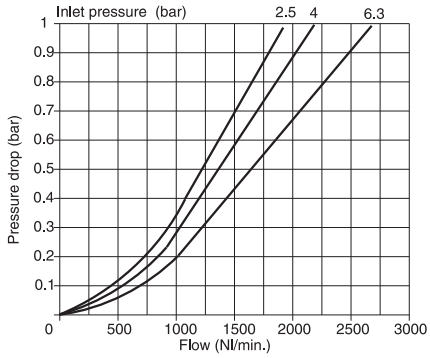

Operating Characteristics

- Body made with light alloy.
- Flanges made with light alloy.
- Wall mounting possibility with M6 screws protected by covers.
- Double filtering action: by air centrifuging and by replaceable and reusable HDPE porous filter element.
- Transparent technopolymer bowl with shock resistant technopolymer protection connected to the body with bayonet cap and safety button.
- Manual and semi-automatic water drain valve; in the semi-automatic version the drainage happens when there is no pressure or by pushing the valve up-wards.
- Possibility to see the water level on 360°.
- Automatic water drainage bowl available on request.

Technical characteristics

Connections	G 3/4"
Max working pressure (bar)	13 bar - 1,3 MPa
Minimum working pressure with automatic drain (bar)	0,5
Maximum working pressure with automatic drain (bar)	10
Temperature °C	-5 °C - 50°C
Weight	gr. 405
Filter pore size	5μ - 20μ - 50μ
Bowl capacity	48 cm³
Assembly position	Vertical
Wall fixing screw	M6
Max. fittings torque	40 Nm

Coalescing filter (G 3/4")

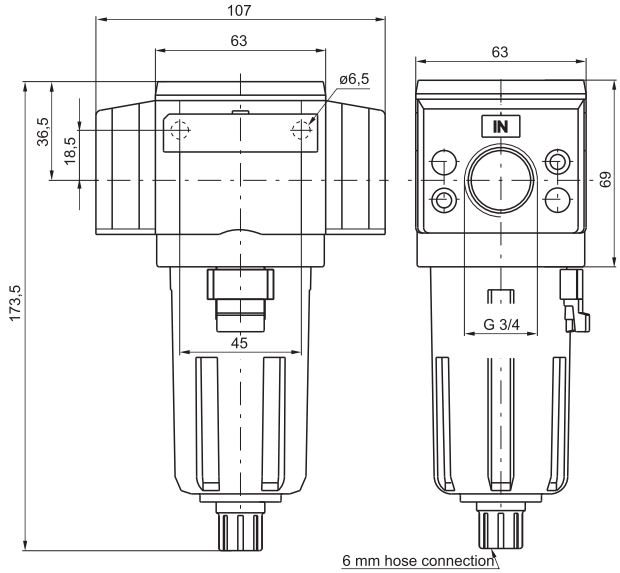

Ordering code

17308E.Ⓔ.Ⓣ

Ⓔ	FILTER EFFICIENCY
	E = 99,97%
Ⓣ	TYPE
	S = Automatic drain

Example: 17308E.E
Coalescing filter size 3 with G 3/4" connections and filter efficiency of 99,97%.

Flow rate curves

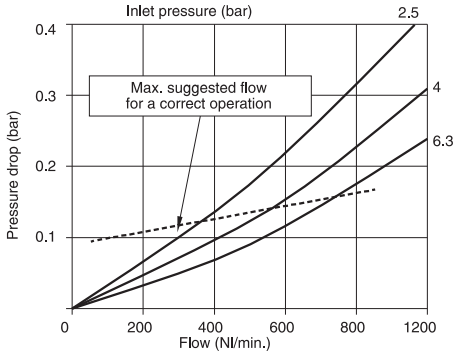

Operating Characteristics

- Coalescing filter element remove 0,01μ particles equivalent to 99,97%.
- Body made with light alloy.
- Flanges made with light alloy.
- Wall mounting possibility with M6 screws protected by covers.
- Transparent technopolymer bowl with shock resistant technopolymer protection connected to the body with bayonet cap and safety button.
- Manual and semi-automatic water drain valve; in the semi-automatic version the drainage happens when there is no pressure or by pushing the valve up-wards.
- Possibility to see the water level on 360° also with bowl protection assembled.
- Automatic water drainage bowl available on request.

Technical characteristics

Connections	G 3/4"
Max working pressure (bar)	13 bar - 1,3 MPa
Minimum working pressure with automatic drain (bar)	0,5
Maximum working pressure with automatic drain (bar)	10
Temperature °C	-5 °C - 50°C
Weight	gr. 405
Filter efficiency with 0,01μ particle	99,97%
Bowl capacity	48 cm³
Assembly position	Vertical
Wall fixing screw	M6
Max. fittings torque	40 Nm

Pressure regulator (G 3/4")

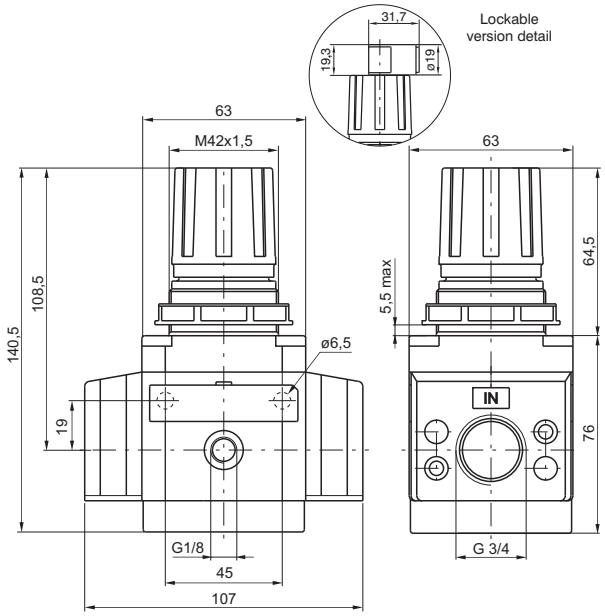

Ordering code

17302E Ⓖ.Ⓣ.Ⓞ

Ⓖ	ADJUSTING RANGE
	A = 0 - 2 bar
	B = 0 - 4 bar
	C = 0 - 8 bar
	D = 0 - 12 bar
Ⓣ	TYPE
	L = without Relieving
	SM = improved relieving
Ⓞ	OPTION
	*Standard
	K = Lockable version

* No additional letters required

Example: 17302E.C
Pressure regulator size 3 with G 3/4" connections, adjusting range 0 - 8 bar with relieving.

Flow rate curves

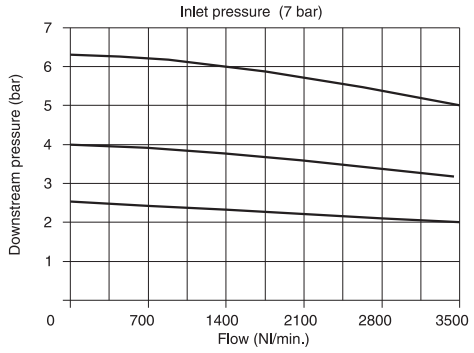

Adjustment characteristics

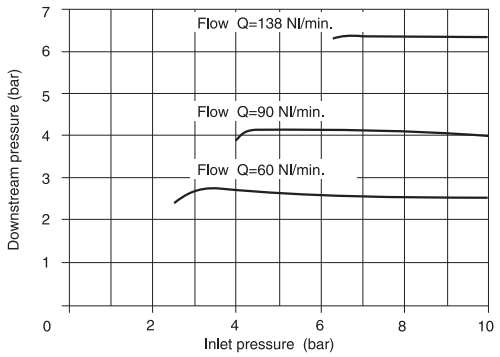

Operating Characteristics

- Diaphragm pressure regulator with relieving.
- Balanced poppet.
- Lockable handle by simply pressing it downwards in the desired position.
- Body made with light alloy.
- Flange made with light alloy
- Wall mounting possibility with M6 screws protected by covers.
- Two pressure gauge connections with plug complete of seal.
- Panel mounting bracket.

Technical characteristics

Connections	G 3/4"
Max working pressure (bar)	13 bar - 1,3 MPa
Temperature °C	-5 °C - 50°C
Pressure gauge connections	G 1/8"
Weight	gr. 550
Pressure range (bar)	0 - 2 / 0 - 4 / 0 - 8 / 0 - 12
Assembly position	Any
Wall fixing screw	M6
Max. fittings torque	40 Nm

Lubricator (G 3/4")

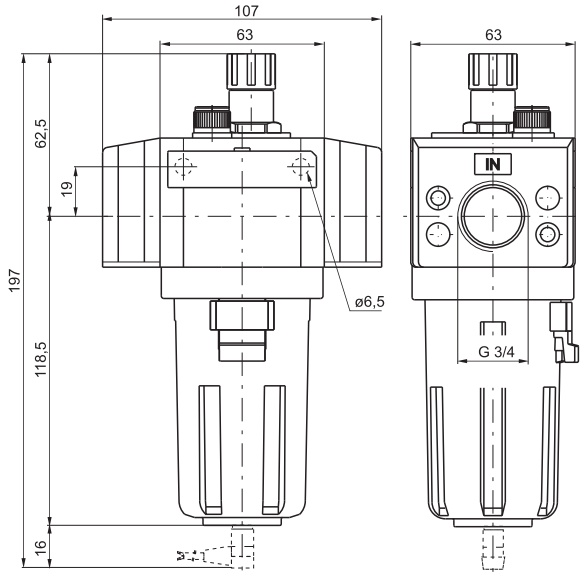

Ordering code
17303E.Ⓣ

	TYPE
Ⓣ	MA = Min. oil level indicator N.O. with plug connector
	MC = Min. oil level indicator N.C. with plug connector

Example: 17303E : Lubricator size 3 with G 3/4" connections.
Note: on the MA version the contact is open when oil is present; on the MC version the contact is closed when oil is present

Flow rate curves

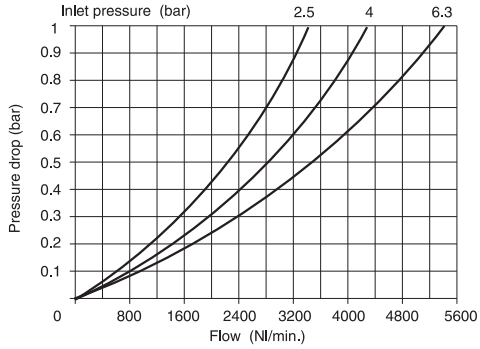

Operating Characteristics

- Fog type lubrication with variable section orifice according to the flow.
- Body made with light alloy.
- Flange made with light alloy.
- Wall mounting possibility with M6 screws protected by covers.
- Transparent technopolymer bowl with shock resistant technopolymer protection.
- Possibility to see the min. and max. level on 360° also with bowl protection assembled.
- Bowl assembled to the body with bayonet cap and safety button.
- Transparent technopolymer sight dome with adjusting handle.
- Oil filling plug.
- Electrical connector for low level indication.
- Use the C1, C2 or C3 lead for connection (see chapter 6 "Sensors").

Technical characteristics

Connections	G 3/4"
Max working pressure (bar)	13 bar - 1,3 MPa
Temperature °C	-5 °C - 50°C
Weight	gr. 435
Indicative oil drop rate	1 drop every 300/600 Nl
Oil type	FD22 - HG32
Bowl capacity	62 cm³
Assembly position	Vertical
Wall fixing screw	M6
Min. operational flow at 6,3 bar	20 Nl/min
Max. fittings torque	40 Nm

Filter - Pressure regulator (G 3/4")

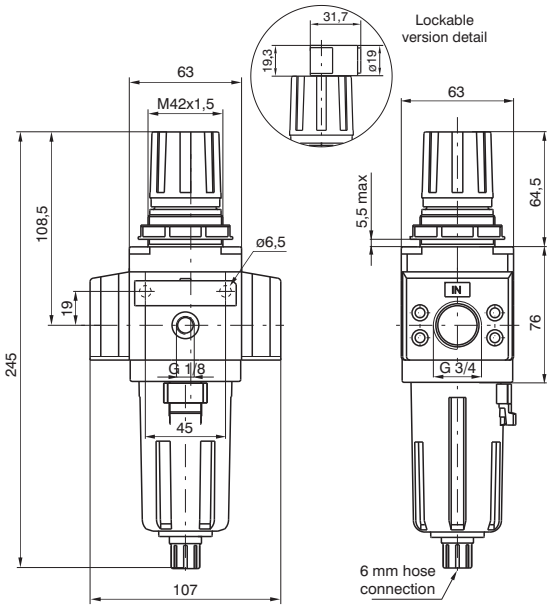

Ordering code

17304E.Ⓢ.Ⓖ.Ⓣ.Ⓞ

Ⓢ	FILTER PORE SIZE
	A = 5μ
	B = 20μ
	C = 50μ
Ⓖ	ADJUSTING RANGE
	A = 0 - 2 bar
	B = 0 - 4 bar
	C = 0 - 8 bar
	D = 0 - 12 bar
Ⓣ	TYPE
	S = Automatic drain
Ⓞ	OPTION
	*Standard
	K = Lockable version

* No additional letters required

Example: 17304E.B.C
Filter - pressure regulator size 3 with G 3/4" connections, filter pore size 20μ and adjusting range 0-8 bar.

Flow rate curves

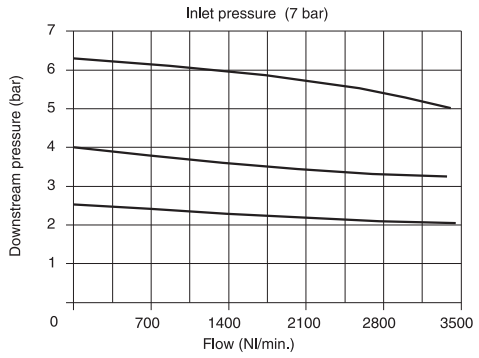

Adjustment characteristics

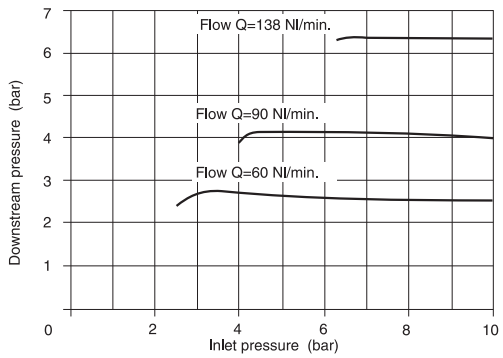

Operating Characteristics

- Filter - diaphragm pressure regulator with relieving.
- Balanced poppet.
- Body made with light alloy.
- Flange made with light alloy.
- Lockable handle by simply pressing it downwards in the desired position.
- Wall mounting possibility with M6 screws protected by covers.
- Double filtering action: by air centrifuging and by replaceable and reusable HDPE porous filter element.
- Transparent technopolymer bowl with shock resistant technopolymer protection connected to the body with bayonet cap and safety button.
- Manual and semi-automatic water drain valve; in the semiautomatic version the drainage happens when there is no pressure or by pushing the valve up-wards.
- Possibility to see the water level on 360° also with bowl protection assembled.
- Automatic water drainage bowl available on request.
- Two pressure gauge connections with plug complete of seal.

Technical characteristics

Connections	G 3/4"
Max working pressure (bar)	13 bar - 1,3 MPa
Minimum working pressure with automatic drain (bar)	0,5
Maximum working pressure with automatic drain (bar)	10
Temperature °C	-5 °C - 50°C
Pressure gauge connections	G 1/8"
Weight	gr. 645
Pressure range (bar)	0 - 2 / 0 - 4 / 0 - 8 / 0 - 12
Filter pore size	5μ - 20μ - 50μ
Bowl capacity	48 cm³
Assembly position	Vertical
Wall fixing screw	M6
Max. fittings torque	40 Nm

Filter pressure regulator + Lubricator (G 3/4")

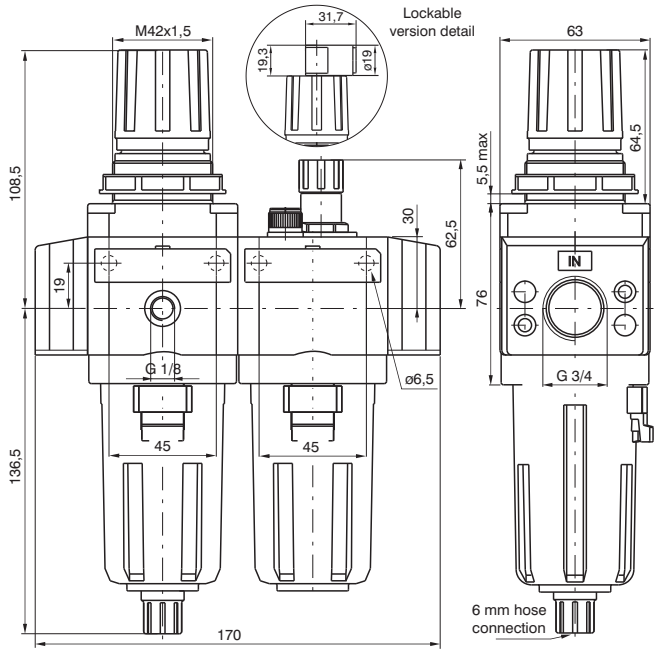

Ordering code

17306E.Ⓢ.Ⓖ.Ⓣ.Ⓞ

Ⓢ	FILTER PORE SIZE
	A = 5μ
	B = 20μ
	C = 50μ
Ⓖ	ADJUSTING RANGE
	A = 0 - 2 bar
	B = 0 - 4 bar
	C = 0 - 8 bar
	D = 0 - 12 bar
Ⓣ	TYPE
	S = Automatic drain
Ⓞ	OPTION
	*Standard
	K = Lockable version

* No additional letters required

Example: 17306E.B.C.S
Service unit combination complete with filter - pressure regulator + lubricator size 3 G 3/4" connection, filter pore size 20μ, adjusting range 0-8 bar and automatic drain.

Flow rate curves

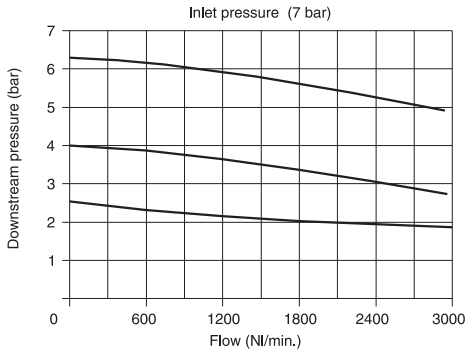

Adjustment characteristics

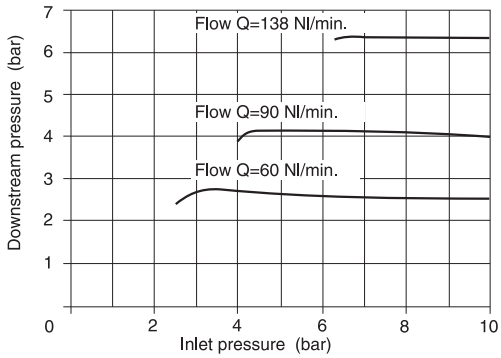

Operating Characteristics

- Filter - diaphragm pressure regulator with relieving.
- Balanced poppet.
- Double filtering action: by air centrifuging and by replaceable and reusable HDPE porous filter element.
- Body made with light alloy.
- Flange made with light alloy.
- Wall mounting possibility with M6 screws protected by covers.
- Lockable handle by simply pressing it downwards in the desired position.
- Transparent technopolymer bowl with shock resistant technopolymer protection connected to the body with bayonet cap and safety button.
- Manual and semi-automatic water drain valve; in the semi-automatic version the drainage happens when there is no pressure or by pushing the valve up-wards.
- Possibility to see the water level on 360° also with bowl protection assembled.
- Automatic water drainage bowl available on request.
- Two pressure gauge connections with plug complete of seal.
- Fog type lubrication with variable section orifice according to the flow.
- Transparent technopolymer sight dome with adjusting handle.
- Oil filling plug.

Technical characteristics

Connections	G 3/4"
Max working pressure (bar)	13 bar - 1,3 MPa
Temperature °C	-5 °C - 50°C
Pressure gauge connections	G 1/8"
Weight	gr. 1100
Pressure range (bar)	0 - 2 / 0 - 4 / 0 - 8 / 0 - 12
Filter pore size	5μ - 20μ - 50μ
Filter bowl capacity	48 cm³
Indicative oil drop rate	1 drop every 300/600 Nl
Oil type	FD22 - HG32
Lubricator bowl capacity	62 cm³
Min. operational flow at 6,3 bar	20 Nl/min.
Assembly position	Vertical
Wall fixing screw	M6
Max. fittings torque	40 Nm

Filter + pressure regulator + Lubricator (G 3/4")

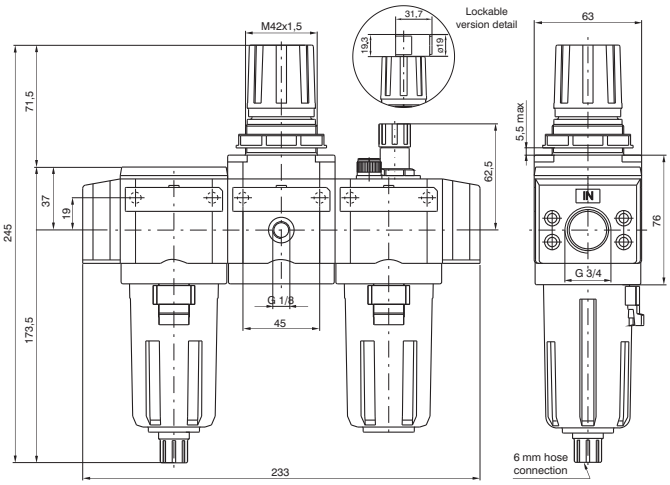

Ordering code

17307E.Ⓢ.Ⓖ.Ⓣ.Ⓞ

Ⓢ	FILTER PORE SIZE
	A = 5μ
	B = 20μ
	C = 50μ
Ⓖ	ADJUSTING RANGE
	A = 0 - 2 bar
	B = 0 - 4 bar
	C = 0 - 8 bar
	D = 0 - 12 bar
Ⓣ	TYPE
	S = Automatic drain
Ⓞ	OPTION
	*Standard
	K = Lockable version

* No additional letters required

Example: 17307E.B.C.S
Service unit combination complete with filter, pressure regulator and lubricator G 3/4" connections, filter pore size 20μ, adjusting range 0-8 bar and automatic drain.

Flow rate curves

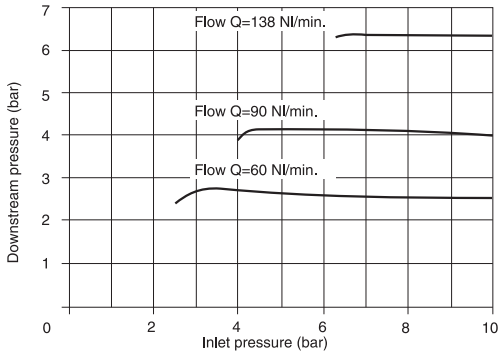

Adjustment characteristics

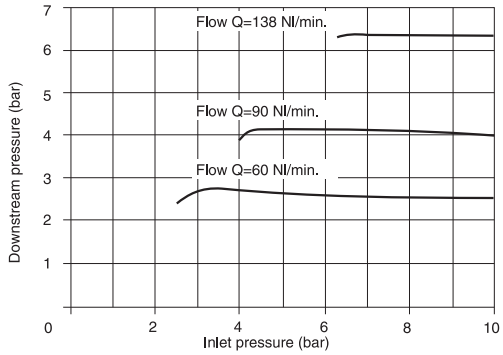

Operating Characteristics

- Filter - diaphragm pressure regulator with relieving and balanced poppet.
- Double filtering action: by air centrifuging and by replaceable and reusable HDPE porous filter element.
- Body made with light alloy.
- Flange made with light alloy.
- Wall mounting possibility with M6 screws protected by covers.
- Pressure adjusting lockable handle by simply pressing it downwards in the desired position.
- Transparent technopolymer bowl with shock resistant technopolymer protection connected to the body with bayonet cap and safety button.
- Manual and semi-automatic water drain valve; in the semi-automatic version the drainage happens when there is no pressure or by pushing the valve up-wards.
- Automatic water drainage bowl available on request.
- Possibility to see the water level on 360° also with bowl protection assembled.
- Two pressure gauge connections with plug complete of seal.
- Fog type lubrication with variable section orifice according to the flow.
- Transparent technopolymer sight dome with adjusting handle.
- Oil filling plug.

Technical characteristics

Connections	G 3/4"
Max working pressure (bar)	13 bar - 1,3 MPa
Temperature °C	-5 °C - 50°C
Pressure gauge connections	G 1/8"
Weight	gr. 1430
Pressure range (bar)	0 - 2 / 0 - 4 / 0 - 8 / 0 - 12
Filter pore size	5μ - 20μ - 50μ
Filter bowl capacity	48 cm³
Indicative oil drop rate	1 drop every 300/600 Nl
Oil type	FD22 - HG32
Lubricator bowl capacity	62 cm³
Min. operational flow at 6,3 bar	20 Nl/min.
Assembly position	Vertical
Wall fixing screw	M6
Max. fittings torque	40 Nm

Pressure Switch complete with adapter

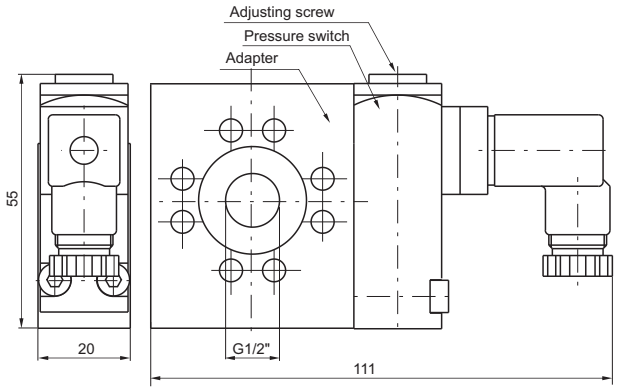

Ordering code	
17Ⓣ	
Ⓣ	TYPE
	34A = Pressure switch adapter
	14B = Pressure switch
	34C = Pressure switch complete with adapter

Example: 1734C
Pressure switch complete with adapter.

Connection

1 = Neutral
2 = N.C contact
3 = N.O contact

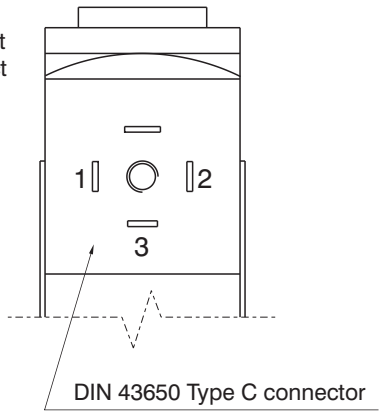

Operating Characteristics

- The pressure switch complete of adapter has to be assembled between two elements of the FRL group.
- It cannot be utilized separately or at the end of the FRL group.
- The pressure switch can be set at desired pressure (Pressure range (bar) from 2 to 10 bar) by rotating the adjusting screw.
- The electrical connection is made by mean of a 15 connector DIN 43650 type C.
- The microswitch contact could be Normally Closed or open (change over switch).

Technical characteristics

Max working pressure (bar)	13 bar - 1,3 MPa
Temperature °C	-5 - + 50
Weight	gr. 220
Microswitch capacity	1A
Microswitch Maximum voltage	250 VAC
Grade of protection (with connector assembled)	IP 65
Pressure range (bar)	2 - 10 bar
Assembly position	Any

Flange G 3/4"

Ordering code	
1738Ⓣ	
Ⓣ	TYPE
	1E = Inlet flange
	2E = Outlet flange

Weight gr. 105

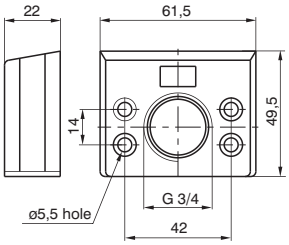

Air Intake

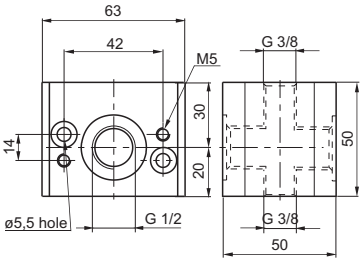

Ordering code
17340

Weight gr. 250

Air Intake - "H" profile

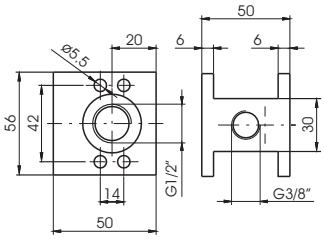

Ordering code
17340H

Weight gr. 192

Fixing bracket

Ordering code

1735Ⓣ

Ⓣ	TYPE
	0 = Standard regulator
	2 = Highsensitive air pressure regulator

Weight gr. 85

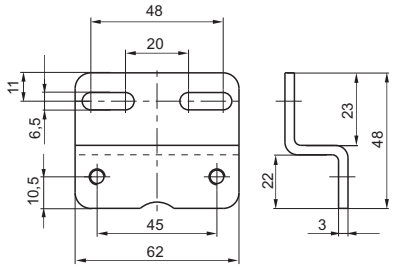

Pressure gauge

Ordering code

17070Ⓥ.Ⓢ

Ⓥ	VERSION
	A = Dial ø40
	B = Dial ø50
Ⓢ	SCALE
	A = Scale 0-4 bar
	B = Scale 0-6 bar
	C = Scale 0-12 bar

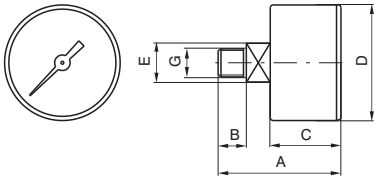

DIMENSIONS

CODE	A	B	C	D	E	G	Weight gr.
17070A	44	10	26	41	14	1/8”	60
17070B	45	10	27	49	14	1/8”	80

Manometer diameter D.23 mm

Ordering code

17070M.Ⓢ

Ⓢ	SCALE
	A = Scale 0-4 bar
	B = Scale 0-6 bar
	C = Scala 0-12 bar

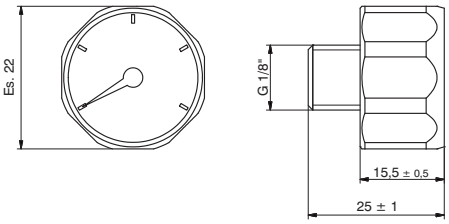

Assembling kit

Ordering code

1736Ⓥ

Ⓥ	VERSION
	0 = Standard
	5 = for progressive start-up valve

Weight gr. 25

Construction and working characteristics

The modular air service units groups of the size 4, as the other size, allow a wide selection of combinations.
The threaded connections are machined directly on the valve body made with light alloy, so that each components can be used individually.
The wall fixing is done directly with screws through the holes on the body they can be wall mounted.
The bowls are made of transparent technopolymer, always supplied with shock resistant technopolymer protection, allowing the moisture and oil level control from any angle.
The filter can be equipped with manual or semiautomatic water drain valve; furthermore it's possible to install the automatic draining device inside the bowl.
The pressure regulator handle is lockable in the desired position.
The lubricator oil flow is adjustable with proper handle and it is visibly checked through the sight dome.
The shut-off valve can be equipped with pad-lock to prevent accidents or damages due to unauthorized operation.
The progressive start-up valve, pneumatically or electropneumatically controlled, allows air supply to the circuit progressively and with adjustable time.

Instruction for installation and operation

Pay attention to install a group or a single component with air flow direction according to the arrows and to the following sequence: filter, pressure regulator, lubricator and with bowls downwards.
Do not exceed the recommended air pressure and temperature limits.
The moisture should not exceed the level marked on the bowl and it can be drawn off and carried away by a flexible tube of Ø 6/4 directly connected to the discharge valve handle.
The pressure should be set from minimum to maximum, rotating the adjusting handle clockwise.
As lubricant, we suggest to use oil class FD22 or HG32. Verify that the lubricator is not fed with a flow lower than the minimum operational.
To set the oil flow rotate the proper adjusting handle in order to get one drop of oil every 300-600 liters of air.
The oil flow will be kept automatically and proportionally to the air flow.
The oil can be refilled by mean of proper plug or directly into the bowl after having de-pressurized the system. Do not exceed the maximum level indicated on the bowl.
For opening the shut-off valve push and rotate clockwise the operating handle. For closing it and consequently discharging the down stream line, rotate the handle counter-clockwise.

Maintenance

Clean the bowls with water and detergent. Do not use alcohol.
The filter element made with HPDE is reusable by blowing and cleaning it with proper detergent. For replacing or cleaning it, remove the bowl and unscrew the baffle spins.
In case it is necessary to replace the lubricator transparent dome, tight it at 5 Nm torque maximum.

Assembling

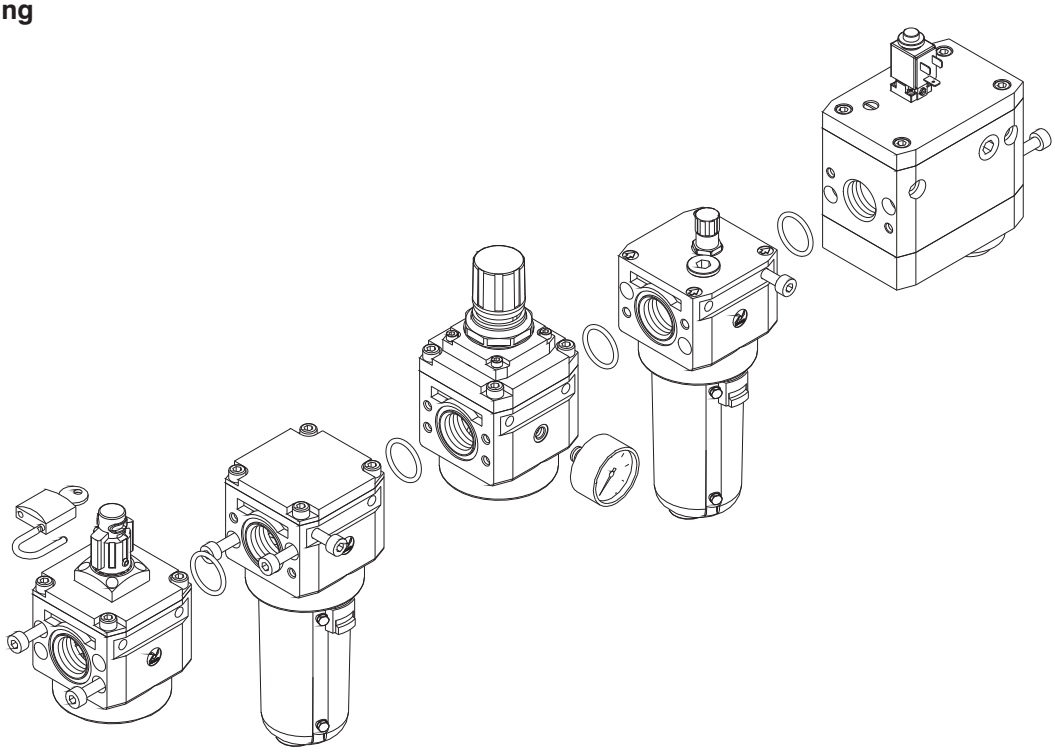

Filter

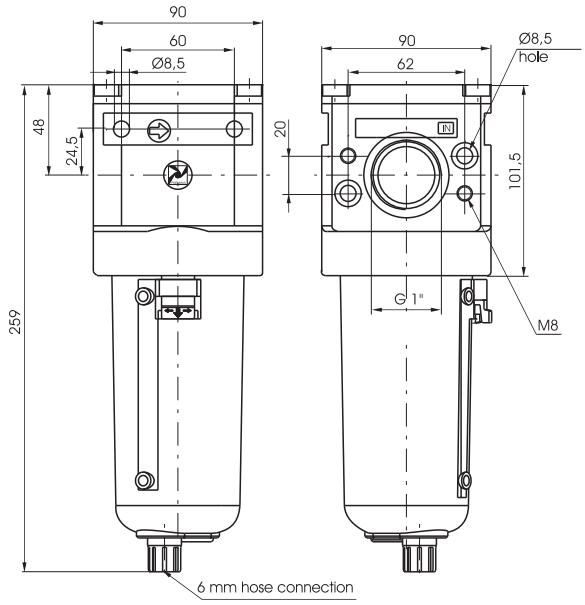

Ordering code

17401B.Ⓢ.Ⓣ

Ⓢ	FILTER PORE SIZE
	A = 5μ
	B = 20μ
	C = 50μ
Ⓣ	TYPE
	S = Automatic drain

Example: 17401B.B
Filter with G 1" connections and filter pore size 20μ.

Flow rate curves

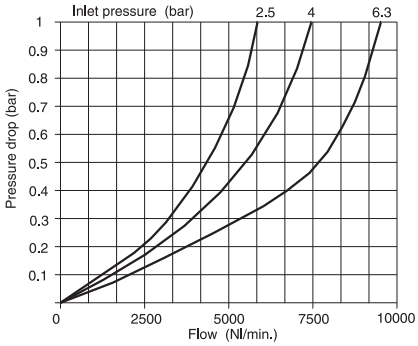

Operational characteristic

- Body made with light alloy.
- Wall mounting possibility with M8 screws protected by covers.
- Double filtering action: by air centrifuging and by replaceable and reusable HDPE porous filter element.
- Light alloy bowl c/w level indicator connected to the body with bayonet cap and safety button.
- Manual and semi-automatic water drain valve; in the semi-automatic version the drainage happens when there is no pressure or by pushing the valve up-wards.
- Automatic water drainage bowl available on request.

Technical characteristic

Connections	G 1"
Max working pressure (bar)	13 bar - 1,3 MPa
Minimum working pressure with automatic drain (bar)	0,5
Maximum working pressure with automatic drain (bar)	10
Temperature °C	50°C
Weight	gr. 1700
Filter pore size	5μ - 20μ - 50μ
Bowl capacity	178 cm³
Assembly position	Vertical
Wall fixing screw	M8

Coalescing filter

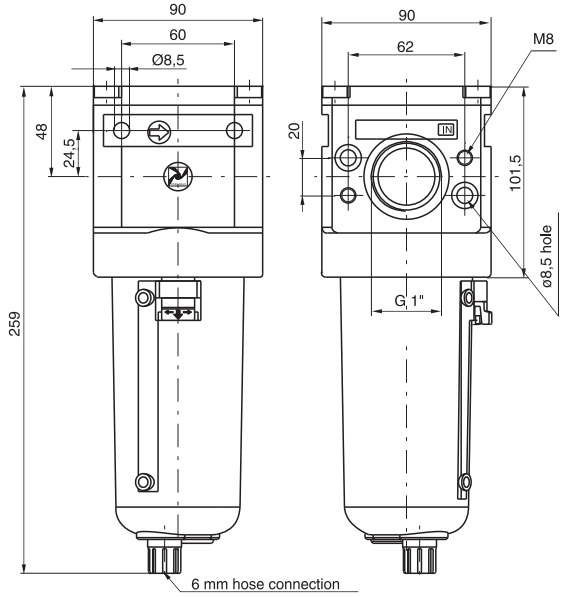

Ordering code

17408B.E.Ⓣ

Ⓣ	TYPE
	S = Automatic drain

Example: 17408B.E
Coalescing filter size 4 with G 1" connections and filter efficiency of 99,97%.

Flow rate curves

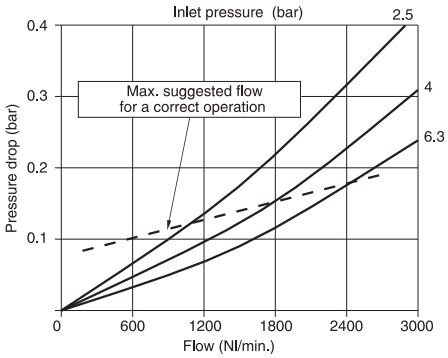

Operational characteristic

- Coalescing filter element remove 0,01μ particles equivalent to 99,97%.
- Body made with light alloy.
- Wall mounting possibility with M8 screws protected by covers.
- Light alloy bowl c/w level indicator connected to the body with bayonet cap and safety button.
- Manual and semi-automatic water drain valve; in the semi-automatic version the drainage happens when there is no pressure or by pushing the valve up-wards.
- Automatic water drainage bowl available on request.

Technical characteristic

Connections	G 1"
Max working pressure (bar)	13 bar - 1,3 MPa
Minimum working pressure with automatic drain (bar)	0,5
Maximum working pressure with automatic drain (bar)	10
Temperature °C	50°C
Weight	gr. 1700
Filter efficiency with 0,01μ particle	99,97%
Bowl capacity	178 cm³
Assembly position	Vertical
Wall fixing screw	M8

Dynamic drier

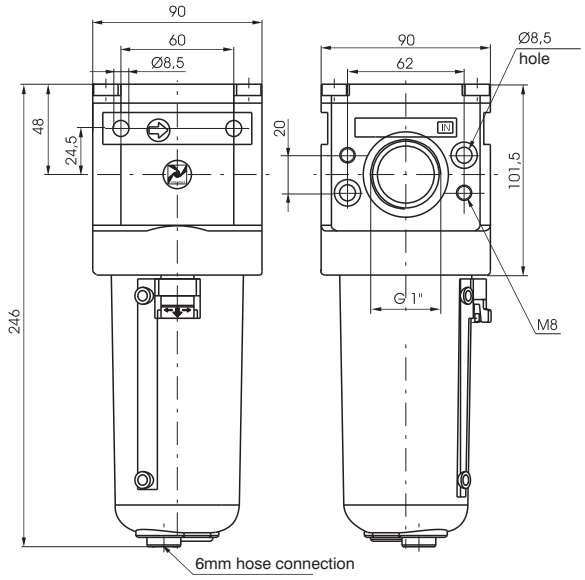

Ordering code

1740EB.Ⓢ.Ⓣ

Ⓢ	FILTER PORE SIZE
	A = 5μ
	B = 20μ
	C = 50μ
Ⓣ	TYPE
	S = Automatic drain

Example: 1740EB.A.S
Dynamic drein size 4 with G 1" connections, filter pore size 20μ and automatic drain.

3

Operational characteristic

- Body made with light alloy.
- Wall mounting possibility with M8 screws.
- Double filtering action: by air centrifuging and by replaceable and reusable HDPE porous filter element.
- Light alloy bowl c/w level indicator connected to the body with bayonet cap and safety button.
- Automatic water drain valve.

Technical characteristic

Connections	G 1"
Max inlet pressure (bar)	13
Flow rate at 6 bar with Δp=1 (Nl/min.)	2500
Bowl capacity (cm³)	160
Max. fittings torque (Nm)	40
Temperature °C	-5 to+50
Weight (g.)	1700
Filter efficiency at flow rate 1500 Nl/min.	96%
Assembly position	Vertical
Wall fixing screw	M8

Pressure regulator

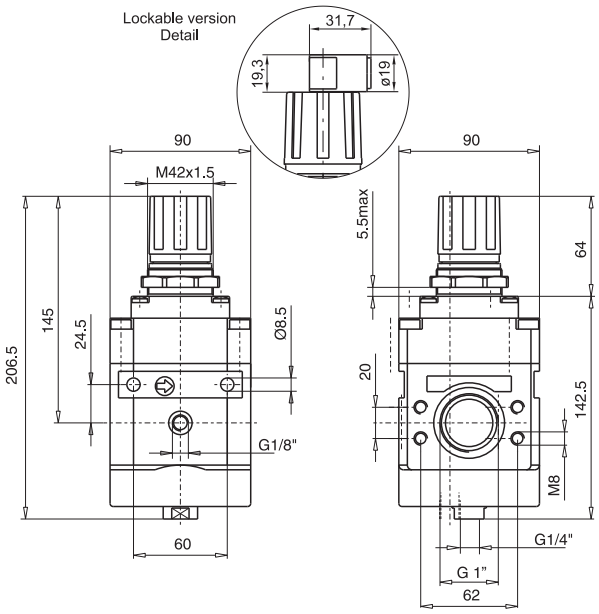

Ordering code

17402NB.Ⓖ.Ⓞ

Ⓖ	ADJUSTING RANGE
	A = 0 - 2 bar
	B = 0 - 4 bar
	C = 0 - 8 bar
	D = 0 - 12 bar
Ⓞ	OPTION
	=Standard (without options)
	K = Lockable version

Example: 17402NB.C
Pressure regulator with G 1" connections, adjusting range 0 - 8 bar with relieving.

Flow rate curves

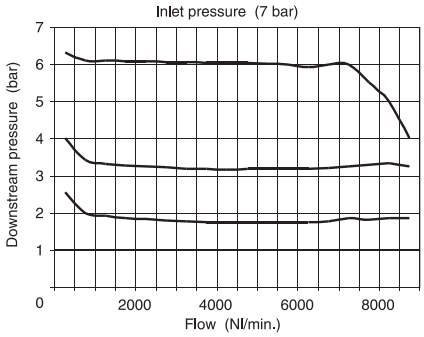

Adjustment characteristics

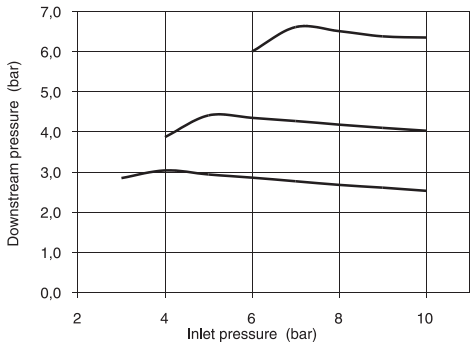

Operational characteristic

- Sensitivity combined with high relieving rates.
- High flow rate with extremely low pressure drop.
- Body made with light alloy.
- Two pressure gauge connections with plug complete of seal.
- Ring nut for panel mounting.

Technical characteristic

Connections	G 1"
Max working pressure (bar)	13 bar - 1,3 MPa
Temperature °C	50°C
Pressure gauge connections	G 1/8"
Weight	gr. 1900
Pressure range (bar)	0 - 2 / 0 - 4 / 0 - 8 / 0 - 12
Assembly position	Any
Wall fixing screw	M8

Piloted pressure regulator

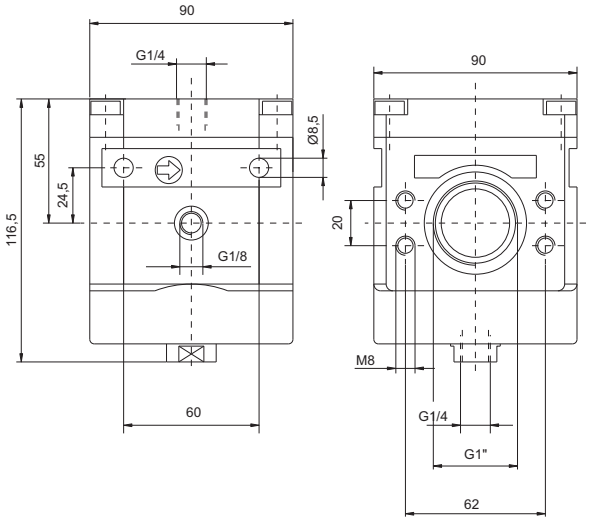

Ordering code

17402NB.P

Example: 17402NB.C
Piloted pressure regulator with G 1" connection and adjusting range 0 - 8 bar with relieving

Flow rate curves

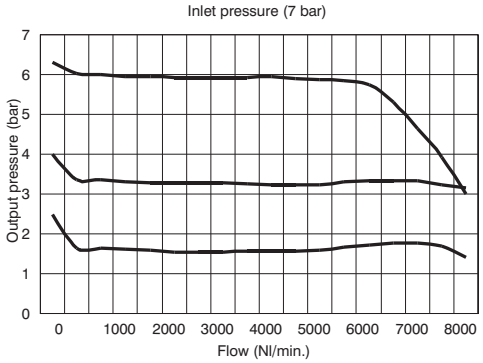

Adjustment characteristics

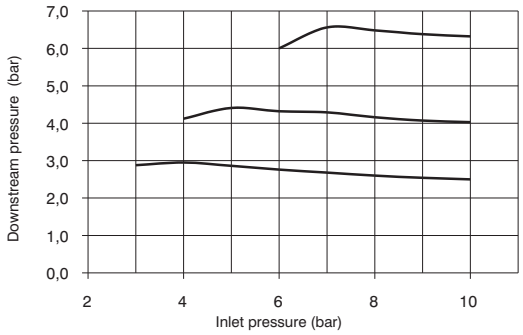

Piloting curves

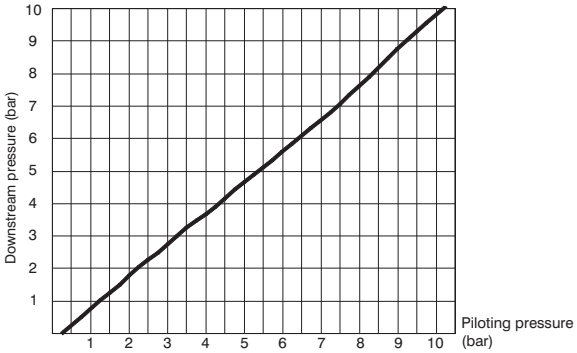

Operational characteristic

- Sensitivity combined with high relieving rates.
- High flow rate with extremely low pressure drop.
- Body made with light alloy.
- Two pressure gauge connections with plug complete of seal.
- Ring nut for panel mounting.

Technical characteristic

Connections	G 1"
Max working pressure (bar)	13 bar - 1,3 MPa
Temperature °C	50°C
Pressure gauge connections	G 1/8"
Weight	gr. 1638
Assembly position	Any
Wall fixing screw	M8

Lubricator

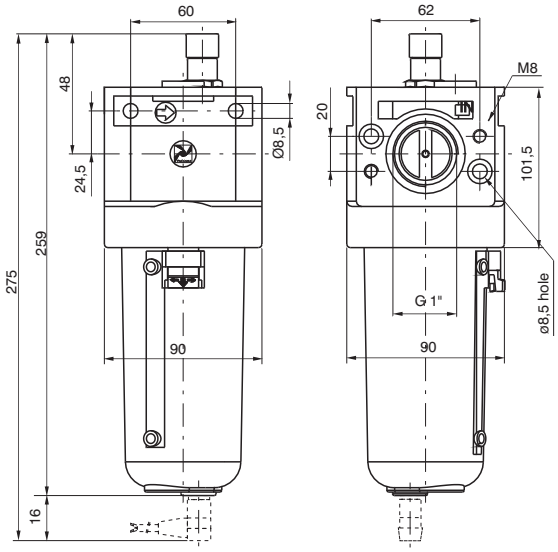

Ordering code

17403B.Ⓣ

Ⓣ	TYPE
	MA = Min. oil level indicator N.O. with plug connector
	MC = Min. oil level indicator N.C. with plug connector

Example: 17403B
Lubricator size 4 with G 1" connections.
Note: on the MA version the contact is open when oil is present; on the MC version the contact is closed when oil is present

Flow rate curves

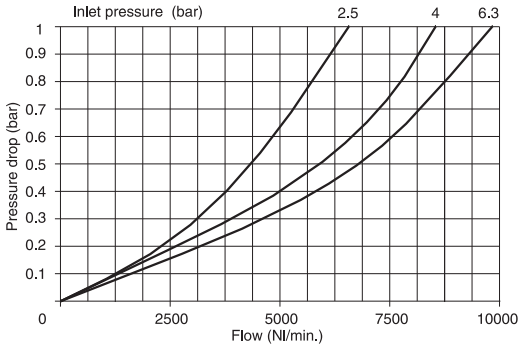

Operational characteristic

- Fog type lubrication with variable section orifice according to the flow.
- Body made with light alloy.
- Wall mounting possibility with M8 screws protected by covers.
- Light alloy bowl c/w level indicator connected to the body with bayonet cap and safety button.
- Transparent technopolymer sight dome with adjusting handle.
- Oil filling plug.
- Electrical connector for low level indication. Use the C1, C2 or C3 lead for connection (see section 6 "Sensor").

Technical characteristic

Connections	G 1"
Max working pressure (bar)	13 bar - 1,3 MPa
Temperature °C	50°C
Weight	gr. 1500
Indicative oil drop rate	1 drop every 300/600 Nl
Oil type	FD22 - HG32
Bowl capacity	300 cm³
Assembly position	Vertical
Wall fixing screw	M8
Min. operational flow at 6,3 bar	100 Nl/min

Progressive start-up valve

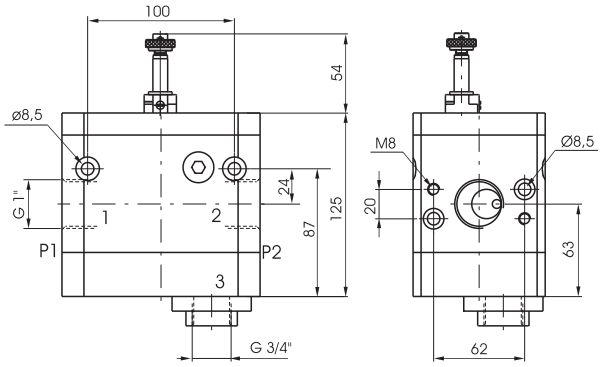

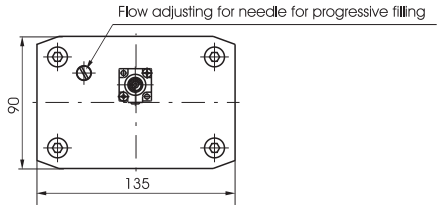

Ordering code

174T

T	TYPE
	10.M2 = Electric control complete wih M2 mechanic (see page 2.13)
	20 = with pneumatic control

Operational characteristic

- 3 way valve with double poppet.
- Possibility to adjust the down stream circuit filling time by the enclosed adjustable metering screw.
- Quick down stream circuit discharge.
- Possibility for a pneumatic or electric piloting control.
- Body made with anodized 2011 aluminum alloy.
- Wall mounting possibility with M8 screws.

Technical characteristic

Connections	G 1"
Max working pressure (bar)	10 bar - 1 MPa
Temperature °C	50°C
Weight	gr. 2300
Assembly position	Any
Wall fixing screw	M8
Min. working pressure	2,5 bar - 0,25 MPa
Nominal flow at 6 bar with Δp=1	8000 Nl/min.
Flow with adjustable metering screw fully open	3000 Nl/min.

Shut-off valve

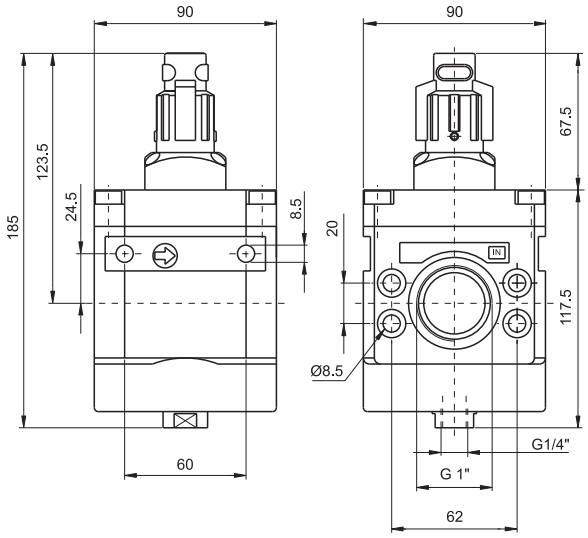

Ordering code

17430.T

T	TYPE
	A = Not lockable handle
	B = Lockable handle

Example: 17430.B
Shut-off valve size 4 complete with lockable handle.
Important note: the preventive or programmed maintenance of this product is not foreseen considering the elaborated assembling and the specific PNEUMAX testing; therefore, call the producer or its representative in case of necessity.

Operational characteristic

- 3 ways poppet valve.
- Body made with light alloy.
- Wall mounting possibility with M8 screws protected by covers.
- Double action handle for valve opening: pushing and rotating (clockwise).
- Simple rotate the valve handle counter clockwise for valve closing and down stream circuit discharging.
- Possibility to lock the valve in the discharging position by fitting in a padlock in the proper seat.

Technical characteristic

Connections	G 1"
Max working pressure (bar)	10 bar - 1 MPa
Temperature °C	50°C
Weight	gr. 1600
Assembly position	Any
Nominal flow at 6 bar with Δp=1	8000 Nl/min.
Wall fixing screw	M8
Handle opening and closing angle	90°

Filter + Pressure regulator + Lubricator

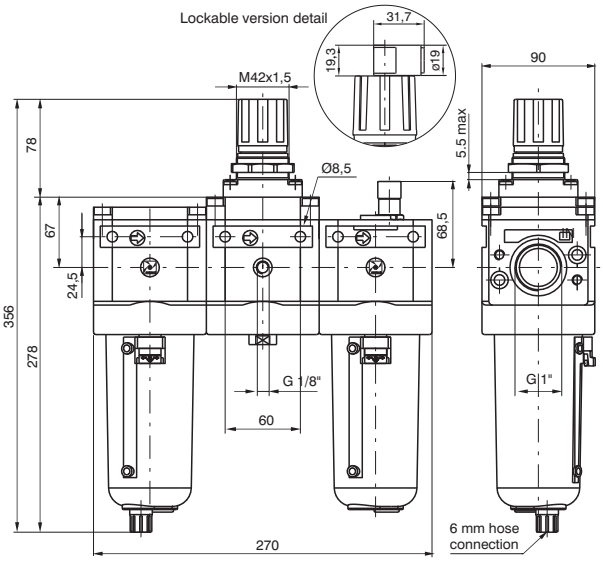

Ordering code

17407NB.Ⓢ.Ⓖ.Ⓣ.Ⓞ

Ⓢ	FILTER PORE SIZE
	A = 5μ
	B = 20μ
	C = 50μ
Ⓖ	ADJUSTING RANGE
	A = 0 - 2 bar
	B = 0 - 4 bar
	C = 0 - 8 bar
	D = 0 - 12 bar
Ⓣ	TYPE
	S = Automatic drain
Ⓞ	OPTION
	=Standard (without options)
	K = Lockable version

Operational characteristic

- Filter - diaphragm pressure regulator with relieving with balanced poppet.
- Double filtering action: by air centrifuging and by replaceable and reusable HDPE porous filter element.
- Body made with light alloy.
- Wall mounting possibility with M8 screws protected by covers.
- Pressure adjusting lockable handle by simply pressing it downwards in the desired position
- Light alloy bowl c/w level indicator connected to the body with bayonet cap and safety button.
- Manual and semi-automatic water drain valve; in the semi-automatic version the drainage happens when there is no pressure or by pushing the valve up-wards.
- Automatic water drainage bowl available on request.
- Two pressure gauge connections with plug complete of seal.
- Fog type lubrication with variable section orifice according to the flow.
- Transparent technopolymer sight dome with adjusting handle.
- Oil filling plug.

Technical characteristic

Connections	G 1"
Max working pressure (bar)	13 bar - 1,3 MPa
Temperature °C	50°C
Pressure gauge connections	G 1/8"
Weight	gr. 5300
Pressure range (bar)	0 - 2 / 0 - 4 / 0 - 8 / 0 - 12
Filter pore size	5μ - 20μ - 50μ
Bowl capacity	178 cm³
Indicative oil drop rate	1 drop every 300/600 Nl
Oil type	FD22 - HG32
Bowl capacity	300 cm³
Assembly position	Vertical
Wall fixing screw	M8
Min. operational flow at 6,3 bar	100 Nl/min

3

Pressure Switch complete with adapter

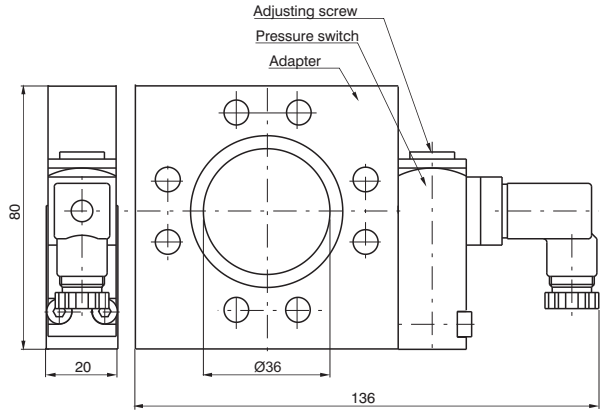

Ordering code

17Ⓣ

Ⓣ	TYPE
	44A = Pressure switch adapter
	14B = Pressure switch
	44C = Pressure switch complete with adapter

Example: 1744C
Pressure switch complete with adapter.

Connection

1 = Neutral
2 = N.C contact
3 = N.O contact

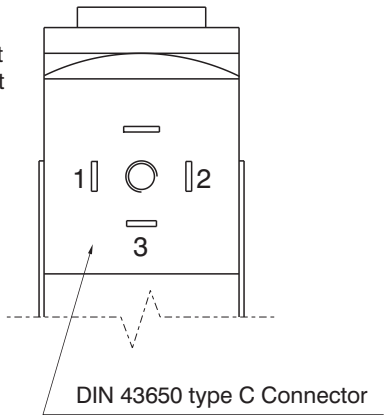

Operational characteristic

- The pressure switch complete of adapter has to be assembled between two elements of the FRL group.
- It cannot be utilized separately or at the end of the FRL group.
- The pressure switch can be set at desired pressure (Pressure range (bar) from 2 to 10 bar) by rotating the adjusting screw.
- The electrical connection is made by mean of a 15 mm connector DIN 43650 type C.
- The microswitch contact could be Normally Closed or open (change over switch).

Technical characteristic

Max working pressure (bar)	13 bar - 1,3 MPa
Temperature °C	50°C
Weight	gr. 450
Microswitch capacity	1A
Microswitch Maximum voltage	250 VAC
Grade of protection (with connector assembled)	IP 65
Pressure range (bar)	2 - 10 bar
Assembly position	Any

Air Intake

Ordering code

17440

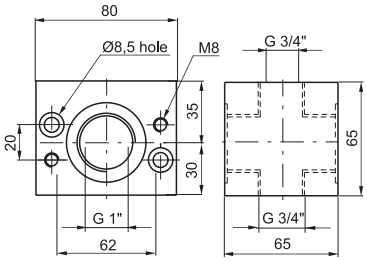

Pressure gauge

Ordering code

17070Ⓥ.Ⓢ

Ⓥ	VERSION
	A = Dial ø40
	B = Dial ø50
Ⓢ	SCALE
	A = Scale 0-4 bar
	B = Scale 0-6 bar
	C = Scale 0-12 bar

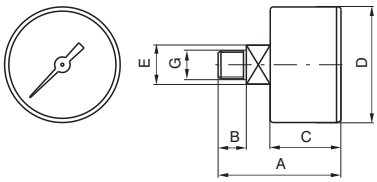

DIMENSIONS

CODE	A	B	C	D	E	G	Weight gr.
17070A	44	10	26	41	14	1/8”	60
17070B	45	10	27	49	14	1/8”	80

Manometer diameter D. 23

Ordering code	
17070M.Ⓢ	
Ⓢ	SCALE
	A = Scale 0-4 bar
	B = Scale 0-6 bar
	C = Scale 0-12 bar

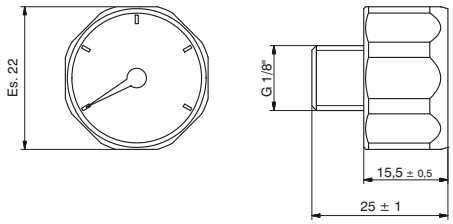

Assembling kit

Ordering code	
1746Ⓥ	
Ⓥ	VERSION
	0 = Standard
	5 = for progressive start-up valve

3

General

The new stainless SS1700 air treatment series was created and developed specifically for the Oil & Gas and for all applications that require excellent corrosion resistance because of chemical and/or environmental corrosion.
All external and internal parts (except for the automatic exhaust version), are made of AISI 316L stainless steel conforming to NACE standard MR0175 / ISO 15156/1. The product range includes a FILTER, with filter elements of up to 3 filtration levels (5µm, 20µm, 50µm), available in AISI316 stainless steel or HDPE (high density polyethylene), and manual or automatic condensed exhaust; the PRESSURE REGULATOR is supplied in a series with low hysteresis rolling diaphragm and an over-pressure exhaust valve (RELIEVING), available in 4 different adjustment ranges from 0 to 12 bar. Finally, the FILTER-REGULATOR range, which combines the features of a filter and pressure regulator into a single component: The "CLEAN PROFILE" versions are available in all sizes, featuring a glossy finish on the exterior surfaces. Here, the over-pressure exhaust hole (RELIEVING) has a 1/8-NPT threading, and is protected by an AISI 316 sintered filter series. In CLEAN PROFILE versions, however, this is a simple hole without a thread.

Construction and functional features

Body, cup and adjustment mechanism	AISI 316L stainless steel
Caseback regulator	AISI 316L stainless steel
Adjustment screw, locking nut and fastening screws	AISI 316L stainless steel (stainless steel A4-70)
Internal components	AISI 316L stainless steel
Filtering elements	AISI 316 stainless steel or HDPE (High density polyethylene)
Spring	AISI 316 stainless steel
Seals	NBR (Standard version and Automatic exhaust) FPM - HNBR (H versions) NBR for low temperatures (L versions) EPDM-FDA (EF versions) Silicone - PU (Z versions)
Automatic drain	brass, stainless steel AISI 304 and AISI 302, sintered bronze acetal resin , NBR, FPM

Terms of use

Fluid	Filtered air, lubricated or non-lubricated (if lubricated, the lubrication must be continuous). Inert gases Natural gases
Temperature	-30°C - +70°C (standard version) -50°C - +70°C (low temperature (L) version) -60°C ÷ +70°C (low temperature (Z) version -60 °C) -5°C - +150°C (high temperature (H) version) -5°C - +50°C (automatic exhaust version) -40°C - +100°C (EPDM-FDA version)
Maximum working pressure	20bar (standard, low and high temperature versions) 16bar (automatic exhaust version)

Instructions for installation and use

Install the product as close to the point of use as possible. Observe the flow direction following the direction of the (arrow) located in front of the body. Place the cup equipped elements in a vertical position, keeping the condensed exhaust tap pointing downwards.
Use the devices within the temperature and pressure limits. In the regulator, the pressure must always be adjusted upwards and, for greater accuracy and sensitivity, it is recommended to use a reducer with a pressure range closest to the desired pressure.
The condensed exhaust in the manual version can only occur in the absence of pressure. To discharge liquid, turn the tap clockwise until the discharge of liquid is triggered, then tighten it all the way.

The maintenance

of filter elements and filter regulators is reusable through blowing and/or washing, and is made of stainless steel or HDPE (high density polyethylene). To replace, remove the cup, loosen the set screw of the support and replace the filter element with a new or refurbished one. Replace the regulator diaphragm whenever the performance is no longer correct or if there is a continuous discharge from the relieving hole (over-pressure exhaust). Fully discharge the adjustment spring before removing the adjustment mechanism. For other maintenance requirements, given the complexity of assembly and the need for a **PNEUMAX** testing, it is recommended that you contact the manufacturer.

Certifications available

: CE Ex **II 2 GD c IIC** [CE Ex **II 2G Ex h IIC Gb** / CE Ex **II 2D Ex h IIIC Db**]

: Suitable up to SIL 3

: CU - TR 012

Filter

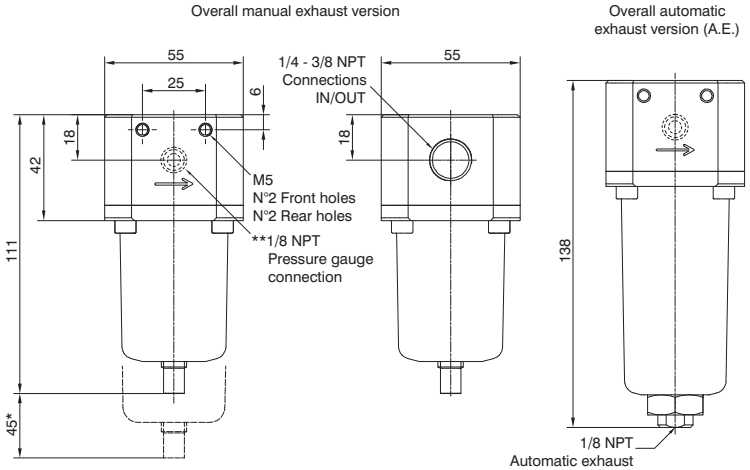

* = BOWL REMOVAL MAXIMUM HEIGHT
** = ONLY FOR VERSION WITH PRESSURE GAUGE CONNECTION

Ordering code

S V 172 C F S O Z

V	VERSION
	S = Standard surface finishing
	F = Clean profile
C	CONNECTIONS
	A = 1/4 NPT
	B = 3/8 NPT
	C = G1/4"
S	FILTER PORE SIZE
	A = 5 μm - 316 stainless steel
	B = 20 μm - 316 stainless steel
	C = 50 μm - 316 stainless steel
	D = 5 μm - HDPE
	E = 20 μm - HDPE
	F = 50 μm - HDPE
O	OPTIONS
	= Standard*
	L= Low temperature
	Z = Low temperature (-60 °C)
	H= High temperature
	S= Automatic exhaust
	EF= EPDM-FDA
Z	ENCLOSURE OPTIONS
	= Standard*
	G= pressure gauge connection

* no additional letter required

Operational characteristics

- Body, cup and internal components in AISI 316L stainless steel.
- A4 (AISI 316) Stainless steel fixing screws.
- Manual or automatic condensed exhaust

Technical characteristics

Maximum inlet pressure (Standard version)	20 bar
Maximum inlet pressure (Automatic exhaust version)	16 bar
Temperature (Standard version)	-30 °C - +70 °C
Temperature (Low temperature version)	-50 °C - +70 °C
Temperature (Low temperature version -60 °C)	-60 °C - +70 °C
Temperature (High temperature version)	-5 °C - +150 °C
Temperature (Automatic exhaust version)	-5 °C - +50 °C
Temperature (EPDM-FDA version)	-40 °C - +100 °C
Weight	1070 (gr.)
Maximum condense capacity	15 cm^3
Assembly position	Vertical

Flow rate curves

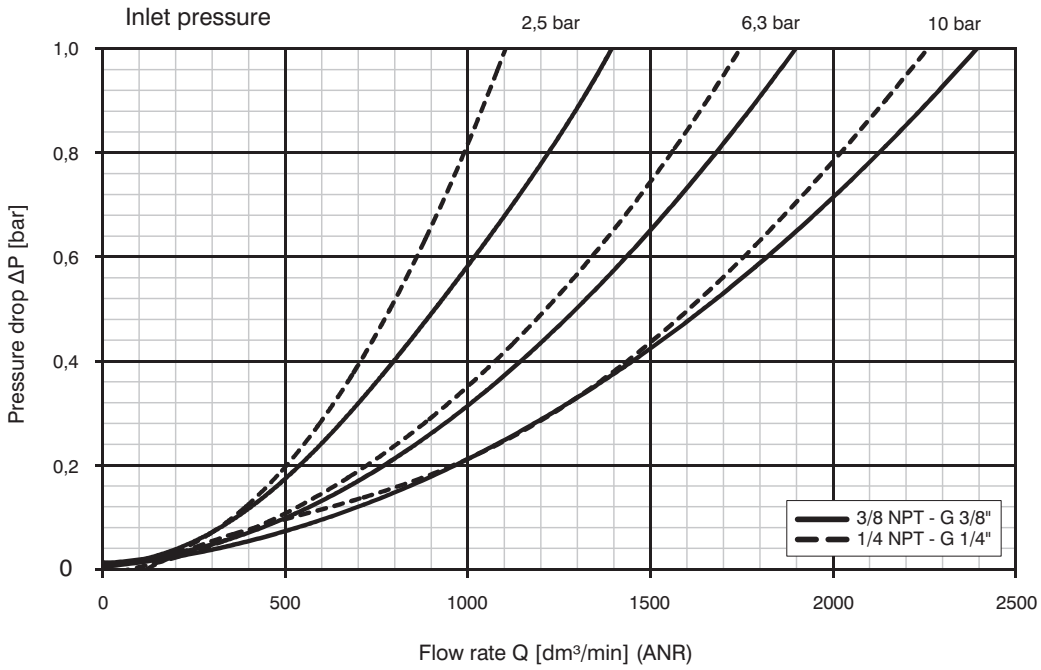

Regulator

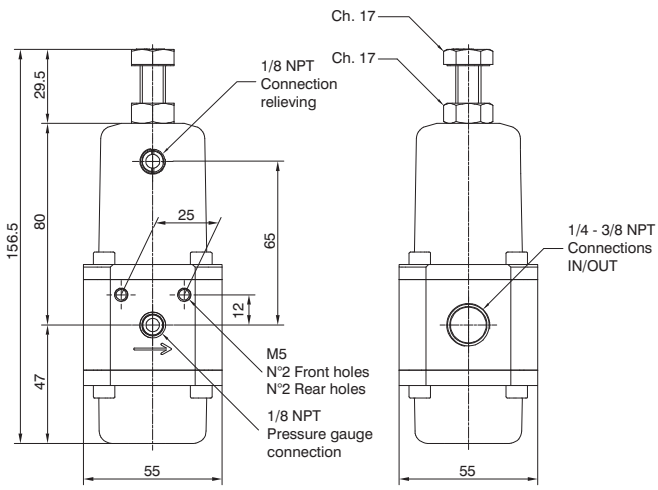

Ordering code

S Ⓥ 172 Ⓒ R Ⓖ Ⓣ Ⓞ

Ⓥ	VERSION
	S = Standard surface finishing
	F = Clean profile
Ⓒ	CONNECTIONS
	A = 1/4 NPT
	B = 3/8 NPT
	C = G1/4"
Ⓖ	ADJUSTING RANGE
	A = 0-2 bar
	B = 0-4 bar
	C = 0-8 bar
	D = 0-12 bar
Ⓣ	TYPE
	= Standard*
	N= Without relieving
Ⓞ	OPTIONS
	= Standard*
	L= Low temperature
	Z = Low temperature (-60 °C)
	H= High temperature
	EF= EPDM-FDA

* no additional letter required

Operational characteristics

- Body, adjust. mechanism, AISI 316L stainless steel and caseback inter. components
- AISI 316 Adjustment springs.
- Fixing screws, adjustment screws and locknut in A4 (AISI 316) stainless steel.
- Pressure regulator diaphragm with over-pressure exhaust (Relieving).
- Low hysteresis rolling diaphragm.
- Balanced system.

Note

The pressure must be always regulating while increasing. For a more precise regulation and higher sensibility, the use of a regulator with a pressure range as close as possible to the regulated pressure is recommended.

Technical characteristics

Maximum inlet pressure (Standard version)	20 bar
Temperature (Standard version)	-30 °C - +70 °C
Temperature (Low temperature version)	-50 °C - +70 °C
Temperature (Low temperature version -60 °C)	-60 °C - +70 °C
Temperature (High temperature version)	-5 °C - +150 °C
Temperature (EPDM-FDA version)	-40 °C - +100 °C
Pressure gauge connections	1/8 NPT
Weight	1270 (gr.)
Assembly position	Indifferent

Flow rate curves

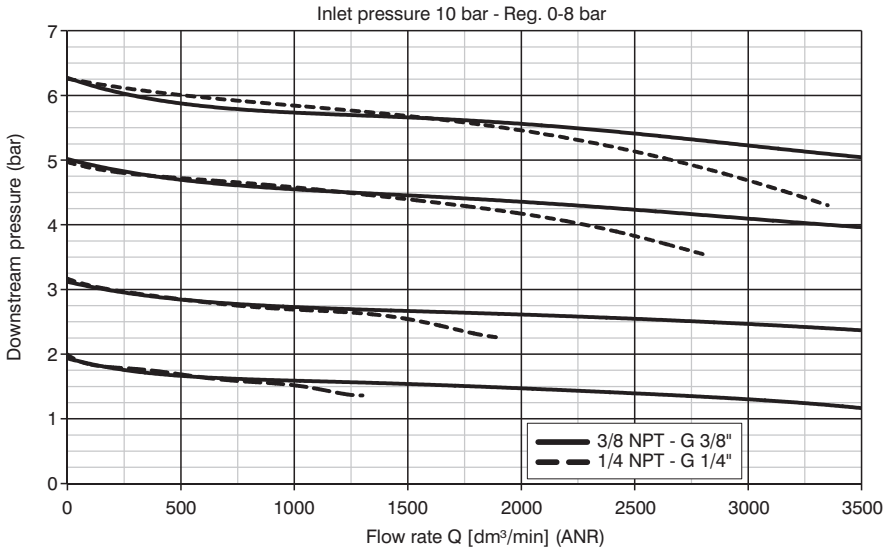

The Steel Line Series regulators are designed to withstand a maximum inlet pressure **at 60 bar**.
However the units is designed to regulater to a maximum of 20 bar.
Note the progress of the maximum regulated pressure as a function of the inlet pressure shown in the graph alongside.

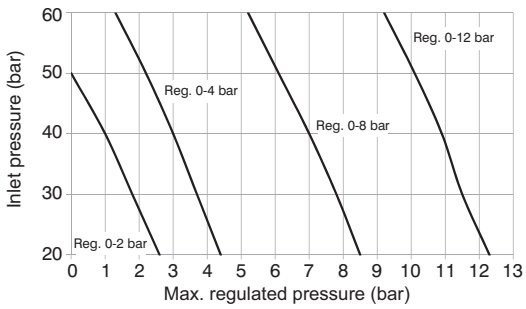

Filter - regulator

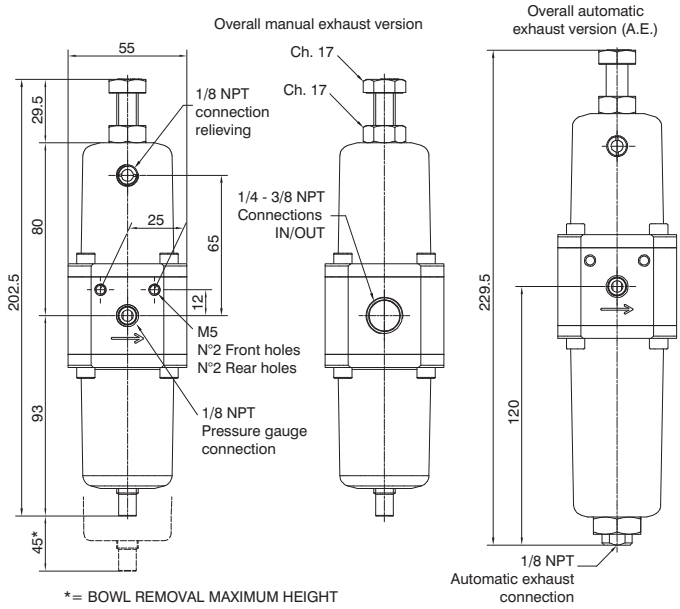

Ordering code

S V 172 C E S G T O

V	VERSION
	S = Standard surface finishing
	F = Clean profile
C	CONNECTIONS
	A = 1/4 NPT
	B = 3/8 NPT
	C = G1/4"
S	FILTER PORE SIZE
	A = 5 μm - 316 stainless steel
	B = 20 μm - 316 stainless steel
	C = 50 μm - 316 stainless steel
	D = 5 μm - HDPE
	E = 20 μm - HDPE
	F = 50 μm - HDPE
G	ADJUSTING RANGE
	A = 0-2 bar
	B = 0-4 bar
	C = 0-8 bar
	D = 0-12 bar
T	TYPE
	= Standard*
	N= Without relieving
O	OPTIONS
	= Standard*
	L= Low temperature
	Z = Low temperature (-60 °C)
	H= High temperature
	S= Automatic drain
	EF= EPDM-FDA

* no additional letter required

Operational characteristics

- Body, adjust. mechanism, AISI 316L stainless steel and caseback inter. components
- AISI 316 Adjustment springs.
- Fixing screws, adjustment screws and locknut in A4 (AISI 316) stainless steel.
- Filter-pressure regulator diaphragm with over-pressure exhaust (Relieving).
- Low hysteresis rolling diaphragm.
- Balanced system.
- Manual or automatic condensed exhaust.

Note

The pressure must be always regulating while increasing. For a more precise regulation and higher sensibility, the use of a regulator with a pressure range as close as possible to the regulated pressure is recommended.

Technical characteristics

Maximum inlet pressure (Standard version)	20 bar
Maximum inlet pressure (Automatic exhaust version)	16 bar
Temperature (Standard version)	-30 °C - +70 °C
Temperature (Low temperature version)	-50 °C - +70 °C
Temperature (Low temperature version -60 °C)	-60 °C - +70 °C
Temperature (High temperature version)	-5 °C - +150 °C
Temperature (Automatic exhaust version)	-5 °C - +50 °C
Temperature (EPDM-FDA version)	-40 °C - +100 °C
Pressure gauge connections	1/8 NPT
Weight	1470 (gr.)
Max. bowl capacity	15 cm^3
Assembly position	Vertical

Flow rate curves

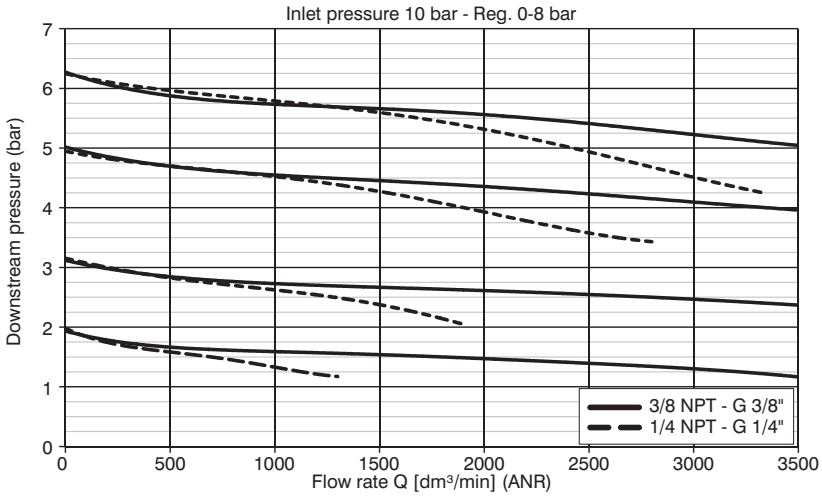

The Steel Line Series regulators are designed to withstand a maximum inlet pressure **at 60 bar**.
However the units is designed to regulate to a maximum of 20 bar.
Note the progress of the maximum regulated pressure as a function of the inlet pressure shown in the graph alongside.

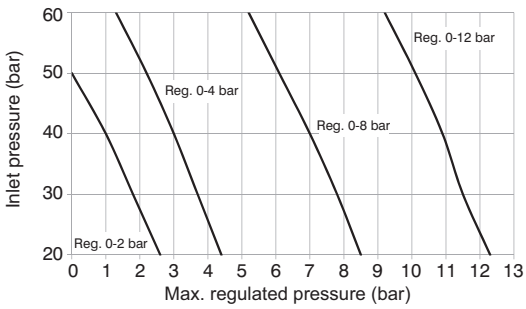

Fixing bracket

Ordering code
SS17250

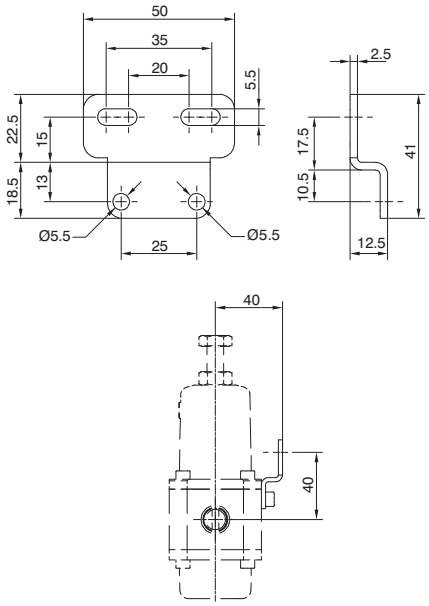

Weight 32 gr.
AISI 316L stainless steel material.
Allows wall fixing of individual products.

Pressure gauge

Ordering code	
SS17070A Ⓢ	
Ⓢ	SCALE
	A = 0 - 4 bar
	B = 0 - 12 bar

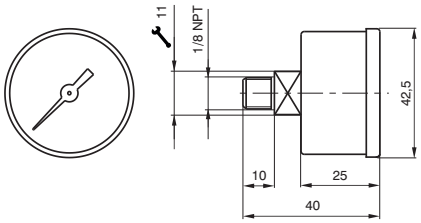

Weight 60 gr.
AISI 316 stainless steel material.
Glass transparent part with an AISI 316 stainless steel retaining ring.
Available with 0-4 bar and 0-12 bar scale.

Filter

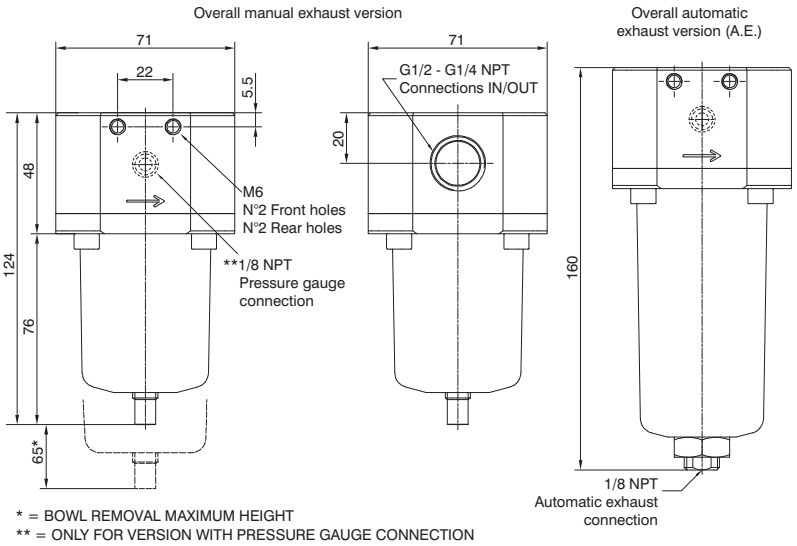

* = BOWL REMOVAL MAXIMUM HEIGHT
** = ONLY FOR VERSION WITH PRESSURE GAUGE CONNECTION

Ordering code

S V 173 C F S O Z

V	VERSION
	S = Standard surface finishing
	F = Clean profile
C	CONNECTIONS
	A = 1/4 NPT
	B = 1/2 NPT
	D = G1/2"
S	FILTER PORE SIZE
	A = 5 μm - inox 316
	B = 20 μm - inox 316
	C = 50 μm - inox 316
	D = 5 μm - HDPE
	E = 20 μm - HDPE
	F = 50 μm - HDPE
O	OPTIONS
	= Standard*
	L= Low temperature
	Z = Low temperature (-60 °C)
	H= High temperature
	S= Automatic exhaust
	EF= EPDM-FDA
Z	ENCLOSURE OPTIONS
	= Standard*
	G= pressure gauge connection

* no additional letter required

Operational characteristics

- Body, cup and internal components in AISI 316L stainless steel.
- A4 (AISI 316) Stainless steel fixing screws.
- Manual or automatic condensed exhaust.

Technical characteristics

Maximum inlet pressure (Standard version)	20 bar
Maximum inlet pressure (Automatic exhaust version)	16 bar
Temperature (Standard version)	-30 °C - +70 °C
Temperature (Low temperature version)	-50 °C - +70 °C
Temperature (Low temperature version -60 °C)	-60 °C - +70 °C
Temperature (High temperature version)	-5 °C - +150 °C
Temperature (Automatic exhaust version)	-5 °C - +50 °C
Temperature (EPDM-FDA version)	-40 °C - +100 °C
Weight	1650 (gr.)
Maximum condense capacity	25 cm^3
Assembly position	Vertical

Flow rate curves

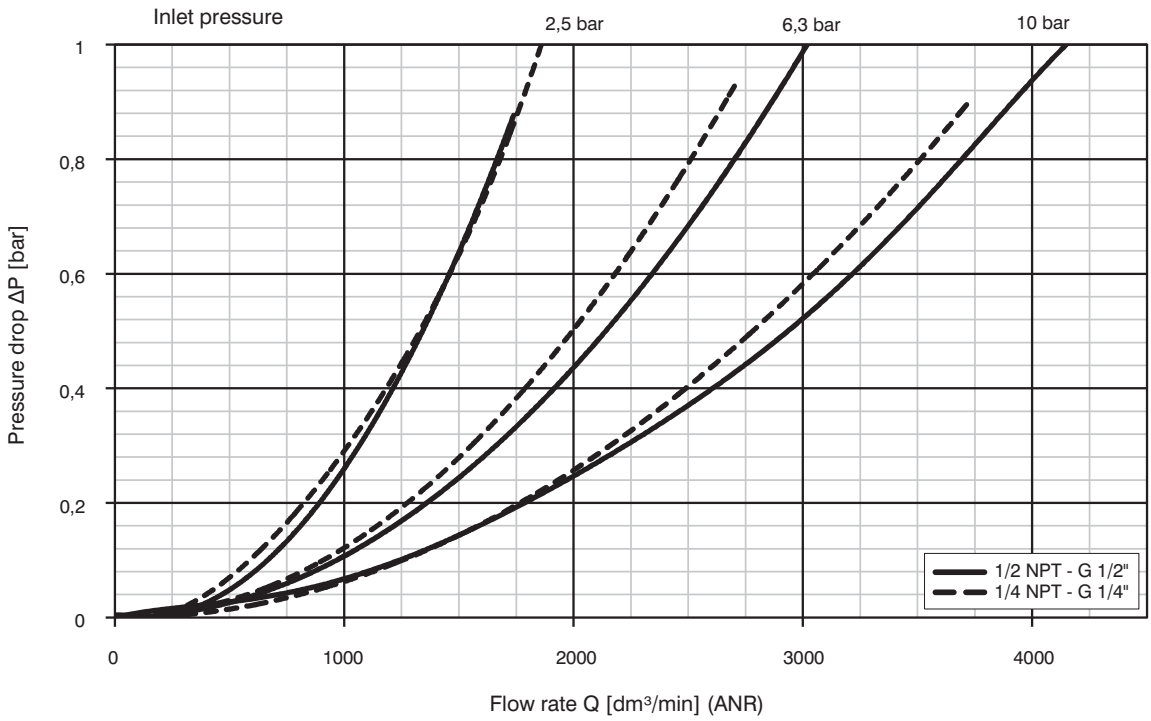

Regulator

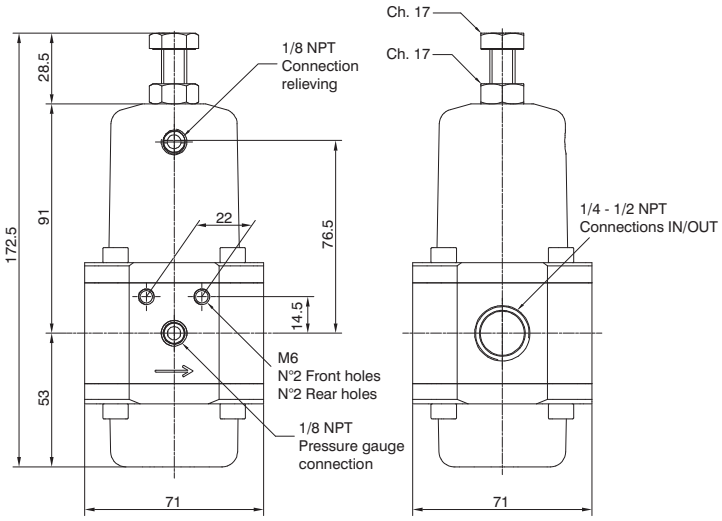

Ordering code

S Ⓥ 173 Ⓒ Ⓡ Ⓖ Ⓣ Ⓞ

Ⓥ	VERSION
	S = Standard surface finishing
	F = Clean profile
Ⓒ	CONNECTIONS
	A = 1/4 NPT
	B = 1/2 NPT
	D = G1/2"
Ⓖ	ADJUSTING RANGE
	A = 0-2 bar
	B = 0-4 bar
	C = 0-8 bar
	D = 0-12 bar
Ⓣ	TYPE
	= Standard*
	N= Without relieving
Ⓞ	OPTIONS
	= Standard*
	L= Low temperature
	Z = Low temperature (-60 °C)
	H= High temperature
	EF= EPDM-FDA

* no additional letter required

Operational characteristics

- Body, adjust. mechanism, AISI 316L stainless steel and caseback inter. components
- AISI 316 Adjustment springs.
- Fixing screws, adjustment screws and locknut in A4 (AISI 316) stainless steel.
- Pressure regulator diaphragm with over-pressure exhaust (Relieving).
- Low hysteresis rolling diaphragm.
- Balanced system.

Note

The pressure must be always regulating while increasing. For a more precise regulation and higher sensibility, the use of a regulator with a pressure range as close as possible to the regulated pressure is recommended.

Technical characteristics

Maximum inlet pressure (Standard version)	20 bar
Temperature (Standard version)	-30 C° - +70 C°
Temperature (Low temperature version)	-50 C° - +70 C°
Temperature (Low temperature version -60 °C)	-60 °C - +70 °C
Temperature (High temperature version)	-5 C° - +150 C°
Temperature (EPDM-FDA version)	-40 C° - +100 C°
Pressure gauge connections	1/8 NPT
Weight	1830 (gr.)
Assembly position	Indifferent

Flow rate curves

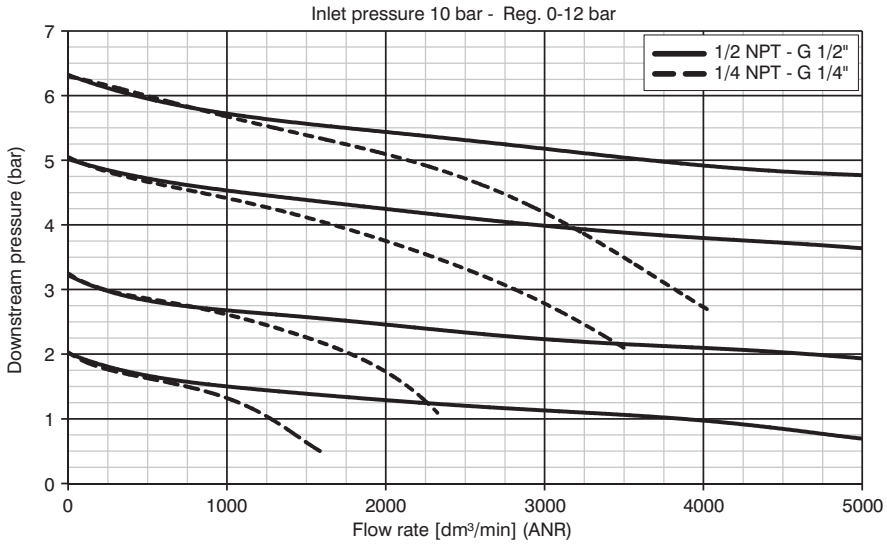

The Steel Line Series regulators are designed to withstand a maximum inlet pressure **at 60 bar**.
However the units is designed to regulater to a maximum of 20 bar.
Note the progress of the maximum regulated pressure as a function of the inlet pressure shown in the graph alongside.

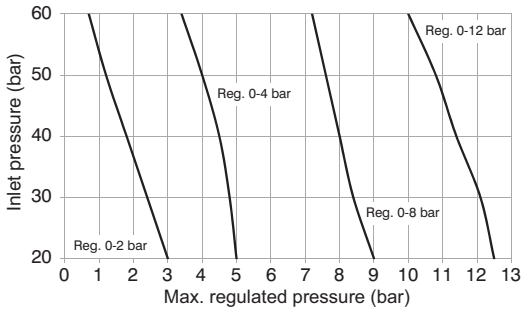

Filter - regulator

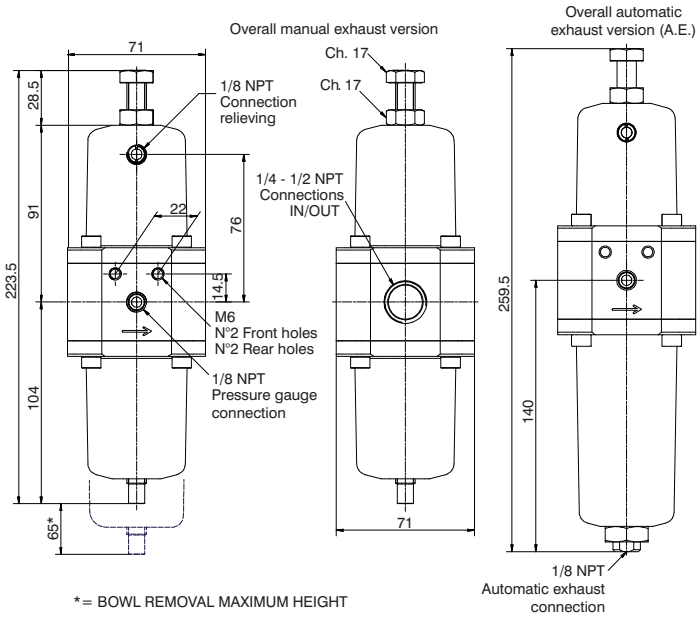

Ordering code

SⓋ173ⒸⒺⓈⒼⓉⓄ

Ⓥ	VERSION
	S = Standard surface finishing
	F = Clean profile
Ⓒ	CONNECTIONS
	A = 1/4 NPT
	B = 1/2 NPT
	D = G1/2"
Ⓢ	FILTER PORE SIZE
	A = 5 μm - 316 stainless steel
	B = 20 μm - 316 stainless steel
	C = 50 μm - 316 stainless steel
	D = 5 μm - HDPE
	E = 20 μm - HDPE
	F = 50 μm - HDPE
Ⓖ	ADJUSTING RANGE
	A = 0-2 bar
	B = 0-4 bar
	C = 0-8 bar
	D = 0-12 bar
Ⓣ	TYPE
	= Standard*
	N= Without relieving
Ⓞ	OPTIONS
	= Standard*
	L= Low temperature
	Z = Low temperature (-60 °C)
	H= High temperature
	S= Automatic exhaust
	EF= EPDM-FDA

* no additional letter required

Operational characteristics

- Body, adjust. mechanism, AISI 316L stainless steel and caseback intern. components
- AISI 316 Adjustment springs.
- Fixing screws, adjustment screws and locknut in A4 (AISI 316) stainless steel.
- Filter-pressure regulator diaphragm with over-pressure exhaust (Relieving).
- Low hysteresis rolling diaphragm.
- Balanced system.
- Manual or automatic condensed exhaust.

Note

The pressure must be always regulating while increasing. For a more precise regulation and higher sensibility, the use of a regulator with a pressure range as close as possible to the regulated pressure is recommended.

Technical characteristics

Maximum inlet pressure (Standard version)	20 bar
Maximum inlet pressure (Automatic exhaust version)	16 bar
Temperature (Standard version)	-30 °C - +70 °C
Temperature (Low temperature version)	-50 °C - +70 °C
Temperature (Low temperature version -60 °C)	-60 °C - +70 °C
Temperature (High temperature version)	-5 °C - +150 °C
Temperature (Automatic exhaust version)	-5 °C - +50 °C
Temperature (EPDM-FDA version)	-40 °C - +100 °C
Pressure gauge connections	1/8 NPT
Weight	2110 (gr.)
Max. bowl capacity	25 cm^3
Assembly position	Vertical

Flow rate curves

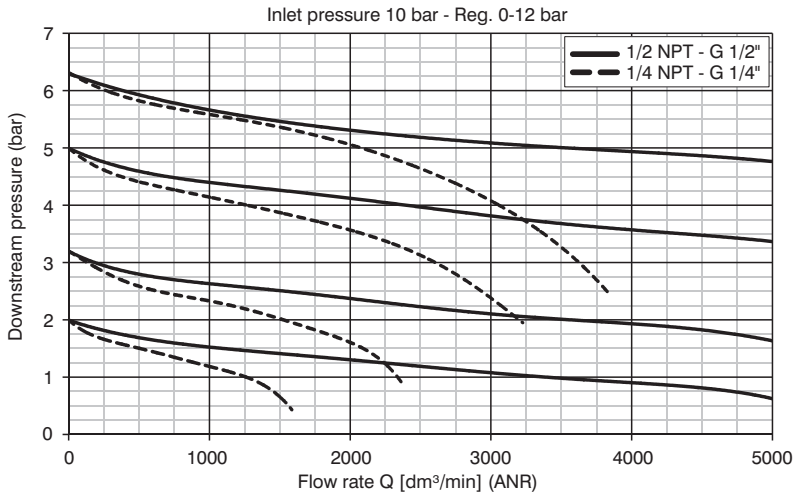

The Steel Line Series regulators are designed to withstand a maximum inlet pressure **at 60 bar**.
However the units is designed to regulater to a maximum of 20 bar.
Note the progress of the maximum regulated pressure as a function of the inlet pressure shown in the graph alongside.

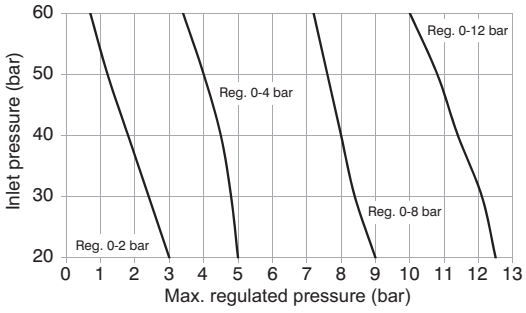

Fixing bracket

Ordering code
SS17350

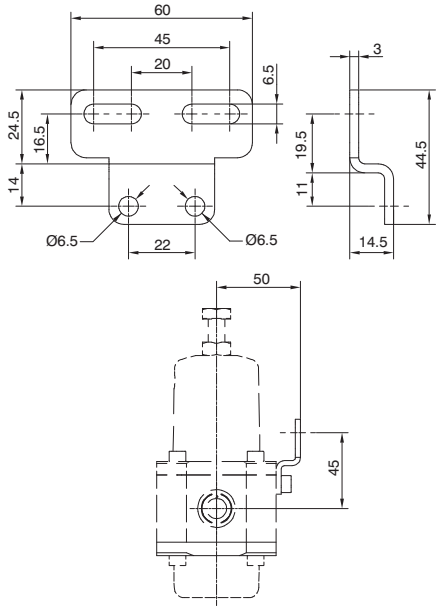

Weight 32 gr.
AISI 316L stainless steel material.
Allows wall fixing of individual products.

Pressure gauge

Ordering code	
SS17070AⓈ	
Ⓢ	SCALE
	A = 0 - 4 bar
	B = 0 - 12 bar

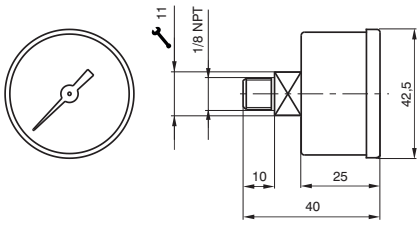

Weight 60 gr.
AISI 316 stainless steel material.
Glass transparent part with an AISI 316 stainless steel retaining ring.
Available with 0-4 bar and 0-12 bar scale.

Filter

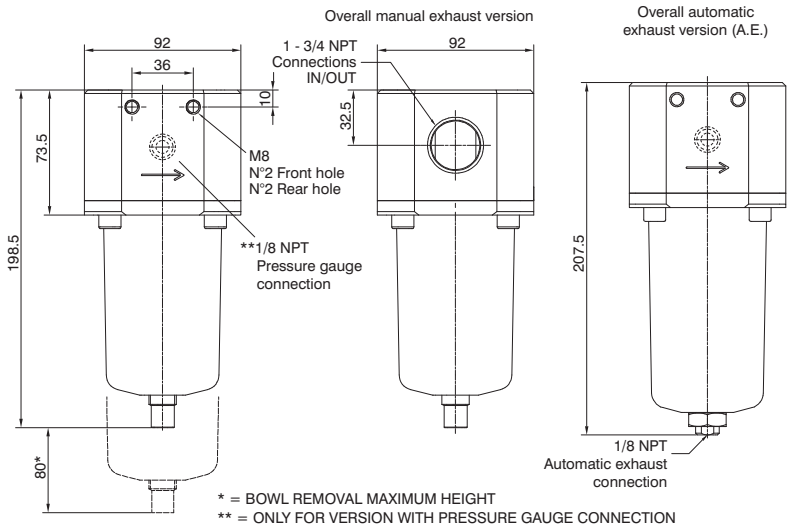

Ordering code

S V 174 C F S O Z

V	VERSION
	S = Standard surface finishing
	F = Clean profile
C	CONNECTIONS
	A = 3/4 NPT
	B = 1 NPT
	D = G1"
S	FILTER PORE SIZE
	A = 5 μm - 316 stainless steel
	B = 20 μm - 316 stainless steel
	C = 50 μm - 316 stainless steel
	D = 5 μm - HDPE
	E = 20 μm - HDPE
	F = 50 μm - HDPE
O	OPTIONS
	= Standard*
	L= Low temperature
	Z = Low temperature (-60 °C)
	H= High temperature
	S= Automatic exhaust
	EF= EPDM-FDA
Z	ENCLOSURE OPTIONS
	= Standard*
	G= pressure gauge connection

* no additional letter required

Operational characteristics

- Body, cup and internal components in AISI 316L stainless steel.
- A4 (AISI 316) Stainless steel fixing screws.
- Manual or automatic condensed exhaust.

Technical characteristics

Maximum inlet pressure (Standard version)	20 bar
Maximum inlet pressure (Automatic exhaust version)	16 bar
Temperature (Standard version)	-30 °C - +70 °C
Temperature (Low temperature version)	-50 °C - +70 °C
Temperature (Low temperature version -60 °C)	-60 °C - +70 °C
Temperature (High temperature version)	-5 °C - +150 °C
Temperature (Automatic exhaust version)	-5 °C - +50 °C
Temperature (EPDM-FDA version)	-40 °C - +100 °C
Weight 3/4 NPT - G 3/4"	4700 (gr.)
Weight 1 NPT - G 1"	4600 (gr.)
Maximum condense capacity	78 cm^3
Assembly position	Vertical

Flow rate curves

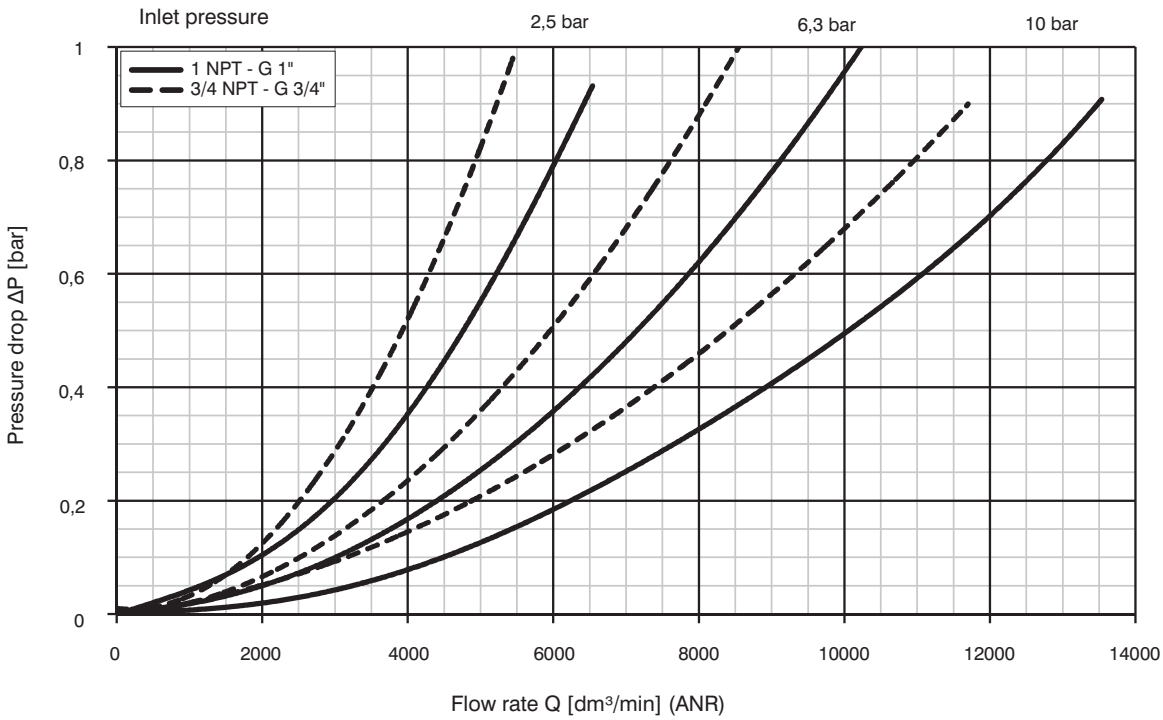

Regulator

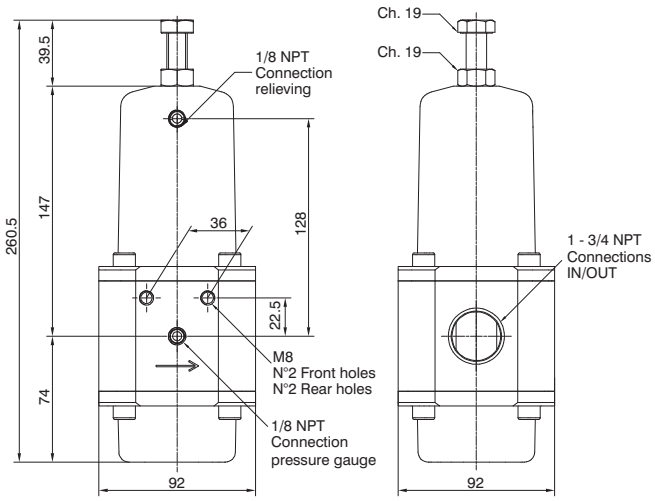

Ordering code

S V 174 C R G T O

V	VERSION
	S = Standard surface finishing
	F = Clean profile
C	CONNECTIONS
	A = 3/4 NPT
	B = 1 NPT
	D = G1"
G	ADJUSTING RANGE
	A = 0-2 bar
	B = 0-4 bar
	C = 0-7 bar
	D = 0-10 bar
T	TYPE
	= Standard*
	N= Without relieving
O	OPTIONS
	= Standard*
	L= Low temperature
	Z = Low temperature (-60 °C)
	H= High temperature
	EF= EPDM-FDA

* no additional letter required

Operational characteristics

- Body, adjust. mechanism, AISI 316L stainless steel and caseback inter. components
- AISI 316 Adjustment springs.
- Fixing screws, adjustment screws and locknut in A4 (AISI 316) stainless steel.
- Pressure regulator diaphragm with over-pressure exhaust (Relieving).
- Low hysteresis rolling diaphragm.
- Balanced system.

Note

The pressure must be always regulating while increasing. For a more precise regulation and higher sensibility, the use of a regulator with a pressure range as close as possible to the regulated pressure is recommended.

Technical characteristics

Maximum inlet pressure (Standard version)	20 bar
Temperature (Standard version)	-30 °C - +70 °C
Temperature (Low temperature version)	-50 °C - +70 °C
Temperature (Low temperature version -60 °C)	-60 °C - +70 °C
Temperature (High temperature version)	-5 °C - +150 °C
Temperature (EPDM-FDA version)	-40 °C - +100 °C
Pressure gauge connections	1/8 NPT
Weight 3/4 NPT - G 3/4"	5500 (gr.)
Weight 1 NPT - G 1"	5400 (gr.)
Assembly position	Indifferent

Flow rate curves

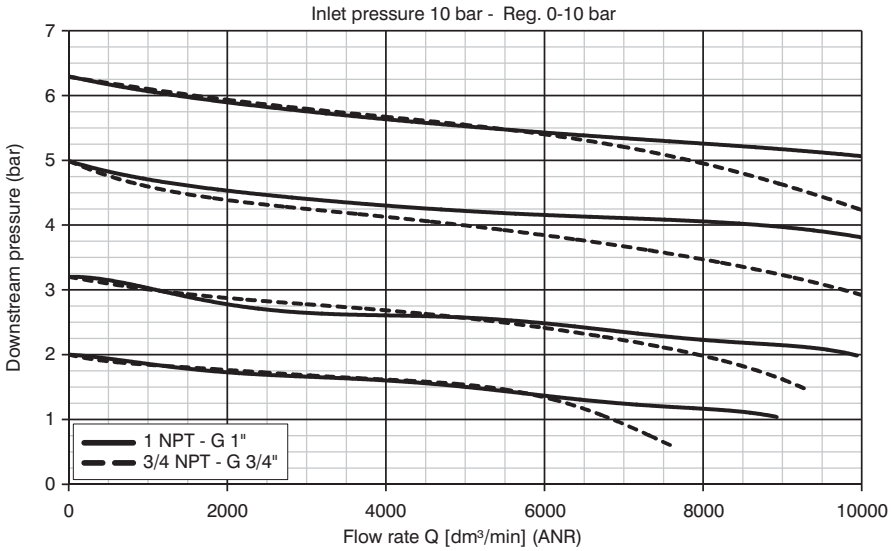

The Steel Line Series regulators are designed to withstand a maximum inlet pressure **at 60 bar**.
However the units is designed to regulater to a maximum of 20 bar.
Note the progress of the maximum regulated pressure as a function of the inlet pressure shown in the graph alongside.

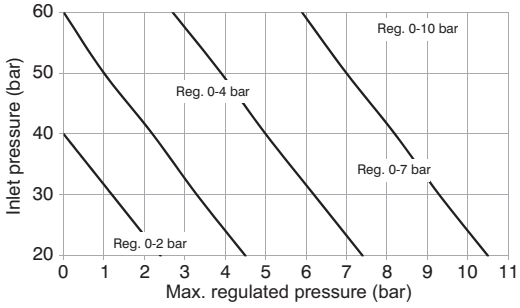

Filter - regulator

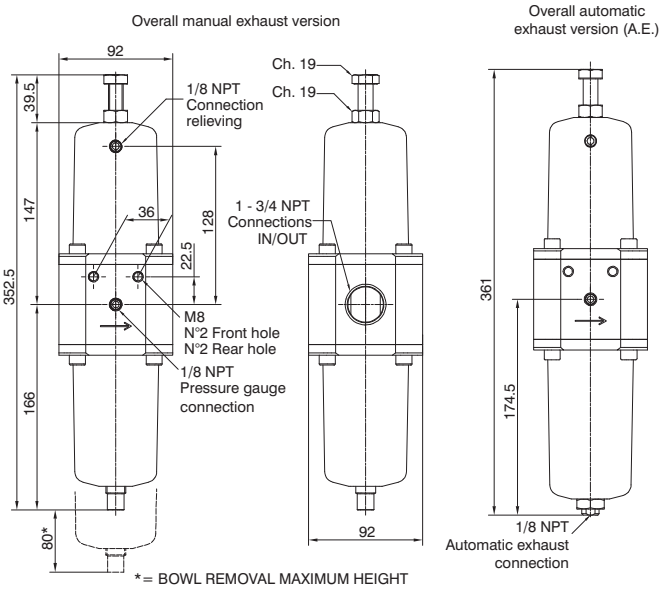

Ordering code

SⓋ174ⒸEⓈⒼⓉⓄ

Ⓥ	VERSION
	S = Standard surface finishing
	F = Clean profile
Ⓒ	CONNECTIONS
	A = 3/4 NPT
	B = 1 NPT
	D = G1"
Ⓢ	FILTER PORE SIZE
	A = 5 μm - 316 stainless steel
	B = 20 μm - 316 stainless steel
	C = 50 μm - 316 stainless steel
	D = 5 μm - HDPE
	E = 20 μm - HDPE
	F = 50 μm - HDPE
Ⓖ	ADJUSTING RANGE
	A = 0-2 bar
	B = 0-4 bar
	C = 0-7 bar
	D = 0-10 bar
Ⓣ	TYPE
	= Standard*
	N= Without relieving
Ⓞ	OPTIONS
	= Standard*
	L= Low temperature
	Z = Low temperature (-60 °C)
	H= High temperature
	S= Automatic exhaust
	EF= EPDM-FDA

* no additional letter required

Operational characteristics

- Body, adjust. mechanism, AISI 316L stainless steel and caseback inter. components
- AISI 316 Adjustment springs.
- Fixing screws, adjustment screws and locknut in A4 (AISI 316) stainless steel.
- Filter-pressure regulator diaphragm with over-pressure exhaust (Relieving).
- Low hysteresis rolling diaphragm.
- Balanced system.
- Available in 4 pressure ranges up to 10 bar.
- Manual or automatic condensed exhaust.

Note

The pressure must be always regulating while increasing. For a more precise regulation and higher sensibility, the use of a regulator with a pressure range as close as possible to the regulated pressure is recommended.

Technical characteristics

Maximum inlet pressure (Standard version)	20 bar
Maximum inlet pressure (Automatic exhaust version)	16 bar
Temperature (Standard version)	-30 °C - +70 °C
Temperature (Low temperature version)	-50 °C - +70 °C
Temperature (Low temperature version -60 °C)	-60 °C - +70 °C
Temperature (High temperature version)	-5 °C - +150 °C
Temperature (Automatic exhaust version)	-5 °C - +50 °C
Temperature (EPDM-FDA version)	-40 °C - +100 °C
Pressure gauge connections	1/8 NPT
Weight 3/4 NPT - G 3/4"	6300 (gr.)
Weight 1 NPT - G 1"	6200 (gr.)
Max. bowl capacity	78 cm^3
Assembly position	Vertical

Flow rate curves

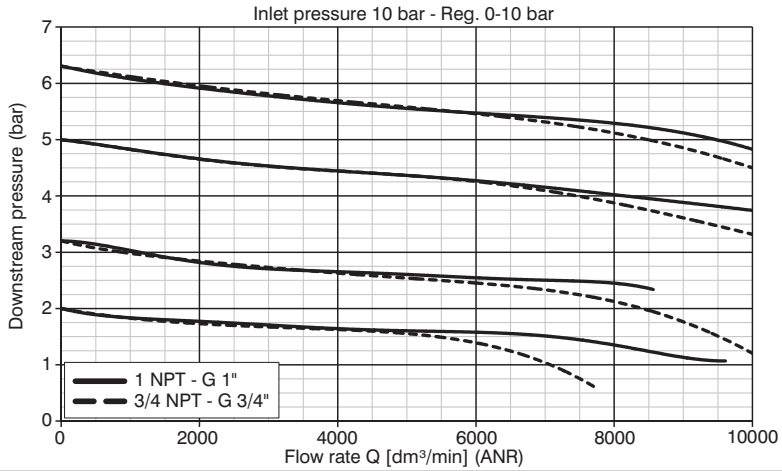

The Steel Line Series regulators are designed to withstand a maximum inlet pressure **at 60 bar**.
However the units is designed to regulater to a maximum of 20 bar.
Note the progress of the maximum regulated pressure as a function of the inlet pressure shown in the graph alongside.

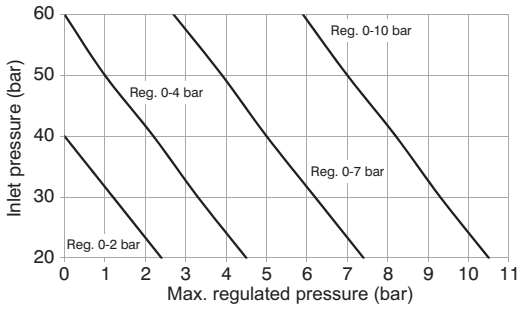

Fixing bracket

Ordering code
SS17450

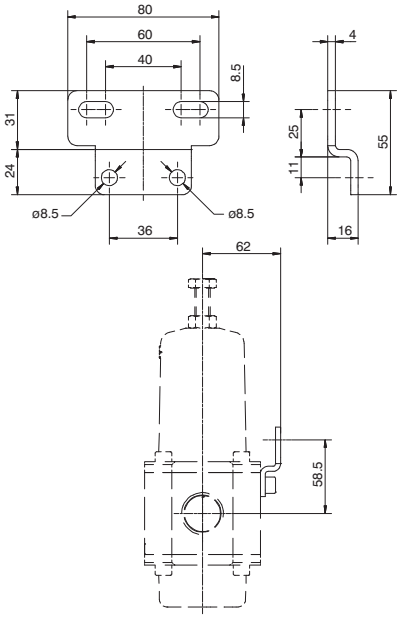

Weight 32 gr.
AISI 316L stainless steel material.
Allows wall fixing of individual products.

Pressure gauge

Ordering code
SS17070AⓈ

Ⓢ	SCALE
	A = 0 - 4 bar
	B = 0 - 12 bar

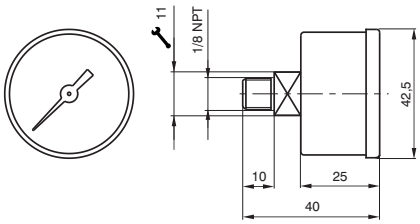

Weight 60 gr.
AISI 316 stainless steel material.
Glass transparent part with an AISI 316 stainless steel retaining ring.
Available with 0-4 bar and 0-12 bar scale.

General

Modern industrial applications require increasingly high performances from their pneumatic components. For example, the speed and thrust of a pneumatic cylinder, or the torque of a rotary actuator may need to be varied. These parameters often need to be modified dynamically while an operation is running.
Traditional solutions based upon pneumatic valves supplied with different pressures often take up excessive amounts of space. An alternative solution is a regulator that can vary pressure over time. This type of regulator is known as an electronically controlled proportional regulator.
Three sizes have been designed, with flow rates of 7, 1,100 and 4,000 Nl/min.

Application fields.

Typical applications will include the necessity to dynamically control the force of an actuator, be it thrust or torque.
Examples include: Closing systems, painting systems, tensioning systems, packaging systems, pneumatic braking systems, force control for welding grippers, thickness compensation systems, balancing systems, laser cutting, pressure transducers for the control of modulating valves, test benches for system testing, force control for buffers on polishers, etc.

Product presentation

The supply and exhaust connections are on one side of the regulator and the working port is on the opposite side. The two remaining sides carry G1/8" ports that are blanked off with removable plugs, these can be used to connect a pressure gauge or as an outlet port. If you order the version with the external feedback there is a M5 threaded connection to which connect the feedback pressure (to the pressure transducer). This connection is placed on the outlet connection side. This option allows to take the signal from a remote point instead of directly from the outlet connection; this function is typically used when the regulated pressure is used far away to the regulator. The control solenoid valves, the pressure sensor, and the management electronics are placed in upper part of the regulator.
The electronic management system is the same for all the size 0, size 1 and size 3 regulators.
The new proportional regulator range has all the features that were only optional on the previous model. When placing your order it is only necessary to specify the type of control signal, Voltage (T) or current (C), and the pressure range required.

Functional diagram

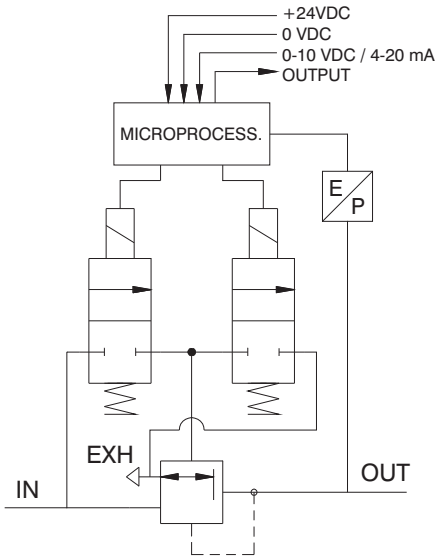

CLOSED LOOP diagram (internal control circuit)

The proportional regulator is known as a CLOSED LOOP regulator because a pressure transducer in the circuit transmits a continuous analog signal to the microprocessor, which compares the reference value with the detected value and supplies the control solenoid valves accordingly.

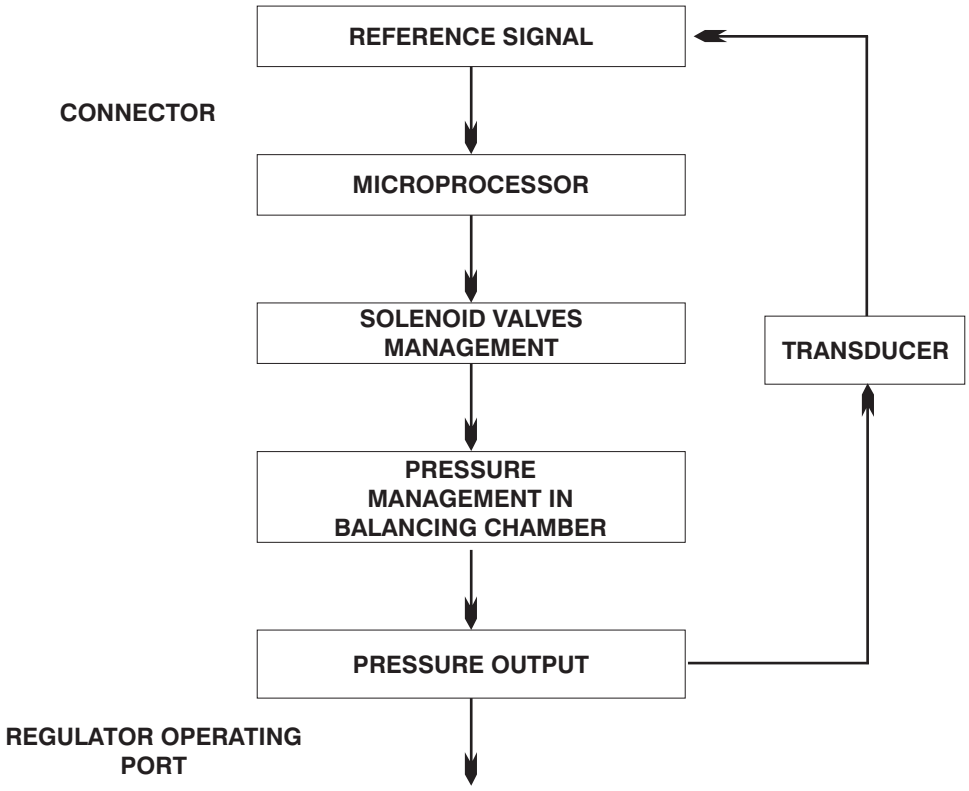

Features

Pneumatic	Fluid		Air filtered at 5 micron and dehumidified		
	Minimum inlet pressure		Desired outlet pressure + 1 bar		
	Maximum inlet pressure		10 bar		
	Outlet pressure	Ordering code	0009	0005	0001
		Pressure value	0 - 9 bar	0 - 5 bar	0 - 1 bar
	Nominal flowrate from 1 to 2 (6 bar Δp 1 bar)	**Size 0**	**Size 1**	**Size 3**	
		7 Nl /min	1.100 Nl /min	4.000 Nl/min	
	Discharge flowrate (at 6 bar with 1 bar overpressure)	7 Nl /min	1.300 Nl /min	4.500 Nl/min	
	Air consumption	< 1 Nl/min	< 1 Nl/min	< 1 Nl/min	
	Supply connection	M5	G 1/4"	G 1/2"	
	Operating connection	M5	G 1/4"	G 1/2"	
	Exhaust connection	Ø1,8	G 1/8"	G 3/8"	
	Maximum fitting tightening	3 Nm	15 Nm	15 Nm	

Electric	Supply voltage		24VDC ± 10% (stabilised with ripple <1%)
	Standby current consumption		55 mA
	Current consumption with solenoid valves on		145 mA
	Reference signal	Voltage	*0 - 10 V *0 - 5 V *1 - 5 V
		Current	*4 - 20 mA *0 - 20 mA
	Input impedance	Voltage	10 KΩ
		Current	250 Ω
	Voltage analog output		*0 - 10 V *0 - 5 V
	Current analog output		*4 - 20 mA *0 - 20 mA
	Digital inputs		24VDC ± 10%
	Digital outputs		24 VDC PNP (max current 50 mA)
	Connector		D-sub 15 poles

Functional	Linearity	< ± 0,3 % F.S.
	Hysteresis	<0,3 % F.S.
	Repeatability	< ± 0,3 % F.S.
	Sensitivity	< ± 0,3 % F.S.
	Assembly position	Indifferent
	Protection grade	IP65 (with casing fitted)
	Ambient temperature	-5° - 50°C / 23° - 122°F

Constructional	Body	Anodised aluminium		
	Shutters	Brass with vulcanised NBR		
	Diaphragm	Cloth-covered rubber		
	Seals	NBR		
	Cover for electrical part	Technopolymer		
	Springs	AISI 302		
	Weight	**Size 0**	**Size 1**	**Size 3**
		168 gr.	360 gr.	850 gr.

*** Selectable by keyboard or by RS-232**

Overall dimensions (Standard version and CANopen version with SUB-D 15 poles)

SIZE 0

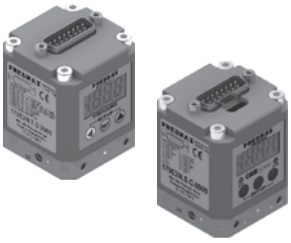

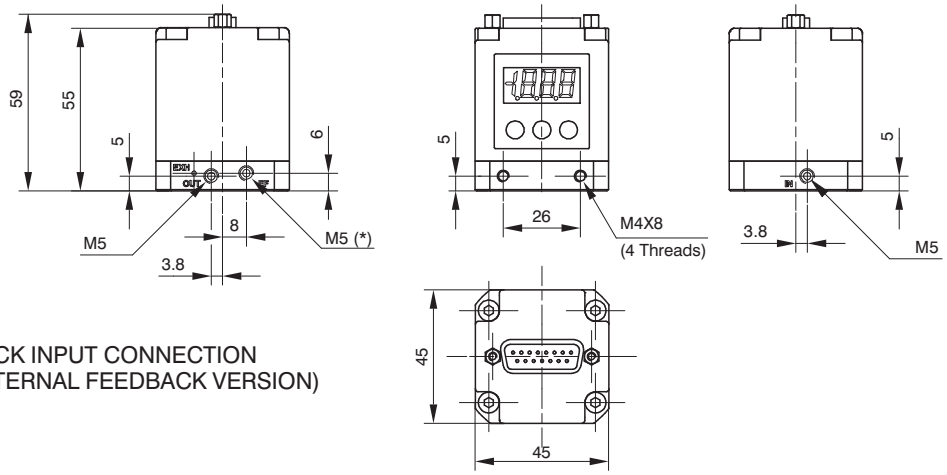

* = EXTERNAL FEEDBACK INPUT CONNECTION
(AVAILABLE ONLY ON THE EXTERNAL FEEDBACK VERSION)

SIZE 1

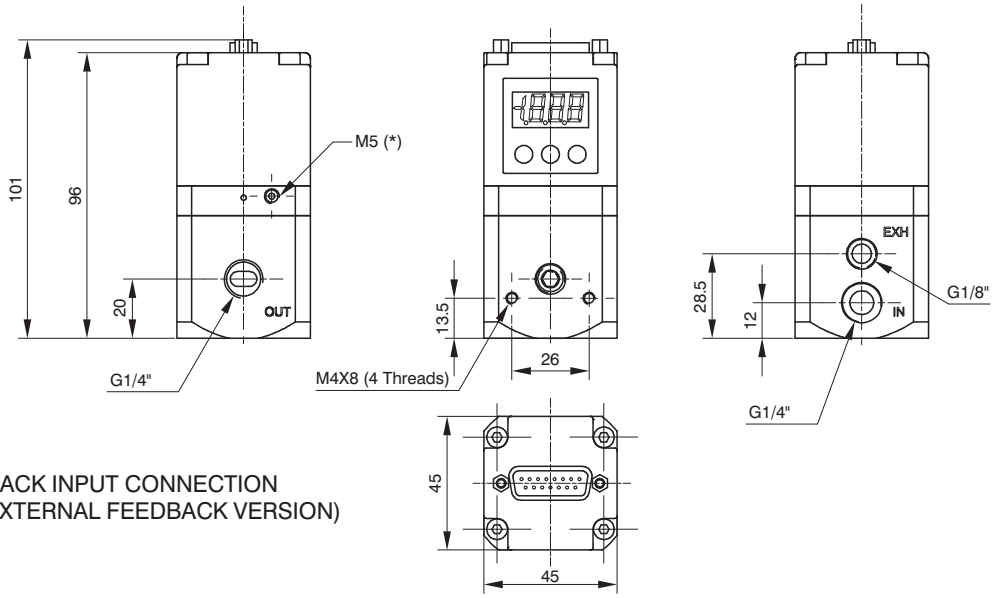

* = EXTERNAL FEEDBACK INPUT CONNECTION
(AVAILABLE ONLY ON THE EXTERNAL FEEDBACK VERSION)

SIZE 3

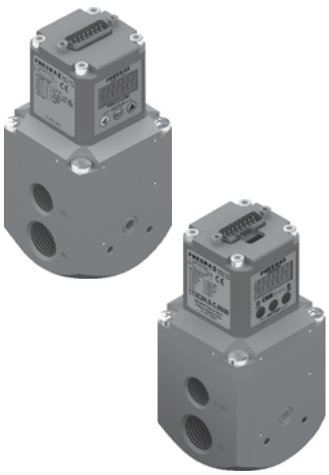

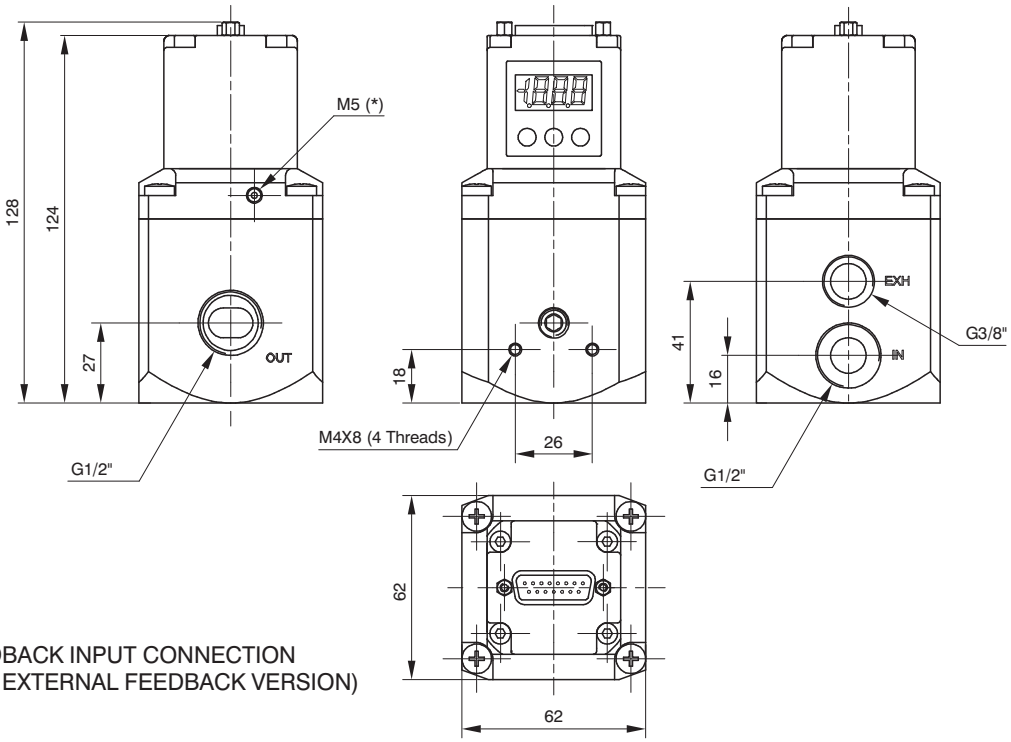

* = EXTERNAL FEEDBACK INPUT CONNECTION
(AVAILABLE ONLY ON THE EXTERNAL FEEDBACK VERSION)

Mounting options (Standard version and CANopen version with SUB-D 15 poles)

In addition to mounting directly using the M4 tappings on the body, the 170M5 bracket may also be used, as shown below:

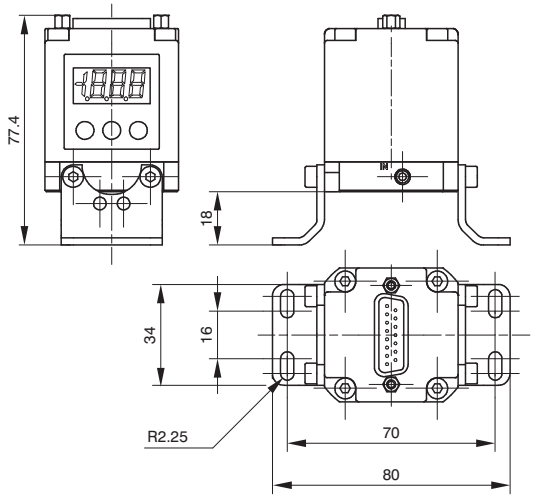

SIZE 0

SIZE 1

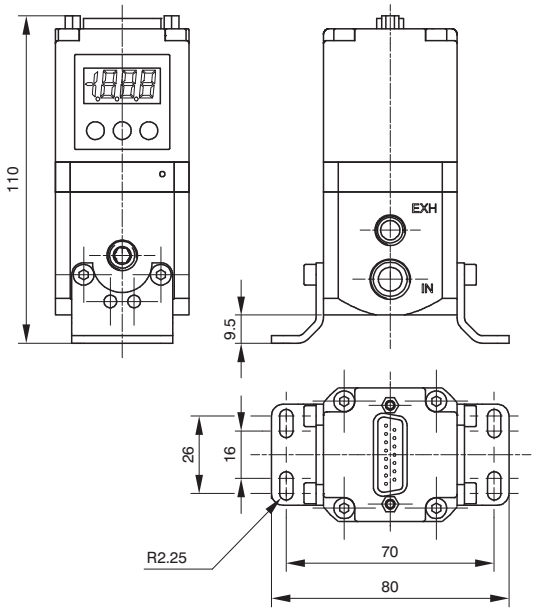

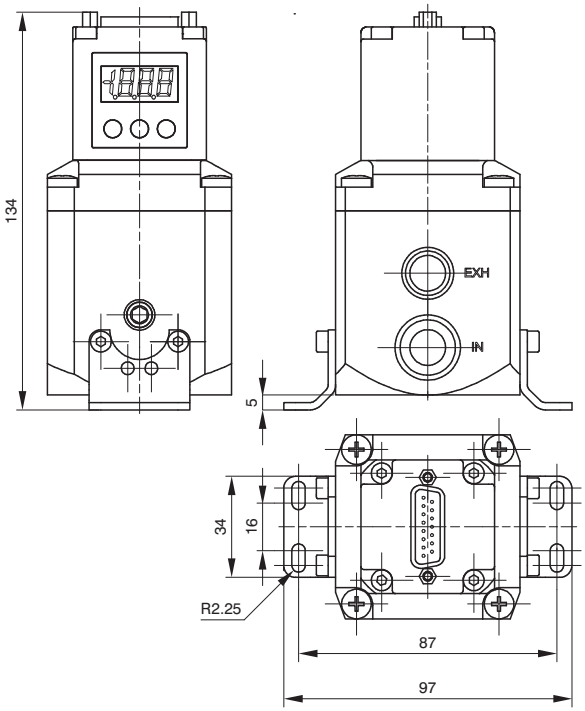

SIZE 3

Overall dimensions (CANopen version with M12 connector)

SIZE 0

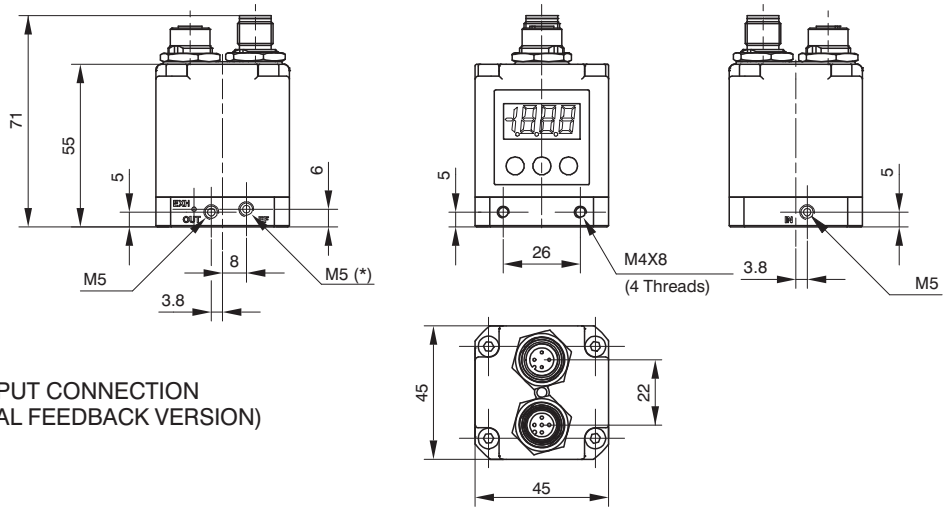

* = EXTERNAL FEEDBACK INPUT CONNECTION
(AVAILABLE ONLY ON THE EXTERNAL FEEDBACK VERSION)

SIZE 1

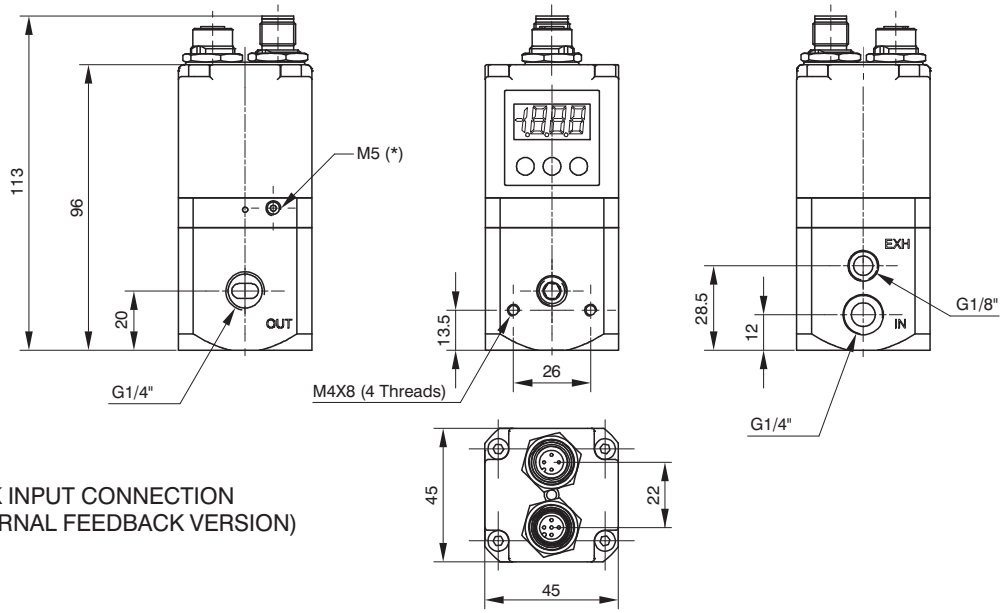

* = EXTERNAL FEEDBACK INPUT CONNECTION
(AVAILABLE ONLY ON THE EXTERNAL FEEDBACK VERSION)

SIZE 3

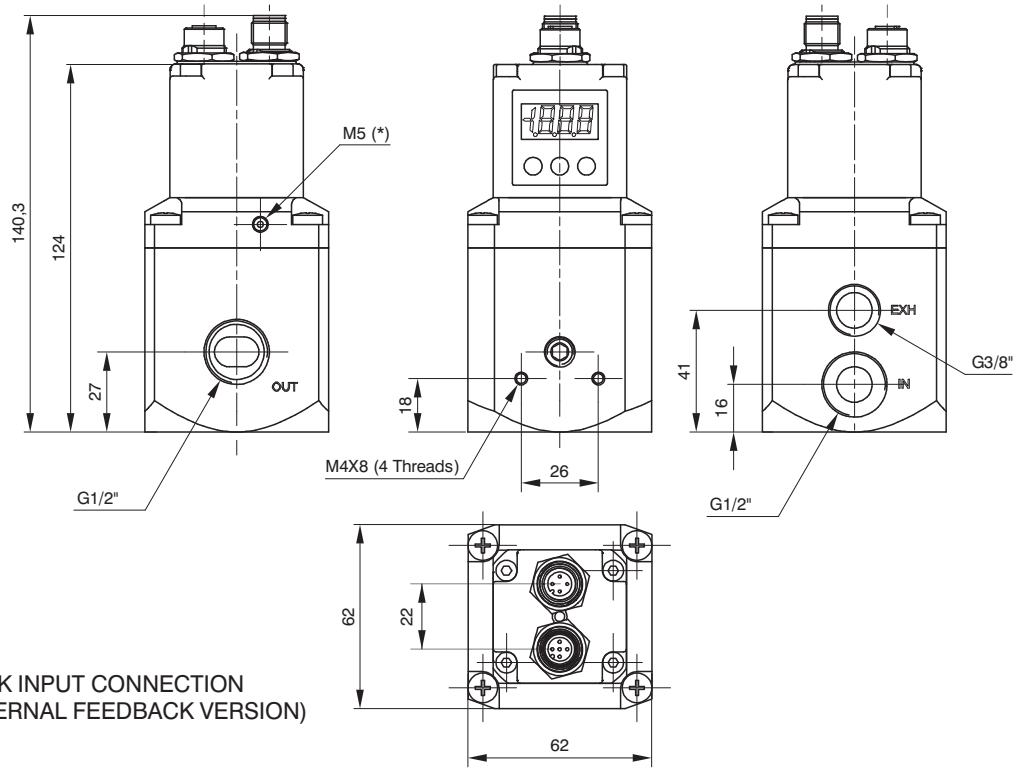

* = EXTERNAL FEEDBACK INPUT CONNECTION
(AVAILABLE ONLY ON THE EXTERNAL FEEDBACK VERSION)

Mounting options (CANopen version with M12 connector)

In addition to mounting directly using the M4 tappings on the body, the 170M5 bracket may also be used, as shown below:

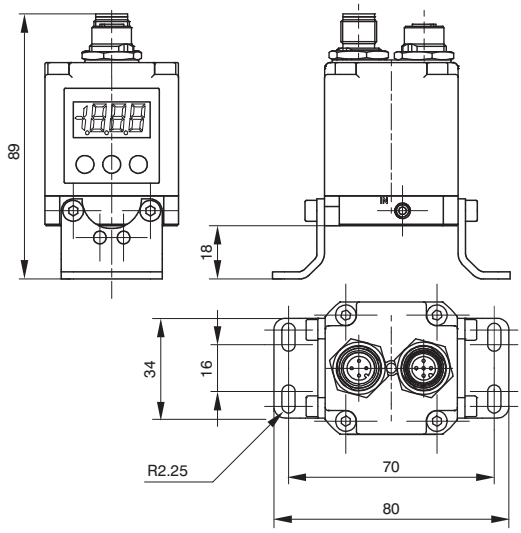

SIZE 0

SIZE 1

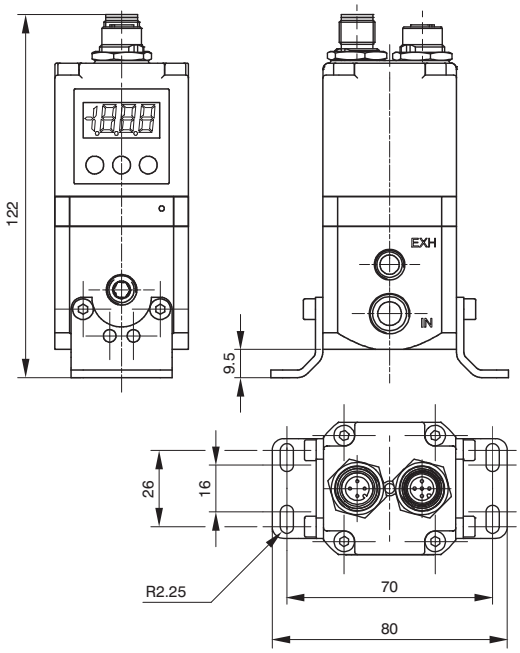

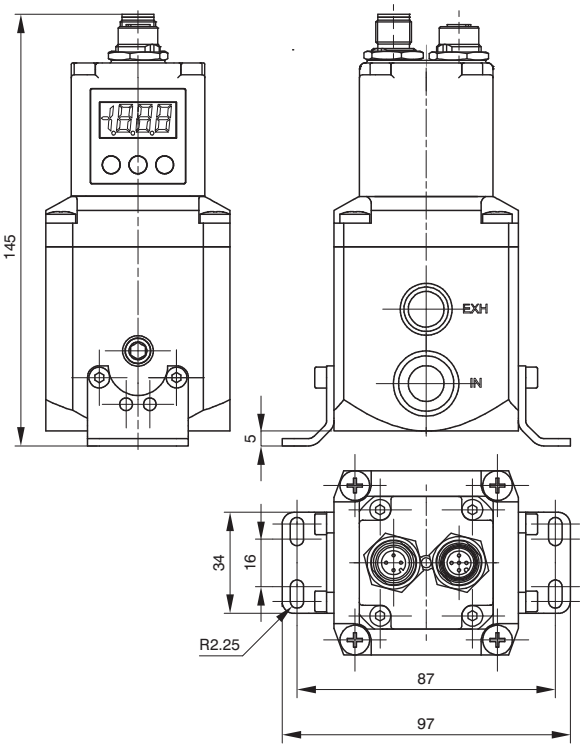

SIZE 3

Overall dimensions (ECONOMIC version)

SIZE 0

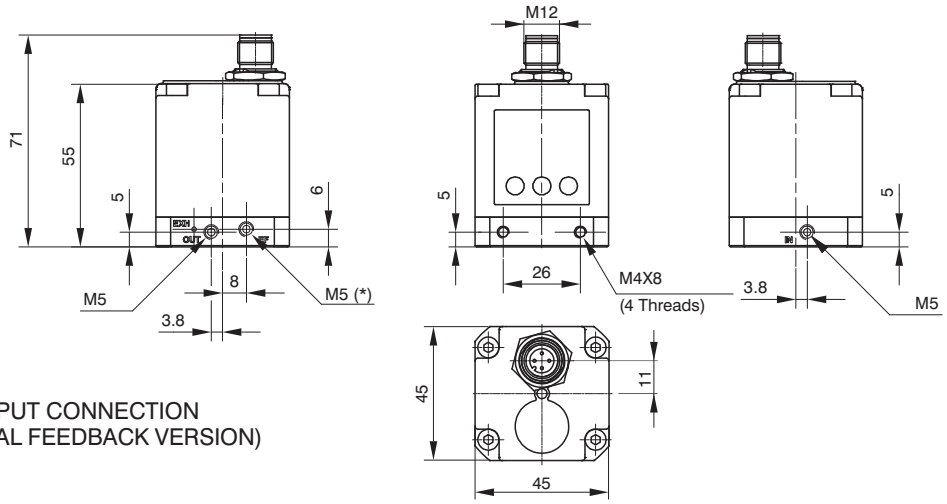

* = EXTERNAL FEEDBACK INPUT CONNECTION
(AVAILABLE ONLY ON THE EXTERNAL FEEDBACK VERSION)

SIZE 1

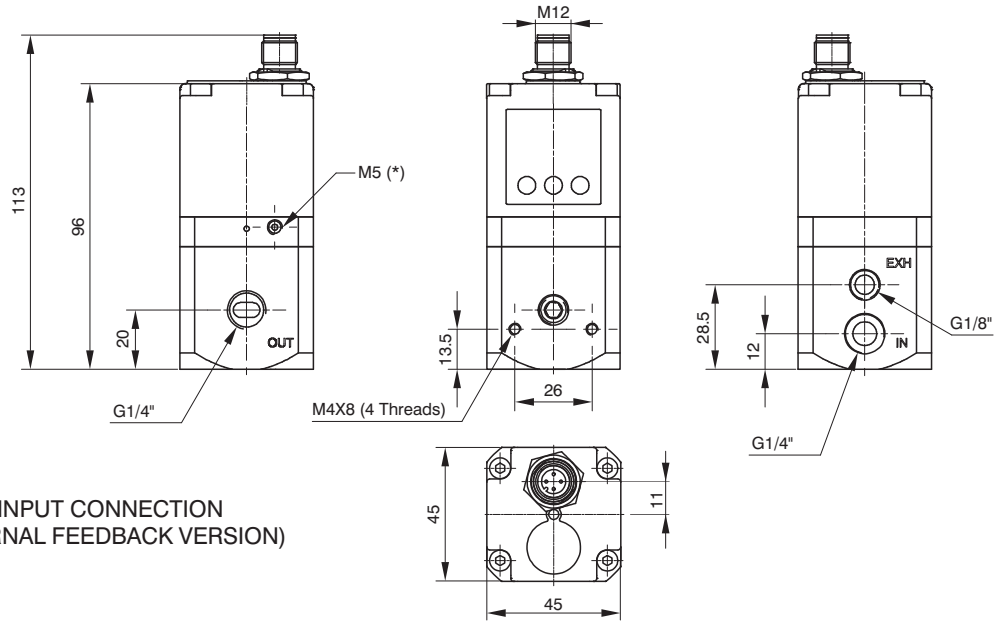

* = EXTERNAL FEEDBACK INPUT CONNECTION
(AVAILABLE ONLY ON THE EXTERNAL FEEDBACK VERSION)

SIZE 3

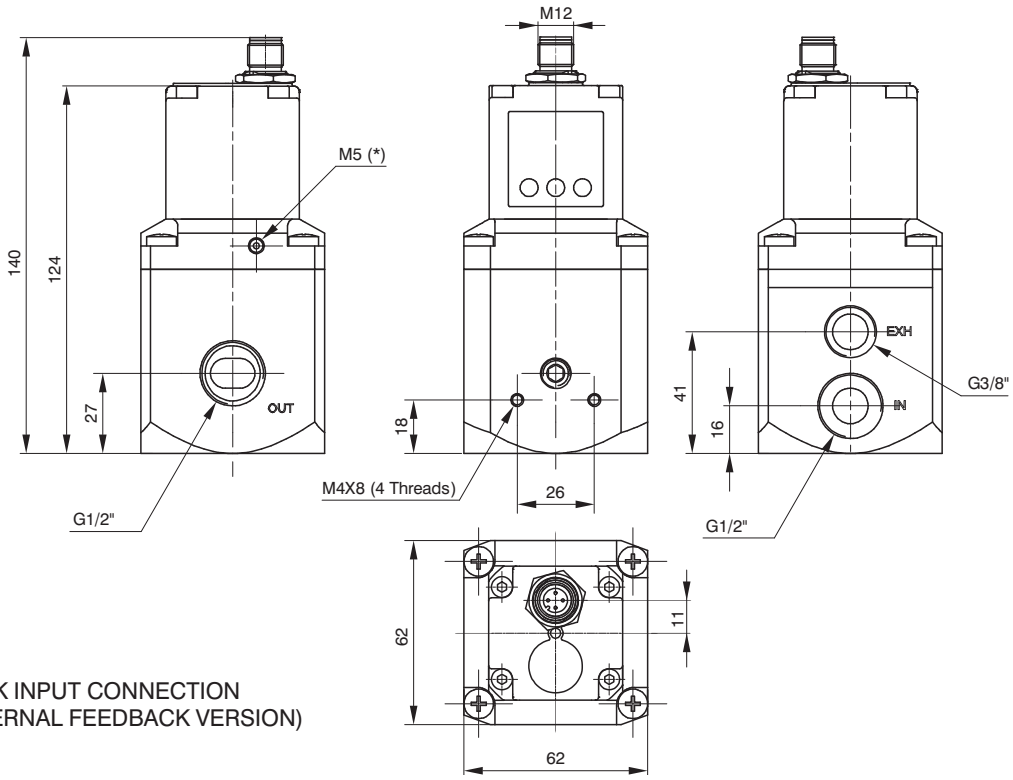

* = EXTERNAL FEEDBACK INPUT CONNECTION
(AVAILABLE ONLY ON THE EXTERNAL FEEDBACK VERSION)

Mounting options (ECONOMIC version)

In addition to mounting directly using the M4 tappings on the body, the 170M5 bracket may also be used, as shown below:

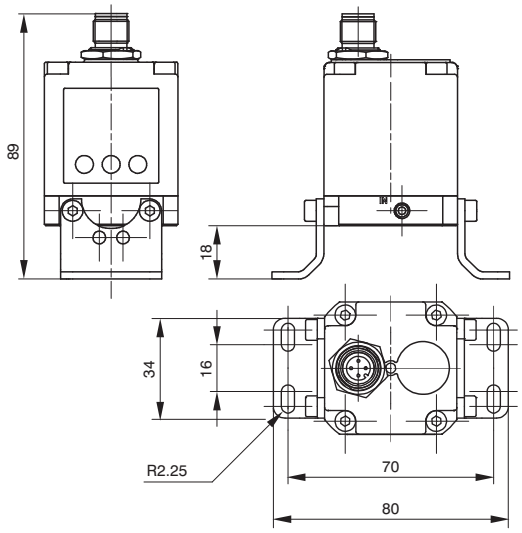

SIZE 0

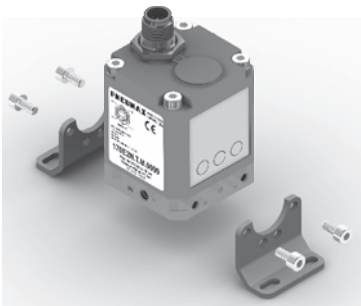

SIZE 1

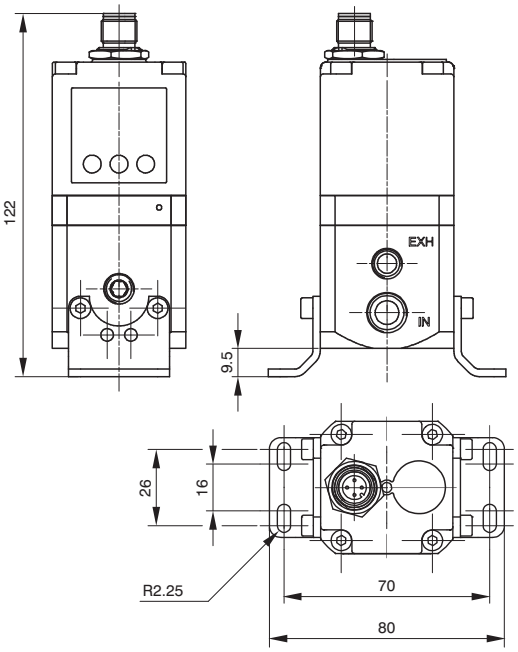

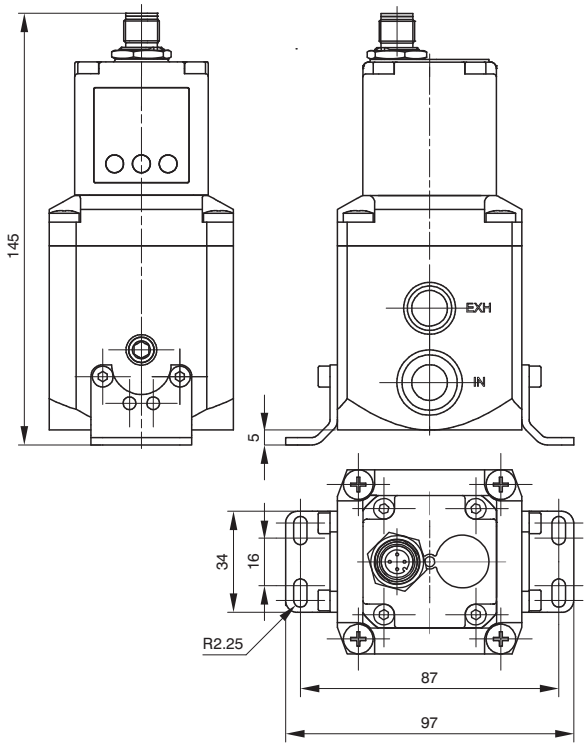

SIZE 3

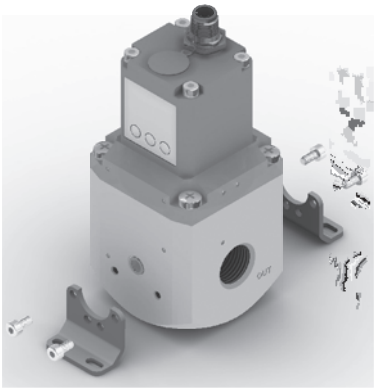

Overall dimensions (M12 Standard version)

SIZE 0

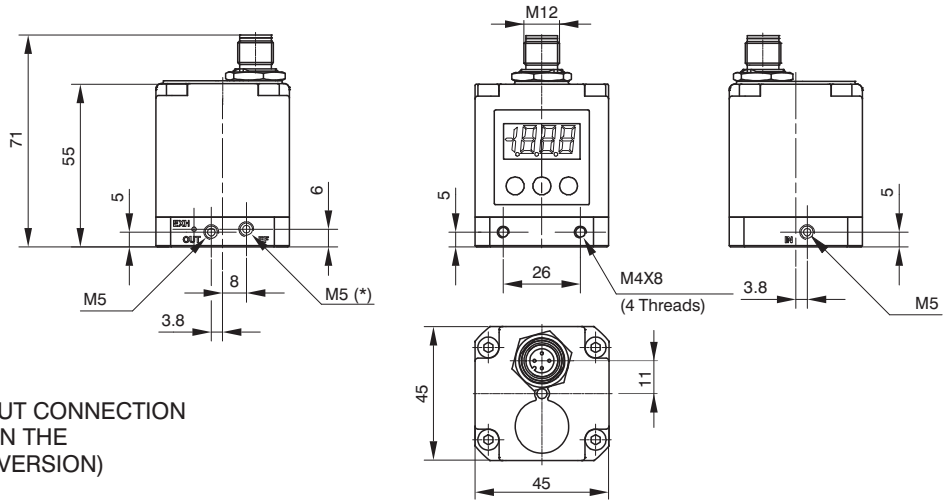

* = EXTERNAL FEEDBACK INPUT CONNECTION
(AVAILABLE ONLY ON THE
EXTERNAL FEEDBACK VERSION)

SIZE 1

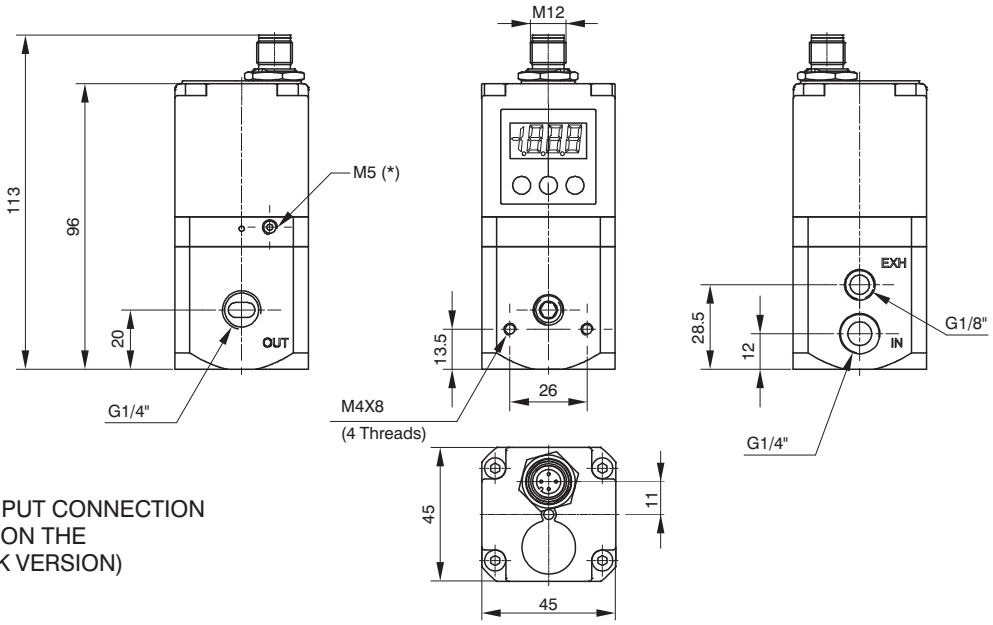

* = EXTERNAL FEEDBACK INPUT CONNECTION
(AVAILABLE ONLY ON THE
EXTERNAL FEEDBACK VERSION)

SIZE 3

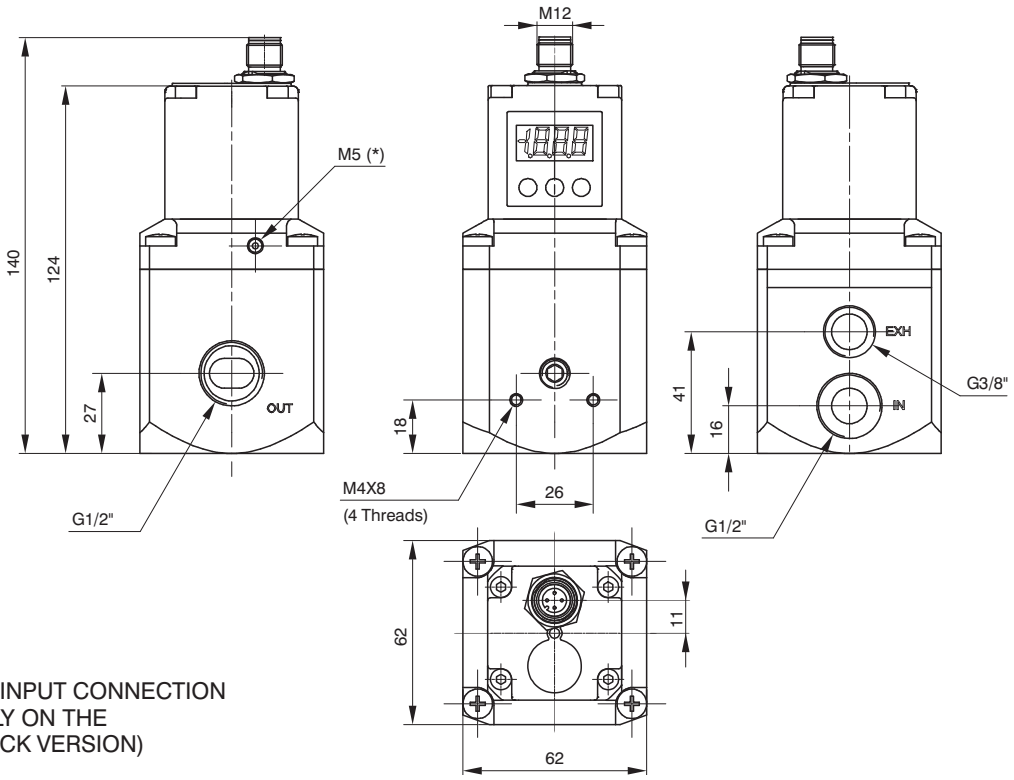

* = EXTERNAL FEEDBACK INPUT CONNECTION
(AVAILABLE ONLY ON THE
EXTERNAL FEEDBACK VERSION)

Mounting options (M12 Standard version)

In addition to mounting directly using the M4 tappings on the body, the 170M5 bracket may also be used, as shown below:

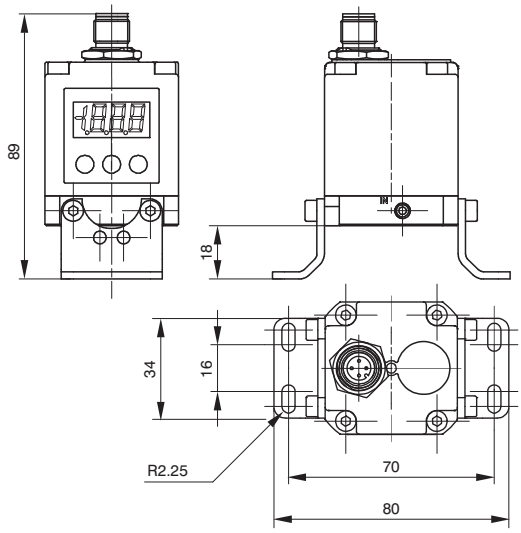

SIZE 0

SIZE 1

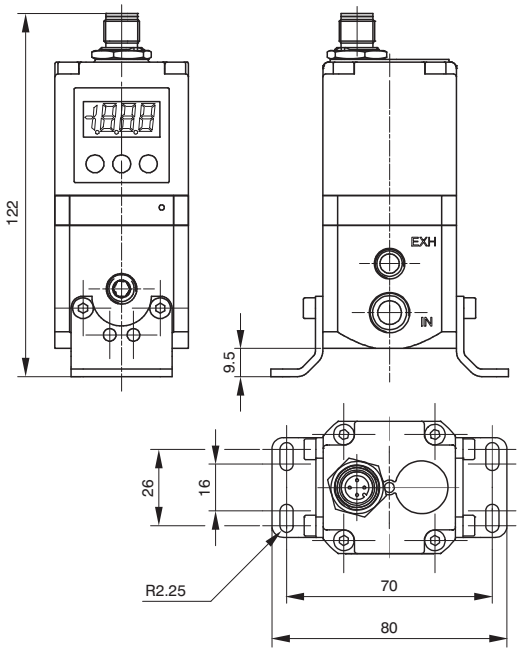

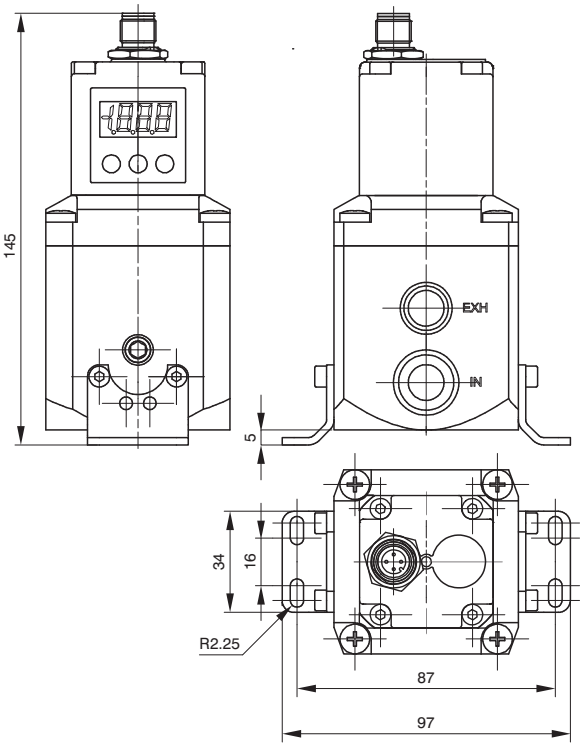

SIZE 3

Installation/Operation

PNEUMATIC CONNECTION

The compressed air is connected by means of M5 threaded holes (for size 0 regulators), G 1/4" threaded holes (for size 1 regulators) and G 1/2" threaded holes (for size 3 regulators) on the body.
Before making the connections, eliminate any impurities in the connecting pipes to prevent chippings or dust entering the unit. Do not supply the circuit with more than 10 bar pressure and make sure that the compressed air is dried (excessive condensate could cause the appliance to malfunction) and filtered at 5 micron. The supply pressure to the regulator must always be at least 1 bar greater than the desired outlet pressure.
If a silencer is applied to the discharge path the unit response time may change; periodically check that the silencer is not blocked and replace it if necessary.

ELECTRICAL CONNECTION

For the electrical connection a SUB-D 15-pole female or a M12 connector is used (accordingly to the model, to be ordered separately). Wire in accordance with the wiring diagram shown below.
Warning: INCORRECT CONNECTIONS MAY DAMAGE THE DEVICE

NOTES ON OPERATION

If the electric supply is interrupted, the outlet pressure is maintained at the set value. However, maintaining the exact value cannot be ensured as it is impossible to operate the solenoid valves.
In order to discharge the circuit downstream, zero the reference, make sure that the display shows a pressure value equal to zero and then disconnect the electric power supply.
A version of the device is available that exhausts the downstream circuit when the power supply is removed. (Option "A" at the end of the ordering code).
If the compressed-air supply is suspended and the electric power supply is maintained a whirring will be heard that is due to the solenoid valves; an operating parameter can be activated (P18) that triggers the regulator protection whenever the requested pressure is not reached within 4 seconds of the reference signal being sent. In this case the system will intervene to interrupt the control of the solenoid valves. Every twenty seconds, the unit will start the reset procedure until standard operating conditions have been restored.

3

TOP VIEW OF THE REGULATOR CONNECTOR

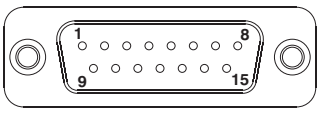

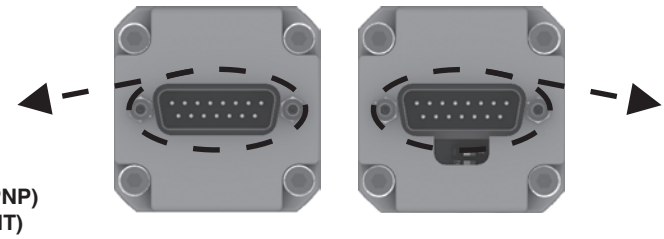

Standard version

CONNECTOR PIN:
1 = DIGITAL INPUT 1
2 = DIGITAL INPUT 2
3 = DIGITAL INPUT 3
4 = DIGITAL INPUT 4
5 = DIGITAL INPUT 5
6 = DIGITAL INPUT 6
7 = DIGITAL INPUT 7
8 = ANALOG INPUT / DIGITAL INPUT 8
9 = SUPPLY (24 VDC)
10 = DIGITAL OUTPUT (24 VDC PNP)
11 = ANALOG OUTPUT (CURRENT)
12 = ANALOG OUTPUT (VOLTAGE)
13 = Rx RS-232
14 = Tx RS-232
15 = GND

CANopen version with SUB-D 15 poles

CONNECTOR PIN :
1 = CAN_SHLD
2 = CAN_V+
3 = CAN_GND
4 = CAN_H
5 = CAN_L
6 = NC
7 = NC
8 = NC
9 = SUPPLY (24 VDC)
10 = CAN_SHLD
11 = CAN_V+
12 = CAN_GND
13 = CAN_H
14 = CAN_L
15 = GND

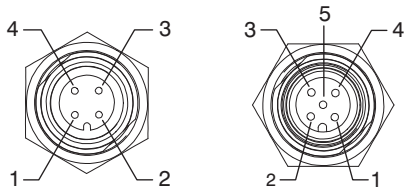

M12 4P MALE **M12 5P FEMALE**

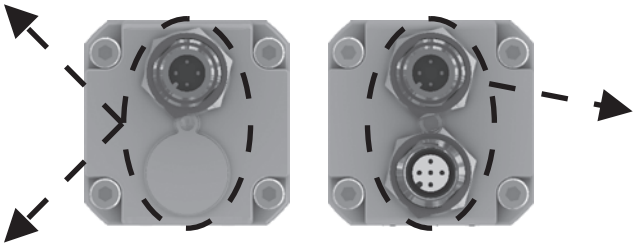

ECONOMIC version

CONNECTOR PIN:
1 = SUPPLY (24 VDC)
2 = NC
3 = GND
4 = ANALOG INPUT

M12 Standard version

CONNECTOR PIN:
1 = SUPPLY (24 VDC)
2 = OUTPUT (according to the model)
3 = GND
4 = ANALOG INPUT

CANopen version with M12 connector

MALE CONNECTOR PIN :
1 = +24 VDC
2 = NC
3 = GND
4 = NC

FEMALE CONNECTOR PIN :
1 = CAN_SHLD
2 = CAN_V+
3 = CAN_GND
4 = CAN_H
5 = CAN_L

ORDERING CODES
Standard version



17_E2N. _ . D . ____ . __

VARIANT
- = Standard Version (no addictional letter required)
- **E** = External pressure feedback
- **A** = Exhaust downstream pressure when power supply is removed
- **AE** = A Variant + E Variant

PRESSURE RANGE :
- **0001** = Range 0 - 1 bar
- **0005** = Range 0 - 5 bar
- **0009** = Range 0 - 9 bar

MANAGEMENT :
- **C** = Current signal (4-20 mA / 0-20 mA)
- **T** = Voltage signal (0-10 V / 0-5 V / 1-5 V)

SIZE :
- **0** = Size 0
- **1** = Size 1
- **3** = Size 3

ORDERING CODES
Version with CANopen **protocol**



17_E2N. S . C . ____ . __

VARIANT
- = Standard Version (no addictional letter required)
- **E** = External pressure feedback
- **A** = Exhaust downstream pressure when power supply is removed
- **AE** = A Variant + E Variant

SIZE :
- **0** = Size 0
- **1** = Size 1
- **3** = Size 3

PRESSURE RANGE :
- **0001** = Range 0 - 1 bar
- **0005** = Range 0 - 5 bar
- **0009** = Range 0 - 9 bar

Accessories

Model with SUB-D 15 poles connector	
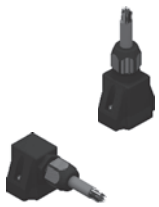	**5300.F15.00.00** : Straight connector + Casing IP65
	5300.F15.00.03 : Straight connector + Cable 3 meters
	5300.F15.00.05 : Straight connector + Cable 5 meters
	5300.F15.90.00 : 90° connector + Casing IP65
	5300.F15.90.03 : 90° connector + Cable 3 meters
	5300.F15.90.05 : 90° connector + Cable 5 meters

Fixing bracket
170M5


*** Whitout cable**

ORDERING CODES
Version with CANopen **protocol M12 connector**

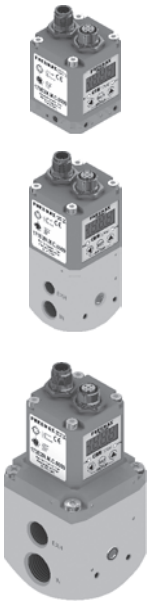

17_E2N. M . C . ____ . __

SIZE :
- **0** = Size 0
- **1** = Size 1
- **3** = Size 3

PRESSURE RANGE :
- **0001** = Range 0 - 1 bar
- **0005** = Range 0 - 5 bar
- **0009** = Range 0 - 9 bar

VARIANT
- = Standard Version (no addictional letter required)
- **E** = External pressure feedback
- **A** = Exhaust downstream pressure when power supply is removed
- **AE** = A Variant + E Variant

Note:
This model doesn't include the terminating resistor

Accessories

Model with M12 connector
POWER SUPPLY connector
Female straight connector M12A 4P
5312A.F04.00


Model with M12 connector
NETWORK connector
Male straight connector M12A 5P
5312A.M05.00


Fixing bracket
170M5


ORDERING CODES
ECONOMIC Version

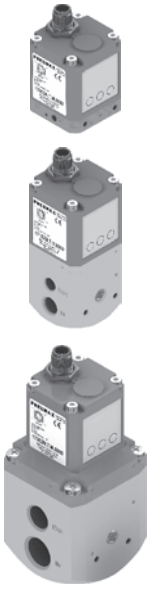

17_E2N. _ . M . ____ . __

SIZE :
- **0** = Size 0
- **1** = Size 1
- **3** = Size 3

MANAGEMENT :
- **C** = Current signal (4-20 mA)
- **T** = Voltage signal (0-10 V)

PRESSURE RANGE :
- **0001** = Range 0 - 1 bar
- **0005** = Range 0 - 5 bar
- **0009** = Range 0 - 9 bar

VARIANT
- = Standard Version (no addictional letter required)
- **E** = External pressure feedback
- **A** = Exhaust downstream pressure when power supply is removed
- **AE** = A Variant + E Variant

Note:
This model doesn't include display a keyboard. Therefore it is not possible to set the parameters. Unless specifically requested it is provided with all parameters set with default values. Personalisations are available.

Accessories

Model with M12 connector
POWER SUPPLY connector
Female straight connector M12A 4P
5312A.F04.00


Fixing bracket
170M5


ORDERING CODES
M12 Standard version

17_E2N. _ . _ . ____ . __

SIZE :
- **0** = Size 0
- **1** = Size 1
- **3** = Size 3

MANAGEMENT :
- **C** = Current signal (4-20 mA)
- **T** = Voltage signal (0-10 V)

OUTPUT
- **F** = Voltage analogue output
- **G** = Current analogue output
- **H** = Digital output

PRESSURE RANGE :
- **0001** = Range 0 - 1 bar
- **0005** = Range 0 - 5 bar
- **0009** = Range 0 - 9 bar

VARIANT
- = Standard Version (no addictional letter required)
- **E** = External pressure feedback
- **A** = Exhaust downstream pressure when power supply is removed
- **AE** = A Variant + E Variant

Note:
This model doesn't include display and keyboard. Therefore it is not possible to set the parameters. Unless specifically requested it is provided with all parameters set with default values. Personalisations are available.

Accessories

Model with M12 connector
POWER SUPPLY connector
Female straight connector M12A 4P
5312A.F04.00


Fixing bracket
170M5


3

General

Modern industrial applications constantly require more sophisticated and better performing pneumatic components .
Flexibility and adaptability are key factor when designing a machine. The possibility to change the application parameter during operation such as for example the speed of a cylinder or the force generated by a rotary actuator are beneficial to the designer.
In the past it was necessary to design complicated pneumatic circuits based on pneumatic logic elements which required a lot of space and complicated set up, today, thanks to the electronic proportional regulators such operations are extremely easy to achieve and offer even more flexibility.

Pneumax miniaturized proportional regulators series integrates all the main features of the 521 series with the exclusion of the display and analogue/digital output.
High precision in pressure regulation, fast response speed, assembling options and reduced dimensions are the main advantages.

Features

Pneumatic	Fluid	Air filtered at 5 micron and dehumidified	
	Minimum inlet pressure	Desired outlet pressure + 1 bar	
	Maximum inlet pressure	10 bar	
	Outlet pressure	Ordering code	009
		Pressure value	0 - 9 bar
	Nominal flowrate from 1 to 2 (6 bar Δp 1 bar)	7 Nl /min	
	Discharge flowrate (at 6 bar with 1 bar overpressure)	7 Nl /min	
	Air consumption	M5 / Ø4	
	Operating connection	M5 / Ø4	
	Exhaust connection	M5 / Ø4	
	Maximum fitting tightening	3 Nm	
Electric	Supply voltage	24VDC ± 10% (stabilised with ripple <1%)	
	Standby current consumption	55 mA	
	Current consumption with solenoid valves on	145 mA	
	Reference signal	Voltage*	0 - 10 V
		Current*	4 - 20 mA
	Input impedance	Voltage	10 KΩ
		Current	250 Ω
	Analog outputs voltage	0,2 - 10 V (10 V to 9 bar)	
	Connector	M8 4 poles	
Functional	Linearity	< ± 0,3 % F.S.	
	Hysteresis	<0,3 % F.S.	
	Repeatability	< ± 0,5 % F.S.	
	Sensitivity	< ± 0,5 % F.S.	
	Assembly position	Indifferent	
	Protection grade	IP65 (with casing fitted)	
	Ambient temperature	-5° - 50°C / 23° - 122°F	
Constructional	Body	Technopolymer	
	Seals	NBR	
	Cover for electrical part	Technopolymer	
	Weight	60 gr.	

*** Request during ordering process**

Proportional pressure regulator

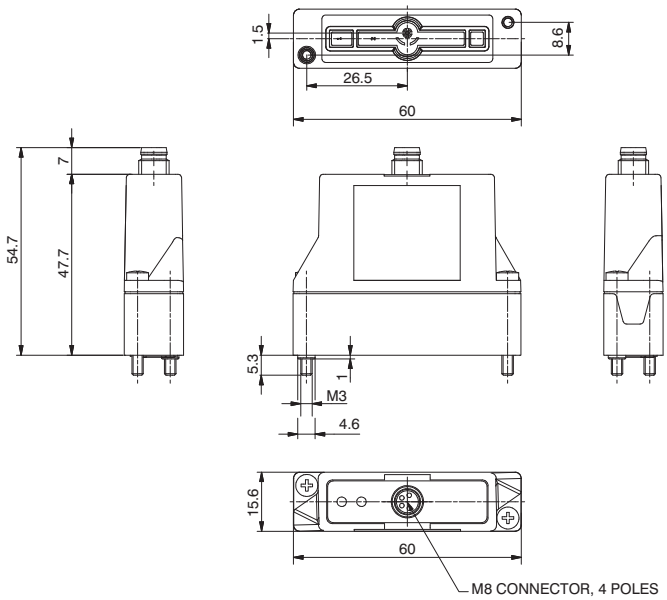

Ordering code

170E(P)M.(V).M.(G)

(P)	PROTECTION
	0 = Parameter 18 active
	2 = Parameter 18 not active
(V)	VERSION
	T = Voltage signal
	C = Current signal
(G)	PRESSURE RANGE
	001= Range 0 - 1 bar
	005= Range 0 - 5 bar
	009= Range 0 - 9 bar

M8 CONNECTOR, 4 POLES

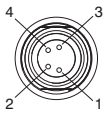

PIN	DESCRIPTION
1	+24 VDC
2	ANALOG INPUT
3	GND
4	ANALOG OUTPUT

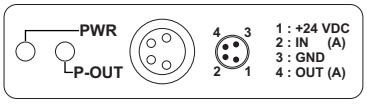

PWR	Green Led: The regulator is properly powered
P-OUT	Green Led: lights up when the outlet pressure is higher than the desired pressure minus 0.2 bar and less than the desired pressure more 0.2 bar

MOUNTING INTERFACE

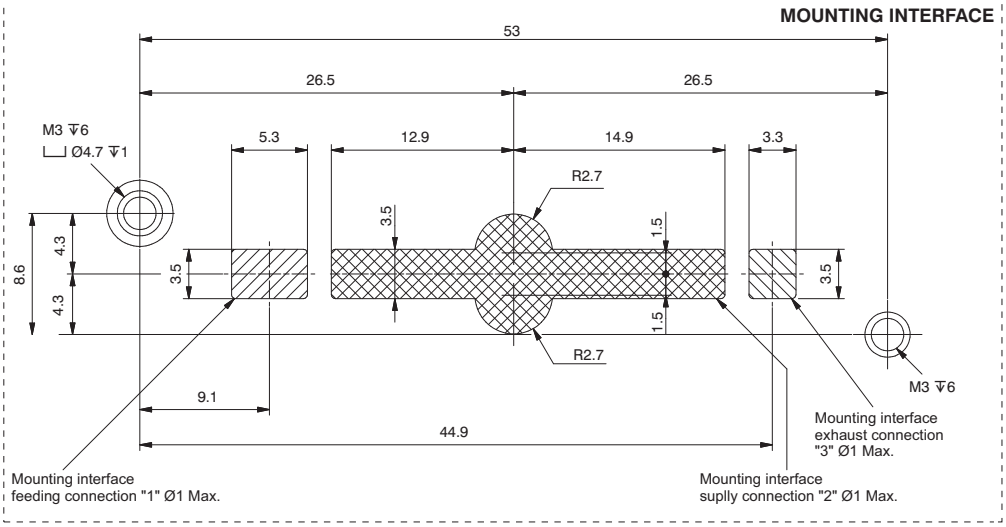

Proportional Pressure Regulator c/w M5 In-Line Single Base

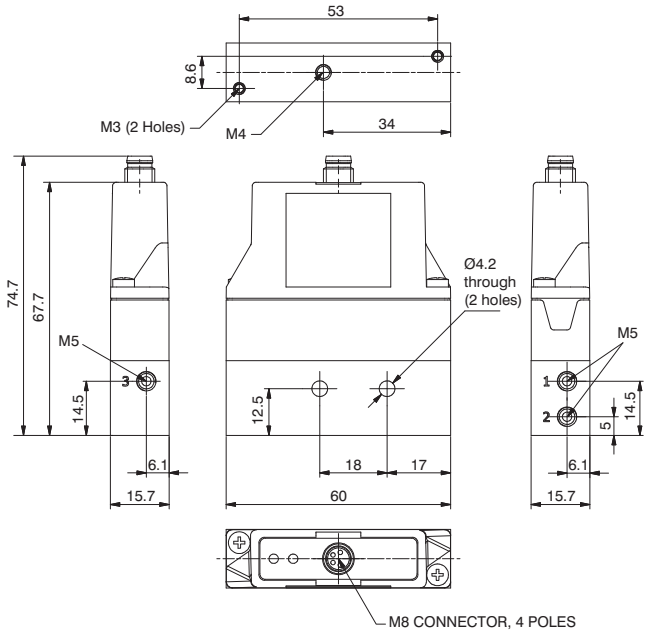

Ordering code

170EⓅM.Ⓥ.M.Ⓖ.FO

Ⓟ	PROTECTION
	0 = Parameter 18 active
	2 = Parameter 18 not active
Ⓥ	VERSION
	T = Voltage signal
	C = Current signal
Ⓖ	PRESSURE RANGE
	001= Range 0 - 1 bar
	005= Range 0 - 5 bar
	009= Range 0 - 9 bar

Weight: 110 gr.

M5 In-Line Single Base

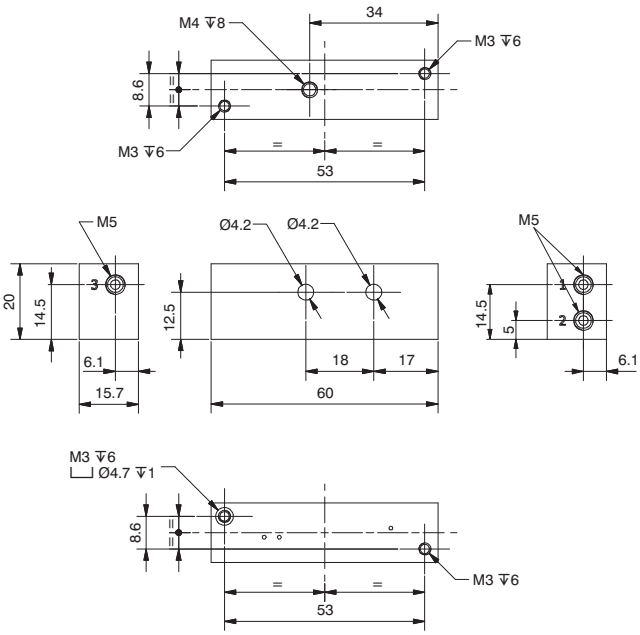

Ordering code

170M1.FO

Weight: 50 gr.

Proportional Pressure Regulator c/w M5 Bottom Entry Base

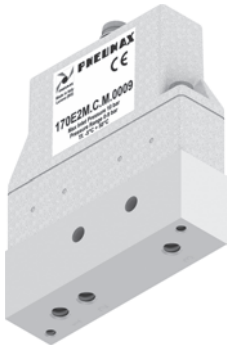

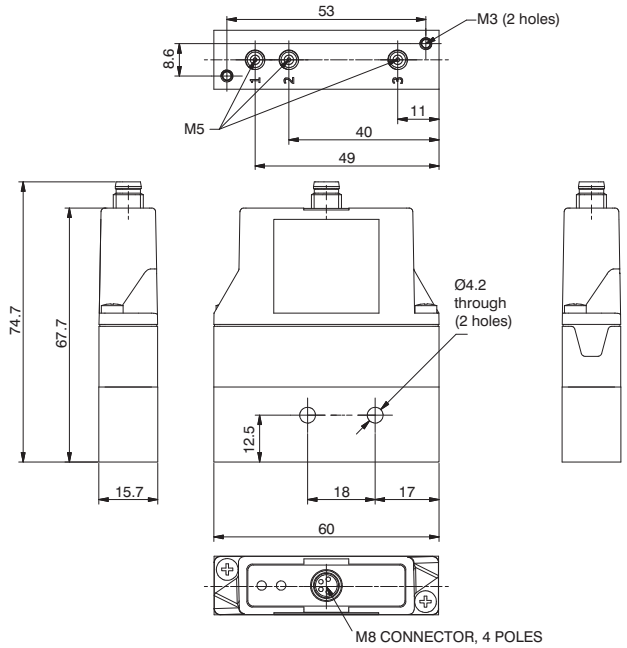

Ordering code

170EⓅM.Ⓥ.M.Ⓖ.FV

Ⓟ	PROTECTION
	0 = Parameter 18 active
	2 = Parameter 18 not active
Ⓥ	VERSION
	T = Voltage signal
	C = Current signal
Ⓖ	PRESSURE RANGE
	001= Range 0 - 1 bar
	005= Range 0 - 5 bar
	009= Range 0 - 9 bar

Weight: 110 gr.

M5 Bottom Entry Single Base

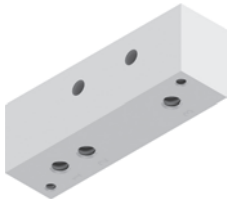

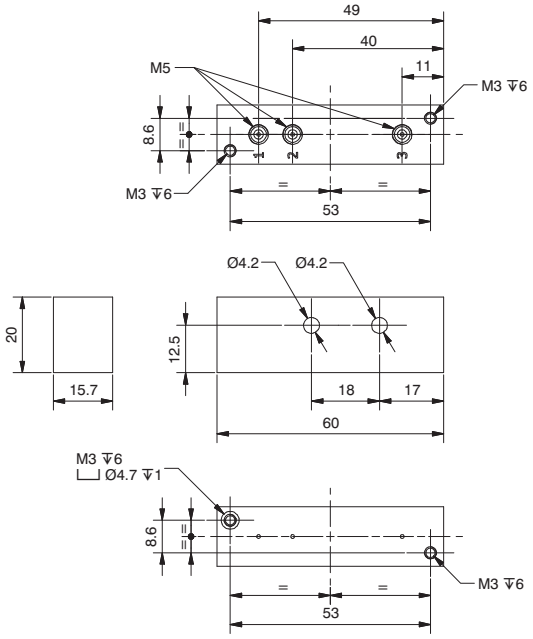

Ordering code

170M1.FV

Weight: 50 gr.

3

Proportional Pressure Regulator c/w Modular In-Line Base

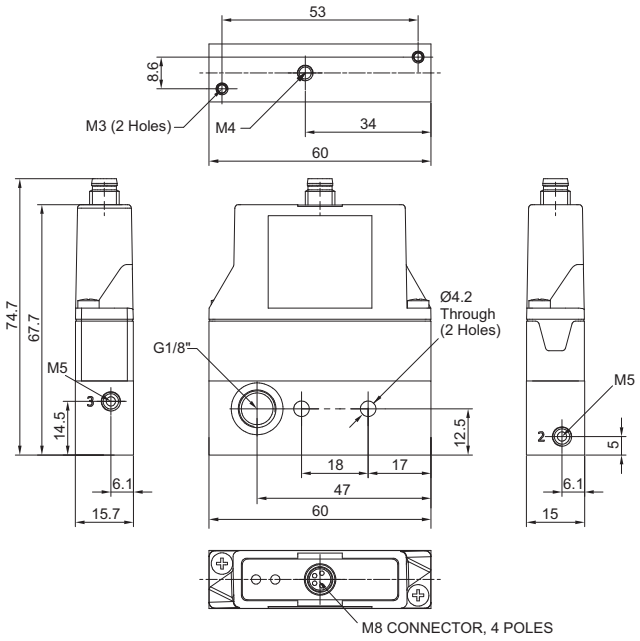

Ordering code

170E(P)M.(V).M.(G).FP

(P)	PROTECTION
	0 = Parameter 18 active
	2 = Parameter 18 not active
(V)	VERSION
	T = Voltage signal
	C = Current signal
(G)	PRESSURE RANGE
	001= Range 0 - 1 bar
	005= Range 0 - 5 bar
	009= Range 0 - 9 bar

Weight: 110 gr.

Single Modular In-Line Base

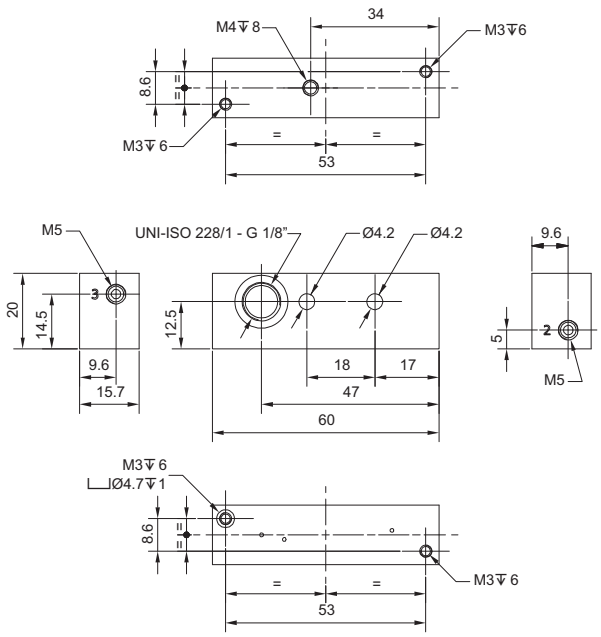

Ordering code

170M1.FP

Weight: 50 gr.

Proportional Pressure Regulator c/w 4mm In-Line Single base

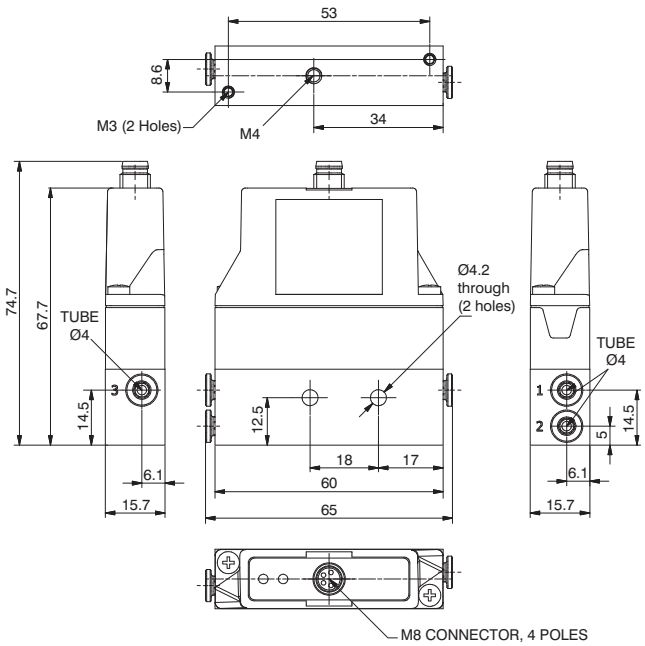

Ordering code

170EⓅM.Ⓥ.M.Ⓖ.TO

Ⓟ	PROTECTION
	0 = Parameter 18 active
	2 = Parameter 18 not active
Ⓥ	VERSION
	T = Voltage signal
	C = Current signal
Ⓖ	PRESSURE RANGE
	001= Range 0 - 1 bar
	005= Range 0 - 5 bar
	009= Range 0 - 9 bar

Weight: 110 gr.

Single 4mm In-Line Base

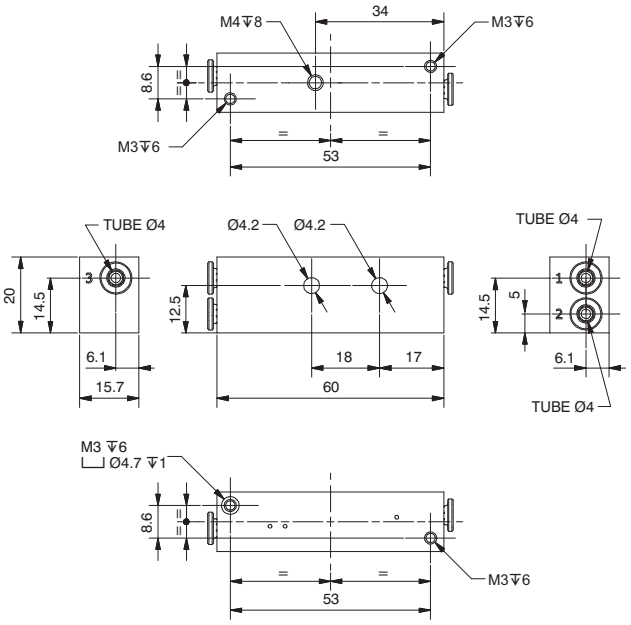

Ordering code

170M1.TO

Weight: 50 gr.

3

Proportional Pressure Regulator c/w 4mm Bottom Entry Single Base

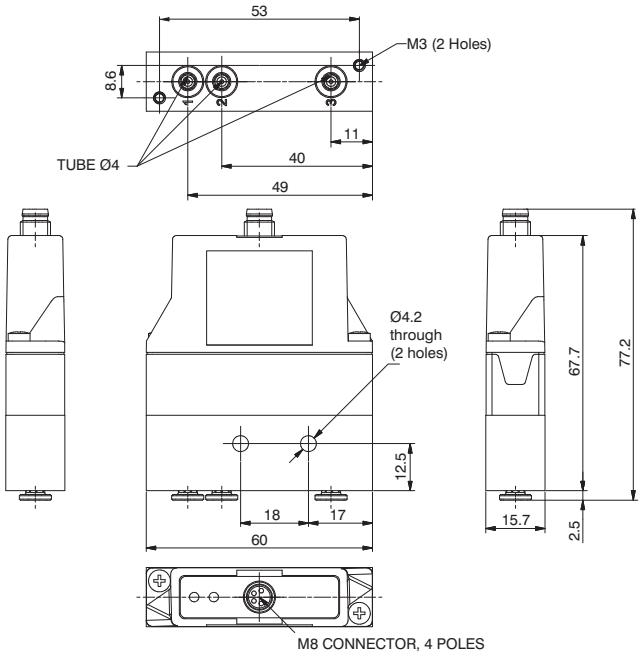

Ordering code

170EⓅM.Ⓥ.M.Ⓖ.TV

Ⓟ	PROTECTION
	0 = Parameter 18 active
	2 = Parameter 18 not active
Ⓥ	VERSION
	T = Voltage signal
	C = Current signal
Ⓖ	PRESSURE RANGE
	001= Range 0 - 1 bar
	005= Range 0 - 5 bar
	009= Range 0 - 9 bar

Weight: 110 gr.

Single 4mm Bottom Entry Base

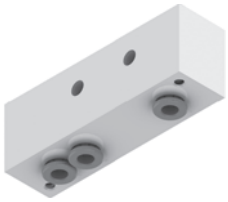

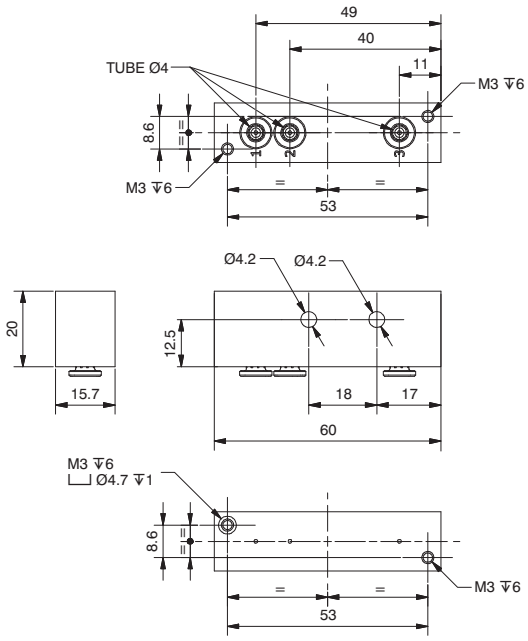

Ordering code

170M1.TV

Weight: 50 gr.

Proportional Pressure Regulator c/w 4mm In-Line Modular Base

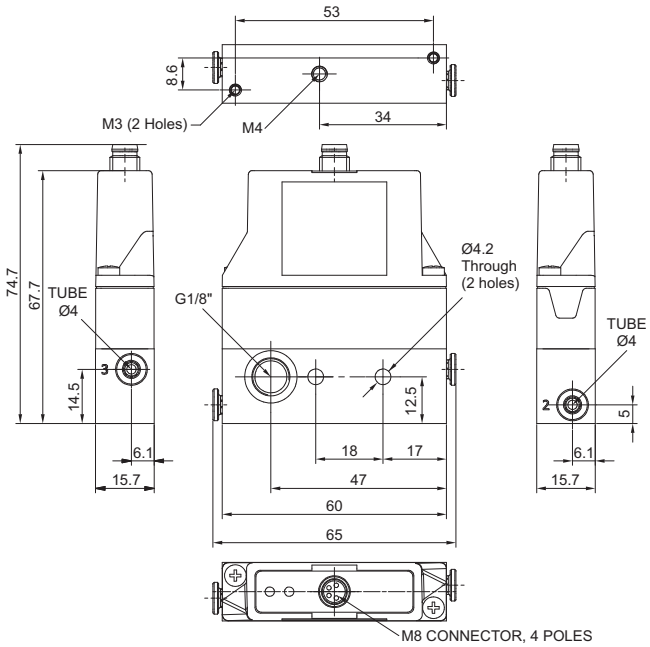

Ordering code

170EⓅM.Ⓥ.M.Ⓖ.TP

Ⓟ	PROTECTION
	0 = Parameter 18 active
	2 = Parameter 18 not active
Ⓥ	VERSION
	T = Voltage signal
	C = Current signal
Ⓖ	PRESSURE RANGE
	001= Range 0 - 1 bar
	005= Range 0 - 5 bar
	009= Range 0 - 9 bar

Weight: 110 gr.

Single 4mm In-Line Modular Base

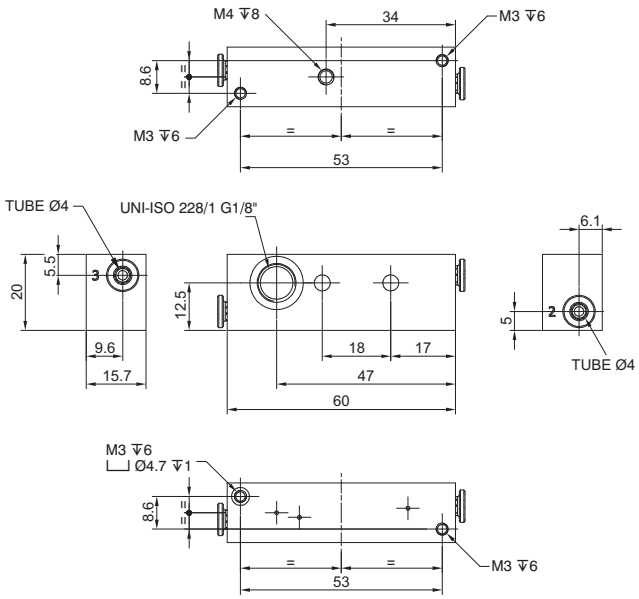

Ordering code

170M1.TP

Weifght: 50 gr.

3

Proportional pressure regulator with external feedback

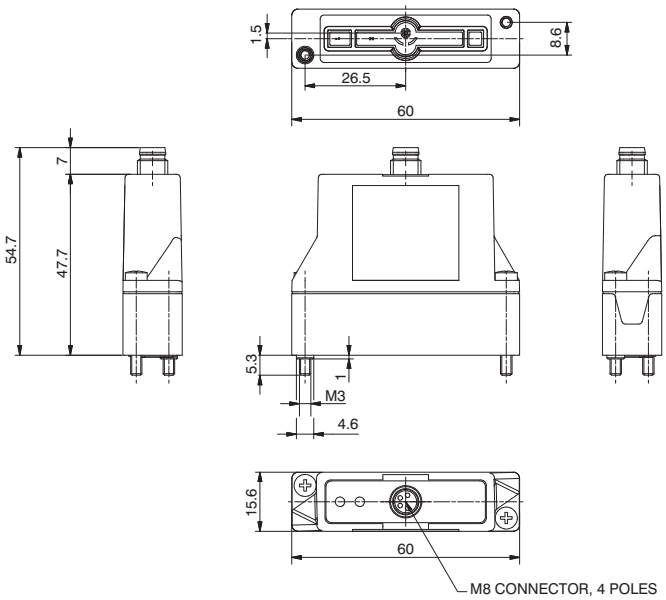

Ordering code

170E(P)M.(V).M.(G).E

(P)	PROTECTION
	0 = Parameter 18 active
	2 = Parameter 18 not active
(V)	VERSION
	T = Voltage signal
	C = Current signal
(G)	PRESSURE RANGE
	001= Range 0 - 1 bar
	005= Range 0 - 5 bar
	009= Range 0 - 9 bar

M8 CONNECTOR, 4 POLES

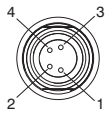

PIN	DESCRIPTION
1	+24 VDC
2	ANALOG INPUT
3	GND
4	ANALOG OUTPUT

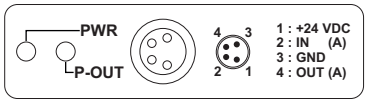

PWR	Green Led: The regulator is properly powered
P-OUT	Green Led: lights up when the outlet pressure is higher than the desired pressure minus 0.2 bar and less than the desired pressure more 0.2 bar

MOUNTING INTERFACE

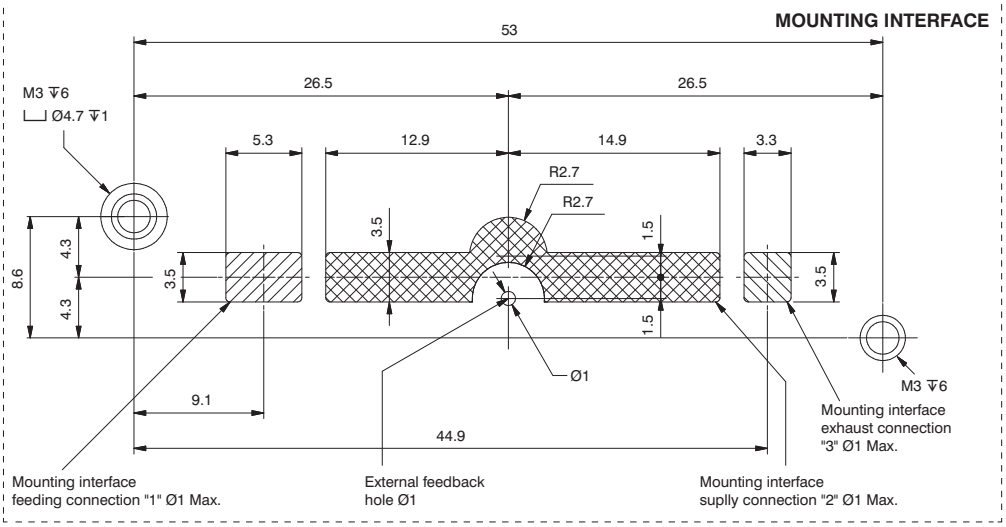

Proportional Pressure Regulator c/w M5 In-Line Single Base with External Feedback

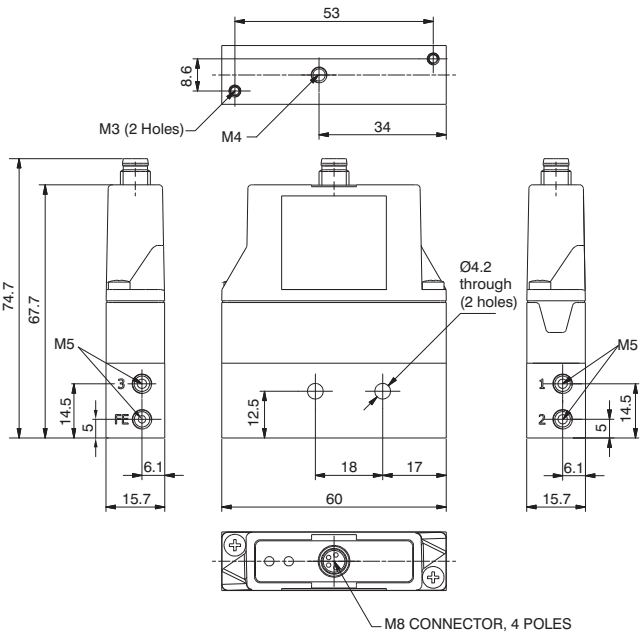

Ordering code

170EⓅM.Ⓥ.M.Ⓖ.EFO

Ⓟ	PROTECTION
	0 = Parameter 18 active
	2 = Parameter 18 not active
Ⓥ	VERSION
	T = Voltage signal
	C = Current signal
Ⓖ	PRESSURE RANGE
	001= Range 0 - 1 bar
	005= Range 0 - 5 bar
	009= Range 0 - 9 bar

Weight: 110 gr.

Single M5 In-Line Base with External Feedback

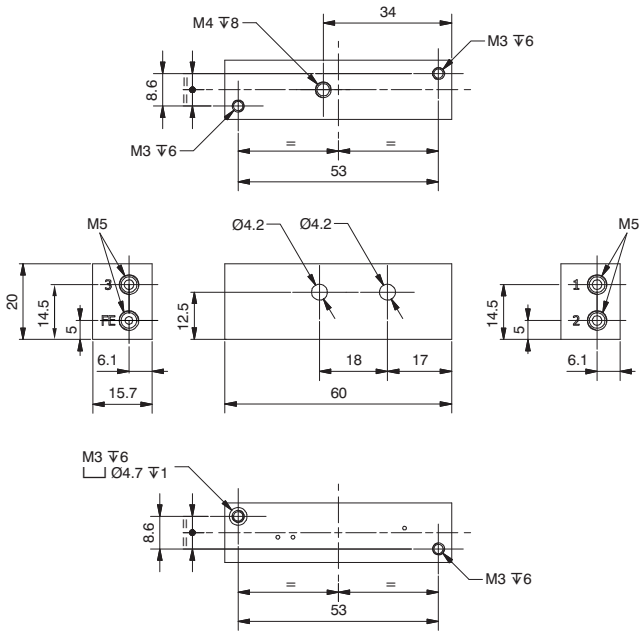

Ordering code

170M1.EFO

Weight: 50 gr.

3

Proportional Pressure Regulator c/w M5 Bottom Entry Base with External Feedback

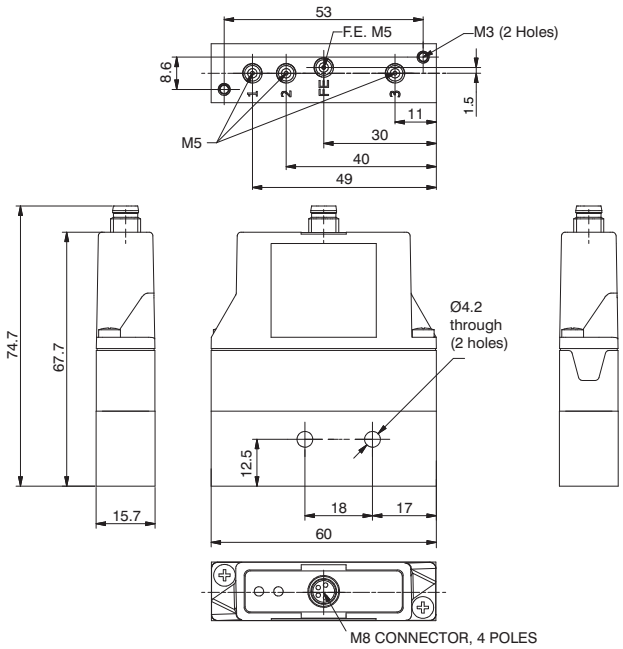

Ordering code

170EⓅM.Ⓥ.M.Ⓖ.EFV

Ⓟ	PROTECTION
	0 = Parameter 18 active
	2 = Parameter 18 not active
Ⓥ	VERSION
	T = Voltage signal
	C = Current signal
Ⓖ	PRESSURE RANGE
	001= Range 0 - 1 bar
	005= Range 0 - 5 bar
	009= Range 0 - 9 bar

Weight: 110 gr.

Single M5 Bottom Entry Base with External Feedback

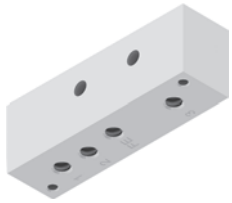

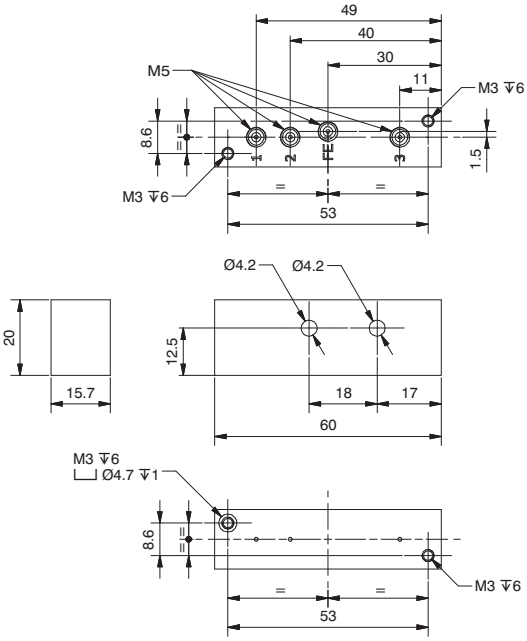

Ordering code

170M1.EFV

Weight: 50 gr.

Proportional Pressure Regulator c/w 4mm In-Line Single Base with External Feedback

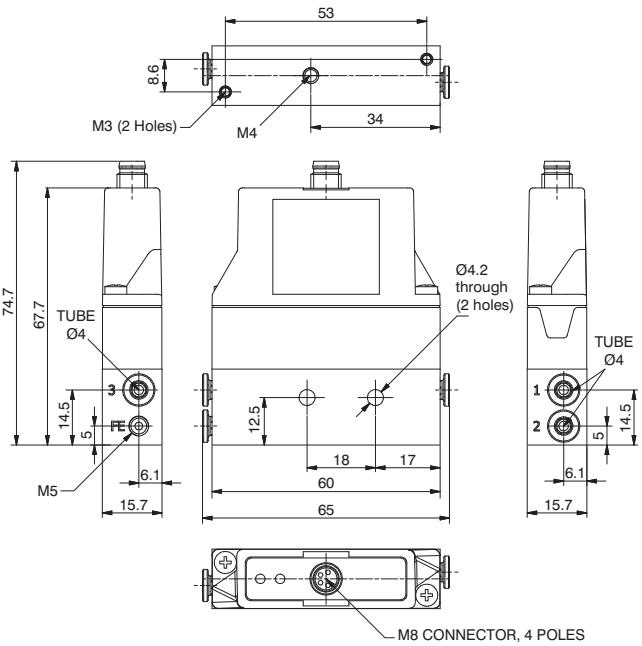

Ordering code

170EⓅM.Ⓥ.M.Ⓖ.ETO

Ⓟ	PROTECTION
	0 = Parameter 18 active
	2 = Parameter 18 not active
Ⓥ	VERSION
	T = Voltage signal
	C = Current signal
Ⓖ	PRESSURE RANGE
	001= Range 0 - 1 bar
	005= Range 0 - 5 bar
	009= Range 0 - 9 bar

Weight: 110 gr.

Single 4mm In-Line Base with External Feedback

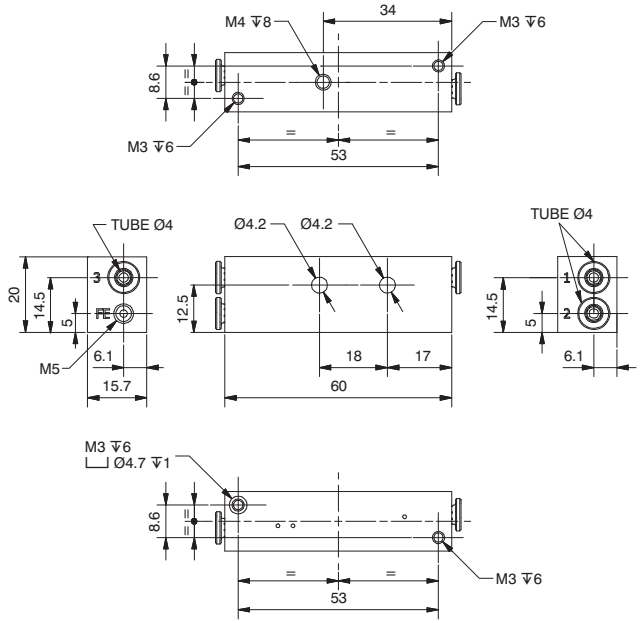

Ordering code

170M1.ETO

Weight: 50 gr.

Proportional Pressure Regulator c/w 4mm Bottom Entry Single Base with External Feedback

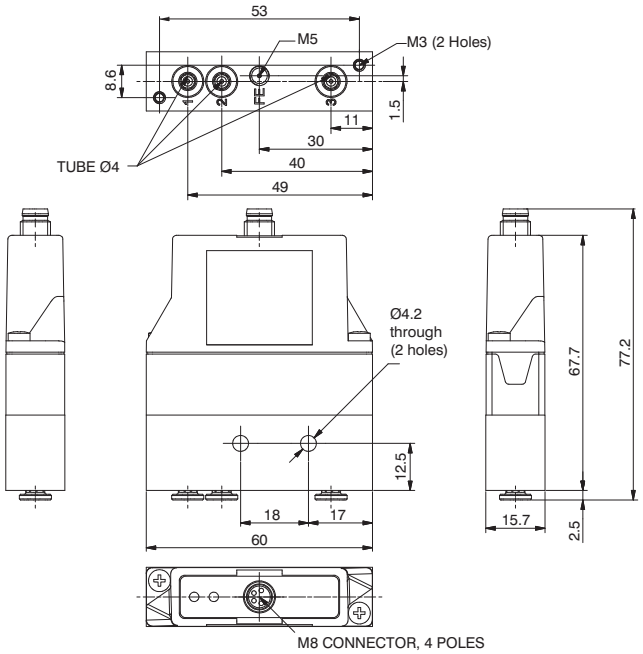

Ordering code

170EⓅM.Ⓥ.M.Ⓖ.ETV

Ⓟ	PROTECTION
	0 = Parameter 18 active
	2 = Parameter 18 not active
Ⓥ	VERSION
	T = Voltage signal
	C = Current signal
Ⓖ	PRESSURE RANGE
	001= Range 0 - 1 bar
	005= Range 0 - 5 bar
	009= Range 0 - 9 bar

Weight: 110 gr.

Single 4mm Bottom Entry Base with External Feedback

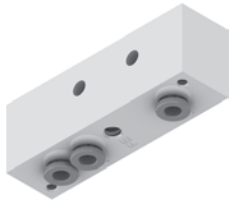

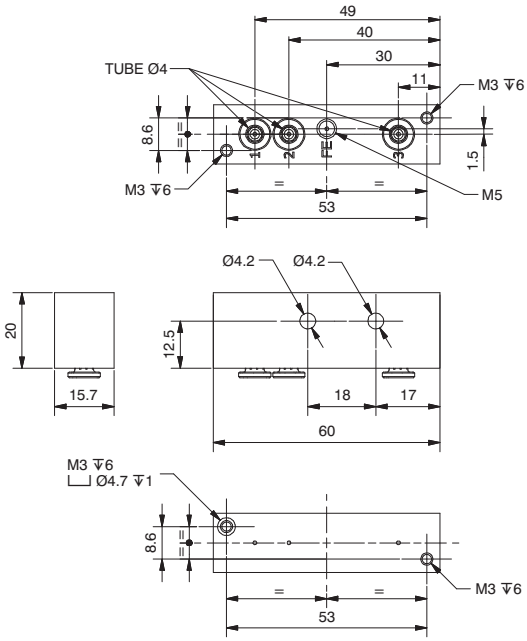

Ordering code

170M1.ETV

Weight: 50 gr.

Coding For Proportional Pressure Regulator Modular Manifold

It is possible to assemble a manifold of Miniature Proportional Regulators to a maximum of 12 Regulators.
For the coding of the Manifold, refer to the configuration Table below.
The Regulators are feed by a single supply pressure via the G1/8" connection. In the Manifold, the Pressure Regulators operate independently, the output pressure is supplied via the M5 or 4mm output connection depending on the model requested. The electrical signal is controlled via the M8 connector.
There are also configured single bases up to a maximum of 12 positions with power supplies and independent consumptions (See following pages).

G	1	7	0	_	_	_	M	_	_	_	_	P	_
Group	**Series**		**Size**	**Parameter 18**	**N. Places**	**Control Type**	**Electrical connection**	**Pressure range**			**Connection**	**Version**	**Options**
				0=Eco P18 On	**A**=02	**T**=Voltage		**001**=0 - 1 bar			**T**=Tube Ø4		= Standard *
				2=Eco P18 Off	**B**=03	**C**=Current		**005**=0 - 5 bar			**F**=M5 Thread		**E**= External feedback
					C=04			**009**=0 - 9 bar					* no additional letter required
					D=05								
					E=06								
					F=07								
					G=08								
					H=09								
					I=10								
					L=11								
					M=12								

Example	
Code	G1700ITM009FP
Description	10 Position Miniature Proportional Pressure Regulator, Voltage controlled with M5 Outputs

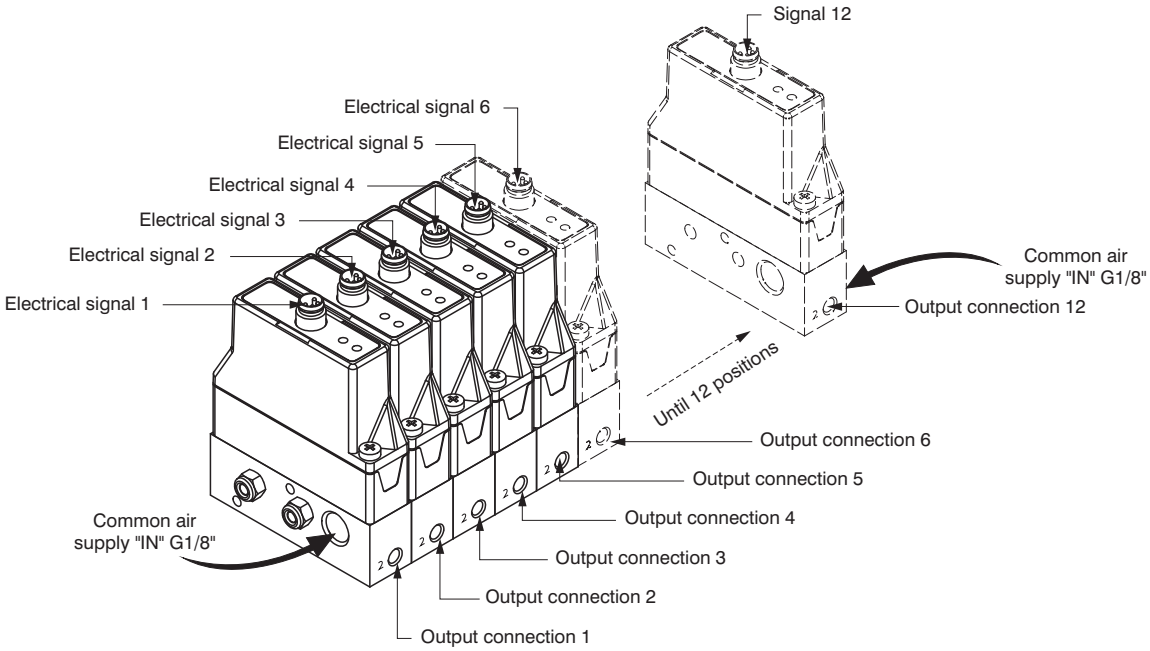

Multiple M5 In-Line Base

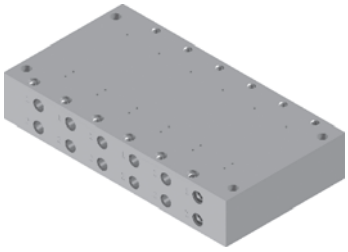

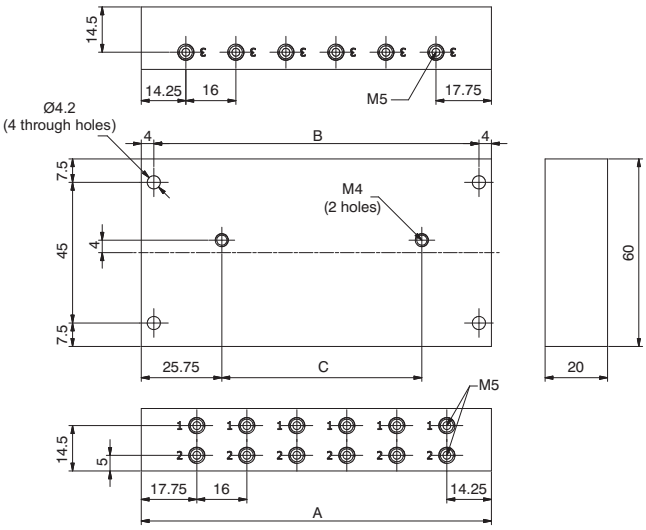

	N° PLACES								
DIMEN.	2 PLA.	3 PLA.	4 PLA.	5 PLA.	6 PLA.	7 PLA.	8 PLA.	9 PLA.	10 PLA.
A	48	64	80	96	112	128	144	160	176
B	40	56	72	88	104	120	136	152	168
C	0	16	32	48	64	80	96	112	128

Ordering code

170MⓃ.FO

	N. PLACES
Ⓝ	2=2 places (weight gr.100)
	3=3 places (weight gr.150)
	4=4 places (weight gr.200)
	5=5 places (weight gr.250)
	6=6 places (weight gr.300)
	7=7 places (weight gr.350)
	8=8 places (weight gr.400)
	9=9 places (weight gr.450)
	10=10 places (weight gr. 500)

Multiple M5 Bottom Entry Base

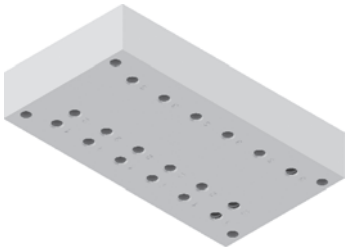

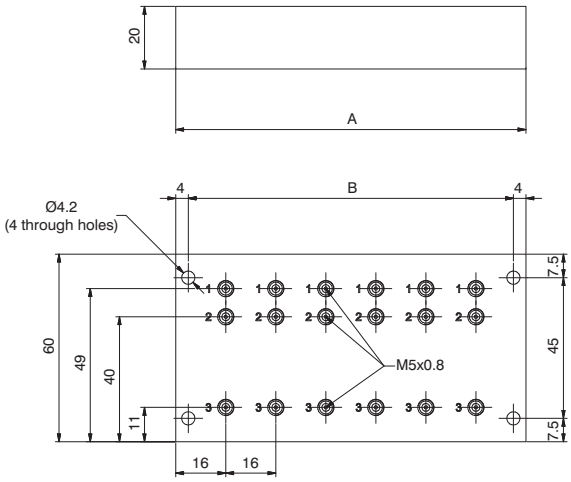

	N° PLACES								
DIMEN.	2 PLA.	3 PLA.	4 PLA.	5 PLA.	6 PLA.	7 PLA.	8 PLA.	9 PLA.	10 PLA.
A	48	64	80	96	112	128	144	160	176
B	40	56	72	88	104	120	136	152	168

Ordering code

170MⓃ.FV

	N. PLACES
Ⓝ	2=2 places (weight gr.100)
	3=3 places (weight gr.150)
	4=4 places (weight gr.200)
	5=5 places (weight gr.250)
	6=6 places (weight gr.300)
	7=7 places (weight gr.350)
	8=8 places (weight gr.400)
	9=9 places (weight gr.450)
	10=10 places (weight gr. 500)

Multiple M5 In-Line Base with External Feedback

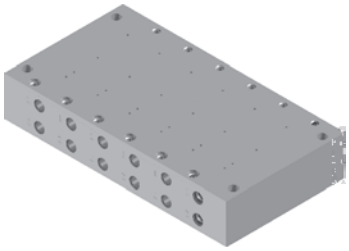

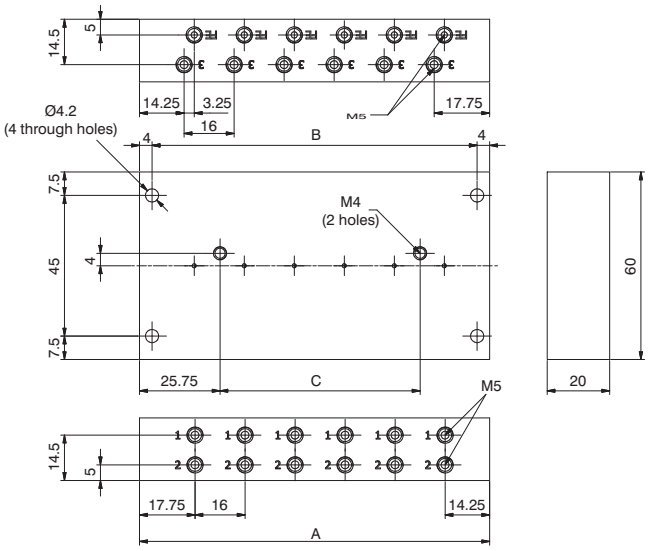

	N° PLACES								
DIMEN.	2 PLA.	3 PLA.	4 PLA.	5 PLA.	6 PLA.	7 PLA.	8 PLA.	9 PLA.	10 PLA.
A	48	64	80	96	112	128	144	160	176
B	40	56	72	88	104	120	136	152	168
C	0	16	32	48	64	80	96	112	128

Ordering code

170MⓃ.EFO

	N. PLACES
Ⓝ	2=2 places (weight gr.100)
	3=3 places (weight gr.150)
	4=4 places (weight gr.200)
	5=5 places (weight gr.250)
	6=6 places (weight gr.300)
	7=7 places (weight gr.350)
	8=8 places (weight gr.400)
	9=9 places (weight gr.450)
	10=10 places (weight gr. 500)

Multiple M5 Bottom Entry Base with External Feedback

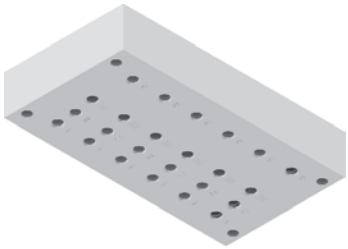

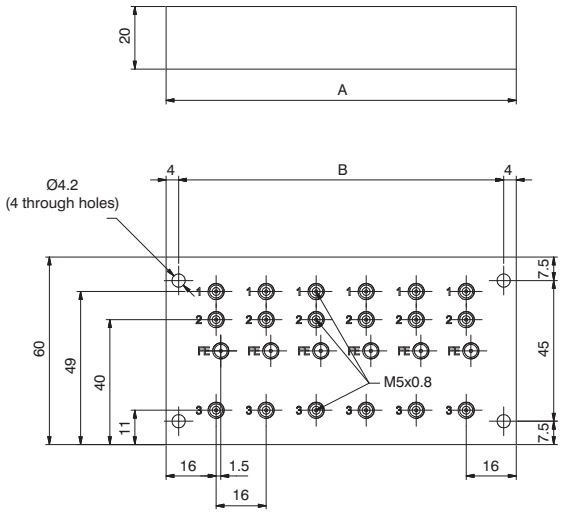

	N° PLACES								
DIMEN.	2 PLA.	3 PLA.	4 PLA.	5 PLA.	6 PLA.	7 PLA.	8 PLA.	9 PLA.	10 PLA.
A	48	64	80	96	112	128	144	160	176
B	40	56	72	88	104	120	136	152	168

Ordering code

170MⓃ.EFV

	N. PLACES
Ⓝ	2=2 places (weight gr.100)
	3=3 places (weight gr.150)
	4=4 places (weight gr.200)
	5=5 places (weight gr.250)
	6=6 places (weight gr.300)
	7=7 places (weight gr.350)
	8=8 places (weight gr.400)
	9=9 places (weight gr.450)
	10=10 places (weight gr. 500)

Clip

Ordering code

800.00

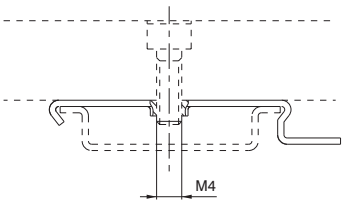

Weight gr. 5

Mini digital pressure switch

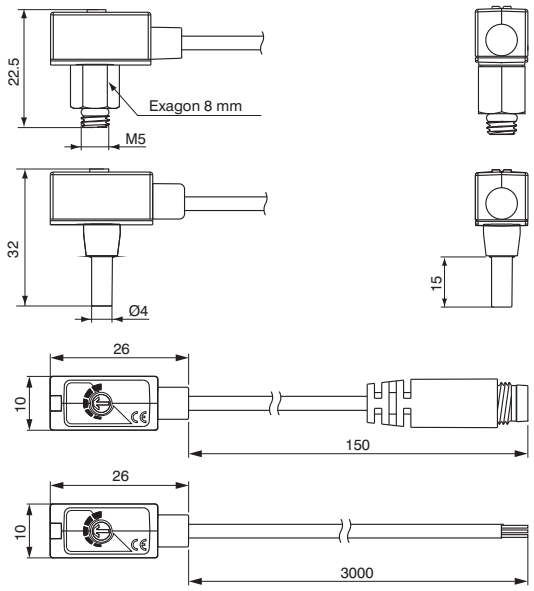

Ordering code

DS.10.P.B.Ⓒ.Ⓛ.Ⓞ

Ⓒ	CONNECTION
	F4=Male M5
	R4=Plug-in connection Ø4
Ⓛ	CABLE LENGTH
	A=150 mm *
	E=3000 mm **
Ⓞ	OPTIONS
	0=Without connector
	1=With connector M8 male 3 Pin

* only with M8 connector
** only without connector

Technical features

Working pressure range		0 - 0.6 mPa
Regulation pressure range		0 - 0.6 mPa
Maximum supported pressure		1.5 mPa
Allowed fluids		Air, non-corrosive gases, non-combustible gases
Supply voltage		From 12 to 30 VDC ±10%
Current consumption		≤ 10mA
Digital output		PNP N.O. 1 outputs Maximum load current: 80mA Maximum supply voltage: 30VDC Voltage drop: ≤0.8V
Repeatability (Digital output)		± 1% Full Scale
Digital output	Type of hysteresis	fixed
	Hysteresis	3% Full Scale max.
Response time		1ms
Protection from short circuit at output		Present
Method of setting threshold		Adjustable, trimmer
Indicator		LED red (output)
Ingress protection rating	Protection class	IP40
	Ambient temperature	Operational: 0 - 60°C, Storage: -20 - 70°C (without ice or condensation)
	Ambient humidity	Operational/Storage: 35 - 85% (without condensation)
	Vibration	Total amplitude 1.5mm.,10Hz-55Hz-10Hz scanning for 1 minute, 2 hours in each direction of X, Y and Z
	Impacts/shocks	980m/s² (100G), 3 times in each direction of X, Y and Z
Temperature characteristics		±2% Full Scale in a range between 0 - 50°C
Type of connection		Male M5x0.8, Plug-in connection Ø4
Electrical cable		Oilproof cable, 3 wires (0.18mm²), Ø2.6mm
Weight		Approximately 50 gr. (with 3 metres of cable)

Output circuit wiring scheme

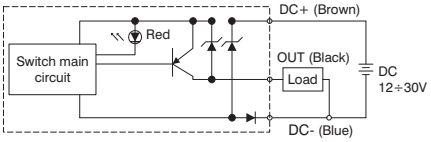

Panel-mounted digital pressure switch

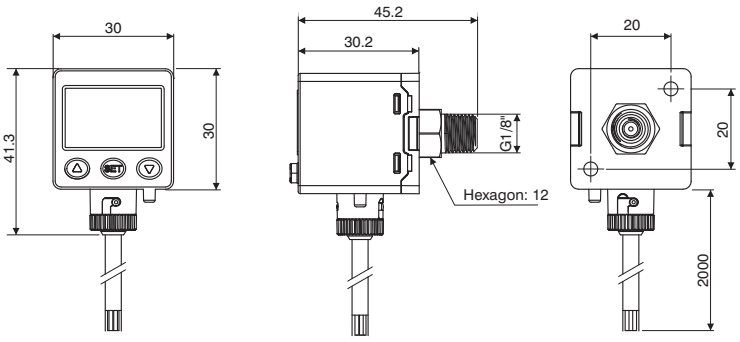

Ordering code

DS.45.P.Ⓤ.F3.D.0

Ⓤ	OUTPUTS E=2 PNP outputs + Analog output (4 / 20 mA) L=2 PNP outputs + copy function

Technical features		
Working pressure range		0.000 - 1.000 mPa
Regulation pressure range		-0.100 - 1.000 mPa
Maximum supported pressure		1.5 mPa
Allowed fluids		Air, non-corrosive gases, non-combustible gases
Pressure calibration sensitivity	kPa	0.1
	kgf/cm²	0.001
	bar	0.001
	psi	0.01
	InHg	0.1
Supply voltage		From 12 to 24 VDC
Current consumption		≤40mA (without load)
Digital output		PNP N.O. 2 outputs Maximum load current: 125mA Maximum supply voltage: 24VDC Voltage drop: ≤1.5V
Repeatability (Digital output)		± 0.2% Full Scale ± 1 digit
Digital output	Type of hysteresis	Settable
	Hysteresis	from 0.001 to 0.008 bar
Response time		≤2,5 ms (anti-interference function: 25ms, 100ms, 250ms, 500ms, 1000ms and 1500ms selectable)
Protection from short circuit at output		Present
Display		Display with 3 1/2 digits (red/Green)
Indicator precision		±2% F. S. ±1 digit
Indicator		LED Orange (output1) LED Orange (output2)
Analog output		Output current: 4÷20mA ±2.5% F. S. Linearity: ±1% F. S. Maximum load resistance: 250Ω supply at 12V and 600Ω supply at 24V Minimum load resistance: 50Ω
Ingress protection rating	Protection class	IP65
	Ambient temperature	Operational: 0 - 50°C, Storage: -10 - 60°C (without ice or condensation)
	Ambient humidity	Operation/Storage: 35 - 85% (without condensation)
	Supported voltage	1000VAC in 1min. (between body and cable)
	Insulation resistance	50MΩ (at 500VDC, between body and cable)
	Vibration	Total amplitude 1.5mm or 10G,10Hz-55Hz-10Hz scanning for 1 minute, 2 hours in each direction of X, Y and Z
	Impacts/shocks	100m/s² (10G), 3 times in each direction of X, Y and Z
Temperature characteristics		±2.5% Full Scale in a range between 0 - 50°C
Type of connection		G1/8" (BSPP), M5 female
Electrical cable		Oil resistant cable (internal 0.15mm²)
Weight		Approximately 86 gr. (with 2 metres of cable)

Output circuit wiring scheme

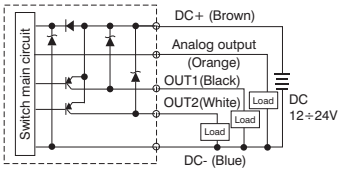

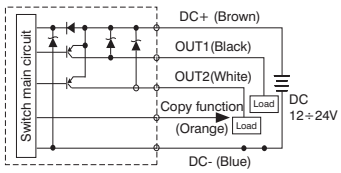

Accessories

Fastening bracket

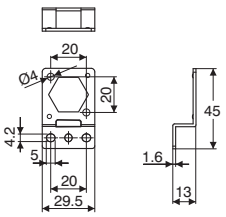

Ordering code
DS.BT10

Panel mount adapter

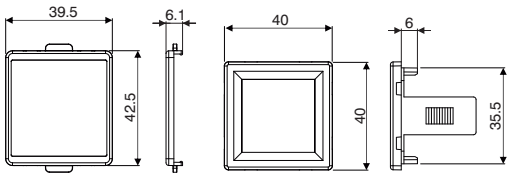

Ordering code
DS.PAE

Fastening bracket

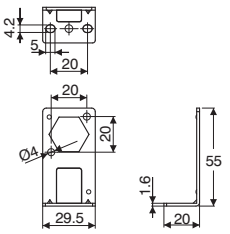

Ordering code
DS.BT11

Panel mount adapter with screen protection

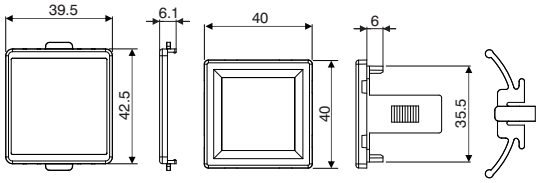

Ordering code
DS.PAF

Digital pressure gauge

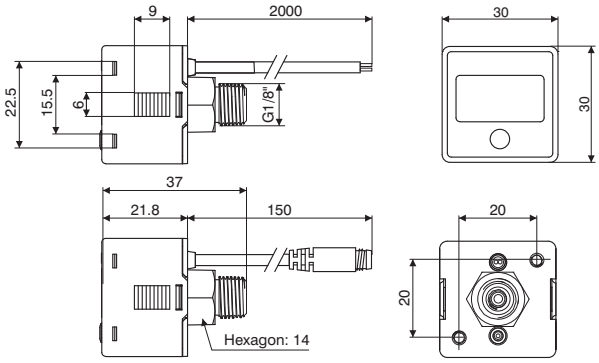

Ordering code

DS.61.P.I.F1.L.O

L	CABLE LENGTH
	A=150 mm *
	D=2000 mm **
O	OPTIONS
	0=Without connector
	2=With connector M8 male 4 Pin

* only with M8 connector
** only without connector

Technical features

Working pressure range		0.000 - 1.000 mPa
Regulation pressure range		-0.100 - 1.000 mPa
Maximum supported pressure		1.5 mPa
Allowed fluids		Air, non-corrosive gases, non-combustible gases
Pressure calibration sensitivity	kPa	1
	kgf/cm²	0.01
	bar	0.01
	psi	0.1
Supply voltage		From 12 to 24 VDC ± 10%
Current consumption		10mA
Repeatability		± 1% Full Scale ±1 digit
Display		Display with 3 1/2 digits (sampling 5 times per sec.)
Indicator precision		±2% F. S. ±1 digit (at ambient temperature of 25°C ±3°C)
Ingress protection rating	Protection class	IP65 (only with connected air pipe)
	Ambient temperature	Operational: 0 - 50°C, Storage: -10 - 60°C (without ice or condensation)
	Ambient humidity	Operation/Storage: 35 - 85% (without condensation)
	Supported voltage	1000VAC in 1 min. (between body and cable)
	Insulation resistance	50MΩ (at 500VDC, between body and cable)
	Vibration	Total amplitude 1.5mm or 10G,10Hz-55Hz-10Hz scanning for 1 minute,2 hours in each direction of X,Y and Z
	Impacts/shocks	100m/s² (10G), 3 times in each direction of X, Y and Z
Temperature characteristics		±2% Full Scale in a range between 0 - 50°C
Type of connection		R1/8", M5 female
Electrical cable		Oil resistant cable (internal 0.15mm²)
Weight		Approximately 60 gr. (with 2 metres of cable) and Approximately 40 gr. (with M8 4 pin male connector)

Output circuit wiring scheme

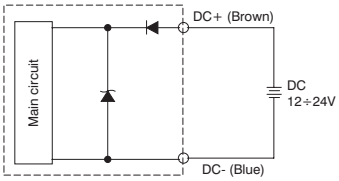

Accessories

Fastening bracket

Ordering code
DS.BT5

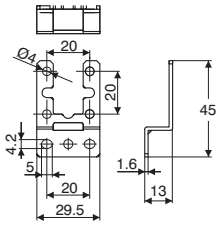

Panel mount adapter

Ordering code
DS.PAC

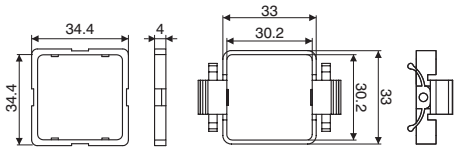

Fastening bracket

Ordering code
DS.BT6

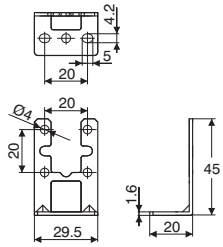

Panel mount adapter with screen protection

Ordering code
DS.PAD

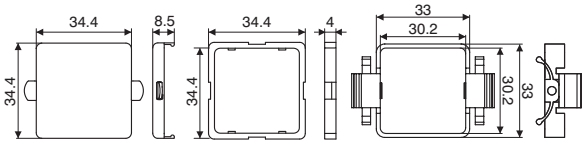

Digital pressure gauge

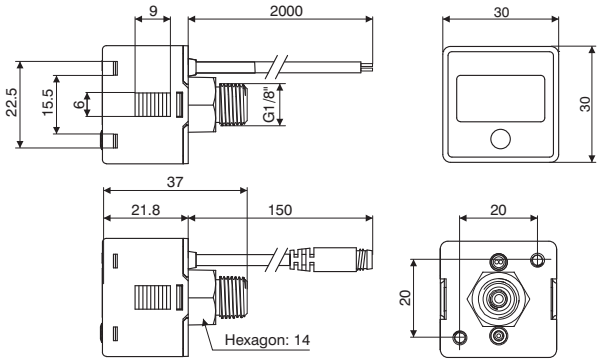

Ordering code

DS.61.P.I.F1.Ⓛ.◎

Ⓛ	CABLE LENGTH
	A=150 mm *
	D=2000 mm **
◎	OPTIONS
	0=Without connector
	2=With connector M8 male 4 Pin

* only with M8 connector
** only without connector

Technical features

Working pressure range		0.000 - 1.000 mPa
Regulation pressure range		-0.100 - 1.000 mPa
Maximum supported pressure		1.5 mPa
Allowed fluids		Air, non-corrosive gases, non-combustible gases
Pressure calibration sensitivity	kPa	1
	kgf/cm²	0.01
	bar	0.01
	psi	0.1
Supply voltage		From 12 to 24 VDC ± 10%
Current consumption		10mA
Repeatability		± 1% Full Scale ±1 digit
Display		Display with 3 1/2 digits (sampling 5 times per sec.)
Indicator precision		±2% F. S. ±1 digit (at ambient temperature of 25°C ±3°C)
Ingress protection rating	Protection class	IP65 (only with connected air pipe)
	Ambient temperature	Operational: 0 - 50°C, Storage: -10 - 60°C (without ice or condensation)
	Ambient humidity	Operation/Storage: 35 - 85% (without condensation)
	Supported voltage	1000VAC in 1 min. (between body and cable)
	Insulation resistance	50MΩ (at 500VDC, between body and cable)
	Vibration	Total amplitude 1.5mm or 10G,10Hz-55Hz-10Hz scanning for 1 minute,2 hours in each direction of X,Y and Z
	Impacts/shocks	100m/s² (10G), 3 times in each direction of X, Y and Z
Temperature characteristics		±2% Full Scale in a range between 0 - 50°C
Type of connection		R1/8", M5 female
Electrical cable		Oil resistant cable (internal 0.15mm²)
Weight		Approximately 60 gr. (with 2 metres of cable) and Approximately 40 gr. (with M8 4 pin male connector)

Output circuit wiring scheme

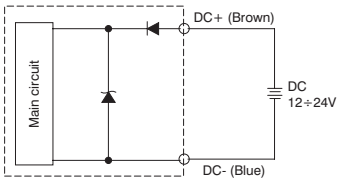

Accessories

Fastening bracket

Ordering code
DS.BT5

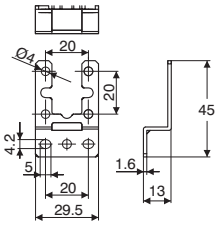

Panel mount adapter

Ordering code
DS.PAC

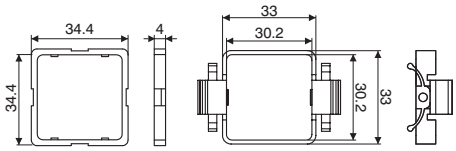

Fastening bracket

Ordering code
DS.BT6

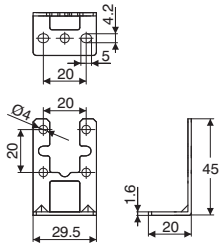

Panel mount adapter with screen protection

Ordering code
DS.PAD

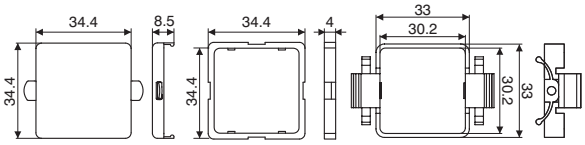

General

It is not unusual that, during some applications the thrust generated by a pneumatic cylinder is not sufficient for the specific purpose it has been designed for.
In order to get over the problem, the working pressure may be increased to a maximum line pressure which normally is 6 - 7 bar; alternatively the problem is solved by an higher bore cylinder that suits the machine.
Three size pressure boosters, with pressure ratio of 1 - 2, have been designed to avoid these problems. This device is utilizing the compressed air of the circuit where it is installed.

Caratteristiche costruttive e funzionali

The working method is based on the pump effect of the four chambers cylinder as shown in fig. 1. Two chambers are alternatively compressing the air in the boost one, while the fourth one is discharging.
By means of an internal circuit, the pressure booster keeps on pumping air till the down stream pressure reaches a value double the inlet pressure.
In these circumstances there is a balance condition.

When the down stream pressure decreases, the pressure booster starts again its alternating cycle till a new balance condition is restored.
The pressure booster can be furnished complete with pressure regulator installed on the inlet port for getting an accurate outlet pressure value. A wall mounting plate is also available.

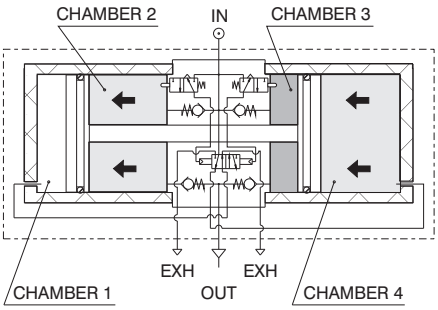

Instructions for installation and use

Do not exceed the suggested temperature and pressure values.
It is advisable to install a small air tank after the pressure booster to avoid pressure pulsation effects.
Discharge the down stream circuit before any maintenance operation as the inner circuit of the booster does not allow the down stream line discharge even if the inlet pressure drops down.

Maintenance

Pressure booster has an average life of about 20 millions of valve cycles, depending on working conditions (every back stroke corresponds to one valve cycles).
A proper lubrication and filtration of air improve the life of pressure booster parts.
It is advisable to protect the exhaust ports in environment.
Replaceable spare seal kits are available.

How to calculate the required time of pressure booster to increase the air pressure in a tank whose capacity is known.

Operating Data:
P1 = Inlet pressure
P2' = Tank initial pressure
P2" = Tank final pressure
V = Tank volume

PROCEDURE :
1) Calculate the ratio K' between the initial pressure of the tank and the inlet pressure of the booster (P2' / P1).
2) Calculate the ratio K" between the final pressure of the tank and the inlet pressure of the booster (P2" / P1).
3) Locate the intersection point between the ratio K' and the curve on filling time diagram related to the specific booster.
Trace a vertical line from the above point and read the correspondent time T' (the example shows the ratio K = 0.8 and correspondent time of about 4.8 seconds).

4) Repeat same procedure also for ratio K" to get time T".

5) Use the following formula $T = \frac{V}{5} \cdot (T''-T')$

to obtain the total time required to move the pressure P2' to P2" of tank volume V.

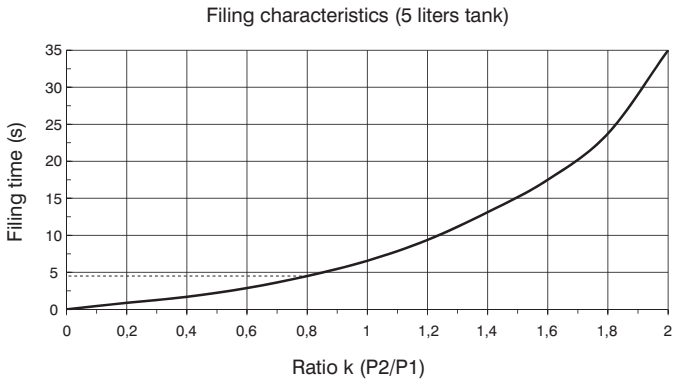

P1 = inlet pressure
P2 = tank pressure

Pressure booster ø40

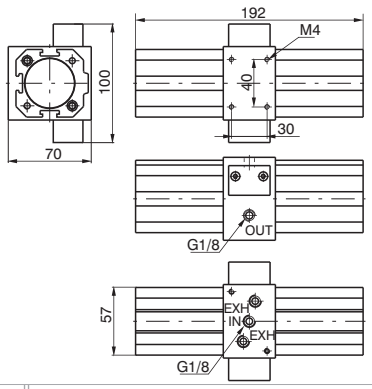

Ordering code

1740.50N

Flow rate curves

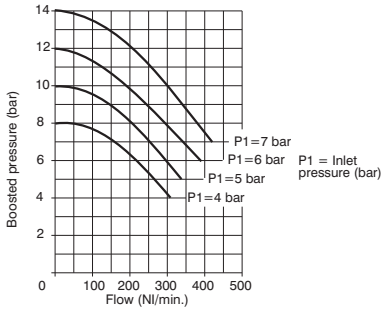

Filling curves

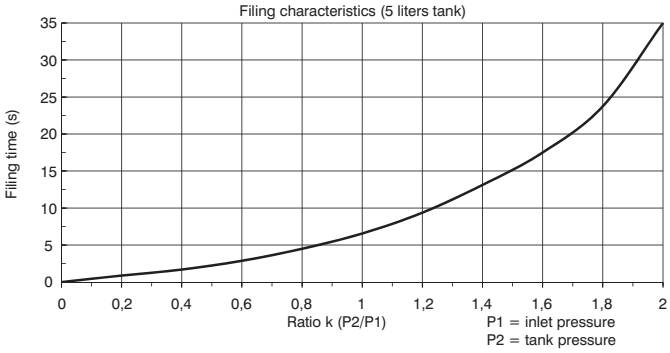

Operating Characteristics

- Self operating pressure booster with pressure ratio of 2:1.
- Automatic functioning: to operate the booster just connect it to compressed air line.
- Body made with light alloy.
- Barrel made of extruded and anodized aluminium.
- Downstream circuit pressure is kept under pressure even in absence of inlet pressure.

Technical characteristics

Connections	G 1/8"
Max working pressure (bar)	2 - 8
Temperature °C	50°C
Nominal orifice diameter	ø 5 mm
Weight	gr. 1500
Assembly position	Any
Max. fittings torque	15 Nm

Pressure booster ø40 complete with pressure regulator

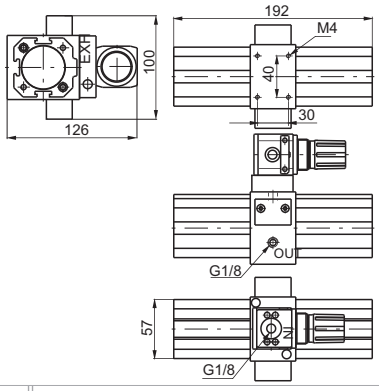

Ordering code

1740.50.NR

Flow rate curves

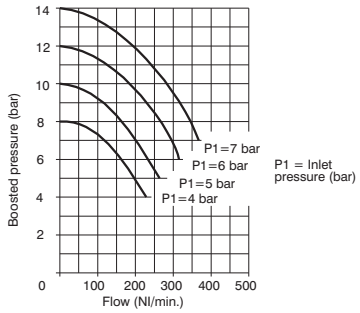

Filling curves

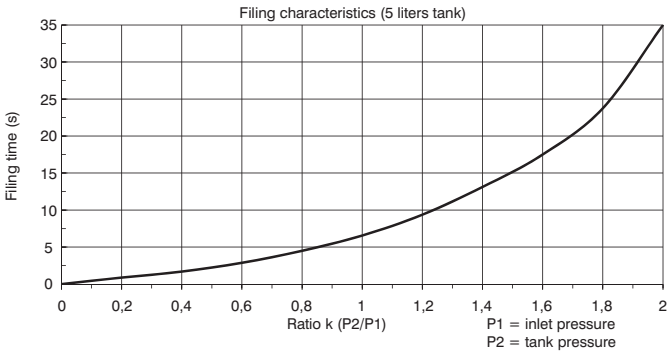

Operating Characteristics

- Self operating pressure booster with pressure ratio of 2:1.
- Automatic functioning: to operate the booster just connect it to compressed air line.
- Body made with light alloy.
- Barrel made of extruded and anodized aluminium.
- Downstream circuit pressure is kept under pressure even in absence of inlet pressure.
- Regulation of the inlet pressure (and as a consequence regulation of the outlet pressure)

Technical characteristics

Connections	G 1/8"
Max working pressure (bar)	2 - 8
Temperature °C	50°C
Nominal orifice diameter	ø 5 mm
Weight	gr. 1600
Assembly position	Any
Max. fittings torque	15 Nm

Pressure booster ø63

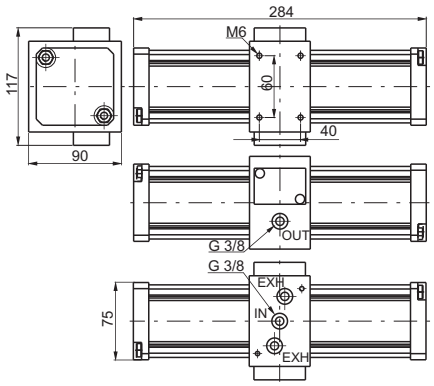

Ordering code

1763.80N

Flow rate curves

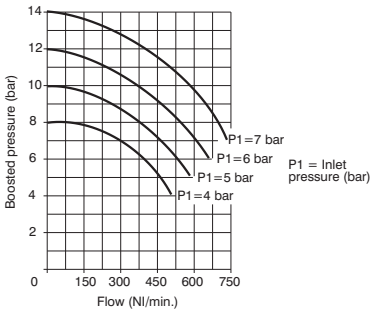

Filling curves

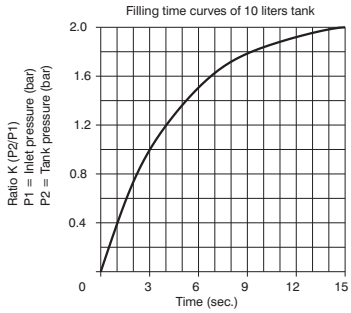

Operating Characteristics

- Self operating pressure booster with pressure ratio of 2:1.
- Automatic functioning: to operate the booster just connect it to compressed air line.
- Body made with light alloy.
- Barrel made of extruded and anodized aluminium.
- Downstream circuit pressure is kept under pressure even in absence of inlet pressure.

Technical characteristics

Connections	G 3/8"
Max working pressure (bar)	2 - 8
Temperature °C	50°C
Nominal orifice diameter	ø 7 mm
Weight	gr. 3000
Assembly position	Any
Max. fittings torque	15 Nm

Pressure booster ø63 complete with pressure regulator

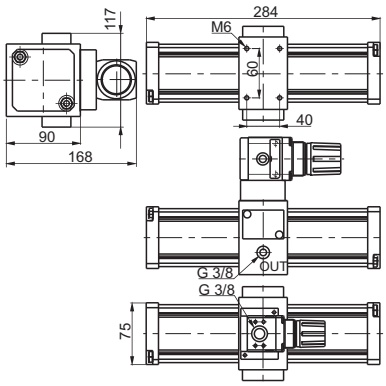

Ordering code

1763.80.NR

Flow rate curves

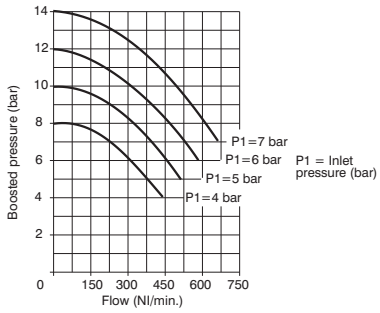

Filling curves

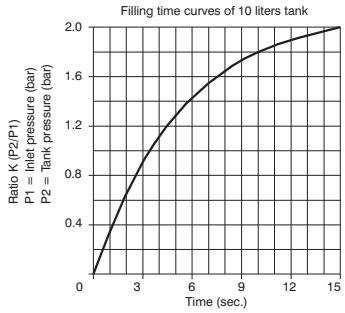

Operating Characteristics

- Self operating pressure booster with pressure ratio of 2:1.
- Automatic functioning: to operate the booster just connect it to compressed air line.
- Body made with light alloy.
- Barrel made of extruded and anodized aluminium.
- Downstream circuit pressure is kept under pressure even in absence of inlet pressure.
- Regulation of the inlet pressure (and as a consequence regulation of the outlet pressure)

Technical characteristics

Connections	G 3/8"
Max working pressure (bar)	2 - 8
Temperature °C	50°C
Nominal orifice diameter	ø 7 mm
Weight	gr. 3200
Assembly position	Any
Max. fittings torque	15 Nm

Pressure booster ø100

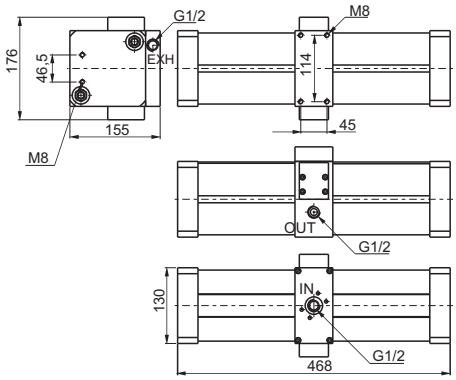

Ordering code

17100.125N

Flow rate curves

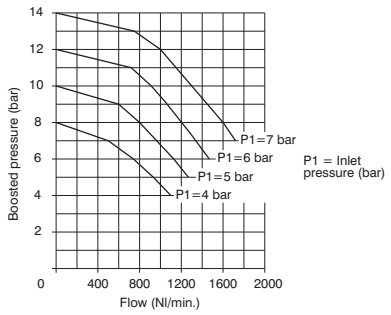

Filling curves

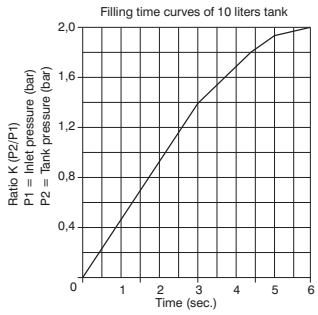

Operating Characteristics

- Self operating pressure booster with pressure ratio of 2:1.
- Automatic functioning: to operate the booster just connect it to compressed air line.
- Body made with light alloy.
- Barrel made of extruded and anodized aluminium.
- Downstream circuit pressure is kept under pressure even in absence of inlet pressure.

Technical characteristics

Connections	G 1/2"
Max working pressure (bar)	2 - 8
Temperature °C	50°C
Nominal orifice diameter	ø 12 mm
Weight	gr. 12000
Assembly position	Any
Max. fittings torque	40 Nm

Pressure booster ø100 complete with pressure regulator

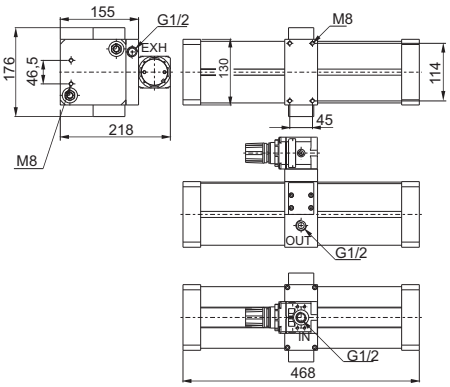

Ordering code

17100.125.NR

Flow rate curves

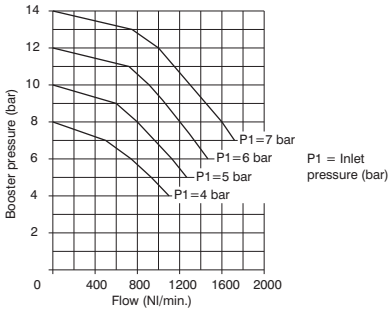

Filling curves

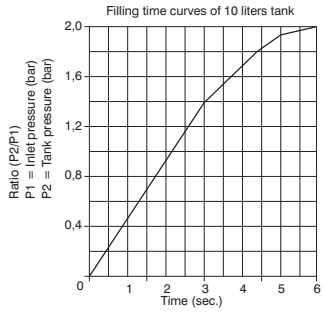

Operating Characteristics

- Self operating pressure booster with pressure ratio of 2:1.
- Automatic functioning: to operate the booster just connect it to compressed air line.
- Body made with light alloy.
- Barrel made of extruded and anodized aluminium.
- Downstream circuit pressure is kept under pressure even in absence of inlet pressure.
- Regulation of the inlet pressure (and as a consequence regulation of the outlet pressure)

Technical characteristics

Connections	G 1/2"
Max working pressure (bar)	2 - 8
Temperature °C	50°C
Nominal orifice diameter	ø 12 mm
Weight	gr. 12600
Assembly position	Any
Max. fittings torque	40 Nm

Base complete with pressure reducer

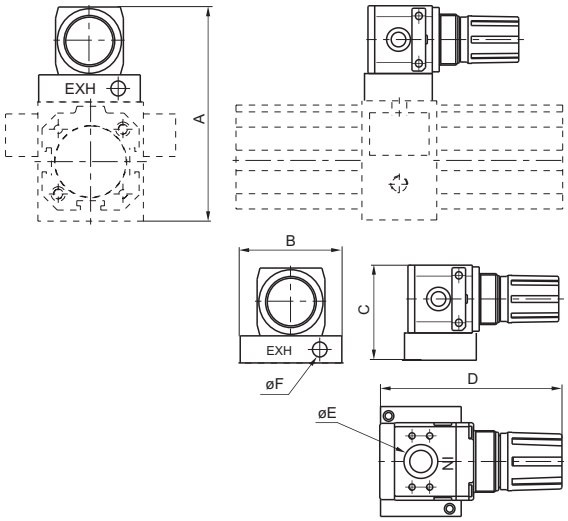

DIMENSIONS						
CODE	A	B	C	D	E	F
1740.BR	126	60	56	91	G1/8”	G1/8”
1763.BR	168	75	78	124	G3/8”	G3/8”

Ordering code

17Ⓥ.BR

Ⓥ	VERSION
	40 = Base complete with pressure reducer for Ø40 booster
	63 = Base complete with pressure reducer for Ø63 booster

ø100 = Mount directly the pressure reducer Code 17302B.C

3

Booster mounting plate

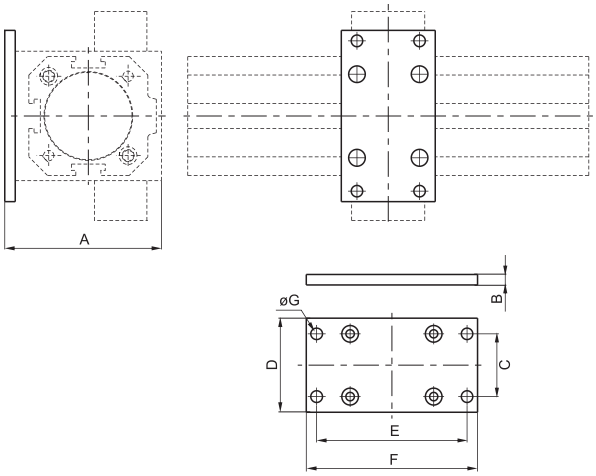

DIMENSIONS							
CODE	A	B	C	D	E	F	ØG
1740.02	75	5	30	45	72	82	5,5
1763.02	100	15	53	70	98	110	M8

Ordering code

17Ⓥ.02

Ⓥ	VERSION
	40 = Mounting plate for Ø40 booster
	63 = Mounting plate for Ø63 booster

ø100 = Use short foot bracket code 1320.50.05/1F

Basic Information

In some cases the force generated by a pneumatic actuator is not sufficient to carry out its required function. To overcome this problem it is then necessary, where possible, to either increase the working pressure or use a larger bore actuator providing it will fit within the structure of the machine.
If you cannot fit a larger actuator, the solution is to use a pressure booster to increase the air pressure to that portion of the pneumatic circuit. The booster operates using the same compressed air used by the pneumatic system and does not require an external power supply. It is easy to install and can increase the working pressure in any part of the system where ever its needed, maintaining the normal working pressure in the rest of the system.
The new pressure booster **P+** is lightweight with a new compact and linear design, **P+** has an integrated pressure regulator that adjusts the setting of the output pressure P2 which is also fitted with a pressure relief valve. The design of the internal circuit provides high flow rates and fast filling times whilst the two G1/8" manometer connections built into the body of the booster allow monitoring of the input and output pressures.

Operation

The operating principle of the device is based on a four chamber pump in which with a reciprocating movement, two chambers compress the air in the compression chamber whilst the fourth chamber is in the discharge phase. The incoming air passes through the non-return valves and supplies the compression chambers "A" and "B" at the same time.
Meanwhile, the integrated pressure regulator feeds the thrust chamber "C" via the oscillating valve which in turn compresses the air in compression chamber "B", the air is then pushed through the non-return valve and exits through the outlet connection.
When the piston reaches the end of stroke the oscillating valve changes over and feeds chamber "D" putting chamber "C" into the discharge position, thus reversing the piston and compressing the air in compression chamber "A", pushing it through the non-return valve and out through the outlet connection.
The oscillating motion of the piston allows the pressure booster to pump intensified air into the downstream circuit until the chambers reach a state of equilibrium; this in turn stops the booster.
When the downstream pressure decays the booster restarts oscillating until the state of equilibrium is re-established.

3

Pneumatic Circuit

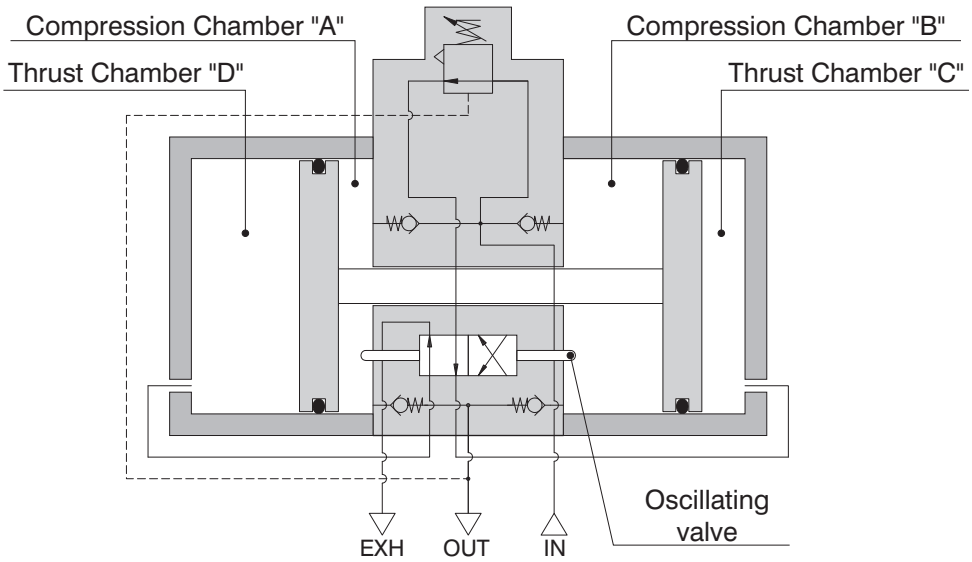

The **P+** pressure booster, is certified by ATEX:

CE Ex II 3GD c T6 T85°C X 5°C≤Ta≤50°C.

General Warning

It is recommended you follow the instructions below in order to prevent personal injury or damage to the booster.

- The pressure booster is supplied as standard with the regulating spring completely unwand. in this condition it is possible to detect a leak of air from below the regulating knob or through the exhaust port. this conditions is standard for the unit. When the spring is completely unwand the downstream pressure and the inlet pressure are the same. in order to increase the downstream pressure it is necessary to operate th regulation knob increasing the sping compression.
- Please apply the necessary safety measures to ensure that the booster only operates within the specified pressure range. Exceeding the maximum output pressure is dangerous.
- The Booster is fitted with a non-return valve on the output which prevents discharge of the downstream pressure, It is recommended that a 3/2 valve be installed in the OUT connection if it is necessary to rapidly discharge the downstream pressure.
- When the booster is not in use it is recommended that the inlet pressure is removed to let the booster stop, thus avoiding unexpected operation or malfunction.
- If there is not downstream air consumption it is possible to register a leak through the exhaust port of the unit. this condition is normal and is the conseguence of the internal designed aimed at discharging any pressure building up in the unit in the rest condition.

Use and maintenance

The pressure booster must always be used in accordance with the operating parameters and instruction; any improper use may cause injury or malfunction. The pressure booster is not an alternative to a compressor because continuous uninterrupted operation will greatly reduce the life of the unit.

- The operating life of the device depends mainly on the operational duty cycle. Prolonged uninterrupted use without pause may reduce the operating life of the booster.
- Ensure the unit is supplied with a suitable compressed air supply, please note: appropriate filtration and lubrication may help to increase the durability of the product.
- **The input flow value must be equal or greater than double the output flow value (Q1/Q2>2).**
- **Ensure that the value of the output pressure is at least 1bar higher than the input pressure (P2>P1+1).**
- To avoid pulsation of the output pressure during operation, it is recommended that an accumulation tank (reservoir) is installed in the downstream circuit.
- Protect the booster exhaust ports from the ingress of dust or debris.
- To reduce the noise generated by the unit, install silencers into the exhaust ports.
- Pressure booster has an average life of about 20 millions of valve cycles, depending on working conditions (every back stroke corresponds to one valve cycles).

Regolazione della pressione

The booster is fitted with an internal pressure regulator which allows regulation of the output pressure P2 and is also fitted with pressure relief valve. For correct operation of the booster, please consider the following instructions:

- Air leaking from under the adjusting knob when the spring is decompressed is not a defect but a sign that the device is working correctly.
- In order to increase the regulated pressure, pull the knob upwards to unlock, then rotate the knob in the direction indicated by the arrow (+).
- To lock the knob after the adjustment has been made, push the knob downwards until it detents in the locked position.
- To reduce the output pressure, pull the knob upwards, rotate the knob indicated by the arrow (-), the built in pressure relief valve will discharge the excess pressure from under the adjusting knob.
- Always regulate the rising pressure.

Method of calculation of the time necessary to increase the pressure in a tank of a given volume using a pressure booster.

DATA:
P1 = Inlet pressure
P2' = Initial tank pressure
P2" = Final tank pressure
V = Tank volume

PROCEDURE:

1) Calculate the K' ratio between the initial tank pressure and the inlet booster pressure (P2'/ P1).
2) Calculate the K" ratio between the final tank pressure and the inlet booster pressure (P2"/ P1).
3) Locate, on the chart illustrating, the booster filling time, the intersection point between the K' ratio and the curve, then trace a vertical line from the intersection point to the vertical axis and read the correspondent value T' (in the example chart, to a ratio of 0.8 corresponds a time value of about 3.6 seconds).
4) Repeat the operation for the K'' ratio, obtaining the T" time.

5) Apply the formula $T = \frac{V}{5} \cdot (T'' - T')$
to obtain the total time needed to take the tank of volume V from the pressure value P2' to the pressure value P2'.

Example of calculation of the necessary time to take a 10L tank from the pressure value P2' to the value P2"

K' = 0,8 T' = 3,6 sec. V = 5L.
K" = 1,5 T" = 12 sec.

$T = \frac{5}{5} \cdot (12-3,6) = 8,4$ sec.

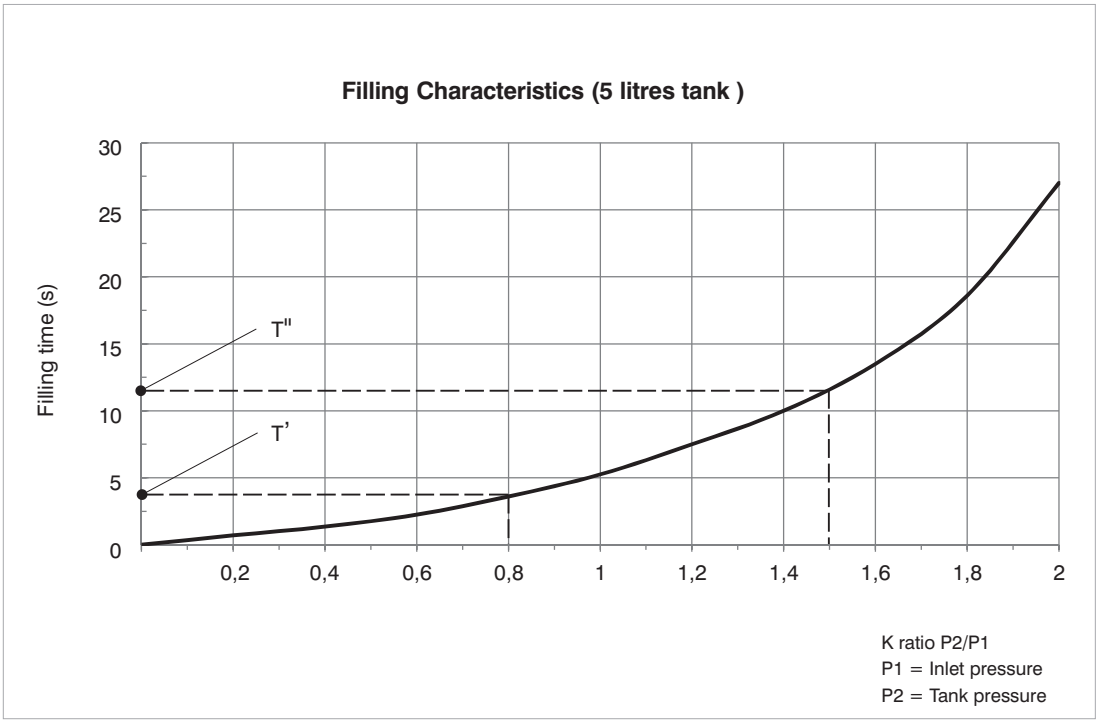

Pressure booster in Technopolymer Ø40

ATEX CE Ex II 3GD

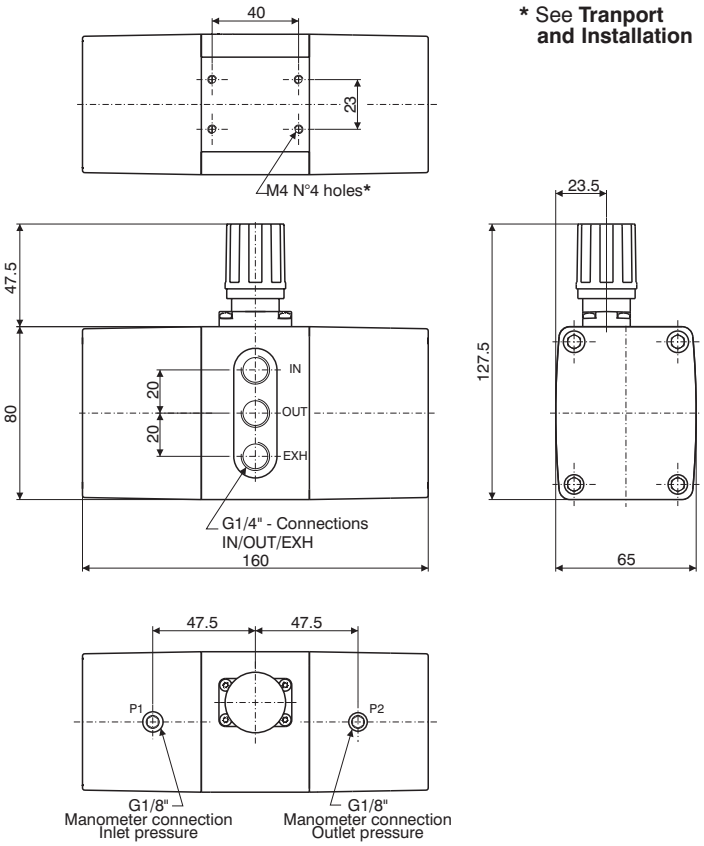

* See **Tranport and Installation**

Ordering code

MDPT40.2R.◉

	MANOMETER OPTIONS
◉	Without options = Standard without manometer
	A = Manometer P1 0-12 bar Manometer P2 0-20 bar
	B = Manometer P1 0-12 bar Manometer P2 0-16 bar
	C = Manometer P1 0-12 bar Manometer P2 0-12 bar

3

Operational characteristics

- Pressure Booster with max. 2:1 Compression ratio
- Automatic operation for use with compressed air only
- Maintains downstream air when the supply pressure fails (Providing the circuit has no leakage)
- Integrated regulator for output pressure control, with overpressure relief valve
- IN,OUT and EXH connections – G1/4” on the same side
- Manometer connections G1/8” to monitor and control the input and output pressures
- Body and cover in technopolymer
- Connections in technopolymer

Technical characteristics

Connections (IN / OUT / EXT)	G1/4"
Manometer connections P1/P2	G1/8"
Working pressure (bar) [Min. - Max.]	2,5 ÷ 10
Working temperature (°C) [Min. - Max.]	-5 ÷ + 50
Moltiplication ratio max.	2 : 1
Assembly position	Any
Pressure regulation	Manual with relieving
Weight	905 gr.
Max. fittings torque	G1/8 = 4 N/m G1/4 = 9 N/m

Characteristics curves

Flow rate characteristics

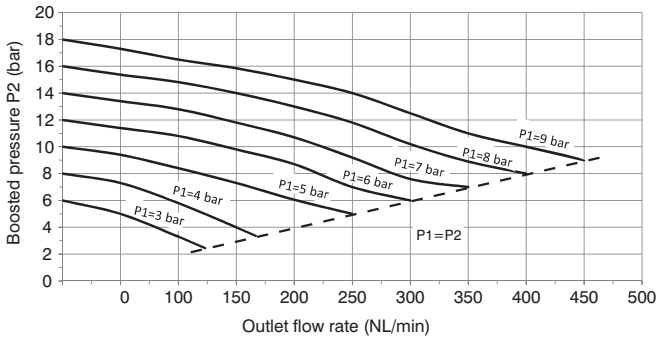

Filling characteristics (5 liters tank)

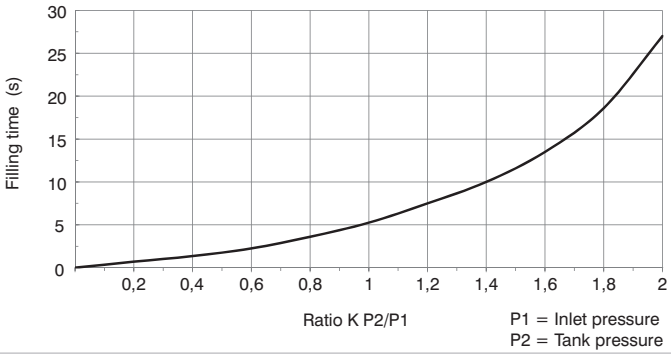

Transport and Installation:

The installation and implementation of the device must be done by skilled personnel. Respecting the safety requirements specified in the UNI norm **UNI EN 983-97 Machinery Safety – Safety Requirements concerning oleo-hydraulic and pneumatic systems** and their components.

The following instructions are essential for a correct installation:

- Do not use the green knob to lift and transport the device, because it could rip off causing injuries or damaging objects..
- Install the booster by fixing it through the threaded M4 holes on the body of the machine or using the special accessories (see the "Accessories" chapter).

Direct Wall Fixing

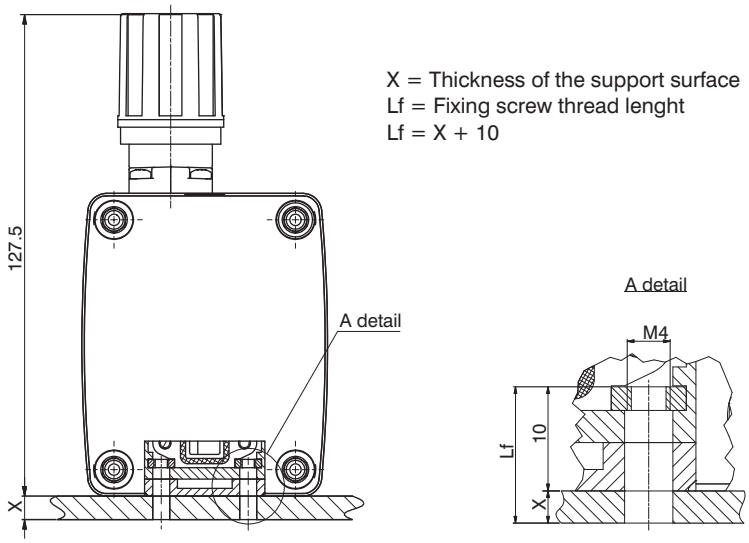

Fixing with a steel plate fixing clamp.

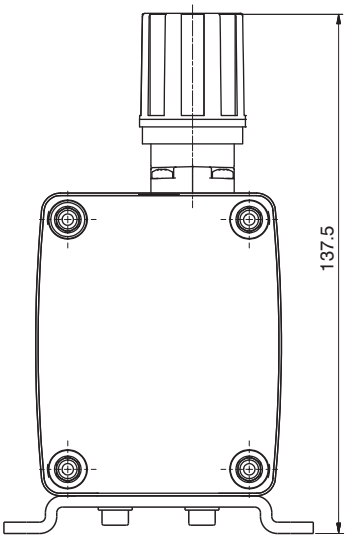

Bracket

Ordering code
T1740.01

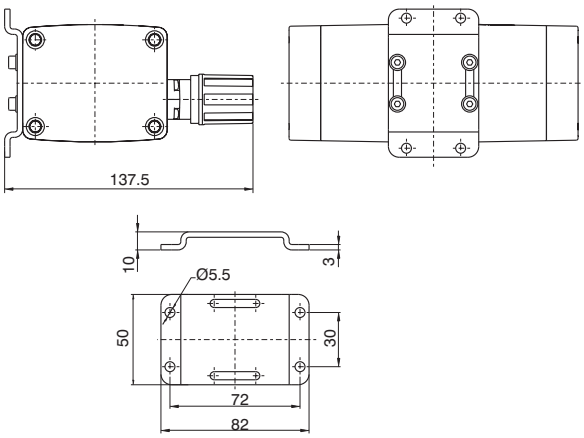

Weight gr. 94,5
Complete with booster fixing screws

Manometer D.40

Ordering code
17070A.Ⓢ

	SCALE
Ⓢ	A = 0-4 bar
	B = 0-6 bar
	C = 0-12 bar
	D = 0-16 bar
	E = 0-20 bar

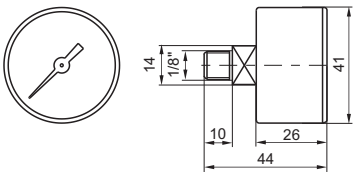

Weight gr. 85

General

The operational safety and durability of a pneumatic circuit depends on the quality of the compressed air. The compressed air and the moisture increase the rate of wear of the surfaces and seals, reducing the efficiency and the life of the pneumatic components. Furthermore the pressure fluctuation due to a discontinuous demand of air, adversely effect the correct operation of the circuit. To eliminate these disadvantages it is essential to install the service unit: filter, presure regulator and lubricator.

Construction and working characteristics

The new FRL units AIRPLUS series represents the evolution of the well known and consolidated 1700 series.
The main features are increased performances, reliability, easy and fast assembly and the introduction of the latest technical features.
With the exception of the air intake module and the pressure switch module all elements are available in two configurations: with technopolimer connections (IN and OUT) , (T series), or with metal threaded inserts , (N series).
Bowls made of transparent polycarbonate (PC) are fitted with a bowl protection guard which is assembled on the body via a quick coupling mechanism provided with a safety button. The filter, available with three filtration grades (5μm, 20μm and 50μm) is fitted as standard with a drain mechanism which can be operated manually or semi-automatically. The regulator is based on the rolling diaphragm technology with low hysteresis and the system is balanced. The unit can be fitted with integrated flush mounting pressure gauge (0 to 12 bar range).
4 pressure ranges are available going from 0 to 12 bar and the regulating knob can be blocked in position simply by pressing it down. A dedicated version is available for battery mounting , up to a maximum of 6 units. The lubricator is based on the Venturi principle and the oil quantity is regulated via the adjusting screw positioned don the transparent polycarbonate (PC) regulating dome which also ensure clear visibility of the oil flow and regulation. The oil suction pipe is fitted as standard with a sintered filter which ensures that any contaminant that should be present in the oil will reach the down stream circuit. Shoot off valve is available in two versions, one manually operated and one solenoid operated. In both cases the unit is fitted with a threaded connection for depressurising the downstream circuit. On the manually operated version, in the lock position, it is possible to fit up to three locks in order to prevent the accidental pressurization of the pneumatic circuit avoiding accidents or damages.
The solenoid operated version is available with a 15mm or with a 22mm solenoid valve. The soft start valve ensure a progressive pressurization of the down stream circuit avoiding sudden pressure surges which could be dangerous for the devices fitted on the down stream circuit. The filling time can be easily adjusted via a built in flow regulator. The full flow rate is allowed only once the down stream pressure has reached 50% of the value of the inlet pressure. The pressure switch module which can be set between 2 and 10 bar and the air intake module complete the range. The elements are joint together via dedicated quick coupling technopolimer flanges which allows for the units to be panel mounted moreover ensure the possibility to replace any component without disassembling the FRL group from its position.
90° mounting brackets and standard gauges are also available.

Instruction for installation and operation

The FRL unit must be installed as close as possible to the application.
The air flow direction must follow the directions indicated on the single units in correspondence of the threaded connections.(IN and OUT)
Units provided with bowl must be mounted vertically with the bawl facing down. Single units or groups can be panel mounted via the Y type flanges, regulators and filter-regulators can be mounted via the 90° zinc plated steel bracket. In order to mount the 90° bracket it is necessary to remove the regulating knob and then the locking ring before positioning the bracket. All units must be operated according to the specified pressure and temperature ranges; fittings must be mounted without exciding the maximum torque allowed. Ensure that the units cover plates are in position before pressure is applied. The cover plates are needed to lock in position the top part of the unit. The condense level in filer and filter-regulators bowls must never exceed the maximum level indicated on the bowls. With manual or semi automatic drain the condense can be discharged via a 6/4mm tube directly connected to the drain tap. On the pressure regulator the pressure value must always set wile pressure is rising and ideally the unit pressure range should be chosen based on the pressure value to be regulated. Lubricators must be filled with class FD22 and HG32 oils. Ensure, both on the inlet and on the outlet , that the flow rate is above the minimum flow rate required to operate the unit. Below this value the units does not operate.
The oil quantity can be regulated via the regulating screw on the transparent polycarbonate dome through which it is also clearly visible the oil flow. A drop every 300-600 litres should be allowed. The oil refill can take place only with the bowl not under pressure.This size does not have the dedicated oil re-fill plug.
The manual shot off valve needs, to be operated, a push and turn action (clockwise) in order to close it and discharge the down stream circuit it is necessary to turn anti clock wise the knob. The soft start valve is used to slowly and progressively pressurize the down stream circuit, the time needed to do so can be set by means of the built in flow regulator. The soft start valve on its own does not allow for the down stream circuit to be discharged, in order to do so it is necessary to combine it with a shot off valve (to be mounted upstream).

Maintenance

For any maintenance which requires the removal of the top plugs/ supports from the body it is necessary to preventively remove the sides cover plates. If the top plugs\supports are removed with the sides plates still in their position the unit could be permanently damaged.

Bowls , plugs and supports are assembled with a bayonet type mechanism. In order to remove them rotate anti clockwise until the mechanical stop is reached and than remove from the body (for the bowls firstly press down the green safety button).
Bowls and transparent parts can be cleaned with water and neutral soap. Do not use solvents or alcohol.
Filtering elements (from filters and filter regulators) made of HDPE can be regenerated by washing and blowing them. In order to remove them it is necessary to remove the bowl unscrew the filter element and replace it with a new one or clean it.
The oil refill process can take place only if the bowl in not pressurized. The oil refill plug is not available on this size.
Should the pressure regulator not perform properly or should present a constant leackage from the relieving replaced the diaphragm by unloading completely the regulating spring before removing the regulation support.
Any other maintenance operation, in consideration of the complexity of the assembly, and the need of a through test according to the Pneumax spa specification, should be carried out by the manufacturer.

Fittings maximum recommended torque applicable

THREAD	Technopolymer version (T)	Metal version (N)
G1/8”	4 Nm	15 Nm
G1/4”	9 Nm	20 Nm
G3/8”	16 Nm	25 Nm
G1/2”	22 Nm	30 Nm

Filter (F)

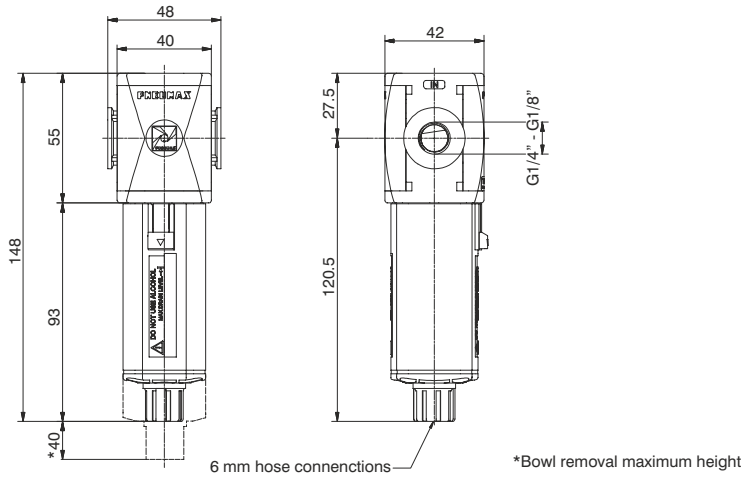

Example: T171BFB : size 1, Filter with Technopolymer threads, G1/4" connections, 20 μm filter pore size

Flow rate curves

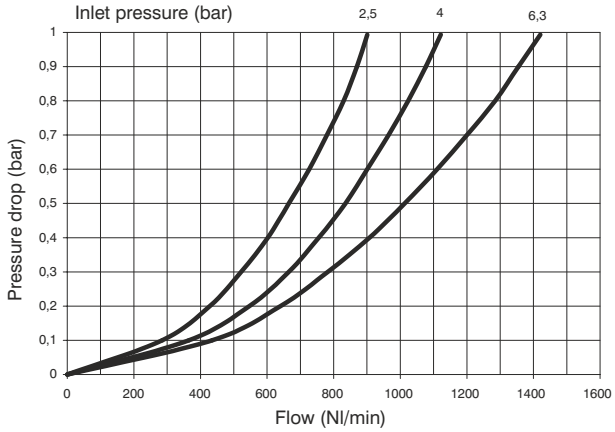

Operational characteristics

- Double filtering action: air flow centrifugation and filter element
- Filtering element made of HDPE (high density polyethylene) available in three different filtration grades (5μm, 20μm and 50μm) can be regenerated by washing it or replaced.
- Transparent bowl made off polycarbonate with bowl protection guard.
- Bowl assembly via bayonet type quick coupling mechanism with safety button.
- Semi-automatic drain mounted as standard; automatic drain upon request

Note

In order to ensure adequate flow on the auto drain version it is recommended to use minimum a 6mm fitting.

Technical characteristics

Connections	G 1/8" - G 1/4"
Max. inlet pressure	13 bar
Minimum working pressure with automatic drain	0,5 bar
Maximum working pressure with automatic drain	10 bar
Working temperature	-5°C +50°C
Weight with Technopolymer threads	gr. 120
Weight with threaded inserts	gr. 130
Filter pore size	5 μm - 20 μm - 50 μm
Bowl capacity	18 cm^3
Assembly positions	Vertical
Max. fitting torque (with Technopolymer threads)	G1/4" = 9 Nm
Max. fitting torque (with threaded inserts)	G1/8" = 15 Nm G1/4" = 20 Nm

Ordering code

Ⓥ171ⒸFⓈⓄⓏ

Ⓥ	VERSION
	N = Metal inserts
	T = Technopolymer thread
Ⓒ	CONNECTIONS
	A = G1/8"(only for "N" version)
	B = G1/4"
	C = 1/4 NPT(only for "N" version)
Ⓢ	FILTER PORE SIZE
	A = 5 μm
	B = 20 μm
	C = 50 μm
Ⓞ	OPTIONS
	= Standard *
	S = Automatic drain
Ⓩ	BOWL OPTIONS
	= Standard *
	N = Nylon bowl

* no additional letter required

Coalescing filter (D)

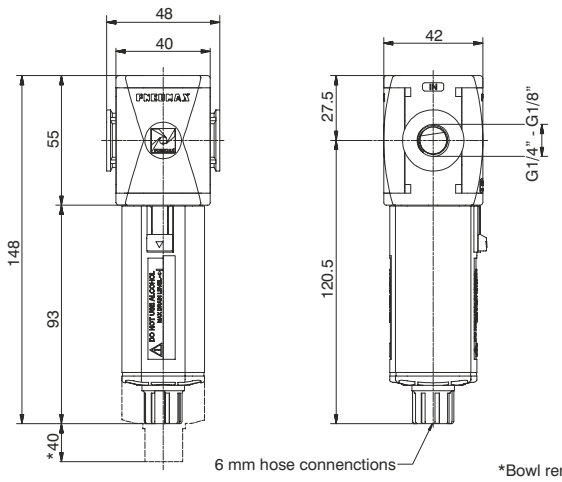

Example : T171BDA : Coalescing size 1, Filter with Technopolymer threads, G1/4" connections, filter efficency 99,97%

Flow rate curves

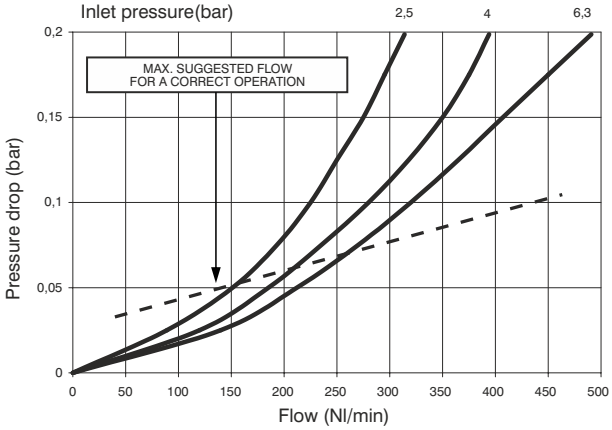

Operational characteristics	Technical characteristics		
- Coelesing filter element with filtration grade of 0.01μm	Connections	G 1/8" - G 1/4"	
- Transparent bowl made off polycarbonate with bowl protection guard.	Max. inlet pressure	13 bar	
- Bowl assembly via bayonet type quick coupling mechanism with safety button.	Minimum working pressure with automatic drain	0,5 bar	
- Semi-automatic drain mounted as standard; automatic drain upon request	Maximum working pressure with automatic drain	10 bar	
	Working temperature	-5°C +50°C	
Note	Weight with Technopolymer threads	gr. 125	
In order to ensure a better grade of filtration it is recommended to use a 5 μm filter before the coalescing filter. In order to ensure adequate flow on the auto drain version it is recommended to use minimum a 6mm fitting.	Weight with threaded inserts	gr. 135	
	Filter efficiency with 0,01 μm particle	99,97%	
	Bowl capacity	18cm^3	
	Assembly positions	Vertical	
	Max. fitting torque (with Technopolymer threads)	G1/4" = 9 Nm	
	Max. fitting torque (with threaded inserts)	G1/8" = 15 Nm G1/4" = 20 Nm	

Ordering code

Ⓥ171ⒸDⒺⓄⓏ

Ⓥ	VERSION
	N = Metal inserts
	T = Technopolymer thread
Ⓒ	CONNECTIONS
	A = G1/8"(only for "N" version)
	B = G1/4"
	C = 1/4 NPT(only for "N" version)
Ⓔ	FILTER EFFICIENCY
	A = 99,97%
Ⓞ	OPTIONS
	= Standard *
	S = Automatic drain
Ⓩ	BOWL OPTIONS
	= Standard *
	N = Nylon bowl

* no additional letter required

Regulator (R)

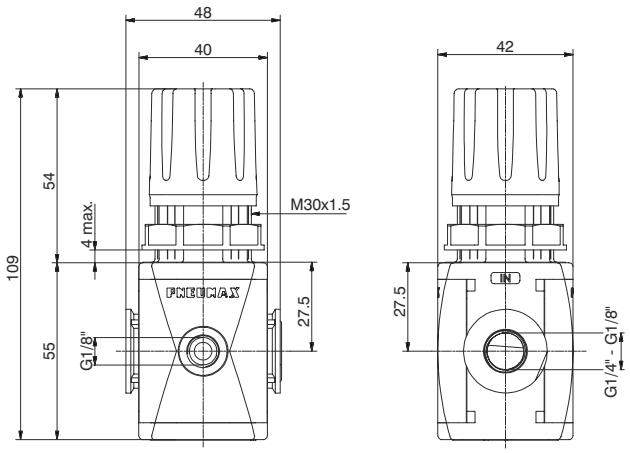

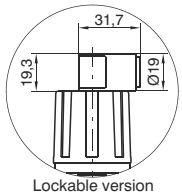

Lockable version
Detail

Example: T171BRC : size 1, Regulator with Technopolymer threads, G1/4" connections, 0 to 8 bar adjusting range

Flow rate curves

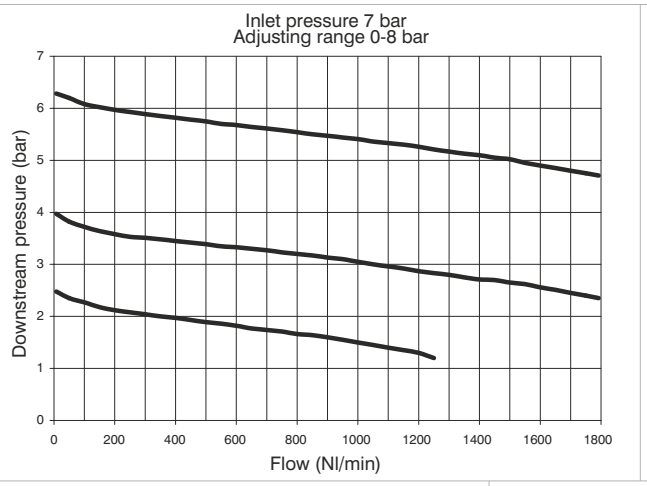

Adjustment characteristics

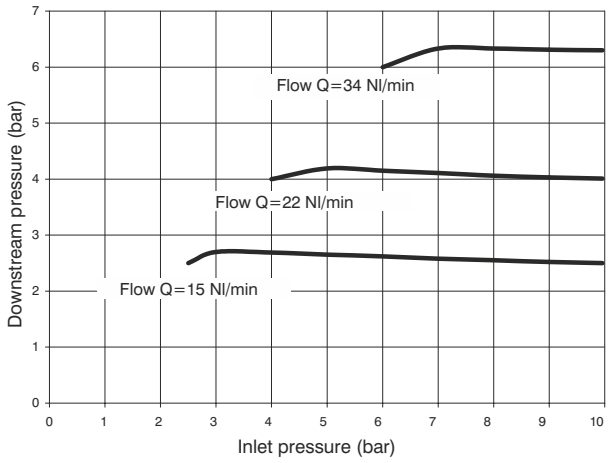

Operational characteristics

- Diaphragm pressure regulator with relieving.
- Low hysteresis rolling diaphragm.
- Balanced system.
- Available in four pressure ranges up to 12 bar.
- Operating knob can be locked in position by pressing it down once the desired P2 (regulated pressure) pressure value is achieved.
- Fitted with panel mounting locking ring.

Note

The pressure must be always regulating while increasing. For a more precise regulation and higher sensibility, the use of a regulator with a pressure range as close as possible to the regulated pressure is recommended.

Technical characteristics

Connections	G 1/8” - G 1/4”
Max. inlet pressure	13 bar
Working temperature	-5°C +50°C
Pressure gauge connections	G 1/8”
Weight with Technopolymer threads	gr. 130
Weight with threaded inserts	gr. 140
Pressure range	0-2 bar / 0-4 bar 0-8 bar / 0-12 bar
Assembly positions	Indifferent
Max. fitting torque (with Technopolymer threads)	G1/8" = 4 Nm G1/4" = 9 Nm
Max. fitting torque (with threaded inserts)	G1/8" = 15 Nm G1/4" = 20 Nm

Ordering code

Ⓥ171ⒸⒼ⒯⓪

Ⓥ	VERSION
	N = Metal inserts
	T = Technopolymer thread
Ⓒ	CONNECTIONS
	A = G1/8"(only for "N" version)
	B = G1/4"
	C = 1/4 NPT(only for "N" version)
Ⓖ	ADJUSTING RANGE
	A = 0-2 bar
	B = 0-4 bar
	C = 0-8 bar
	D = 0-12 bar
Ⓣ	TYPE
	= Standard *
	F = Controlled refiel + improved relieving
	L = no relieving
	R = Improved relieving
⓪	OPTIONS
	= Standard *
	K = Lockable version

* no additional letter required

Regulator including gauge (RM)(RW)

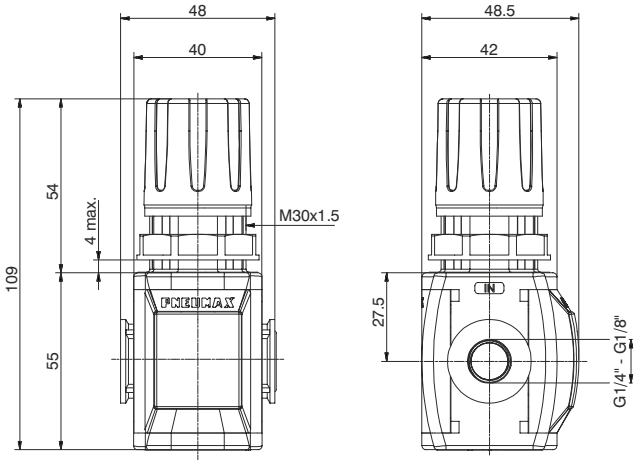

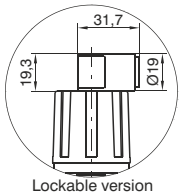

Lockable version
Detail

Example : T171BRMC : size 1, Regulator including gauge with Technopolymer threads, G1/4" connections, 0 to 8 bar adjusting range

Flow rate curves

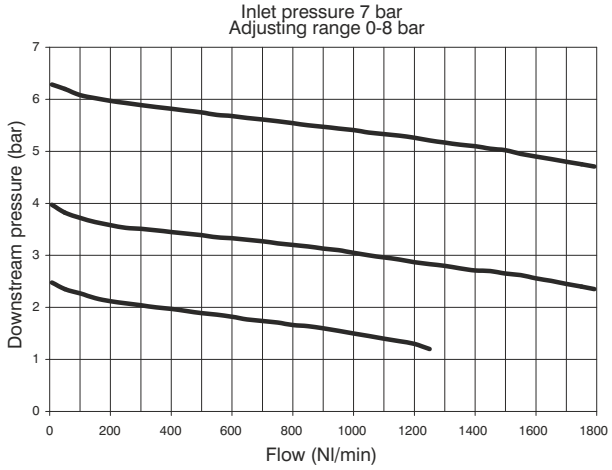

Adjustment characteristics

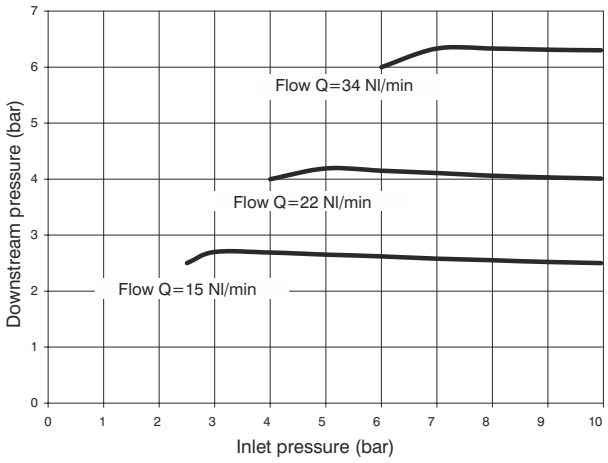

Operational characteristics

- Diaphragm pressure regulator with relieving.
- Low hysteresis rolling diaphragm.
- Balanced system.
- Available in four pressure ranges up to 12 bar.
- Operating knob can be locked in position by pressing it down once the desired P2 (regulated pressure) pressure value is achieved.
- Fitted with panel mounting locking ring.
- Integrated manometer 0-12 bar as standard (for 0-8 and 0-12 bar range) and 0-4 bar (for 0-2 and 0-4 range)

Note

The pressure must be always regulating while increasing. For a more precise regulation and higher sensibility, the use of a regulator with a pressure range as close as possible to the regulated pressure is recommended.

Technical characteristics

Connections	G 1/8" - G 1/4"
Max. inlet pressure	13 bar
Working temperature	-5°C +50°C
Weight with Technopolymer threads	gr. 140
Weight with threaded inserts	gr. 150
Pressure range	0-2 bar / 0-4 bar 0-8 bar / 0-12 bar
Assembly positions	Indifferent
Max. fitting torque (with Technopolymer threads)	G1/4" = 9 Nm
Max. fitting torque (with threaded inserts)	G1/8" = 15 Nm G1/4" = 20 Nm

Ordering code

Ⓥ171ⒸRⒹⒼ⒯⓪

Ⓥ	VERSION
	N = Metal inserts
	T = Technopolymer thread
Ⓒ	CONNECTIONS
	A = G1/8" (only for "N" version)
	B = G1/4"
	C = 1/4 NPT (only for "N" version)
Ⓓ	FLOW DIRECTION
	M = from left to right
	W = from right to left
Ⓖ	ADJUSTING RANGE
	A = 0-2 bar
	B = 0-4 bar
	C = 0-8 bar
	D = 0-12 bar
Ⓣ	TYPE
	= Standard *
	F = Controlled refiel + improved relieving
	L = no relieving
	R = Improved relieving
⓪	OPTIONS
	= Standard *
	K = Lockable version

* no additional letter required

Modular pressure regulator (B)

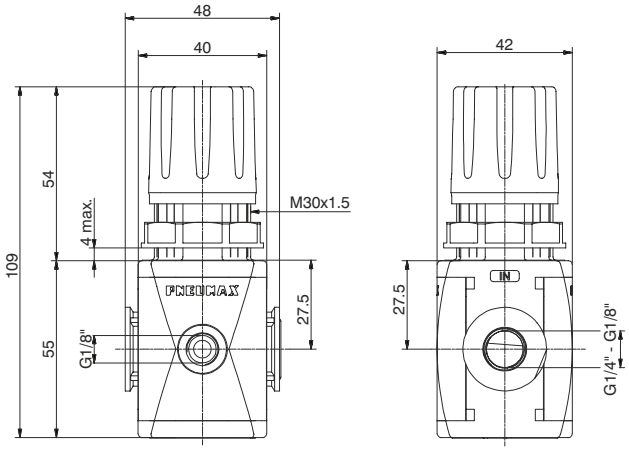

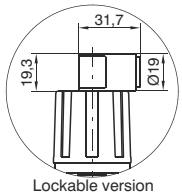

Lockable version
Detail

Example: T171BBC : size 1, Regulator with Technopolymer threads, G1/4" connections, 0 to 8 bar adjusting range

Flow rate curves

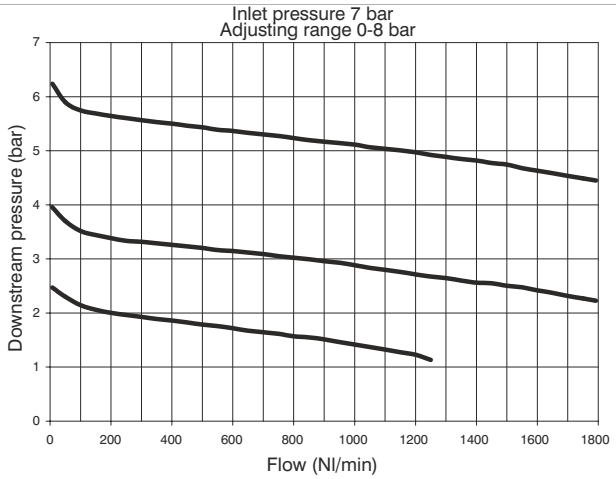

Operational characteristics

- Diaphragm pressure regulator with relieving.
- Low hysteresis rolling diaphragm.
- Balanced system.
- Available in four pressure ranges up to 12 bar.
- Operating knob can be locked in position by pressing it down once the desired P2 (regulated pressure) pressure value is achieved.
- G1/8" output front connection.
- Air supply can be applied by both directions.

Note

The pressure must be always regulating while increasing. For a more precise regulation and higher sensibility, the use of a regulator with a pressure range as close as possible to the regulated pressure is recommended.

Technical characteristics

Connections	G 1/8" - G 1/4"
Max. inlet pressure	13 bar
Working temperature	-5°C +50°C
Pressure gauge connections	G 1/8"
Weight with Technopolymer threads	gr. 130
Weight with threaded inserts	gr. 140
Pressure range	0-2 bar / 0-4 bar 0-8 bar / 0-12 bar
Assembly positions	Indifferent
Max. fitting torque (with Technopolymer threads)	G1/8" = 4 Nm G1/4" = 9 Nm
Max. fitting torque (with threaded inserts)	G1/8" = 15 Nm G1/4" = 20 Nm

Ordering code

Ⓥ171ⒸⒷⒼ⒯⒪

Ⓥ	VERSION
	N = Metal inserts
	T = Technopolymer thread
Ⓒ	CONNECTIONS
	A = G1/8" (only for "N" version)
	B = G1/4"
	C = 1/4 NPT (only for "N" version)
Ⓖ	ADJUSTING RANGE
	A = 0-2 bar
	B = 0-4 bar
	C = 0-8 bar
	D = 0-12 bar
Ⓣ	TYPE
	= Standard *
	F = Controlled refiel + improved relieving
	L = no relieving
	R = Improved relieving
Ⓞ	OPTIONS
	= Standard *
	K = Lockable version

* no additional letter required

Modular pressure regulator including manometer (M)

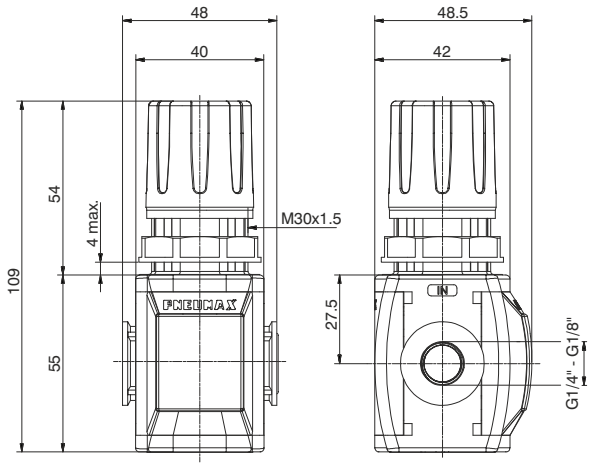

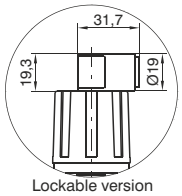

Lockable version
Detail

Example : T171BMC : size 1, Regulator including gauge with Technopolymer threads, G1/4" connections, 0 to 8 bar adjusting range

Flow rate curves

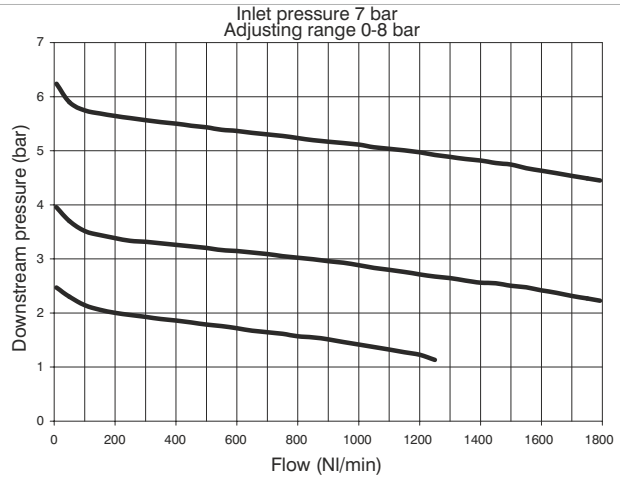

Operational characteristics

- Diaphragm pressure regulator with relieving.
- Low hysteresis rolling diaphragm.
- Balanced system.
- Available in four pressure ranges up to 12 bar.
- Operating knob can be locked in position by pressing it down once the desired P2 (regulated pressure) pressure value is achieved.
- G 1/8" output connection positioned on the opposite side of the built in gauge.
- Air supply can be applied by both directions.
- Integrated manometer 0-12 bar as standard (for 0-8 and 0-12 bar range) and 0-4 bar (for 0-2 and 0-4 range)

Note

The pressure must be always regulating while increasing. For a more precise regulation and higher sensibility, the use of a regulator with a pressure range as close as possible to the regulated pressure is recommended.

Technical characteristics

Connections	G 1/8" - G 1/4"
Max. inlet pressure	13 bar
Working temperature	-5°C +50°C
Weight with Technopolymer threads	gr. 140
Weight with threaded inserts	gr. 150
Pressure range	0-2 bar / 0-4 bar 0-8 bar / 0-12 bar
Assembly positions	Indifferent
Max. fitting torque (with Technopolymer threads)	G1/8" = 4 Nm G1/4" = 9 Nm
Max. fitting torque (with threaded inserts)	G1/8" = 15 Nm G1/4" = 20 Nm

Ordering code

Ⓥ171ⒸMⒼ⒯Ⓞ

Ⓥ	VERSION
	N = Metal inserts
	T = Technopolymer thread
Ⓒ	CONNECTIONS
	A = G1/8" (only for "N" version)
	B = G1/4"
	C = 1/4 NPT (only for "N" version)
Ⓖ	ADJUSTING RANGE
	A = 0-2 bar
	B = 0-4 bar
	C = 0-8 bar
	D = 0-12 bar
Ⓣ	TYPE
	= Standard *
	F = Controlled refiel + improved relieving
	L = no relieving
	R = Improved relieving
Ⓞ	OPTIONS
	= Standard *
	K = Lockable version

* no additional letter required

Manifold pressure regulators

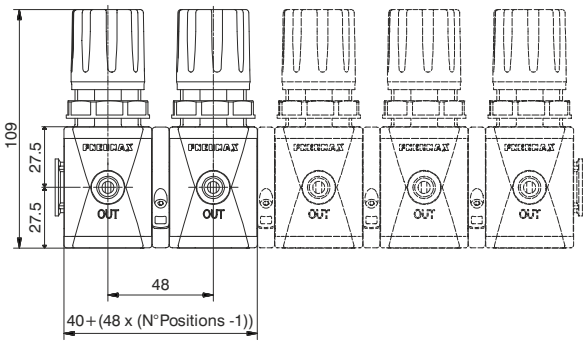

Example: GT171BB4CCCC : Combined group comprising 4 size 1 Regulators Technopolymer threads, G1/4" connections and 0 to 8 bar adjusting range

Flow rate curves

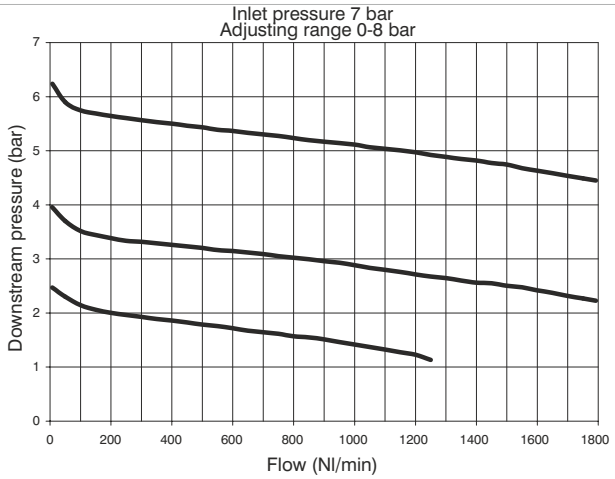

Operational characteristics

- Inlet pressure common for the whole manifold of regulator.
- A maximum of 6 regulators can be mounted
- Air supply can be applied by both directions.

Note

The pressure must be always regulating while increasing. For a more precise regulation and higher sensibility, the use of a regulator with a pressure range as close as possible to the regulated pressure is recommended.

Technical characteristics

Connections	G 1/8" - G 1/4"
Max. inlet pressure	13 bar
Working temperature	-5°C +50°C
Pressure range	0-2 bar / 0-4 bar 0-8 bar / 0-12 bar
Assembly positions	indifferent
Max. fitting torque (with Technopolymer threads)	G1/8" = 4 Nm G1/4" = 9 Nm
Max. fitting torque (with threaded inserts)	G1/8" = 15 Nm G1/4" = 20 Nm

Ordering code

G V 171 C T N G G G G G

V	VERSION
	N = Metal inserts
	T = Technopolymer thread
C	CONNECTIONS
	A = G1/8" (only for "N" version)
	B = G1/4"
	C = 1/4 NPT (only for "N" version)
T	TYPE
	B = Standard with flanges X
	M = Manometer included with flanges X
	W = Standard with flanges Y
	Z = Manometer included with flanges Y
N	NUMBER REGULATORS
	2 = 2 regulators
	3 = 3 regulators
	4 = 4 regulators
	5 = 5 regulators
	6 = 6 regulators
G	ADJUSTING RANGE 1
	A = 0-2 bar
	B = 0-4 bar
	C = 0-8 bar
	D = 0-12 bar
G	ADJUSTING RANGE 2
	A = 0-2 bar
	B = 0-4 bar
	C = 0-8 bar
	D = 0-12 bar
G	ADJUSTING RANGE 3
	A = 0-2 bar
	B = 0-4 bar
	C = 0-8 bar
	D = 0-12 bar
G	ADJUSTING RANGE 4
	A = 0-2 bar
	B = 0-4 bar
	C = 0-8 bar
	D = 0-12 bar
G	ADJUSTING RANGE 5
	A = 0-2 bar
	B = 0-4 bar
	C = 0-8 bar
	D = 0-12 bar
G	ADJUSTING RANGE 6
	A = 0-2 bar
	B = 0-4 bar
	C = 0-8 bar
	D = 0-12 bar

Dimensions with Y type flanges

2 position manifold

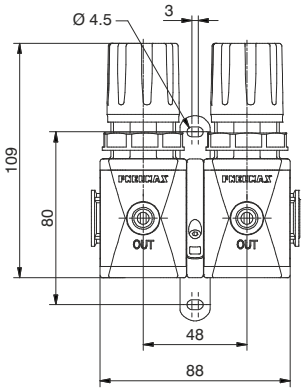

3 position manifold

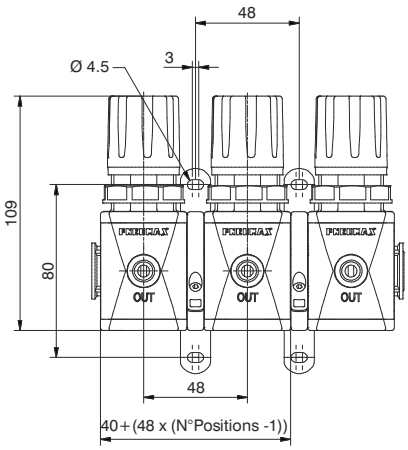

4 position manifold

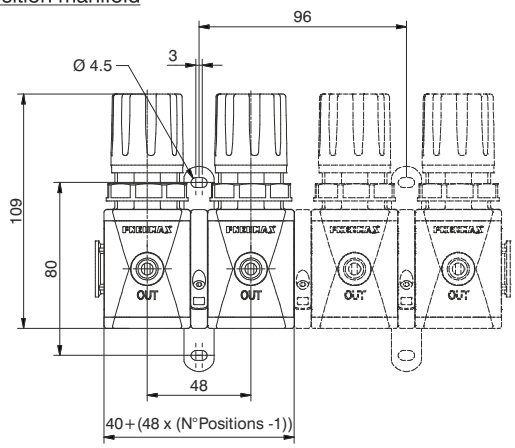

5 position manifold

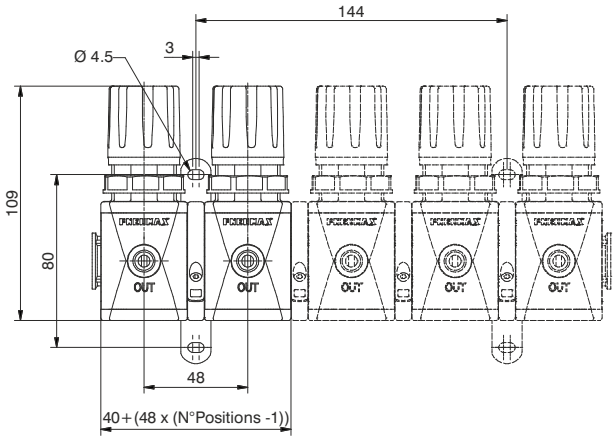

6 position manifold

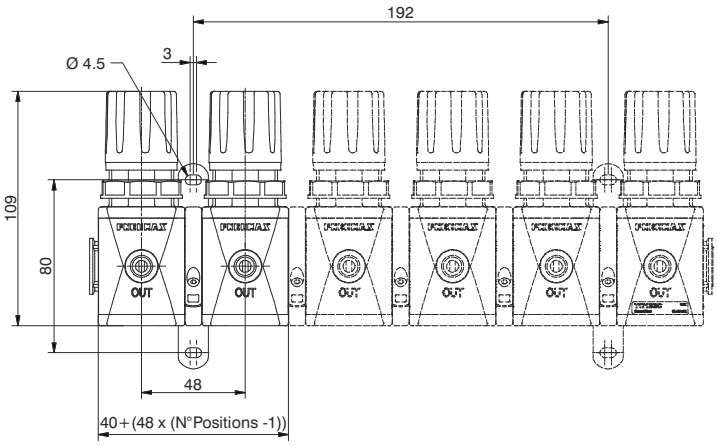

3

Filter-Regulator (E)

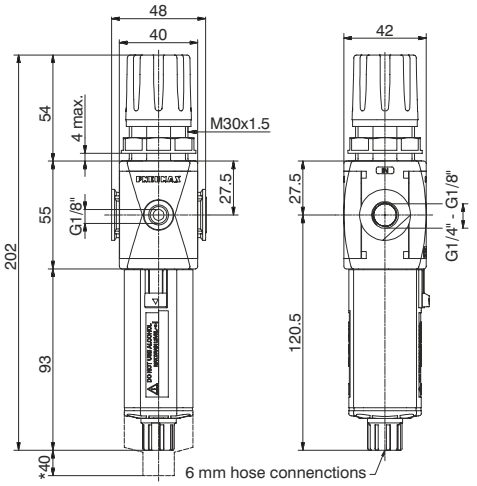

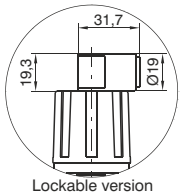

Lockable version
Detail

*Bowl removal maximum height

Example : T171BEBC : size 1, Filter-regulator with Technopolymer threads, G1/4" connections, 20 μm filtering pore size, 0 to 8 bar adjusting range

Flow rate curves

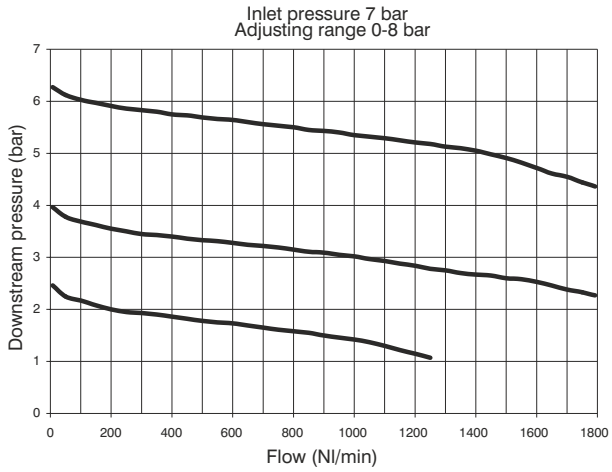

Adjustment characteristics

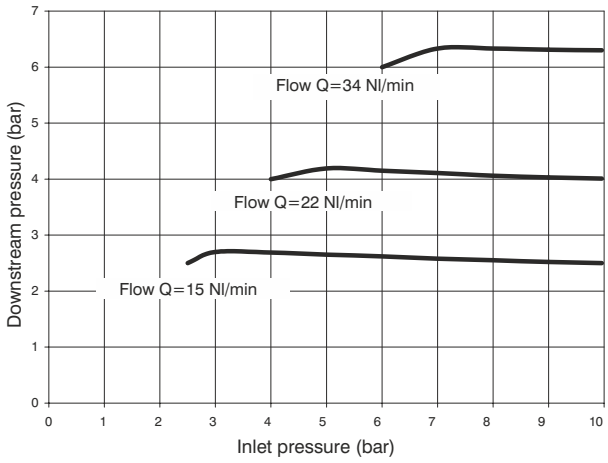

Operational characteristics

- Filter - diaphragm pressure regulator with relieving.
- Low hysteresis rolling diaphragm.
- Balanced system.
- Double filtering action: air flow centrifugation and filter element.
- Filtering element made of HDPE (high density polyethylene) available in three different filtration grades (5μm, 20μm and 50μm) can be regenerated by washing it or replaced.
- Transparent bowl made of polycarbonate with bowl protection guard.
- Bowl assembly via bayonet type quick coupling mechanism with safety button.
- Semi-automatic drain mounted as standard; automatic drain upon request
- Available in four pressure ranges up to 12 bar.
- Operating knob can be locked in position by pressing it down once the desired P2 (regulated pressure) pressure value is achieved.
- Fitted with panel mounting locking ring.

Note

The pressure must be always regulating while increasing. For a more precise regulation and higher sensibility, the use of a regulator with a pressure range as close as possible to the regulated pressure is recommended. In order to ensure adequate flow on the auto drain version it is recommended to use minimum a 6mm fitting.

Technical characteristics

Connections	G 1/8" - G 1/4"
Max. inlet pressure	13 bar
Minimum working pressure with automatic drain	0,5 bar
Maximum working pressure with automatic drain	10 bar
Working temperature	-5°C +50°C
Pressure gauge connections	G 1/8"
Weight with Technopolymer threads	gr. 190
Weight with threaded inserts	gr. 200
Pressure range	0-2 bar / 0-4 bar 0-8 bar / 0-12 bar
Filter pore size	5 μm - 20 μm - 50 μm
Bowl capacity	18 cm^3
Assembly positions	Vertical
Max. fitting torque (with Technopolymer threads)	G1/8" = 4 Nm G1/4" = 9 Nm
Max. fitting torque (with threaded inserts)	G1/8" = 15 Nm G1/4" = 20 Nm

Ordering code

V171CESGTOZ

V	VERSION
	N = Metal inserts
	T = Technopolymer thread
C	CONNECTIONS
	A = G1/8" (only for "N" version)
	B = G1/4"
	C = 1/4 NPT (only for "N" version)
S	FILTER PORE SIZE
	A = 5 μm
	B = 20 μm
	C = 50 μm
G	ADJUSTING RANGE
	A = 0-2 bar
	B = 0-4 bar
	C = 0-8 bar
	D = 0-12 bar
T	TYPE
	= Standard *
	S = Automatic drain
O	OPTIONS
	= Standard *
	K = Lockable version
Z	BOWL OPTIONS
	= Standard *
	N = Nylon bowl

* no additional letter required

Filter-regulator including gauge (EM)(EW)

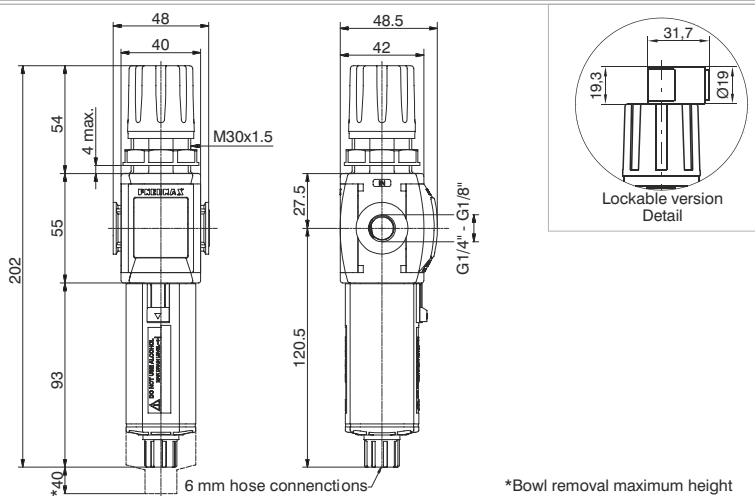

Example: T171BEMBC : size 1, Filter-Regulator including gauge with Technopolymer threads, G1/4" connections, with 20 μm filtering pore size, 0 to 8 bar adjusting range

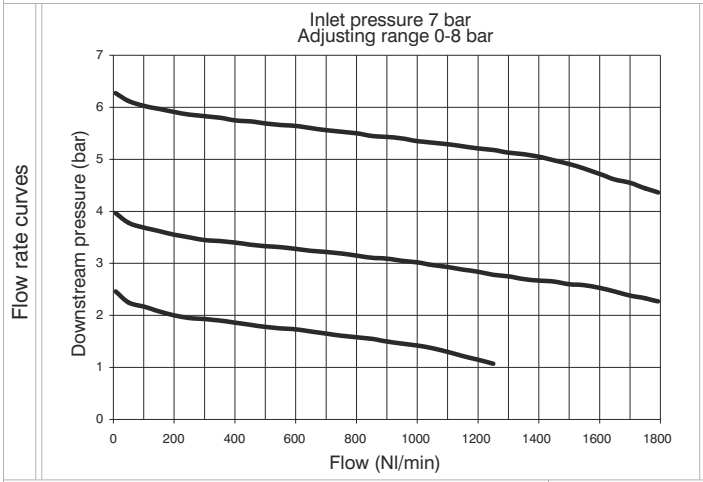

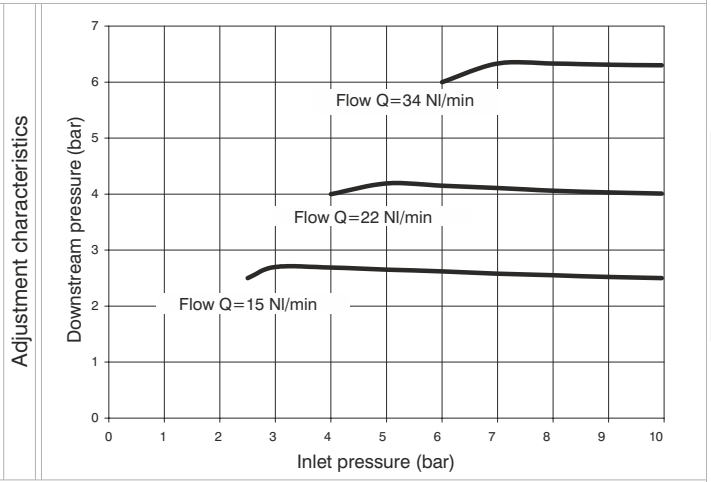

Operational characteristics

- Filter - diaphragm pressure regulator with relieving.
- Low hysteresis rolling diaphragm.
- Balanced system.
- Double filtering action: air flow centrifugation and filter element.
- Filtering element made of HDPE (high density polyethylene) available in three different filtration grades (5μm, 20μm and 50μm) can be regenerated by washing it or replaced.
- Transparent bowl made off polycarbonate with bowl protection guard.
- Bowl assembly via bayonet type quick coupling mechanism with safety button.
- Semi-automatic drain mounted as standard; automatic drain upon request
- Available in four pressure ranges up to 12 bar.
- Operating knob can be locked in position by pressing it down once the desired P2 (regulated pressure) pressure value is achieved.
- Fitted with panel mounting locking ring.
- Integrated manometer 0-12 bar as standard (for 0-8 and 0-12 bar range) and 0-4 bar (for 0-2 and 0-4 range)

Note

The pressure must be always regulating while increasing. For a more precise regulation and higher sensibility, the use of a regulator with a pressure range as close as possible to the regulated pressure is recommended. In order to ensure adequate flow on the auto drain version it is recommended to use minimum a 6mm fitting.

Technical characteristics

Connections	G 1/8" - G 1/4"
Max. inlet pressure	13 bar
Minimum working pressure with automatic drain	0,5 bar
Maximum working pressure with automatic drain	10 bar
Working temperature	-5°C +50°C
Weight with Technopolymer threads	gr. 200
Weight with threaded inserts	gr. 210
Pressure range	0-2 bar / 0-4 bar 0-8 bar / 0-12 bar
Filter pore size	5 μm - 20 μm - 50 μm
Bowl capacity	18 cm^3
Assembly positions	Vertical
Max. fitting torque (with Technopolymer threads)	G1/4" = 9 Nm
Max. fitting torque (with threaded inserts)	G1/8" = 15 Nm G1/4" = 20 Nm

Ordering code

V171CEDSGTOZ

V	VERSION
	N = Metal inserts
	T = Technopolymer thread
C	CONNECTIONS
	A = G1/8"(only for "N" version)
	B = G1/4"
	C = 1/4 NPT(only for "N" version)
D	FLOW DIRECTION
	M = from left to right
	W = from right to left
S	FILTER PORE SIZE
	A = 5 μm
	B = 20 μm
	C = 50 μm
G	ADJUSTING RANGE
	A = 0-2 bar
	B = 0-4 bar
	C = 0-8 bar
	D = 0-12 bar
T	TYPE
	= Standard *
	S = Automatic drain
O	OPTIONS
	= Standard *
	K = Lockable version
Z	BOWL OPTIONS
	= Standard *
	N = Nylon bowl

* no additional letter required

Regulator with pressure switch (RP)(RZ)

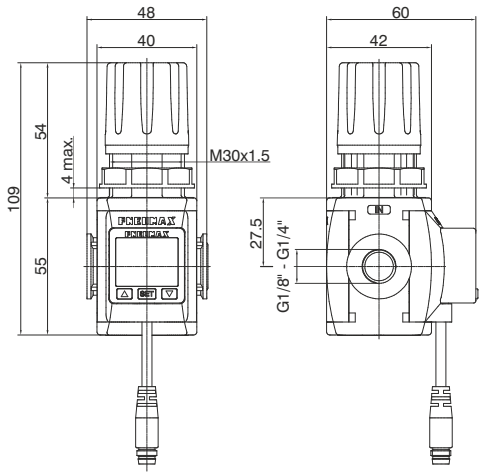

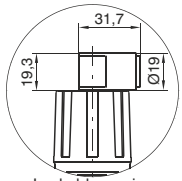

Lockable version
Detail

Example : T171BRPCA : size 1, Regulator with Technopolymer threads, G1/4" connections, 0 to 8 bar adjusting range, with pressure switch with M8 connector PNP

Flow rate curves

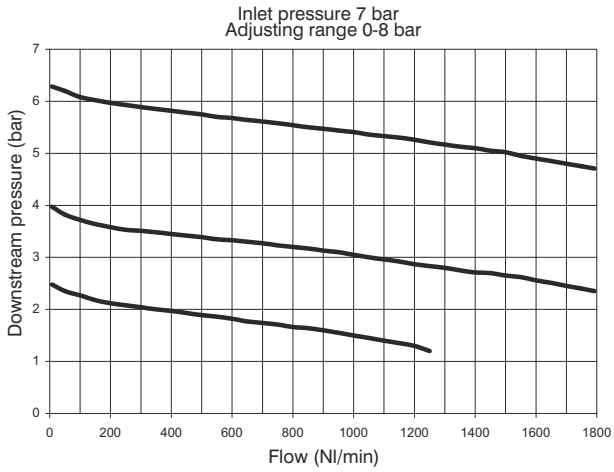

Adjustment characteristics

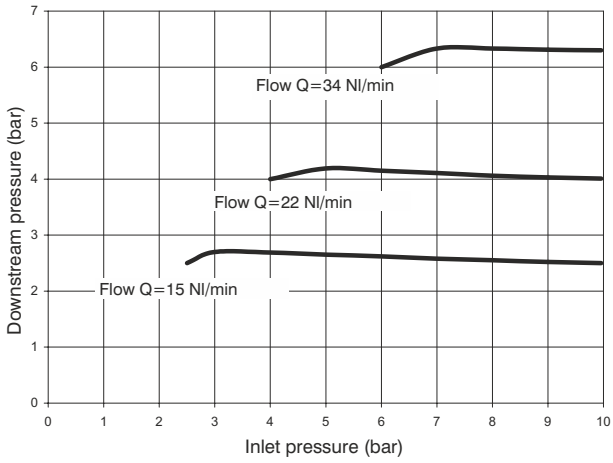

Operational characteristics

- Diaphragm pressure regulator with relieving.
- Low hysteresis rolling diaphragm.
- Balanced system.
- Available in four pressure ranges up to 12 bar.
- Operating knob can be locked in position by pressing it down once the desired P2 (regulated pressure) pressure value is achieved.
- Fitted with panel mounting locking ring.
- Pressure switch as standard

Note

The pressure must be always regulating while increasing. For a more precise regulation and higher sensibility, the use of a regulator with a pressure range as close as possible to the regulated pressure is recommended.

Technical characteristics

Connections	G 1/8" - G 1/4"
Max. inlet pressure	13 bar
Working temperature	0°C +50°C
Weight with Technopolymer threads	gr. 140
Weight with threaded inserts	gr. 150
Pressure range	0-2 bar / 0-4 bar 0-8 bar / 0-12 bar
Assembly positions	Indifferent
Max. fitting torque (with Technopolymer threads)	G1/4" = 9 Nm
Max. fitting torque (with threaded inserts)	G1/8" = 15 Nm G1/4" = 20 Nm

Ordering code

V171CRDGTOP

V	VERSION
	N = Metal inserts
	T = Technopolymer thread
C	CONNECTIONS
	A = G1/8" (only for "N" version)
	B = G1/4"
	C = 1/4 NPT (only for "N" version)
D	FLOW DIRECTION
	P = from left to right
	Z = from right to left
G	ADJUSTING RANGE
	A = 0-2 bar
	B = 0-4 bar
	C = 0-8 bar
	D = 0-12 bar
T	TYPE
	= Standard *
	F = Controlled refiel + improved relieving
	L = no relieving
	R = Improved relieving
O	OPTIONS
	= Standard *
	K = Lockable version
P	PRESSURE SWITCH OPTION
	A = Cable 150 mm+M8 PNP
	B = Cable 150 mm+M8 NPN
	C = Cable 2 mt. PNP
	D = Cable 2 mt. NPN

* no additional letter required

Filter regulator with pressure switch (EP)(EZ)

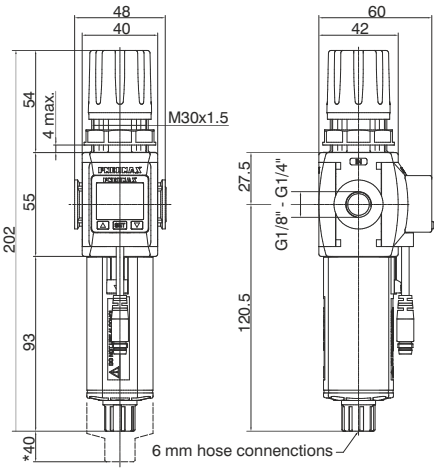

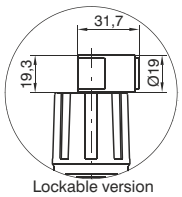

Lockable version
Detail

* Bowl removal maximum height

Example: T171BEPBCA : size 1, Filter-regulator with Technopolymer threads, G1/4" connections, 20 μm filtering pore size, 0 to 8 bar adjusting range, with pressure switch with M8 connector PNP

Flow rate curves

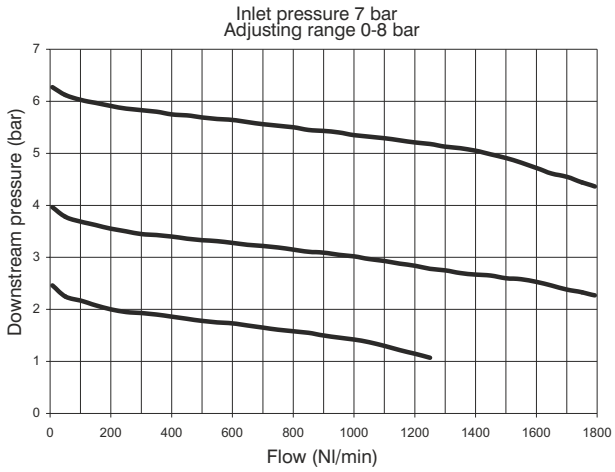

Adjustment characteristics

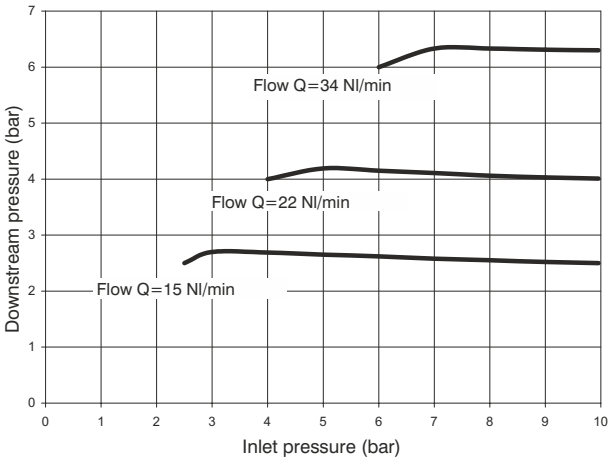

Operational characteristics

- Filter - diaphragm pressure regulator with relieving.
- Low hysteresis rolling diaphragm.
- Balanced system.
- Double filtering action: air flow centrifugation and filter element.
- Filtering element made of HDPE (high density polyethylene) available in three different filtration grades (5μm, 20μm and 50μm) can be regenerated by washing it or replaced.
- Transparent bowl made off polycarbonate with bowl protection guard.
- Bowl assembly via bayonet type quick coupling mechanism with safety button.
- Semi-automatic drain mounted as standard; automatic drain upon request
- Available in four pressure ranges up to 12 bar.
- Operating knob can be locked in position by pressing it down once the desired P2 (regulated pressure) pressure value is achieved.
- Fitted with panel mounting locking ring.
- Pressure switch as standard

Note

The pressure must be always regulating while increasing. For a more precise regulation and higher sensibility, the use of a regulator with a pressure range as close as possible to the regulated pressure is recommended. In order to ensure adequate flow on the auto drain version it is recommended to use minimum a 6mm fitting.

Technical characteristics

Connections	G 1/8" - G 1/4"
Max. inlet pressure	13 bar
Minimum working pressure with automatic drain	0,5 bar
Maximum working pressure with automatic drain	10 bar
Working temperature	0°C +50°C
Weight with Technopolymer threads	gr. 200
Weight with threaded inserts	gr. 210
Pressure range	0-2 bar / 0-4 bar 0-8 bar / 0-12 bar
Filter pore size	5 μm - 20 μm - 50 μm
Bowl capacity	18 cm^3
Assembly positions	Vertical
Max. fitting torque (with Technopolymer threads)	G1/4" = 9 Nm
Max. fitting torque (with threaded inserts)	G1/8" = 15 Nm G1/4" = 20 Nm

Ordering code

V171CEDSGTOPZ

V	VERSION
	N = Metal inserts
	T = Technopolymer thread
C	CONNECTIONS
	A = G1/8" (only for "N" version)
	B = G1/4"
	C = 1/4 NPT (only for "N" version)
D	FLOW DIRECTION
	P = from left to right
	Z = from right to left
S	FILTER PORE SIZE
	A = 5 μm
	B = 20 μm
	C = 50 μm
G	ADJUSTING RANGE
	A = 0-2 bar
	B = 0-4 bar
	C = 0-8 bar
	D = 0-12 bar
T	TYPE
	= Standard *
	S = Automatic drain
O	OPTIONS
	= Standard *
	K = Lockable version
P	PRESSURE SWITCH OPTION
	A = Cable 150 mm+M8 PNP
	B = Cable 150 mm+M8 NPN
	C = Cable 2 mt. PNP
	D = Cable 2 mt. NPN
Z	BOWL OPTIONS
	= Standard *
	N = Nylon bowl

* no additional letter required

CHARACTERISTICS

- 3 color digital LCD display, easy readout
- 4 units of measurement for pressure indication
- PNP and NPN output
- N.O. and N.C. output contact
- Not available individually, but only with a Regulator or a Filter-regulator

OUTPUT CIRCUIT WIRING DIAGRAMS

PNP output

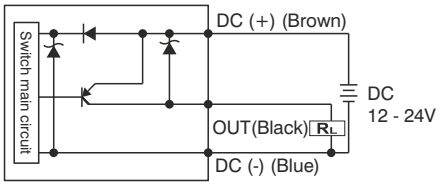

NPN output

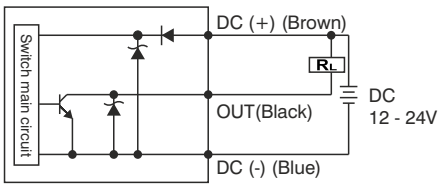

M8 CONNECTOR PIN LAY OUT

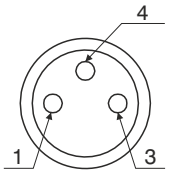

1 : (+)
3 : (-)
4 : (OUT)

3 WIRES CABLE LAY OUT

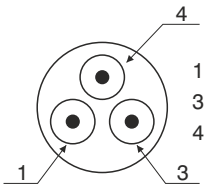

1 : Brown (+)
3 : Blue (-)
4 : Black (OUT)

Cable ordering code

MCH1	cable 3 wires l=2,5m with M8 connector
MCH2	cable 3 wires l=5m with M8 connector
MCH3	cable 3 wires l=10m with M8 connector

Connector

TECHNICAL CHARACTERISTICS	
Adjusting range	0 - 10 bar / 0 - 1MPa
Max. inlet pressure	15 bar / 1,5 MPa
Fluid	Filtered and dehumidified air
Display unit of measurement	MPa - kgf/cm² - bar - psi
Supply voltage	12 - 24 VDC
Current consumption	≤40mA (without load)
Digital output type	NPN - PNP
Type of contact	Normally Open - Normally Closed
Max. load current	125 mA
Digital output activation mode	single threshold with fixed hysteresis - window with fixed hysteresis - window without hysteresis
Digital output activation time	0.05s - 0.25s - 0.5s - 1s - 2s - 3s (selections for chattering-proof function)
Display characteristics	Double 3 1/2 digit display Digital output status indication Three-pushbuttons touchpad
Indicator accuracy	≤±2% F.S. ± 1 digit
Protection grade	IP 40
Temperature	0 - 50 °C
Cable section	3 x 0,129mm², Ø4 mm, PVC

Lubricator (L)

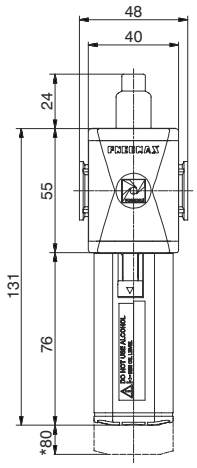

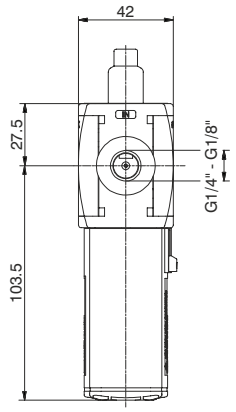

*Bowl removal maximum height

Example : T171BL : size 1, Lubricator with Technopolymer threads, G1/4" connections

Flow rate curves

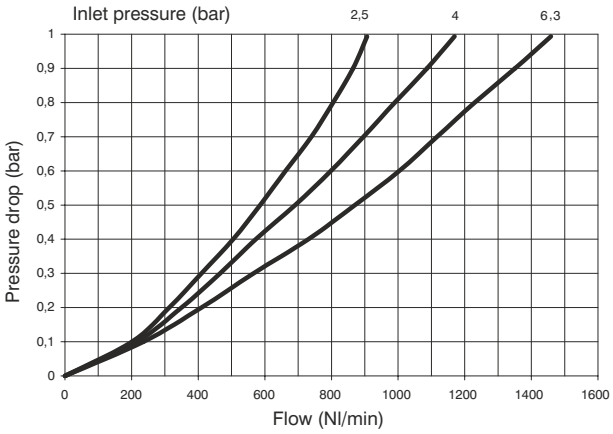

Operational characteristics

- Oil mist lubrication with variable orifice size in function of the flow rate
- Oil quantity regulation mechanism and oil quantity visualization dome made of polycarbonate.
- Transparent bowl made off polycarbonate with bowl protection guard.
- Bowl assembly via bayonet type quick coupling mechanism with safety button.

Note

Install as close as possible to the point o fuse
Do not use alcohol , deterging oils or solvents.

Technical characteristics

Connections	G 1/8" - G 1/4"	
Max. inlet pressure	13 bar	
Working temperature	-5°C +50°C	
Weight with Technopolymer threads	gr. 110	
Weight with threaded inserts	gr. 120	
Indicative oil drop rate	1 drop every 300/600 Nl	
Oil type	FD22 - HG32	
Bowl capacity	36 cm^3	
Assembly positions	Vertical	
Max. fitting torque (with Technopolymer threads)	G1/4" = 9 Nm	
Max. fitting torque (with threaded inserts)	G1/8" = 15 Nm G1/4" = 20 Nm	
Min. operational flow at 6,3 bar	40 Nl/min.	

Ordering code

Ⓥ171ⒸLⓏ

Ⓥ	VERSION
	N = Metal inserts
	T = Technopolymer thread
Ⓒ	CONNECTIONS
	A = G1/8" (only for "N" version)
	B = G1/4"
	C = 1/4 NPT (only for "N" version)
Ⓩ	BOWL OPTIONS
	= Standard *
	N = Nylon bowl

* no additional letter required

Shut-off valve (VL)

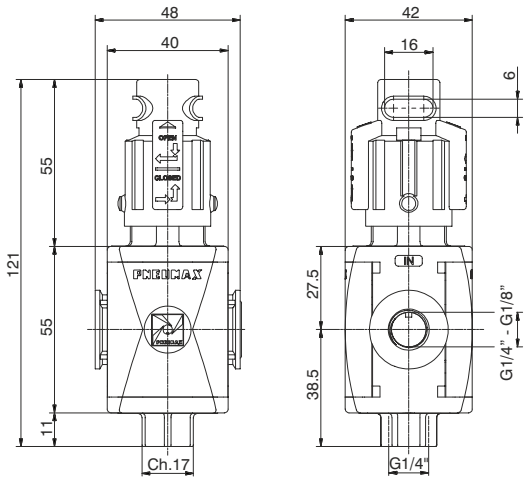

Example: T171BVL : size 1, Shut-off valve with Technopolymer threads, G1/4" connections

Operational characteristics

- Manual operated 3 ways poppet valve.
- Double handle action for valve opening: pushing and rotating (clockwise).
- The valve can be closed and the down stream circuit depressurized by rotating anticlockwise the knob.
- Knob lockable with three padlocks.

Technical characteristics

Connections	G 1/8" - G 1/4"
Max. inlet pressure	13 bar
Discharge connection	G1/4"
Working temperature	-5°C +50°C
Weight with Technopolymer threads	gr. 100
Weight with threaded inserts	gr. 110
Assembly positions	Indifferent
Handle opening and closing angle	90°
Max. fitting torque (with Technopolymer threads)	G1/4" = 9 Nm
Max. fitting torque (with threaded inserts)	G1/8" = 15 Nm G1/4" = 20 Nm
Nominal flow rate at 6 bar with Δp=1	1400 Nl/min.
Exhaust nominal flow rate at 6 bar with Δp=1	550 Nl/min.

Ordering code

Ⓥ171ⒸVL

Ⓥ	VERSION
	N = Metal inserts
	T = Technopolymer thread
Ⓒ	CONNECTIONS
	A = G1/8" (only for "N" version)
	B = G1/4"
	C = 1/4 NPT (only for "N" version)

3

Pneumatic shut-off valve (VP)

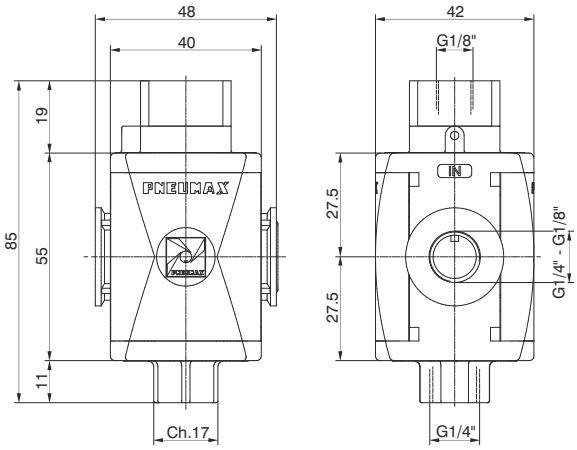

Example: T171BVP : size 1, Pneumatic shut-off valve with Technopolymer threads, G1/4" connections

Operational characteristics

- Pneumatic operated 3 ways poppet valve.
- When the pneumatic signal is removed the valves exhaust the pneumatic circuit

Technical characteristics

Connections	G 1/8” - G 1/4”
Discharge connection	G1/4"
Pilot port size	G1/8"
Working temperature	-5°C +50°C
Weight with technopolymer threads	gr. 94
Weight with threaded inserts	gr. 99
Assembly positions	Indifferent
Min. pressure working	3 bar
Max. pressure working	10 bar
Max. fitting torque (with Technopolymer threads)	G1/4" = 9 Nm
Max. fitting torque (with threaded inserts)	G1/8" = 15 Nm G1/4" = 20 Nm
Nominal flow rate at 6 bar with Δp=1	1400 Nl/min.
Exhaust nominal flow rate at 6 bar with Δp=1	550 Nl/min.

Ordering code

Ⓥ171ⒸVP

Ⓥ	VERSION
	N = Metal inserts
	T = Technopolymer thread
Ⓒ	CONNECTIONS
	A = G1/8"(only for "N" version)
	B = G1/4"
	C = 1/4 NPT(only for "N" version)

3

Electric shut-off valve (VE)

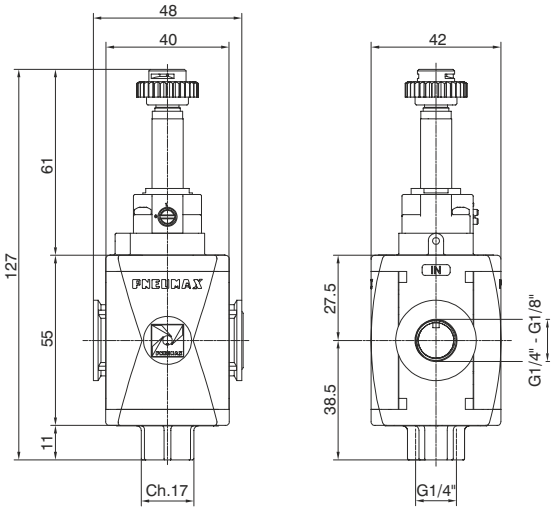

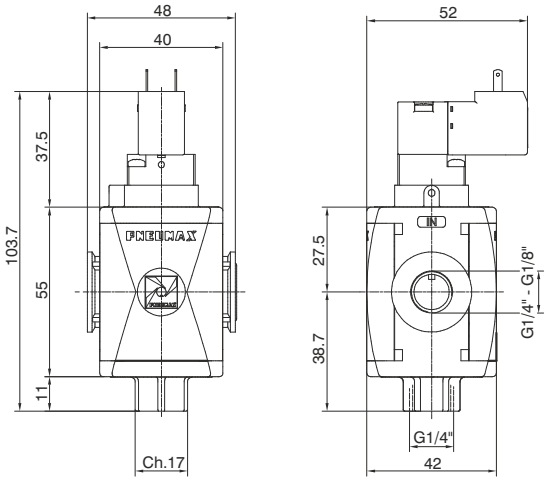

Example : T171BVEB2 : size 1, Electric shut-off valve, with M2 pilot without coil, Technopolymer threads, G1/4" connections

Operational characteristics

- Solenoid operated 3 ways poppet valve.
- The model fitted with 15 mm pilots uses pilots series N33_0A and N33_0E (1 Watt)

Technical characteristics

Supply and operating connections	G 1/8" - G 1/4"
Discharge connections	G 1/4"
Working temperature	-5°C +50°C
Weight with Technopolymer threads	130 g
Weight with threaded inserts	140 g
Assembly positions	Indifferent
Min. Pressure working	3 bar
Max. Pressure working	10 bar
Max. fitting torque (with Technopolymer threads)	G1/4" = 9 Nm
Max. fitting torque (with threaded inserts)	G1/8" = 15 Nm G1/4" = 20 Nm
Nominal flow rate at 6 bar with Δp=1	1400 Nl/min.
Exhaust nominal flow rate at 6 bar with Δp=1	550 Nl/min.

Ordering code

Ⓥ171ⒸVEⒶ

Ⓥ	VERSION
	N = Metal inserts
	T = Technopolymer thread
Ⓒ	CONNECTIONS
	A = G1/8"(only for "N" version)
	B = G1/4"
	C = 1/4 NPT(only for "N" version)
Ⓐ	15 mm COIL VOLTAGE
	A4 = 12 V DC
	A5 = 24 V DC
	A6 = 24 V AC (50-60 Hz)
	A7 = 110 V AC (50-60 Hz)
	A8 = 230 V AC (50-60 Hz)
	A9 = 24 V DC (1 Watt)
	22 mm COIL VOLTAGE
	B2 = Without coil M2 mechanic
	B4 = 12 V DC
	B5 = 24 V DC
	B6 = 24 V AC (50-60 Hz)
	B7 = 110 V AC (50-60 Hz)
	B8 = 230 V AC (50-60 Hz)
	B9 = 24 V DC (2 Watt)
	30 mm COIL VOLTAGE
	C5 = 24 V DC
	C6 = 24 V AC (50-60 Hz)
	C7 = 110 V AC (50-60 Hz)
	C8 = 230 V AC (50-60 Hz)
	C9 = 24 V DC (2 Watt)

Progressive start-up valve (AP)

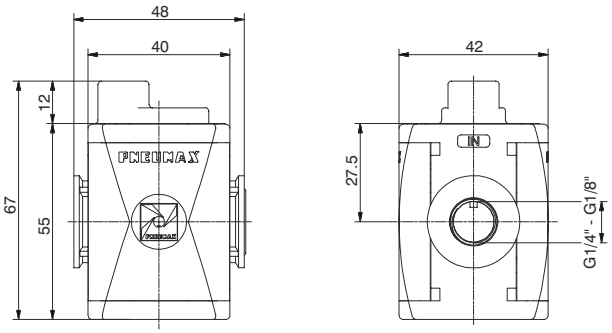

Example : T171BAP : size 1, Progressive start-up valve with Technopolymer threads, G1/4" connections

Operational characteristics

- Down stream circuit filling time regulated via a built in flow regulator.
- Full pressure is allowed once the down stream circuit pressure reaches 50% of the inlet pressure.

Technical characteristics

Connections	G 1/8" - G 1/4"
Max. inlet pressure	13 bar
Working temperature	-5°C +50°C
Weight with Technopolymer threads	gr. 70
Weight with threaded inserts	gr. 80
Max. fitting torque (with Technopolymer threads)	G1/4" = 9 Nm
Max. fitting torque (with threaded inserts)	G1/8" = 15 Nm G1/4" = 20 Nm
Assembly positions	Indifferent
Min. pressure working	2,5 bar
Nominal flow rate at 6 bar with Δp=1	1400 Nl/min.
Fully open built in flow regulator flow rate	75 Nl/min.

Ordering code

Ⓥ171ⒸAP

Ⓥ	VERSION N = Metal inserts T = Technopolymer thread
Ⓒ	CONNECTIONS A = G1/8" (only for "N" version) B = G1/4" C = 1/4 NPT (only for "N" version)

Air intake (PA)

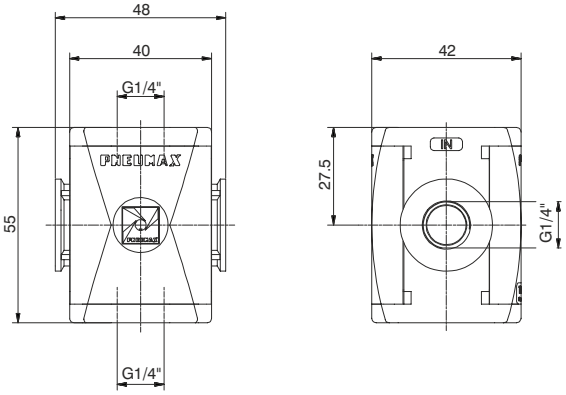

Example : T171BPA : size 1, Air intake with Technopolymer threads, G1/4" connections

Operational characteristics

- Available with two G1/4" threaded connections.

Attention
For this product are available only Technopolymer connections

Technical characteristics

Connections	G 1/4"
Max. inlet pressure	13 bar
Working temperature	-5°C +50°C
Weight	gr. 52
Assembly positions	Indifferent
Max. fitting torque (with Technopolymer threads)	G1/4" = 9 Nm

Ordering code

T171BPA

3

Pressure switch (PP)

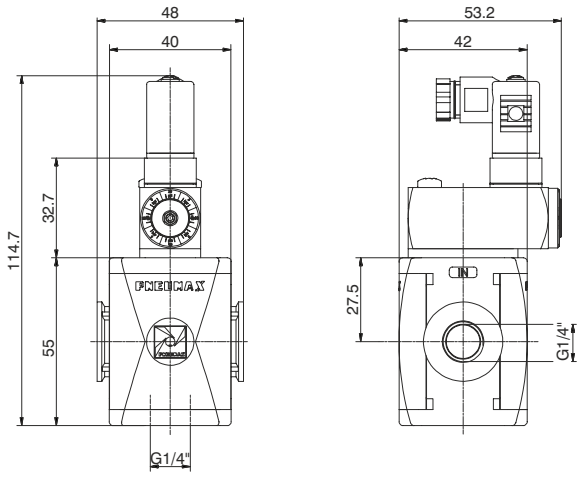

Example: T171BPP : Size 1, Pressure switch with Technopolymer threads, G1/4" connections

Operational characteristics

- Built in adjustable pressure switch (2 to 10 bar) with electrical connection.
- G1/4" threaded connection on the bottom face.
- The electrical connection is made by mean of a 15 mm connector DIN 43650 type C. The microswitch contact could be normally closed or open (change overswitch).

Attention
For this product are available only Technopolymer connections

Technical characteristics

		Ordering code
Connections	G 1/4"	
Max. inlet pressure	13 bar	**T171BPP**
Working temperature	-5°C +50°C	
Weight	gr. 138	
Microswitch capacity	1A	
Grade of protection (with connector assembled)	IP 65	
Adjusting range	2 -10 bar	
Assembly positions	Indifferent	
Max. fitting torque (with Technopolymer threads)	G1/4" = 9 Nm	
Microswitch maximum tension	250 VAC	

Connection

1 = neutral
2 = N.C. contact
3 = N.O. contact

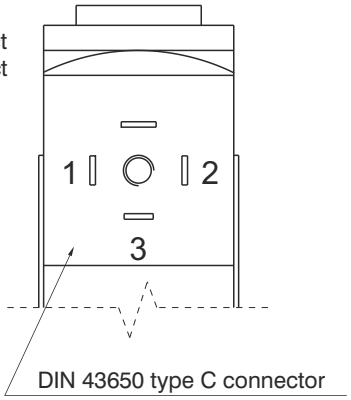

Flange X

Ordering code
T171X

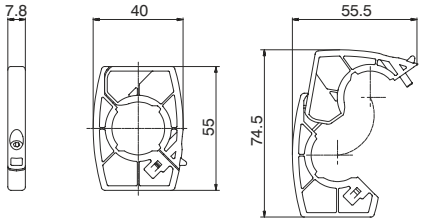

Weight 12 gr.
Example : T171X : Size 1 coupling flange
-Enables the quick connnection of two functions

Flange Y

Ordering code
T171Y

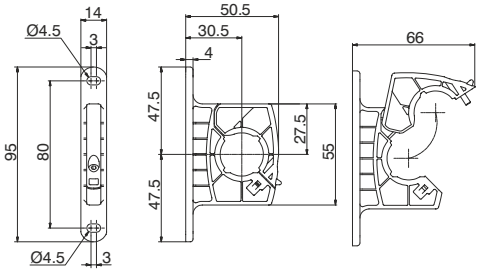

Weight 18 gr.
Example : T171Y : Size 1 coupling flange with mounting holes
- Used to couple together two elements and to panel mount them.
- Used to panel mount one single element.

Single unit panel mounting dimensions

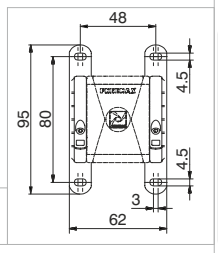

Aluminium flange Y

Ordering code
N171Y

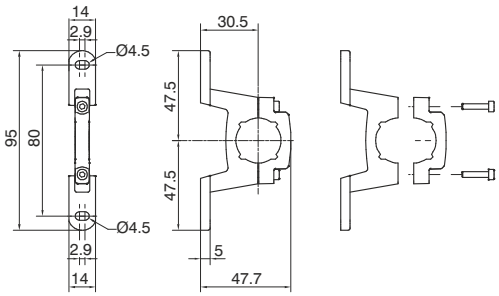

Weight 27 gr.
Example : N171Y : Size 1 coupling aluminium flange with mounting holes
- Used to couple together two elements and to panel mount them.
- Used to panel mount one single element.

Single unit panel mounting dimensions

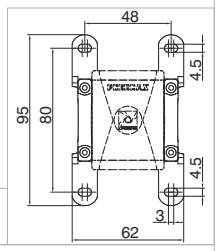

Fixing bracket

Ordering code
17150

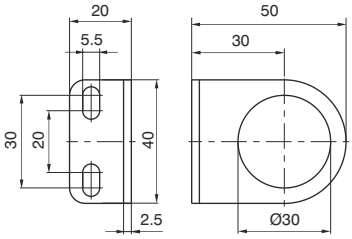

Weight 32 gr.
- Allows for regulators and filter regulators to be panel mounted.

Pressure gauge

Ordering code
17070Ⓥ.Ⓢ

Ⓥ	VERSION
	A = Dial Ø40
	B = Dial Ø50
Ⓢ	SCALE
	A = Scale 0-4 bar
	B = Scale 0-6 bar
	C = Scale 0-12 bar

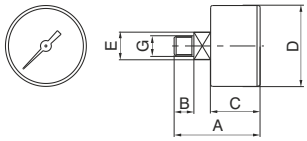

DIMENSIONS

CODE	A	B	C	D	E	G	Weight gr.
17070A	44	10	26	41	14	1/8"	60
17070B	45	10	27	49	14	1/8"	80

Service unit assembled (EM+L) (E+L) (EW+L)

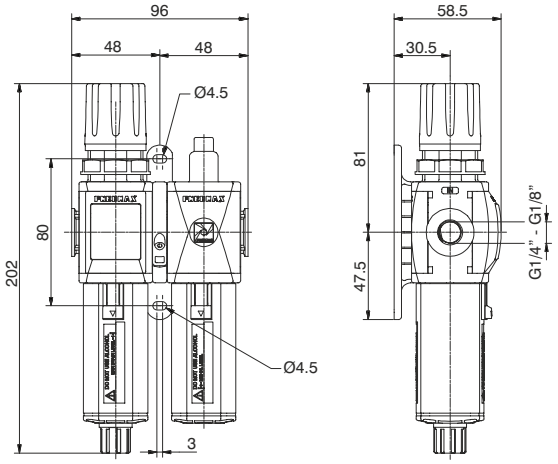

Example : GT171BHG : size 1, combined group comprising Filter-regulator and Lubricator, Technopolymer threads, G1/4" connections, 0 to 8 bar adjusting range and 20 μm filter pore size

Flow rate curves

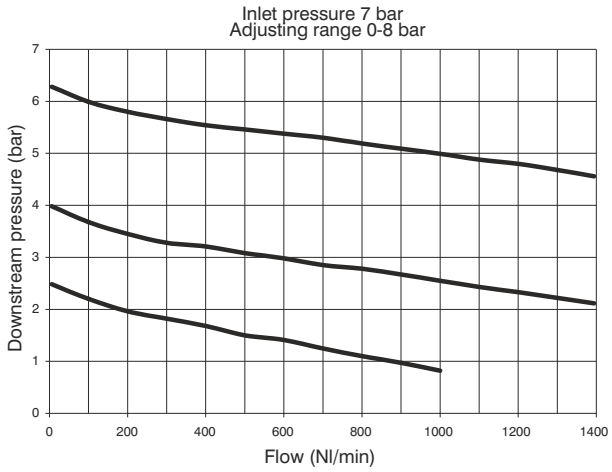

Adjustment characteristics

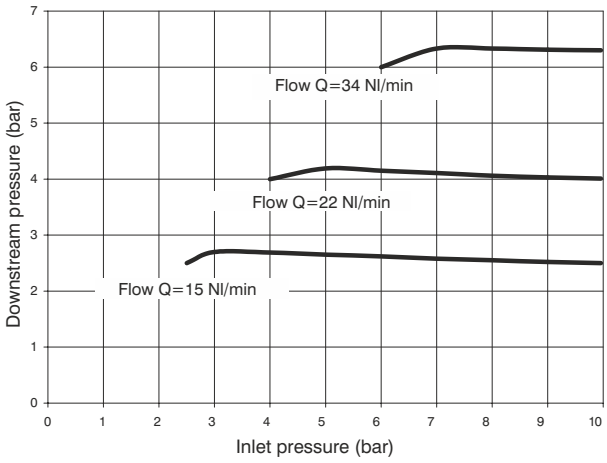

Operational characteristics

Combined group comprising Filter-regulator with built in manometer and Lubricator assembled with a (Y) type coupling kit for panel mounting.
Integrated manometer 0-12 bar as standard (for 0-8 and 0-12 bar range) and 0-4 bar (for 0-2 and 0-4 range)

Note

The pressure must be always regulating while increasing. For a more precise regulation and higher sensibility, the use of a regulator with a pressure range as close as possible to the regulated pressure is recommended.

Technical characteristics

Connections	G 1/8" - G 1/4"
Max. inlet pressure	13 bar
Working temperature	-5°C +50°C
Weight with Technopolymer threads	gr. 328
Weight with threaded inserts	gr. 348
Pressure range	0-2 bar / 0-4 bar 0-8 bar / 0-12 bar
Filter pore size	5 μm - 20 μm - 50 μm
Bowl capacity	18 cm^3
Indicative oil drop rate	1 drop every 300/600 Nl
Oil type	FD22 - HG32
Bowl capacity	36 cm^3
Assembly positions	Vertical
Max. fitting torque (with Technopolymer threads)	G1/4" = 9 Nm
Max. fitting torque (with threaded inserts)	G1/8" = 15 Nm G1/4" = 20 Nm
Min. operational flow at 6,3 bar	40 Nl/min.

Ordering code

G V 171 C T S O D Z

V	VERSION
	N = Metal inserts
	T = Technopolymer thread
C	CONNECTIONS
	A = G1/8" (only for "N" version)
	B = G1/4"
	C = 1/4 NPT (only for "N" version)
T	TYPE
	H = Built in gauge
	J = G1/8" gauge connection
S	FILTER PORE SIZE ADJUSTING RANGE
	C = 5 μm / 0-8 bar
	D = 5 μm / 0-12 bar
	G = 20 μm / 0-8 bar
	H = 20 μm / 0-12 bar
	N = 50 μm / 0-8 bar
	P = 50 μm / 0-12 bar
O	OPTIONS
	= Standard *
	S = Automatic drain
D	FLOW DIRECTION
	= Standard * (from left to right)
	W = from right to left
Z	BOWL OPTIONS
	= Standard *
	N = Nylon bowl

* no additional letter required

Service unit assembled (F+RM+L) (F+R+L) (F+RW+L)

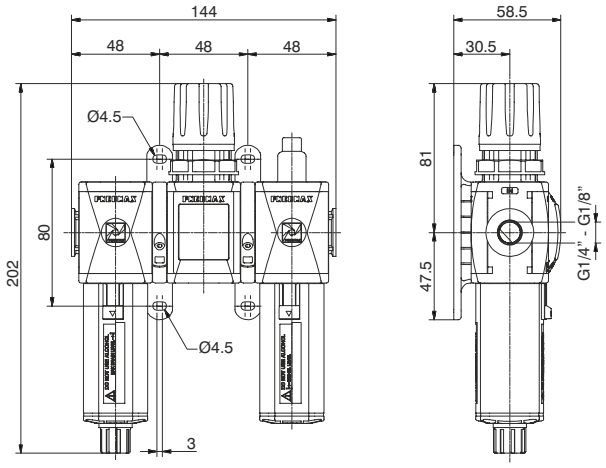

Example : GT171BKG : size 1 combined group comprising Filter, Regulator and Lubricator Technopolymer threads, G1/4" connections, 0 to 8 bar adjusting range and 20 μm filter pore size

Flow rate curves

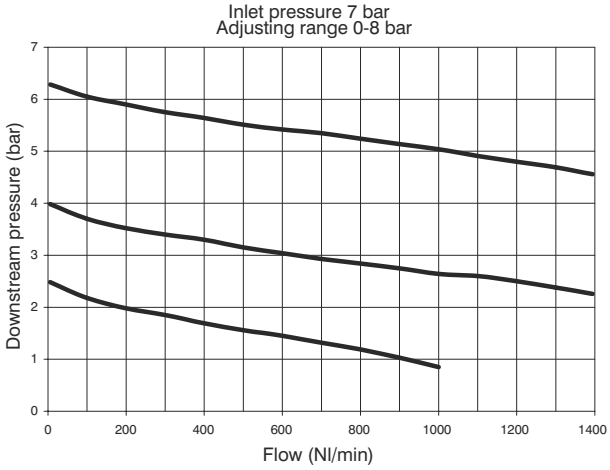

Adjustment characteristics

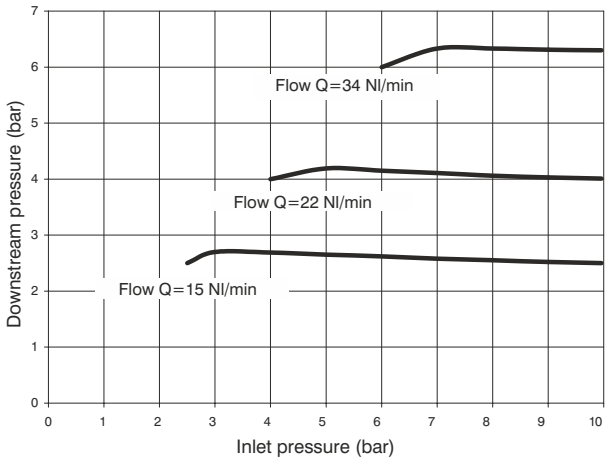

Operational characteristics

Combined group comprising Filter, Regulator with built in manometer and Lubricator assembled with two (Y) type coupling kits for panel mounting.
Integrated manometer 0-12 bar as standard (for 0-8 and 0-12 bar range) and 0-4 bar (for 0-2 and 0-4 range)

Note

The pressure must be always regulating while increasing. For a more precise regulation and higher sensibility, the use of a regulator with a pressure range as close as possible to the regulated pressure is recommended.

Technical characteristics

Connections	G 1/8" - G 1/4"
Max. inlet pressure	13 bar
Working temperature	-5°C +50°C
Weight with Technopolymer threads	gr. 406
Weight with threaded inserts	gr. 436
Pressure range	0-2 bar / 0-4 bar 0-8 bar / 0-12 bar
Filter pore size	5 μm - 20 μm - 50 μm
Bowl capacity	18 cm^3
Indicative oil drop rate	1 drop every 300/600 Nl
Oil type	FD22 - HG32
Bowl capacity	36 cm^3
Assembly positions	Vertical
Max. fitting torque (with Technopolymer threads)	G1/4" = 9 Nm
Max. fitting torque (with threaded inserts)	G1/8" = 15 Nm G1/4" = 20 Nm
Min. operational flow at 6,3 bar	40 Nl/min.

Ordering code

G Ⓥ 171 Ⓒ Ⓣ Ⓢ Ⓞ Ⓓ Ⓩ

Ⓥ	VERSION N = Metal inserts T = Technopolymer thread
Ⓒ	CONNECTIONS A = G1/8" (only for "N" version) B = G1/4" C = 1/4 NPT (only for "N" version)
Ⓣ	TYPE K = Built in gauge T = G1/8" gauge connection
Ⓢ	FILTER PORE SIZE ADJUSTING RANGE C = 5 μm / 0-8 bar D = 5 μm / 0-12 bar G = 20 μm / 0-8 bar H = 20 μm / 0-12 bar N = 50 μm / 0-8 bar P = 50 μm / 0-12 bar
Ⓞ	OPTIONS = Standard * S = Automatic drain
Ⓓ	FLOW DIRECTION = Standard (from left to right) W = from right to left
Ⓩ	BOWL OPTIONS = Standard * N = Nylon bowl

* no additional letter required

Service unit assembled (EM+PA+L) (E+PA+L) (EW+PA+L)

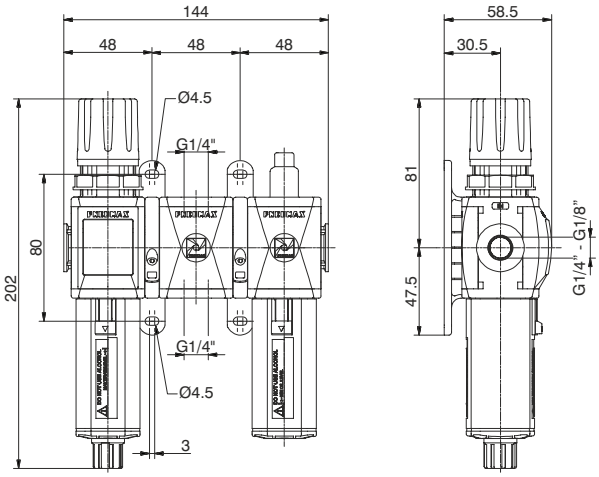

Example : GT171BNG : size 1 combined group comprising Filter-regulator, Air intake and Lubricator Technopolymer threads, G1/4" connections, 0 to 8 bar adjusting range and 20 μm filter pore size

Flow rate curves

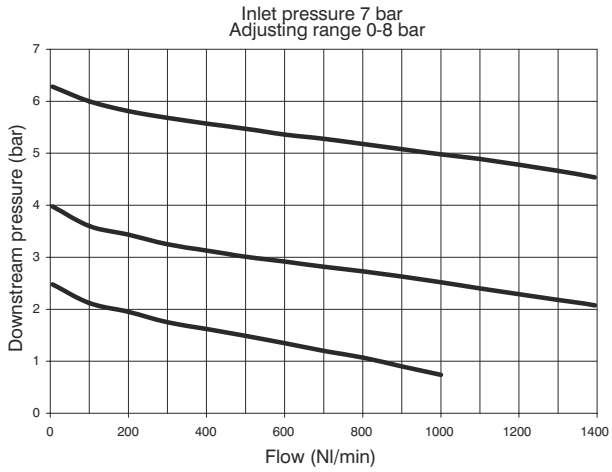

Adjustment characteristics

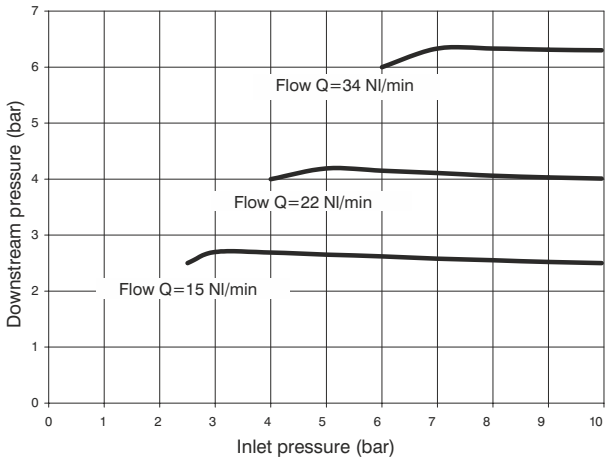

Operational characteristics

Combined group comprising Filter-regulator with built in manometer, Air intake and Lubricator assembled with two (Y) type coupling kits for panel mounting. Integrated manometer 0-12 bar as standard (for 0-8 and 0-12 bar range) and 0-4 bar (for 0-2 and 0-4 range)

Note

The pressure must be always regulating while increasing. For a more precise regulation and higher sensibility, the use of a regulator with a pressure range as close as possible to the regulated pressure is recommended.

Technical characteristics

Connections	G 1/8" - G 1/4"
Max. inlet pressure	13 bar
Working temperature	-5°C +50°C
Weight with Technopolymer threads	gr. 398
Weight with threaded inserts	gr. 418
Pressure range	0-2 bar / 0-4 bar 0-8 bar / 0-12 bar
Filter pore size	5 μm - 20 μm - 50 μm
Bowl capacity	18 cm^3
Indicative oil drop rate	1 drop every 300/600 Nl
Oil type	FD22 - HG32
Bowl capacity	36 cm^3
Assembly positions	Vertical
Max. fitting torque (with Technopolymer threads)	G1/4" = 9 Nm
Max. fitting torque (with threaded inserts)	G1/8" = 15 Nm G1/4" = 20 Nm
Min. operational flow at 6,3 bar	40 Nl/min.

Ordering code

G V 171 C T S O D Z

V	VERSION
	N = Metal inserts
	T = Technopolymer thread
C	CONNECTIONS
	A = G1/8" (only for "N" version)
	B = G1/4"
	C = 1/4 NPT (only for "N" version)
T	TYPE
	N = Built in gauge
	P = G1/8" gauge connection
S	FILTER PORE SIZE ADJUSTING RANGE
	C = 5 μm / 0-8 bar
	D = 5 μm / 0-12 bar
	G = 20 μm / 0-8 bar
	H = 20 μm / 0-12 bar
	N = 50 μm / 0-8 bar
	P = 50 μm / 0-12 bar
O	OPTIONS
	= Standard *
	S = Automatic drain
D	FLOW DIRECTION
	= Standard (from left to right)
	W = from right to left
Z	BOWL OPTIONS
	= Standard *
	N = Nylon bowl

* no additional letter required

Service unit assembled (EM+PP+L) (E+PP+L) (EW+PP+L)

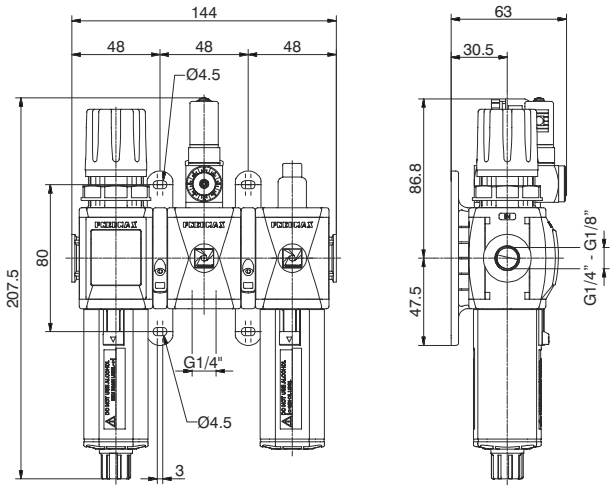

Example : GT171BRG : size 1 combined group comprising Filter-Regulator, Pressure switch and Lubricator Technopolymer threads, G1/4" connections 0 to 8 bar adjusting range and 20 μm filter pore size

Flow rate curves

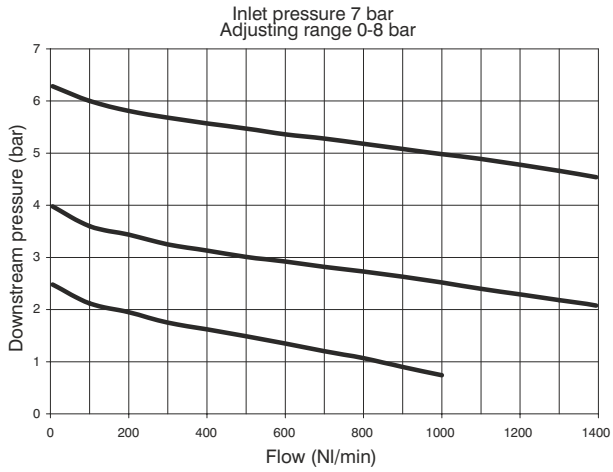

Adjustment characteristics

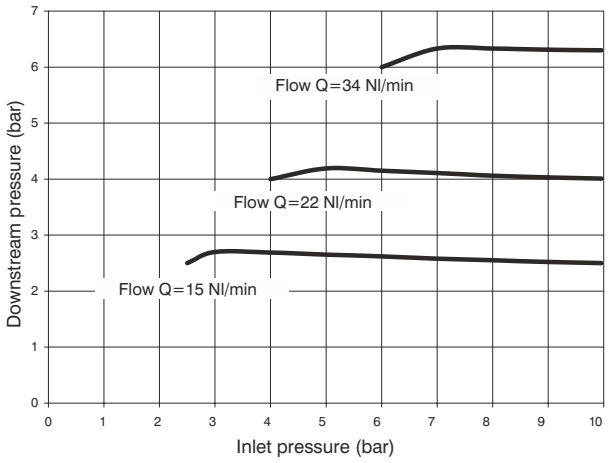

Operational characteristics

Combined group comprising Filter-regulator with built in manometer, Pressure switch and Lubricator assembled with two (Y) type coupling kits for panel mountings. Integrated manometer 0-12 bar as standard (for 0-8 and 0-12 bar range) and 0-4 bar (for 0-2 and 0-4 range)

Note

The pressure must be always regulating while increasing. For a more precise regulation and higher sensibility, the use of a regulator with a pressure range as close as possible to the regulated pressure is recommended.

Technical characteristics

Connections	G 1/8" - G 1/4"
Max. inlet pressure	13 bar
Working temperature	-5°C +50°C
Weight with Technopolymer threads	gr. 484
Weight with threaded inserts	gr. 504
Pressure range	0-2 bar / 0-4 bar 0-8 bar / 0-12 bar
Filter pore size	5 μm - 20 μm - 50 μm
Bowl capacity	18 cm^3
Indicative oil drop rate	1 drop every 300/600 Nl
Oil type	FD22 - HG32
Bowl capacity	36 cm^3
Assembly positions	Vertical
Max. fitting torque (with Technopolymer threads)	G1/4" = 9 Nm
Max. fitting torque (with threaded inserts)	G1/8" = 15 Nm G1/4" = 20 Nm
Min. operational flow at 6,3 bar	40 Nl/min.

Ordering code

G V 171 C T S O D Z

V	VERSION
	N = Metal inserts
	T = Technopolymer thread
C	CONNECTIONS
	A = G1/8" (only for "N" version)
	B = G1/4"
	C = 1/4 NPT (only for "N" version)
T	TYPE
	R = Built in gauge
	C = G1/8" gauge connection
S	FILTER PORE SIZE ADJUSTING RANGE
	C = 5 μm / 0-8 bar
	D = 5 μm / 0-12 bar
	G = 20 μm / 0-8 bar
	H = 20 μm / 0-12 bar
	N = 50 μm / 0-8 bar
	P = 50 μm / 0-12 bar
O	OPTIONS
	= Standard *
	S = Automatic drain
D	FLOW DIRECTION
	= Standard (from left to right)
	W = from right to left
Z	BOWL OPTIONS
	= Standard *
	N = Nylon bowl

* no additional letter required

Service unit assembled (VL+EM) (VL+E) (VL+EW)

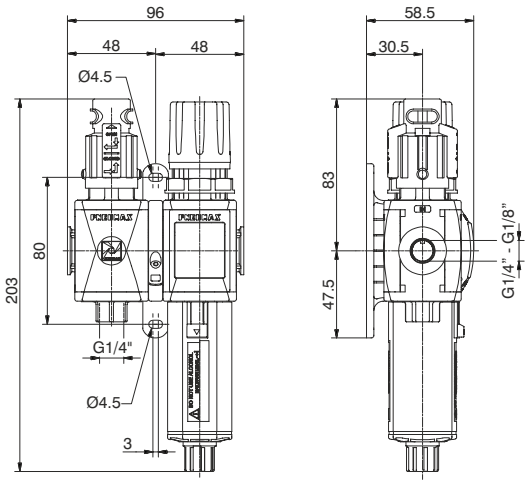

Example : GT171BVGG : size 1 combined group comprising Shut-off valve, Filter-regulator Technopolymer threads, G1/4" connections 0 to 8 bar adjusting range and 20 μm filter pore size

Flow rate curves

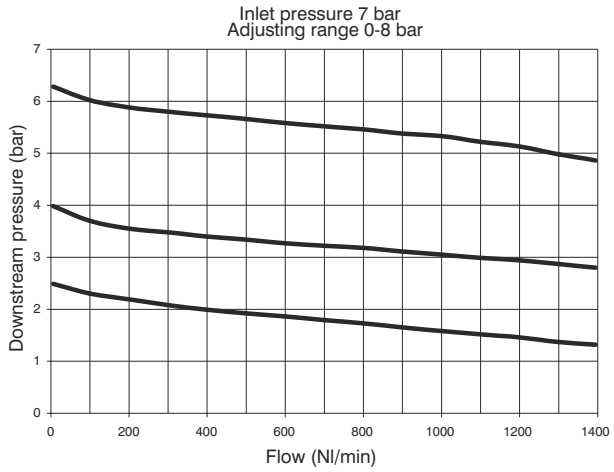

Adjustment characteristics

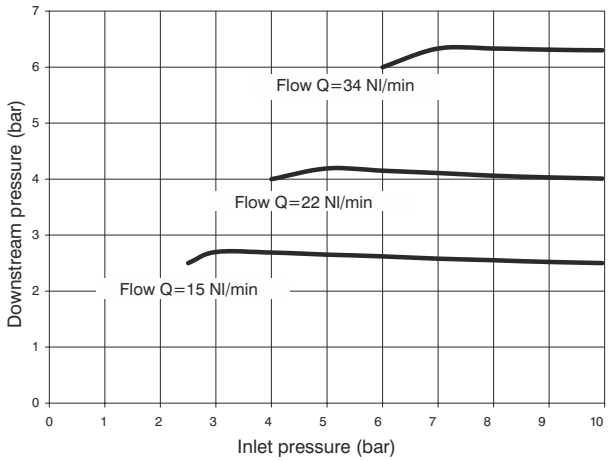

Operational characteristics

Combined group comprising manual shut-off valve, Filter - regulator with built in manometer, assembled with one (Y) type coupling kit for panel mountings.
Integrated manometer 0-12 bar as standard (for 0-8 and 0-12 bar range) and 0-4 bar (for 0-2 and 0-4 range)

Note

The pressure must be always regulating while increasing. For a more precise regulation and higher sensibility, the use of a regulator with a pressure range as close as possible to the regulated pressure is recommended.

Technical characteristics

Connections	G 1/8" - G 1/4"
Max. inlet pressure	13 bar
Working temperature	-5°C +50°C
Weight with Technopolymer threads	gr. 318
Weight with threaded inserts	gr. 338
Pressure range	0-2 bar / 0-4 bar 0-8 bar / 0-12 bar
Filter pore size	5 μm - 20 μm - 50 μm
Bowl capacity	18 cm^3
Indicative oil drop rate	1 drop every 300/600 Nl
Oil type	FD22 - HG32
Bowl capacity	36 cm^3
Assembly positions	Vertical
Max. fitting torque (with Technopolymer threads)	G1/4" = 9 Nm
Max. fitting torque (with threaded inserts)	G1/8" = 15 Nm G1/4" = 20 Nm
Min. operational flow at 6,3 bar	40 Nl/min.

Ordering code

G Ⓥ 171 Ⓒ Ⓣ Ⓢ Ⓞ Ⓓ Ⓩ

Ⓥ	VERSION
	N = Metal inserts
	T = Technopolymer thread
Ⓒ	CONNECTIONS
	A = G1/8" (only for "N" version)
	B = G1/4"
	C = 1/4 NPT (only for "N" version)
Ⓣ	TYPE
	VG = Built in gauge
	VU = G1/8" gauge connection
Ⓢ	FILTER PORE SIZE ADJUSTING RANGE
	C = 5 μm / 0-8 bar
	D = 5 μm / 0-12 bar
	G = 20 μm / 0-8 bar
	H = 20 μm / 0-12 bar
	N = 50 μm / 0-8 bar
	P = 50 μm / 0-12 bar
Ⓞ	OPTIONS
	= Standard *
	S = Automatic drain
Ⓓ	FLOW DIRECTION
	= Standard (from left to right)
	W = from right to left
Ⓩ	BOWL OPTIONS
	= Standard *
	N = Nylon bowl

* no additional letter required

Service unit assembled (VL+EM+L) (VL+E+L) (VL+EW+L)

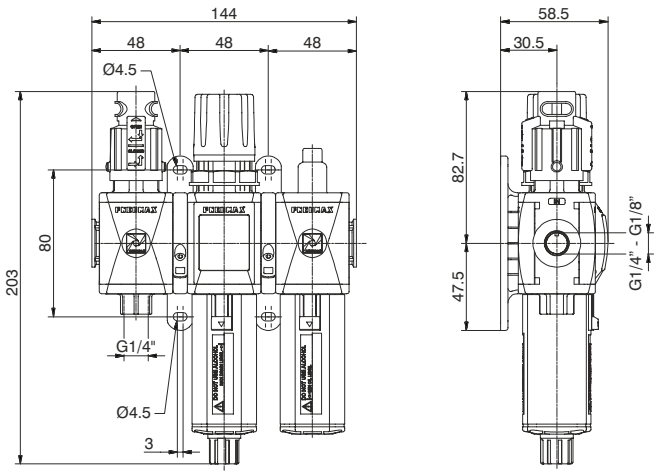

Example : GT171BVHG : size 1 combined group comprising Shut-off valve, Filter-regulator and Lubricator Technopolymer threads, G1/4" connections 0 to 8 bar adjusting range and 20 μm filter pore size

Flow rate curves

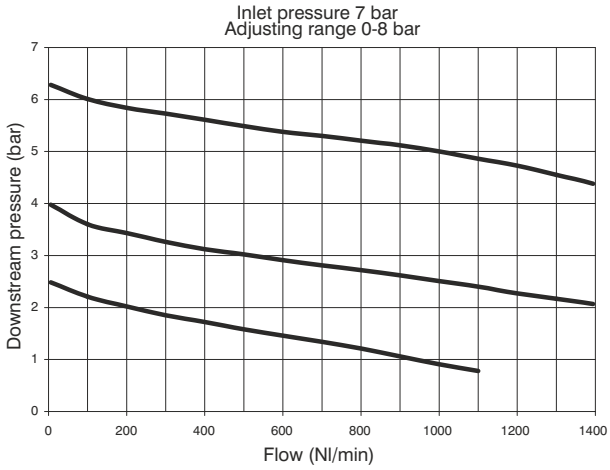

Adjustment characteristics

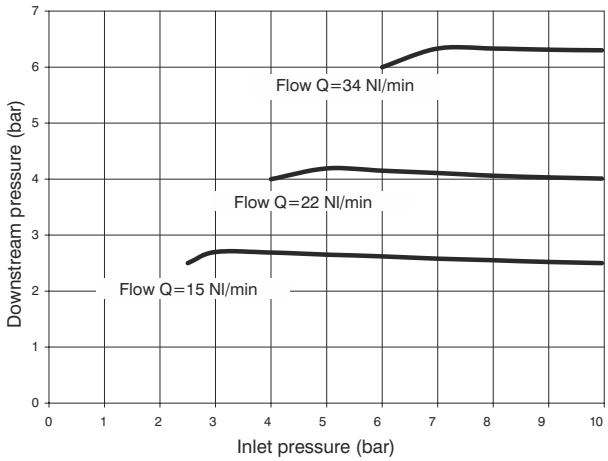

Operational characteristics

Combined group comprising manual shut-off valve, Filter - regulator with built in manometer and Lubricator assembled with two(Y) type coupling kits for panel mountings.
Integrated manometer 0-12 bar as standard
(for 0-8 and 0-12 bar range) and 0-4 bar (for 0-2 and 0-4 range)

Note

The pressure must be always regulating while increasing. For a more precise regulation and higher sensibility, the use of a regulator with a pressure range as close as possible to the regulated pressure is recommended.

Technical characteristics

Connections	G 1/8" - G 1/4"
Max. inlet pressure	13 bar
Working temperature	-5°C +50°C
Weight with Technopolymer threads	gr. 446
Weight with threaded inserts	gr. 476
Pressure range	0-2 bar / 0-4 bar 0-8 bar / 0-12 bar
Filter pore size	5 μm - 20 μm - 50 μm
Bowl capacity	18 cm^3
Indicative oil drop rate	1 drop every 300/600 Nl
Oil type	FD22 - HG32
Bowl capacity	36 cm^3
Assembly positions	Vertical
Max. fitting torque (with Technopolymer threads)	G1/4" = 9 Nm
Max. fitting torque (with threaded inserts)	G1/8" = 15 Nm G1/4" = 20 Nm
Min. operational flow at 6,3 bar	40 Nl/min.

Ordering code

GⓋ171ⒸⓉⓈⓄⒹⓏ

Ⓥ	VERSION
	N = Metal inserts
	T = Technopolymer thread
Ⓒ	CONNECTIONS
	A = G1/8" (only for "N" version)
	B = G1/4"
	C = 1/4 NPT (only for "N" version)
Ⓣ	TYPE
	VH = Built in gauge
	VJ = G1/8" gauge connection
Ⓢ	FILTER PORE SIZE ADJUSTING RANGE
	C = 5 μm / 0-8 bar
	D = 5 μm / 0-12 bar
	G = 20 μm / 0-8 bar
	H = 20 μm / 0-12 bar
	N = 50 μm / 0-8 bar
	P = 50 μm / 0-12 bar
Ⓞ	OPTIONS
	= Standard *
	S = Automatic drain
Ⓓ	FLOW DIRECTION
	= Standard (from left to right)
	W = from right to left
Ⓩ	BOWL OPTIONS
	= Standard *
	N = Nylon bowl

* no additional letter required

Service unit assembled (VL+F+RM+L) (VL+F+R+L) (VL+F+RW+L)

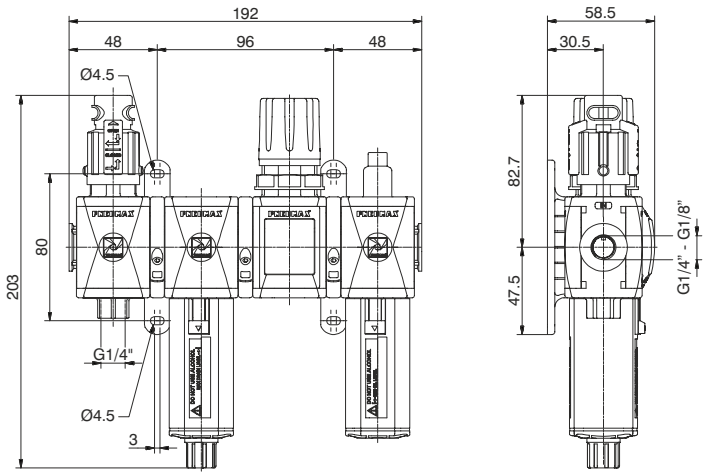

Example : GT171BVKG : size 1 combined group comprising Shut-off valve, Filter, Regulator and Lubricator Technopolymer threads, G1/4" connections 0 to 8 bar adjusting range and 20 μm filter pore size

Flow rate curves

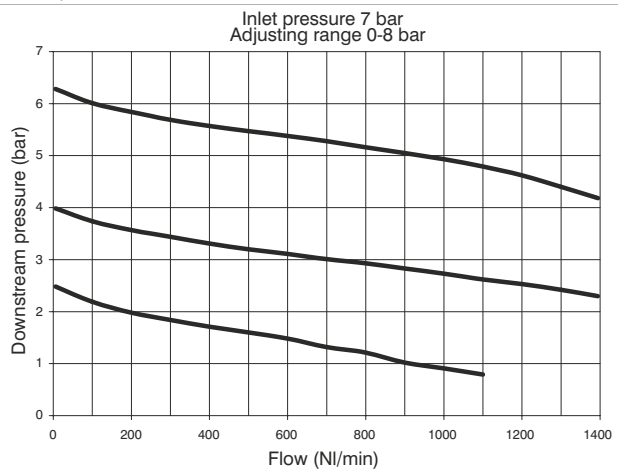

Adjustment characteristics

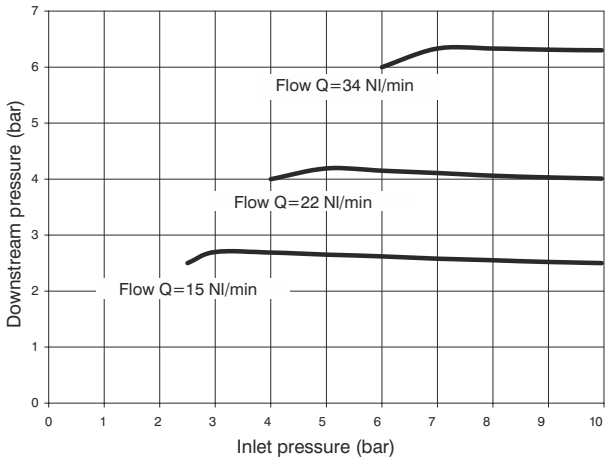

Operational characteristics

Combined group comprising manual shut - off valve, Filter, Regulator with built in manometer and Lubricator , assembled with two (Y) type coupling kits for panel mounting and one (X) type coupling kit.
Integrated manometer 0-12 bar as standard (for 0-8 and 0-12 bar range) and 0-4 bar (for 0-2 and 0-4 range)

Note

The pressure must be always regulating while increasing. For a more precise regulation and higher sensibility, the use of a regulator with a pressure range as close as possible to the regulated pressure is recommended.

Technical characteristics

Connections	G 1/8" - G 1/4"
Max. inlet pressure	13 bar
Working temperature	-5°C +50°C
Weight with Technopolymer threads	gr. 518
Weight with threaded inserts	gr. 558
Pressure range	0-2 bar / 0-4 bar 0-8 bar / 0-12 bar
Filter pore size	5 μm - 20 μm - 50 μm
Bowl capacity	18 cm^3
Indicative oil drop rate	1 drop every 300/600 Nl
Oil type	FD22 - HG32
Bowl capacity	36 cm^3
Assembly positions	Vertical
Max. fitting torque (with Technopolymer threads)	G1/4" = 9 Nm
Max. fitting torque (with threaded inserts)	G1/8" = 15 Nm G1/4" = 20 Nm
Min. operational flow at 6,3 bar	40 Nl/min.

Ordering code

G V 171 C T S O D Z

V	VERSION
	N = Metal inserts
	T = Technopolymer thread
C	CONNECTIONS
	A = G1/8" (only for "N" version)
	B = G1/4"
	C = 1/4 NPT (only for "N" version)
T	TYPE
	VK = Built in gauge
	VT = G1/8" gauge connection
S	FILTER PORE SIZE ADJUSTING RANGE
	C = 5 μm / 0-8 bar
	D = 5 μm / 0-12 bar
	G = 20 μm / 0-8 bar
	H = 20 μm / 0-12 bar
	N = 50 μm / 0-8 bar
	P = 50 μm / 0-12 bar
O	OPTIONS
	= Standard *
	S = Automatic drain
D	FLOW DIRECTION
	= Standard (from left to right)
	W = from right to left
Z	BOWL OPTIONS
	= Standard *
	N = Nylon bowl

* no additional letter required

Service unit assembled (VL+EM+PA+L) (VL+E+PA+L) (VL+EW+PA+L)

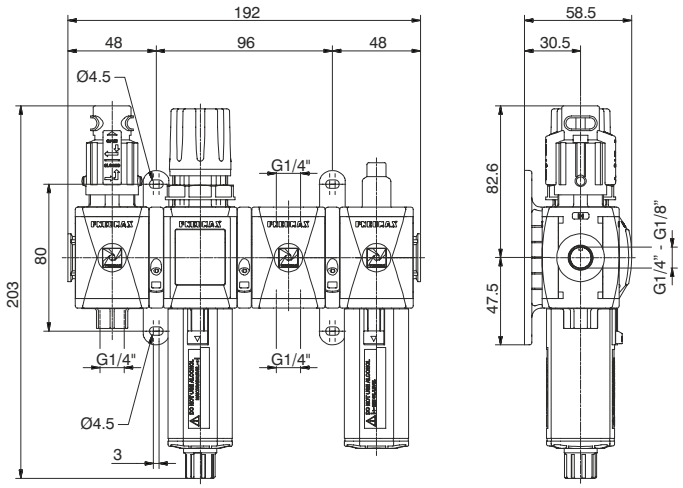

Example : GT171BVNG : size 1 combined group comprising Shut-off valve, Filter-regulator, Air intake and Lubricator Technopolymer threads, G1/4" connections 0 to 8 bar adjusting range and 20 μm filter pore size

Flow rate curves

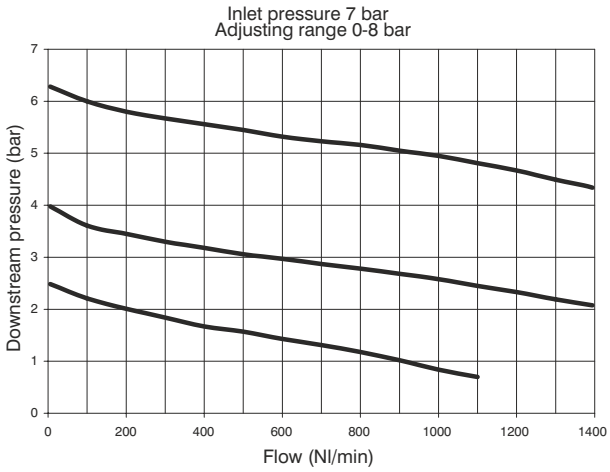

Adjustment characteristics

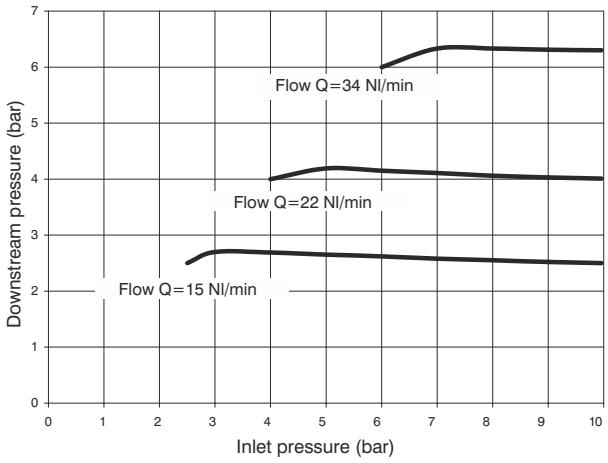

Operational characteristics

Combined group comprising manual shut-off valve, Filter - regulator with built in manometer, Air intake and Lubricator, assembled with two (Y) type coupling kits for panel mounting and one (X) type coupling kit.
Integrated manometer 0-12 bar as standard
(for 0-8 and 0-12 bar range) and 0-4 bar (for 0-2 and 0-4 range)

Note

The pressure must be always regulating while increasing. For a more precise regulation and higher sensibility, the use of a regulator with a pressure range as close as possible to the regulated pressure is recommended.

Technical characteristics

Connections	G 1/8" - G 1/4"
Max. inlet pressure	13 bar
Working temperature	-5°C +50°C
Weight with Technopolymer threads	gr. 510
Weight with threaded inserts	gr. 540
Pressure range	0-2 bar / 0-4 bar 0-8 bar / 0-12 bar
Filter pore size	5 μm - 20 μm - 50 μm
Bowl capacity	18 cm^3
Indicative oil drop rate	1 drop every 300/600 Nl
Oil type	FD22 - HG32
Bowl capacity	36 cm^3
Assembly positions	Vertical
Max. fitting torque (with Technopolymer threads)	G1/4" = 9 Nm
Max. fitting torque (with threaded inserts)	G1/8" = 15 Nm G1/4" = 20 Nm
Min. operational flow at 6,3 bar	40 Nl/min.

Ordering code

G Ⓥ 171 Ⓒ Ⓣ Ⓢ Ⓞ Ⓓ Ⓩ

Ⓥ	VERSION
	N = Metal inserts
	T = Technopolymer thread
Ⓒ	CONNECTIONS
	A = G1/8" (only for "N" version)
	B = G1/4"
	C = 1/4 NPT (only for "N" version)
Ⓣ	TYPE
	VN = Built in gauge
	VP = G1/8" gauge connection
Ⓢ	FILTER PORE SIZE ADJUSTING RANGE
	C = 5 μm / 0-8 bar
	D = 5 μm / 0-12 bar
	G = 20 μm / 0-8 bar
	H = 20 μm / 0-12 bar
	N = 50 μm / 0-8 bar
	P = 50 μm / 0-12 bar
Ⓞ	OPTIONS
	= Standard *
	S = Automatic drain
Ⓓ	FLOW DIRECTION
	= Standard (from left to right)
	W = from right to left
Ⓩ	BOWL OPTIONS
	= Standard *
	N = Nylon bowl

* no additional letter required

3

Service unit assembled (VL+EM+PP+L) (VL+E+PP+L) (VL+EW+PP+L)

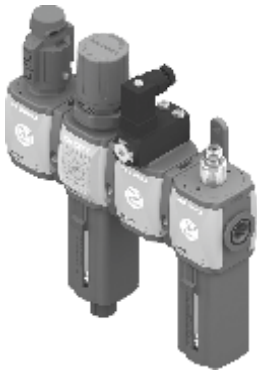

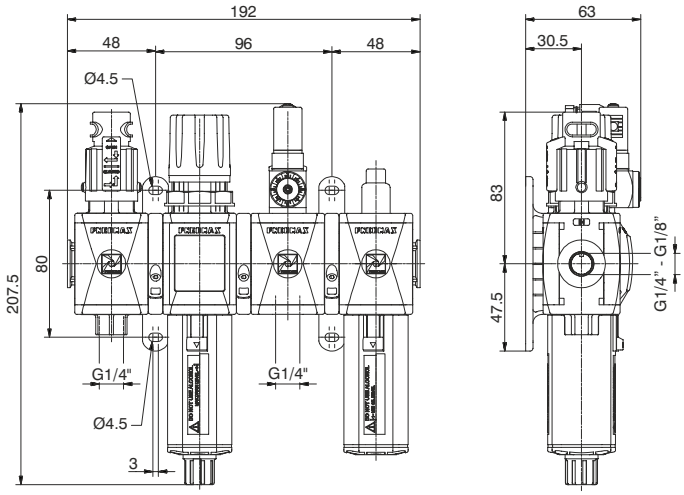

Example : GT171BVRG : size 1 combined group comprising Shut-off valve, Filter-regulator, Pressure switch and Lubricator Technopolymer threads, G1/4" connections adjusting range 0 to 8 bar and 20 μm filter pore size

Flow rate curves

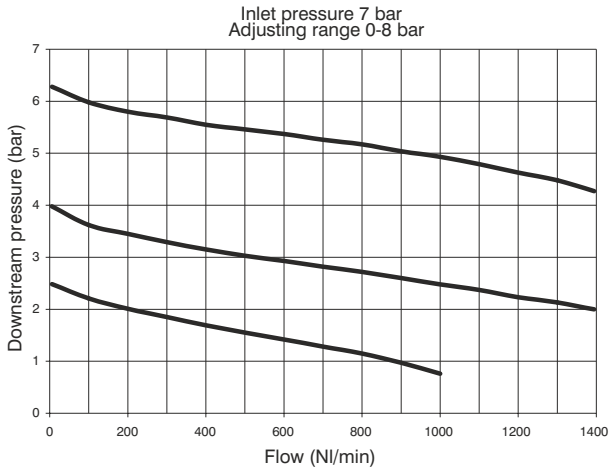

Adjustment characteristics

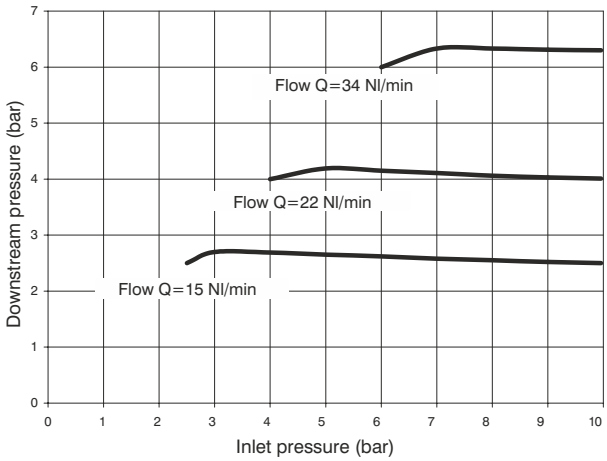

Operational characteristics

Combined group comprising manual shut-off valve, Filter - regulator with built in manometer, Pressure switch and Lubricator, assembled with two (Y) type coupling kits for panel mounting and one (X) type coupling kit.
Integrated manometer 0-12 bar as standard
(for 0-8 and 0-12 bar range) and 0-4 bar (for 0-2 and 0-4 range)

Note

The pressure must be always regulating while increasing. For a more precise regulation and higher sensibility, the use of a regulator with a pressure range as close as possible to the regulated pressure is recommended.

Technical characteristics

Connections	G 1/8" - G 1/4"
Max. inlet pressure	13 bar
Working temperature	-5°C +50°C
Weight with Technopolymer threads	gr. 596
Weight with threaded inserts	gr. 626
Pressure range	0-2 bar / 0-4 bar 0-8 bar / 0-12 bar
Filter pore size	5 μm - 20 μm - 50 μm
Bowl capacity	18 cm^3
Indicative oil drop rate	1 drop every 300/600 Nl
Oil type	FD22 - HG32
Bowl capacity	36 cm^3
Assembly positions	Vertical
Max. fitting torque (with Technopolymer threads)	G1/4" = 9 Nm
Max. fitting torque (with threaded inserts)	G1/8" = 15 Nm G1/4" = 20 Nm
Min. operational flow at 6,3 bar	40 Nl/min.

Ordering code

G V 171 C T S O D Z

V	VERSION
	N = Metal inserts
	T = Technopolymer thread
C	CONNECTIONS
	A = G1/8" (only for "N" version)
	B = G1/4"
	C = 1/4 NPT (only for "N" version)
T	TYPE
	VR = Built in gauge
	VC = G1/8" gauge connection
S	FILTER PORE SIZE ADJUSTING RANGE
	C = 5 μm / 0-8 bar
	D = 5 μm / 0-12 bar
	G = 20 μm / 0-8 bar
	H = 20 μm / 0-12 bar
	N = 50 μm / 0-8 bar
	P = 50 μm / 0-12 bar
O	OPTIONS
	= Standard *
	S = Automatic drain
D	FLOW DIRECTION
	= Standard (from left to right)
	W = from right to left
Z	BOWL OPTIONS
	= Standard *
	N = Nylon bowl

* no additional letter required

Service unit assembled (VE+AP)

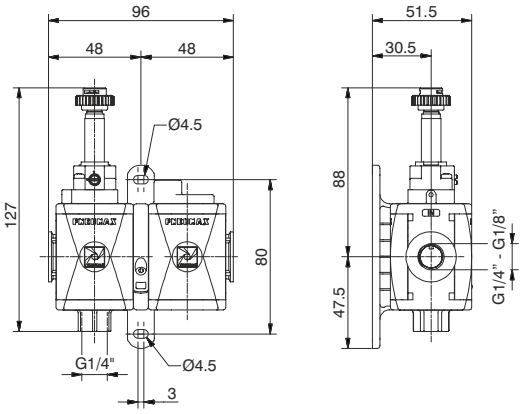

Example : GT171BSB2 : size 1 combined group comprising Electric shut-off valve, Progressive start-up valve without coil with M2 pilot Technopolymer threads, G1/4" connections

Operational characteristics

Combined group comprising Electric shut-off valve and Progressive start-up valve assembled with a (Y) type coupling kit for panel mounting.

Technical characteristics

Connections	G 1/8" - G 1/4"
Max. inlet pressure	10 bar
Min. inlet pressure	3 bar
Working temperature	-5°C +50°C
Weight with Technopolymer threads	gr. 218
Weight with threaded inserts	gr. 238
Assembly positions	Indifferent
Max. fitting torque (with Technopolymer threads)	G1/4" = 9 Nm
Max. fitting torque (with threaded inserts)	G1/8" = 15 Nm G1/4" = 20 Nm
Flow at 6 bar with Δp=1	1200 Nl/min.

Ordering code

G Ⓥ 171 Ⓒ S Ⓐ

Ⓥ	VERSION
	N = Metal inserts
	T = Technopolymer thread
Ⓒ	CONNECTIONS
	A = G1/8" (only for "N" version)
	B = G1/4"
	C = 1/4 NPT (only for "N" version)
Ⓐ	15 mm COIL VOLTAGE
	A4 = 12 V DC
	A5 = 24 V DC
	A6 = 24 V AC (50-60 Hz)
	A7 = 110 V AC (50-60 Hz)
	A8 = 230 V AC (50-60 Hz)
	A9 = 24 V DC (1 Watt)
	22 mm COIL VOLTAGE
	B2 = Without coil M2 mechanic
	B4 = 12 V DC
	B5 = 24 V DC
	B6 = 24 V AC (50-60 Hz)
	B7 = 110 V AC (50-60 Hz)
	B8 = 230 V AC (50-60 Hz)
	B9 = 24 V DC (2 Watt)
	30 mm COIL VOLTAGE
	C5 = 24 V DC
	C6 = 24 V AC (50-60 Hz)
	C7 = 110 V AC (50-60 Hz)
	C8 = 230 V AC (50-60 Hz)
	C9 = 24 V DC (2 Watt)

Construction and working characteristics

The new FRL units AIRPLUS series represents the evolution of the well known and consolidated 1700 series.
The main features are increased performances, reliability, easy and fast assembly and the introduction of the latest technical features.
With the exception of the air intake module and the pressure switch module all elements are available in two configurations: with technopolimer connections (IN and OUT) , (T series), or with metal threaded inserts , (N series). Bowls made of transparent polycarbonate (PC) are fitted with a bowl protection guard which is assembled on the body via a quick coupling mechanism provided with a safety button. The filter, available with three filtration grades (5μm, 20μm and 50μm) is fitted as standard with a drain mechanism which can be operated manually or semi-automatically. On request is available the auto-drain mechanism. The regulator is based on the rolling diaphragm technology with low hysteresis and the system is balanced. The unit can be fitted with integrated flush mounting pressure gauge (0 to 12 bar range). 4 pressure ranges are available going from 0 to 12 bar and the regulating knob can be blocked in position simply by pressing it down. A dedicated version is available for battery mounting , up to a maximum of 6 units. The lubricator is based on the Venturi principle and the oil quantity is regulated via the adjusting screw positioned don the transparent polycarbonate (PC) regulating dome which also ensure clear visibility of the oil flow and regulation. The oil suction pipe is fitted as standard with a sintered filter which ensures that any contaminant that should be present in the oil will reach the down stream circuit. Shoot off valve is available in two versions, one manually operated and one solenoid operated. In both cases the unit is fitted with a threaded connection for depressurising the downstream circuit. On the manually operated version, in the lock position, it is possible to fit up to three locks in order to prevent the accidental pressurization of the pneumatic circuit avoiding accidents or damages. The solenoid operated version is available with a 15mm or with a 22mm solenoid valve. The soft start valve ensure a progressive pressurization of the down stream circuit avoiding sudden pressure surges which could be dangerous for the devices fitted on the down stream circuit. The filling time can be easily adjusted via a built in flow regulator. The full flow rate is allowed only once the down stream pressure has reached 50% of the value of the inlet pressure. The pressure switch module which can be set between 2 and 10 bar and the air intake module complete the range.
The elements are joint together via dedicated quick coupling technopolimer flanges which allows for the units to be panel mounted moreover ensure the possibility to replace any component without disassembling the FRL group from its position.
90° mounting brackets and standard gauges are also available.

Instruction for installation and operation

The FRL unit must be installed as close as possible to the application. The air flow direction must follow the directions indicated on the single units in correspondence of the threaded connections.(IN and OUT)
Units provided with bowl must be mounted vertically with the bawl facing down. Single units or groups can be panel mounted via the Y type flanges, regulators and filter-regulators can be mounted via the 90° zinc plated steel bracket. In order to mount the 90° bracket it is necessary to remove the regulating knob and then the locking ring before positioning the bracket. All units must be operated according to the specified pressure and temperature ranges; fittings must be mounted without exciding the maximum torque allowed. Ensure that the units cover plates are in position before pressure is applied. The cover plates are needed to lock in position the top part of the unit.
The condense level in filer and filter-regulators bowls must never exceed the maximum level indicated on the bowls. With manual or semi automatic drain the condense can be discharged via a 6/4mm tube directly connected to the drain tap. On the pressure regulator the pressure value must always set wile pressure is rising and ideally the unit pressure range should be chosen based on the pressure value to be regulated.
Lubricators must be filled with class FD22 and HG32 oils. Ensure, both on the inlet and on the outlet , that the flow rate is above the minimum flow rate required to operate the unit. Below this value the units does not operate. The oil quantity can be regulated via the regulating screw on the transparent polycarbonate dome through which it is also clearly visible the oil flow. A drop every 300-600 litres should be allowed.
The oil can be re-filled while the pneumatic circuit is pressurized thanks to the exhaust valve which is built in the refill plug and allows for the bowl to be depressurized and the oil refill directly form in the bowl or from the plug. The manual shot off valve needs, to be operated, a push and turn action (clockwise) in order to close it and discharge the down stream circuit it is necessary to turn anti clock wise the knob. The soft start valve is used to slowly and progressively pressurize the down stream circuit, the time needed to do so can be set by means of the built in flow regulator.
The soft start valve on its own does not allow for the down stream circuit to be discharged, in order to do so it is necessary to combine it with a shot off valve (to be mounted upstream).

Maintenance

For any maintenance which requires the removal of the top plugs/ supports from the body it is necessary to preventively remove the sides cover plates. If the top plugs\supports are removed with the sides plates still in their position the unit could be permanently damaged.

Bowls , plugs and supports are assembled with a bayonet type mechanism. In order to remove them rotate anti clockwise until the mechanical stop is reached and than remove from the body (for the bowls firstly press down the green safety button). Bowls and transparent parts can be cleaned with water and neutral soap. Do not use solvents or alcohol.
Filtering elements (from filters and filter regulators) made of HDPE can be regenerated by washing and blowing them. In order to remove them it is necessary to remove the bowl unscrew the filter element and replace it with a new one or clean it. The oil can be re-filled while the pneumatic circuit is pressurized thanks to the exhaust valve which is built in the refill plug and allows for the bowl to be depressurized. In order to be able to un-mount the bowl it is necessary unscrew the refill plug positioned near the oil dome, once this operation has been carried out it is possible to remove the bowl to re fill it or to refill from the refill plug. Refilling directly the bowl is suggested.
Should the pressure regulator not perform properly or should present a constant leackage from the relieving replaced the diaphragm by unloading completely the regulating spring before removing the regulation support. Any other maintenance operation, in consideration of the complexity of the assembly, and the need of a through test according to the Pneumax spa specification, should be carried out by the manufacturer.

Fittings maximum recommended torque applicable

THREAD	Technopolymer version (T)	Metal version (N)
G1/8”	4 Nm	15 Nm
G1/4”	9 Nm	20 Nm
G3/8”	16 Nm	25 Nm
G1/2”	22 Nm	30 Nm

Filter (F)

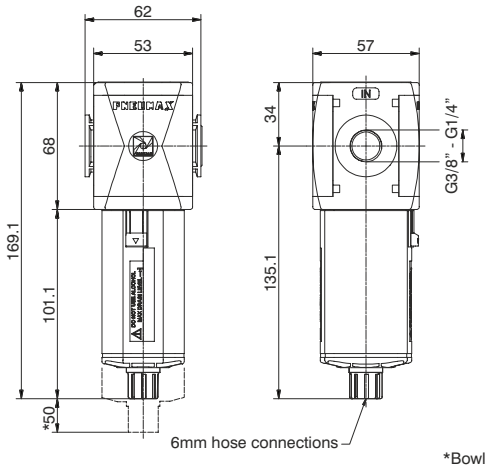

*Bowl removal maximum height

Example: T172BFB : size 2, Filter with Technopolymer threads, G3/8" connections, 20 μm filter pore size

Flow rate curves

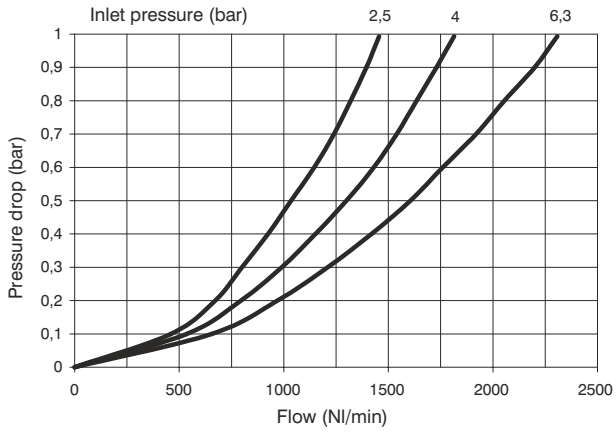

Operational characteristics

- Double filtering action: air flow centrifugation and filter element
- Filtering element made of HDPE (high density polyethylene) available in three different filtration grades (5μm, 20μm and 50μm) can be regenerated by washing it or replaced.
- Transparent bowl made off polycarbonate with bowl protection guard.
- Bowl assembly via bayonet type quick coupling mechanism with safety button.
- Semi-automatic drain mounted as standard; automatic drain upon request.

Note

In order to ensure adequate flow on the auto drain version it is recommended to use minimum a 6mm fitting.

Technical characteristics

Connections	G 1/4" - G 3/8"
Max. inlet pressure	13 bar
Minimum working pressure with automatic drain	0,5 bar
Maximum working pressure with automatic drain	10 bar
Working temperature	-5°C +50°C
Weight with Technopolymer threads	gr. 220
Weight with threaded inserts	gr. 230
Filter pore size	5 μm - 20 μm - 50 μm
Bowl capacity	34 cm^3
Assembly positions	Vertical
Max. fitting torque (with Technopolymer threads)	G3/8" = 16 Nm
Max. fitting torque (with threaded inserts)	G1/4" = 20 Nm G3/8" = 25 Nm

Ordering code

Ⓥ172ⒸFⓈⓄⓏ

Ⓥ	VERSION
	N = Metal inserts
	T = Technopolymer thread
Ⓒ	CONNECTIONS
	A = G1/4" (only for "N" version)
	B = G3/8"
	C = 3/8 NPT (only for "N" version)
Ⓢ	FILTER PORE SIZE
	A = 5 μm
	B = 20 μm
	C = 50 μm
Ⓞ	OPTIONS
	= Standard *
	S = Automatic drain
Ⓩ	BOWL OPTIONS
	= Standard *
	N = Nylon bowl

* no additional letter required

Coalescing filter (D)

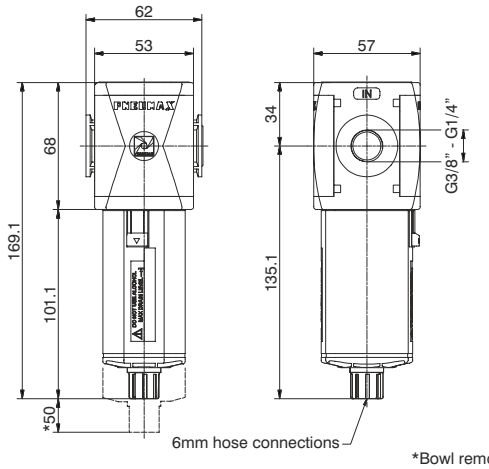

*Bowl removal maximum height

Example : T172BDA : Coalescing filter size 2, with Technopolymer threads, G3/8" connections, filter efficency 99,97%

Flow rate curves

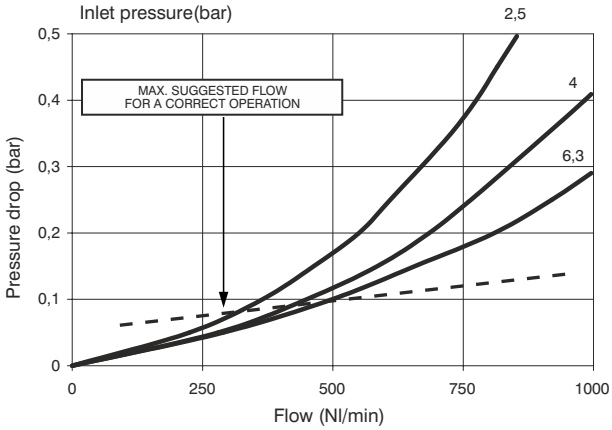

Operational characteristics

- Coelesing filter element with filtration grade of 0.01μm
- Transparent bowl made off polycarbonate with bowl protection guard.
- Bowl assembly via bayonet type quick coupling mechanism with safety button.
- Semi-automatic drain mounted as standard; automatic drain upon request.

Note

In order to ensure a better grade of filtration it is recommended to use a 5 μm filter before the coalescing filter. In order to ensure adequate flow on the auto drain version it is recommended to use minimum a 6mm fitting.

Technical characteristics

Connections	G 1/4" - G 3/8"
Max. inlet pressure	13 bar
Minimum working pressure with automatic drain	0,5 bar
Maximum working pressure with automatic drain	10 bar
Working temperature	-5°C +50°C
Weight with Technopolymer threads	gr. 225
Weight with threaded inserts	gr. 235
Filter efficiency with 0,01 μm particle	99,97%
Bowl capacity	34 cm^3
Assembly positions	Vertical
Max. fitting torque (with Technopolymer threads)	G3/8" = 16 Nm
Max. fitting torque (with threaded inserts)	G1/4" = 20 Nm G3/8" = 25 Nm

Ordering code

Ⓥ172ⒸDⒺⓄⓏ

Ⓥ	VERSION
	N = Metal inserts
	T = Technopolymer thread
Ⓒ	CONNECTIONS
	A = G1/4"(only for "N" version)
	B = G3/8"
	C = 3/8 NPT(only for "N" version)
Ⓔ	FILTER EFFICIENCY
	A = 99,97%
Ⓞ	OPTIONS
	= Standard *
	S = Automatic drain
Ⓩ	BOWL OPTIONS
	= Standard *
	N = Nylon bowl

* no additional letter required

Regulator (R)

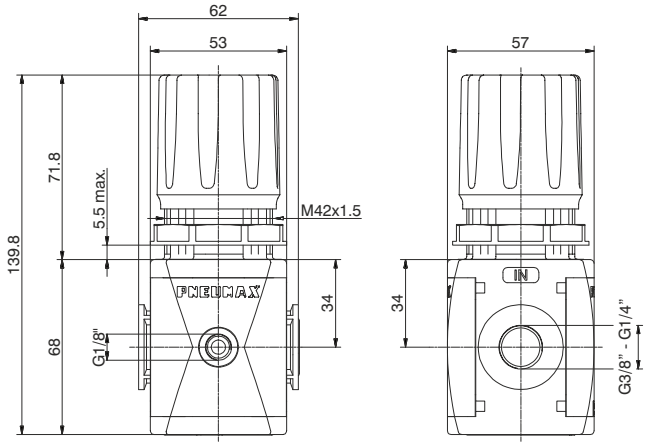

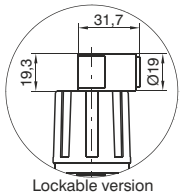

Lockable version
Detail

Example: T172BRC : size 2, Regulator with Technopolymer threads, G3/8" connections, 0 to 8 bar adjusting range

Flow rate curves

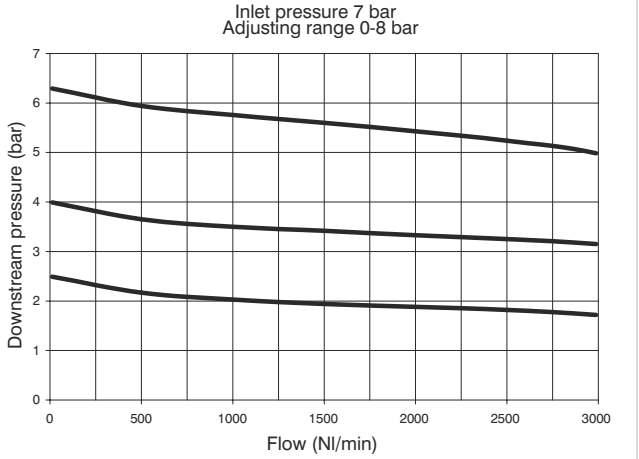

Adjustment characteristics

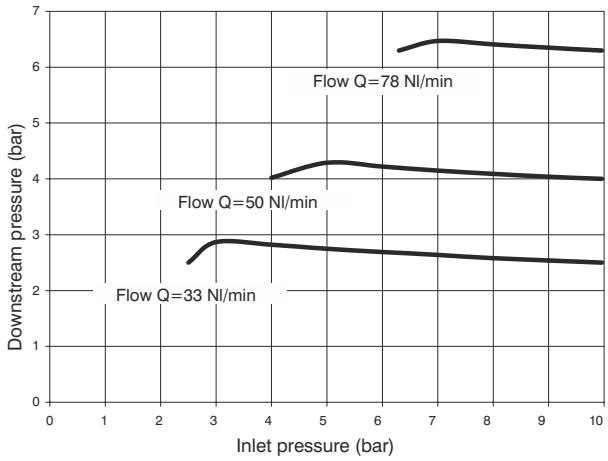

Operational characteristics

- Diaphragm pressure regulator with relieving.
- Low hysteresis rolling diaphragm.
- Balanced system.
- Available in four pressure ranges up to 12 bar.
- Operating knob can be locked in position by pressing it down once the desired P2 (regulated pressure) pressure value is achieved.
- Fitted with panel mounting locking ring.

Note

The pressure must be always regulating while increasing. For a more precise regulation and higher sensibility, the use of a regulator with a pressure range as close as possible to the regulated pressure is recommended.

Technical characteristics

Connections	G 1/4" - G 3/8"
Max. inlet pressure	13 bar
Working temperature	-5°C +50°C
Pressure gauge connections	G 1/8"
Weight with Technopolymer threads	gr. 300
Weight with threaded inserts	gr. 310
Pressure range	0-2 bar / 0-4 bar 0-8 bar / 0-12 bar
Assembly positions	Indifferent
Max. fitting torque (with Technopolymer threads)	G1/8" = 4 Nm G3/8" = 16 Nm
Max. fitting torque (with threaded inserts)	G1/4" = 20 Nm G3/8" = 25 Nm

Ordering code

Ⓥ172ⒸⒼ⒯⒪

Ⓥ	VERSION N = Metal inserts T = Technopolymer thread
Ⓒ	CONNECTIONS A = G1/4" (only for "N" version) B = G3/8" C = 3/8 NPT (only for "N" version)
Ⓖ	ADJUSTING RANGE A = 0-2 bar B = 0-4 bar C = 0-8 bar D = 0-12 bar
Ⓣ	TYPE = Standard * F = Controlled refiel + improved relieving L = no relieving R = Improved relieving
Ⓞ	OPTIONS = Standard * K = Lockable version

* no additional letter required

Regulator including gauge (RM)(RW)

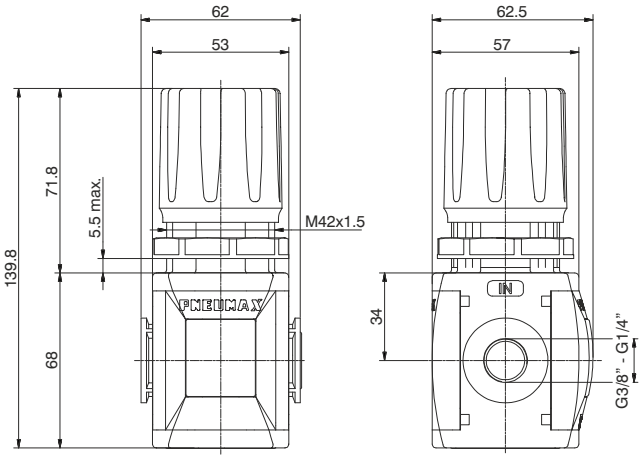

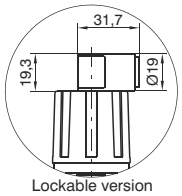

Lockable version
Detail

Example : T172BRMC : size 2, Regulator including gauge with Technopolymer threads, G3/8" connections, 0 to 8 bar adjusting range

Flow rate curves

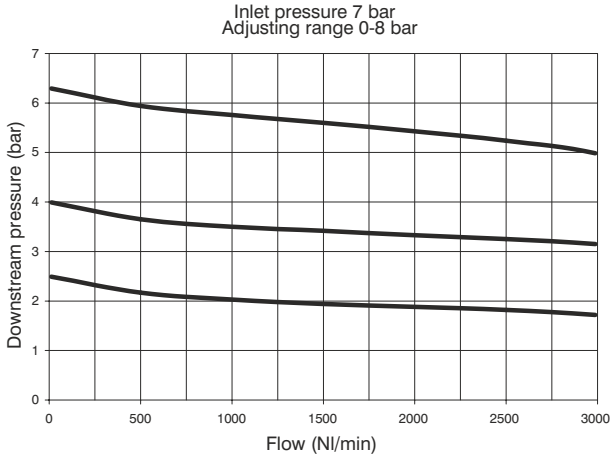

Adjustment characteristics

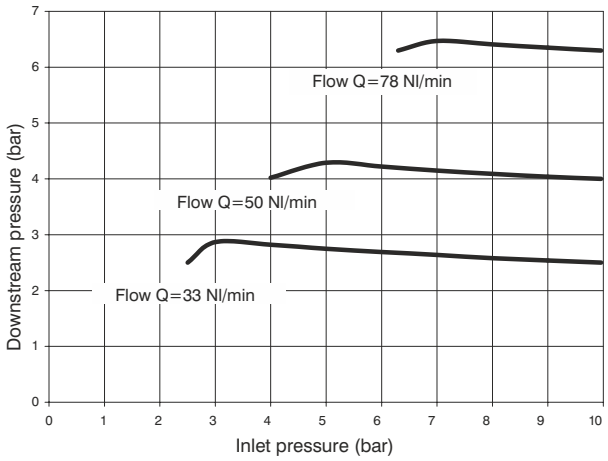

Operational characteristics

- Diaphragm pressure regulator with relieving.
- Low hysteresis rolling diaphragm.
- Balanced system.
- Available in four pressure ranges up to 12 bar.
- Operating knob can be locked in position by pressing it down once the desired P2 (regulated pressure) pressure value is achieved.
- Fitted with panel mounting locking ring.
- Integrated manometer 0-12 bar as standard (for 0-8 and 0-12 bar range) and 0-4 bar (for 0-2 and 0-4 range)

Note

The pressure must be always regulating while increasing. For a more precise regulation and higher sensibility, the use of a regulator with a pressure range as close as possible to the regulated pressure is recommended.

Technical characteristics

Connections	G 1/4" - G 3/8"
Max. inlet pressure	13 bar
Working temperature	-5°C +50°C
Weight with Technopolymer threads	gr. 300
Weight with threaded inserts	gr. 310
Pressure range	0-2 bar / 0-4 bar 0-8 bar / 0-12 bar
Assembly positions	Indifferent
Max. fitting torque (with Technopolymer threads)	G3/8" = 16 Nm
Max. fitting torque (with threaded inserts)	G1/4" = 20 Nm G3/8" = 25 Nm

Ordering code

Ⓥ172ⒸⒹⒼ⒯⓪

Ⓥ	VERSION
	N = Metal inserts
	T = Technopolymer thread
Ⓒ	CONNECTIONS
	A = G1/4"(only for "N" version)
	B = G3/8"
	C = 3/8 NPT(only for "N" version)
Ⓓ	FLOW DIRECTION
	M = from left to right
	W = from right to left
Ⓖ	ADJUSTING RANGE
	A = 0-2 bar
	B = 0-4 bar
	C = 0-8 bar
	D = 0-12 bar
Ⓣ	TYPE
	= Standard *
	F = Controlled refiel + improved relieving
	L = no relieving
	R = Improved relieving
⓪	OPTIONS
	= Standard *
	K = Lockable version

* no additional letter required

3

Filter-Regulator (E)

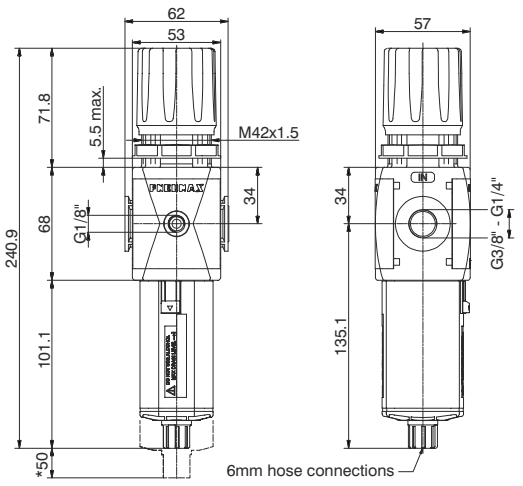

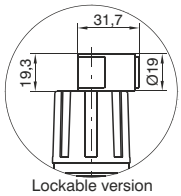

Lockable version
Detail

*Bowl removal maximum height

Example : T172BEBC : size 2, Filter-regulator with Technopolymer threads, G3/8" connections, 20 μm filtering pore size, 0 to 8 bar adjusting range

Flow rate curves

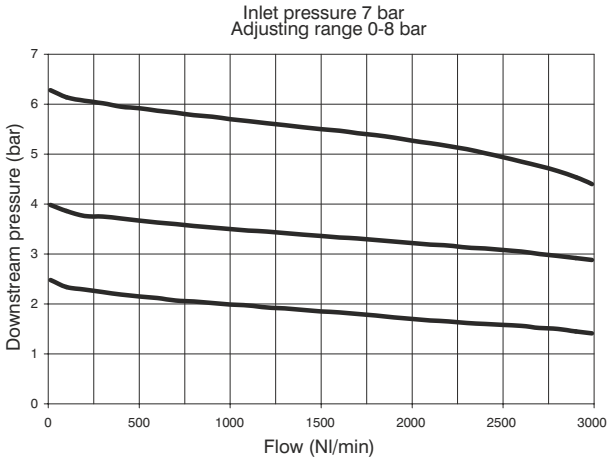

Adjustment characteristics

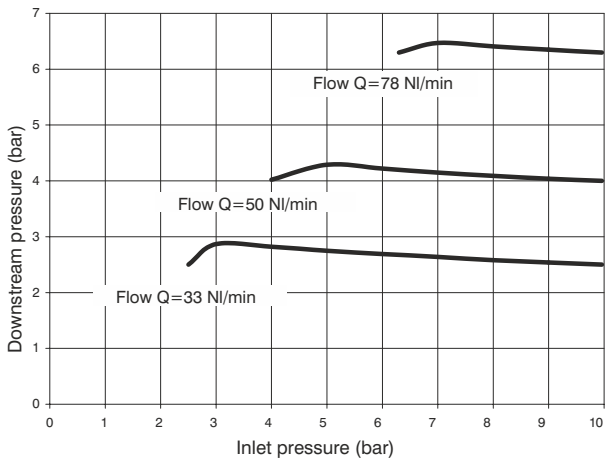

Operational characteristics

- Filter - diaphragm pressure regulator with relieving.
- Low hysteresis rolling diaphragm.
- Balanced system.
- Double filtering action: air flow centrifugation and filter element.
- Filtering element made of HDPE (high density polyethylene) available in three different filtration grades (5μm, 20μm and 50μm) can be regenerated by washing it or replaced.
- Transparent bowl made off polycarbonate with bowl protection guard.
- Bowl assembly via bayonet type quick coupling mechanism with safety button.
- Semi-automatic drain mounted as standard; automatic drain upon request.
- Available in four pressure ranges up to 12 bar.
- Operating knob can be locked in position by pressing it down once the desired P2 (regulated pressure) pressure value is achieved.
- Fitted with panel mounting locking ring.

Note

The pressure must be always regulating while increasing. For a more precise regulation and higher sensibility, the use of a regulator with a pressure range as close as possible to the regulated pressure is recommended. In order to ensure adequate flow on the auto drain version it is recommended to use minimum a 6mm fitting.

Technical characteristics

Connections	G 1/4" - G 3/8"
Max. inlet pressure	13 bar
Minimum working pressure with automatic drain	0,5 bar
Maximum working pressure with automatic drain	10 bar
Working temperature	-5°C +50°C
Pressure gauge connections	G 1/8"
Weight with Technopolymer threads	gr. 390
Weight with threaded inserts	gr. 400
Pressure range	0-2 bar / 0-4 bar 0-8 bar / 0-12 bar
Filter pore size	5 μm - 20 μm - 50 μm
Bowl capacity	34 cm^3
Assembly positions	Vertical
Max. fitting torque (with Technopolymer threads)	G1/8" = 4 Nm G3/8" = 16 Nm
Max. fitting torque (with threaded inserts)	G1/4" = 20 Nm G3/8" = 25 Nm

Ordering code

V172CESGTOZ

V	VERSION
	N = Metal inserts
	T = Technopolymer thread
C	CONNECTIONS
	A = G1/4" (only for "N" version)
	B = G3/8"
	C = 3/8 NPT (only for "N" version)
S	FILTER PORE SIZE
	A = 5 μm
	B = 20 μm
	C = 50 μm
G	ADJUSTING RANGE
	A = 0-2 bar
	B = 0-4 bar
	C = 0-8 bar
	D = 0-12 bar
T	TYPE
	= Standard *
	S = Automatic drain
O	OPTIONS
	= Standard *
	K = Lockable version
Z	BOWL OPTIONS
	= Standard *
	N = Nylon bowl

* no additional letter required

Filter-regulator including gauge (EM)(EW)

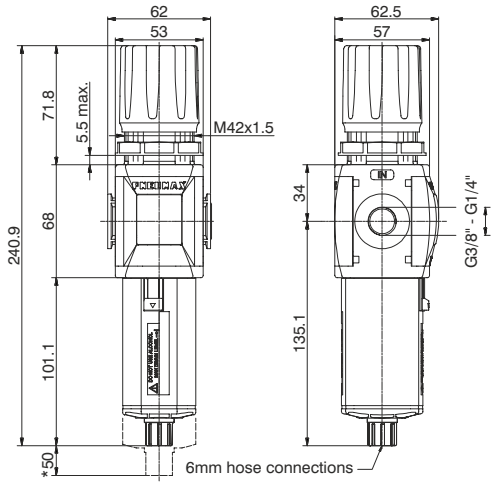

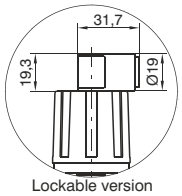

Lockable version
Detail

Example: T172BEMBC : size 2, Filter-Regulator including gauge with Technopolymer threads, G3/8" connections, with 20 μm filtering pore size, 0 to 8 bar adjusting range

Flow rate curves

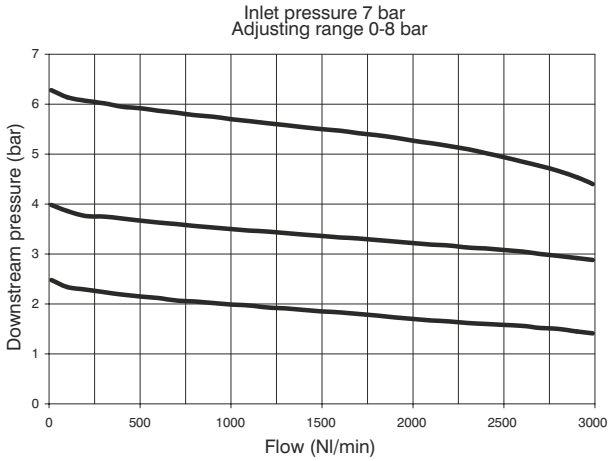

Adjustment characteristics

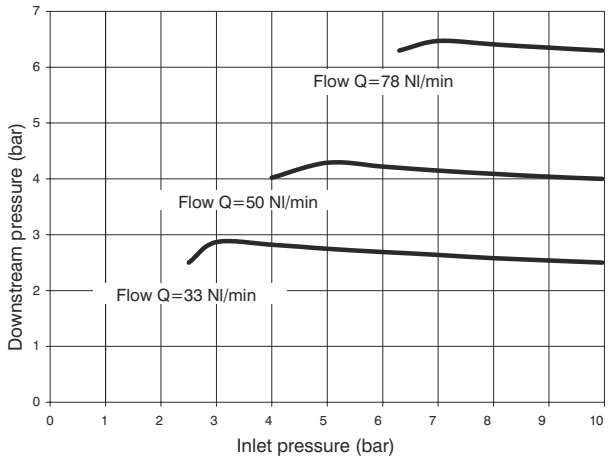

Operational characteristics

- Filter - diaphragm pressure regulator with relieving.
- Low hysteresis rolling diaphragm.
- Balanced system.
- Double filtering action: air flow centrifugation and filter element.
- Filtering element made of HDPE (high density polyethylene) available in three different filtration grades (5μm, 20μm and 50μm) can be regenerated by washing it or replaced.
- Transparent bowl made of polycarbonate with bowl protection guard.
- Bowl assembly via bayonet type quick coupling mechanism with safety button.
- Semi-automatic drain mounted as standard; automatic drain upon request.
- Available in four pressure ranges up to 12 bar.
- Operating knob can be locked in position by pressing it down once the desired P2 (regulated pressure) pressure value is achieved.
- Fitted with panel mounting locking ring.
- Integrated manometer 0-12 bar as standard (for 0-8 and 0-12 bar range) and 0-4 bar (for 0-2 and 0-4 range)

Note

The pressure must be always regulating while increasing. For a more precise regulation and higher sensibility, the use of a regulator with a pressure range as close as possible to the regulated pressure is recommended. In order to ensure adequate flow on the auto drain version it is recommended to use minimum a 6mm fitting.

Technical characteristics

Connections	G 1/4" - G 3/8"
Max. inlet pressure	13 bar
Minimum working pressure with automatic drain	0,5 bar
Maximum working pressure with automatic drain	10 bar
Working temperature	-5°C +50°C
Weight with Technopolymer threads	gr. 400
Weight with threaded inserts	gr. 410
Pressure range	0-2 bar / 0-4 bar 0-8 bar / 0-12 bar
Filter pore size	5 μm - 20 μm - 50 μm
Bowl capacity	34 cm^3
Assembly positions	Vertical
Max. fitting torque (with Technopolymer threads)	G3/8" = 16 Nm
Max. fitting torque (with threaded inserts)	G1/4" = 20 Nm G3/8" = 25 Nm

Ordering code

V172CEDSGTOZ

V	VERSION
	N = Metal inserts
	T = Technopolymer thread
C	CONNECTIONS
	A = G1/4"(only for "N" version)
	B = G3/8"
	C = 3/8 NPT(only for "N" version)
D	FLOW DIRECTION
	M = from left to right
	W = from right to left
S	FILTER PORE SIZE
	A = 5 μm
	B = 20 μm
	C = 50 μm
G	ADJUSTING RANGE
	A = 0-2 bar
	B = 0-4 bar
	C = 0-8 bar
	D = 0-12 bar
T	TYPE
	= Standard *
	S = Automatic drain
O	OPTIONS
	= Standard *
	K = Lockable version
Z	BOWL OPTIONS
	= Standard *
	N = Nylon bowl

* no additional letter required

Regulator with pressure switch (RP)(RZ)

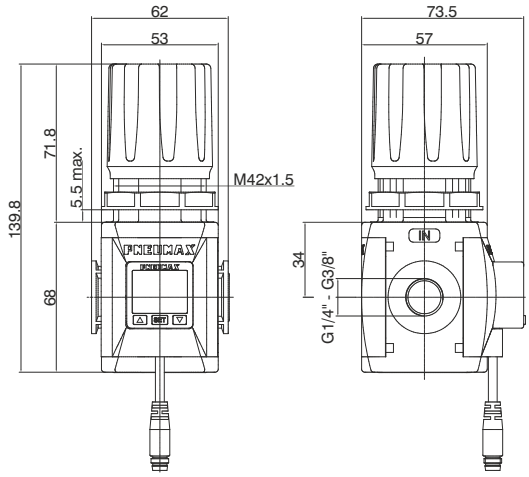

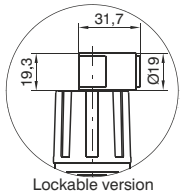

Lockable version
Detail

Example : T172BRPCA : size 2, Regulator with Technopolymer threads, G3/8" connections, 0 to 8 bar adjusting range, with pressure switch with M8 connector PNP

Flow rate curves

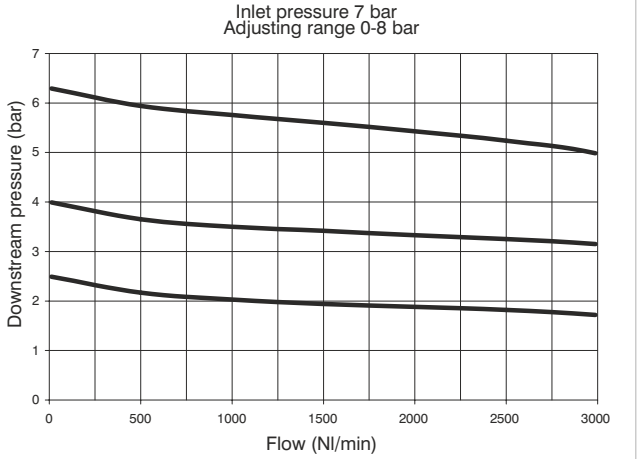

Adjustment characteristics

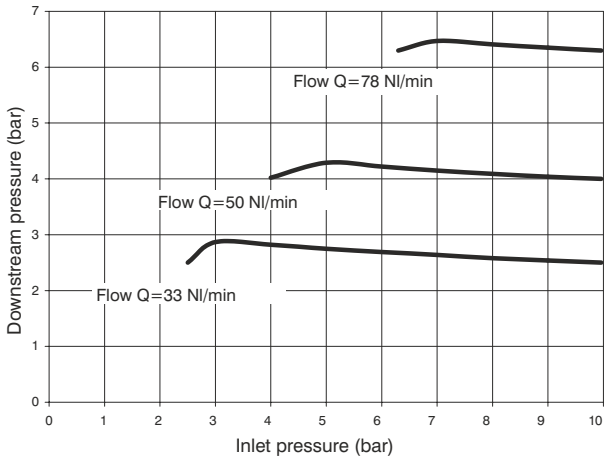

Operational characteristics

- Diaphragm pressure regulator with relieving.
- Low hysteresis rolling diaphragm.
- Balanced system.
- Available in four pressure ranges up to 12 bar.
- Operating knob can be locked in position by pressing it down once the desired P2 (regulated pressure) pressure value is achieved.
- Fitted with panel mounting locking ring.
- Pressure switch as standard

Note

The pressure must be always regulating while increasing. For a more precise regulation and higher sensibility, the use of a regulator with a pressure range as close as possible to the regulated pressure is recommended.

Technical characteristics

Connections	G 1/4" - G 3/8"
Max. inlet pressure	13 bar
Working temperature	0°C +50°C
Weight with Technopolymer threads	gr. 300
Weight with threaded inserts	gr. 310
Pressure range	0-2 bar / 0-4 bar 0-8 bar / 0-12 bar
Assembly positions	Indifferent
Max. fitting torque (with Technopolymer threads)	G3/8" = 16 Nm
Max. fitting torque (with threaded inserts)	G1/4" = 20 Nm G3/8" = 25 Nm

Ordering code

V172CRDGTOP

V	VERSION
	N = Metal inserts
	T = Technopolymer thread
C	CONNECTIONS
	A = G1/4" (only for "N" version)
	B = G3/8"
	C = 3/8 NPT (only for "N" version)
D	FLOW DIRECTION
	P = from left to right
	Z = from right to left
G	ADJUSTING RANGE
	A = 0-2 bar
	B = 0-4 bar
	C = 0-8 bar
	D = 0-12 bar
T	TYPE
	= Standard *
	F = Controlled refiel + improved relieving
	L = no relieving
	R = Improved relieving
O	OPTIONS
	= Standard *
	K = Lockable version
P	PRESSURE SWITCH OPTION
	A = Cable 150 mm+M8 PNP
	B = Cable 150 mm+M8 NPN
	C = Cable 2 mt. PNP
	D = Cable 2 mt. NPN

* no additional letter required

Filter regulator with pressure switch (EP)(EZ)

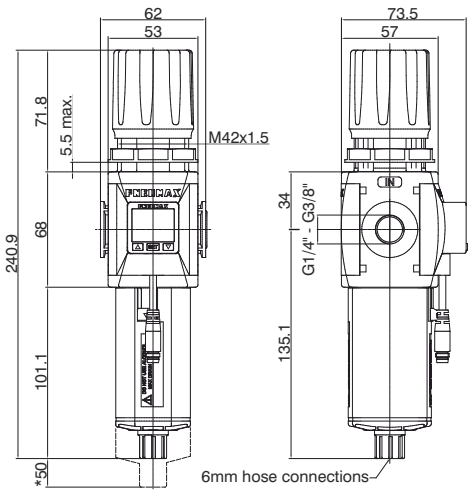

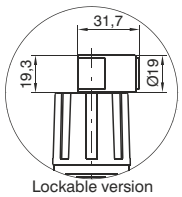

Lockable version
Detail

* Bowl removal maximum height

Example: T172BEPBCA : size 2, Filter-regulator with Technopolymer threads, G3/8" connections, 20 μm filtering pore size, 0 to 8 bar adjusting range, with pressure switch with M8 connector PNP

Flow rate curves

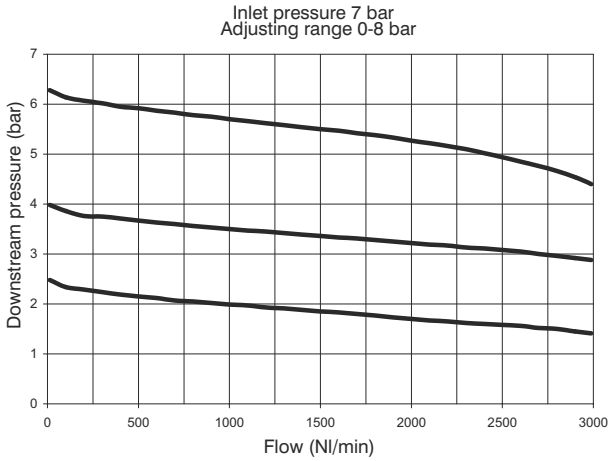

Adjustment characteristics

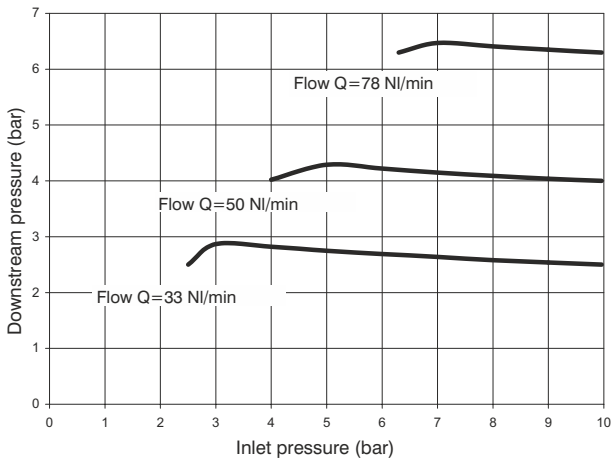

Operational characteristics

- Filter - diaphragm pressure regulator with relieving.
- Low hysteresis rolling diaphragm.
- Balanced system.
- Double filtering action: air flow centrifugation and filter element.
- Filtering element made of HDPE (high density polyethylene) available in three different filtration grades (5μm, 20μm and 50μm) can be regenerated by washing it or replaced.
- Transparent bowl made off polycarbonate with bowl protection guard.
- Bowl assembly via bayonet type quick coupling mechanism with safety button.
- Semi-automatic drain mounted as standard; automatic drain upon request
- Available in four pressure ranges up to 12 bar.
- Operating knob can be locked in position by pressing it down once the desired P2 (regulated pressure) pressure value is achieved.
- Fitted with panel mounting locking ring.
- Pressure switch as standard

Note

The pressure must be always regulating while increasing. For a more precise regulation and higher sensibility, the use of a regulator with a pressure range as close as possible to the regulated pressure is recommended. In order to ensure adequate flow on the auto drain version it is recommended to use minimum a 6mm fitting.

Technical characteristics

Connections	G 1/4" - G 3/8"
Max. inlet pressure	13 bar
Minimum working pressure with automatic drain	0,5 bar
Maximum working pressure with automatic drain	10 bar
Working temperature	0°C +50°C
Weight with Technopolymer threads	gr. 400
Weight with threaded inserts	gr. 410
Pressure range	0-2 bar / 0-4 bar 0-8 bar / 0-12 bar
Filter pore size	5 μm - 20 μm - 50 μm
Bowl capacity	34 cm^3
Assembly positions	Vertical
Max. fitting torque (with Technopolymer threads)	G3/8" = 16 Nm
Max. fitting torque (with threaded inserts)	G1/4" = 20 Nm G3/8" = 25 Nm

Ordering code

V172CEDSGTOPZ

V	VERSION
	N = Metal inserts
	T = Technopolymer thread
C	CONNECTION
	A = G1/4"(only for "N" version)
	B = G3/8"
	C = 3/8 NPT(only for "N" version)
D	FLOW DIRECTION
	P = from left to right
	Z = from right to left
S	FILTER PORE SIZE
	A = 5 μm
	B = 20 μm
	C = 50 μm
G	ADJUSTING RANGE
	A = 0-2 bar
	B = 0-4 bar
	C = 0-8 bar
	D = 0-12 bar
T	TYPE
	= Standard *
	S = Automatic drain
O	OPTIONS
	= Standard *
	K = Lockable version
P	PRESSURE SWITCH OPTION
	A = Cable 150 mm+M8 PNP
	B = Cable 150 mm+M8 NPN
	C = Cable 2 mt. PNP
	D = Cable 2 mt. NPN
Z	BOWL OPTIONS
	= Standard *
	N = Nylon bowl

* no additional letter required

CHARACTERISTICS

- 3 color digital LCD display, easy readout
- 4 units of measurement for pressure indication
- PNP and NPN output
- N.O. and N.C. output contact
- Not available individually, but only with a Regulator or a Filter-regulator

OUTPUT CIRCUIT WIRING DIAGRAMS

PNP output

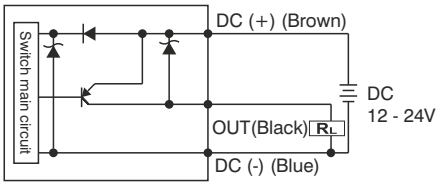

NPN output

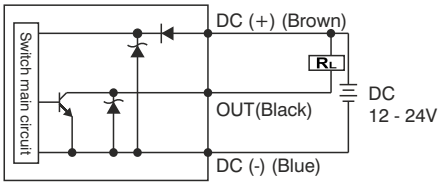

M8 CONNECTOR PIN LAY OUT

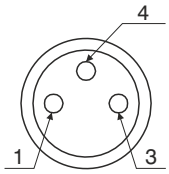

1 : (+)
3 : (-)
4 : (OUT)

3 WIRES CABLE LAY OUT

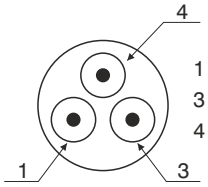

1 : Brown (+)
3 : Blue (-)
4 : Black (OUT)

Cable ordering code

MCH1	cable 3 wires l=2,5m with M8 connector
MCH2	cable 3 wires l=5m with M8 connector
MCH3	cable 3 wires l=10m with M8 connector

Connector

TECHNICAL CHARACTERISTICS	
Adjusting range	0 - 10 bar / 0 - 1MPa
Max. inlet pressure	15 bar / 1,5 MPa
Fluid	Filtered and dehumidified air
Display unit of measurement	MPa - kgf/cm² - bar - psi
Supply voltage	12 - 24 VDC
Current consumption	≤40mA (without load)
Digital output type	NPN - PNP
Type of contact	Normally Open - Normally Closed
Max. load current	125 mA
Digital output activation mode	single threshold with fixed hysteresis - window with fixed hysteresis - window without hysteresis
Digital output activation time	0.05s - 0.25s - 0.5s - 1s - 2s - 3s (selections for chattering-proof function)
Display characteristics	Double 3 1/2 digit display Digital output status indication Three-pushbuttons touchpad
Indicator accuracy	≤±2% F.S. ± 1 digit
Protection grade	IP 40
Temperature	0 - 50 °C
Cable section	3 x 0,129mm², Ø4 mm, PVC

Lubricator (L)

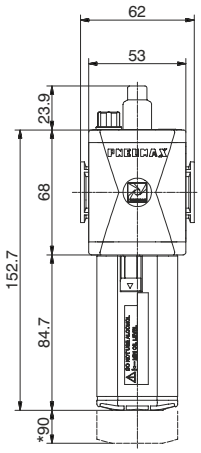

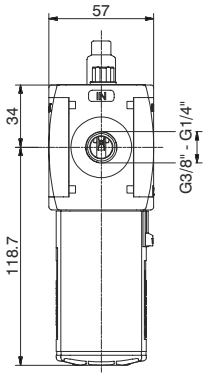

*Bowl removal maximum height

Example : T172BL : size 2, Lubricator with Technopolymer threads, G3/8" connections

Flow rate curves

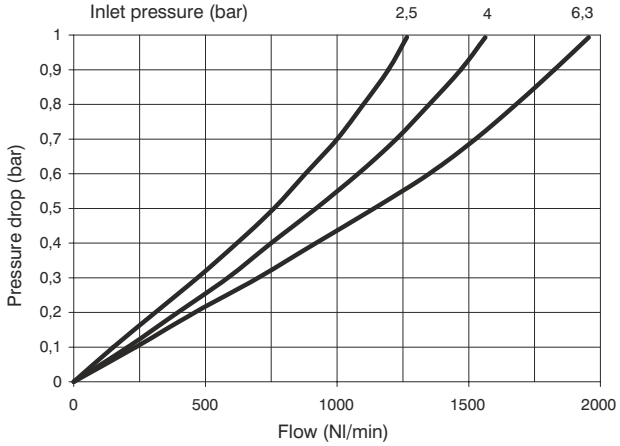

Operational characteristics

- Oil mist lubrication with variable orifice size in function of the flow rate
- Oil quantity regulation mechanism and oil quantity visualization dome made of polycarbonate.
- Transparent bowl made off polycarbonate with bowl protection guard.
- Bowl assembly via bayonet type quick coupling mechanism with safety button.
- Oil filling plug
- Oil can be refilled with pressurized circuit.
- Available with electric min-level sensor N.O. or N.C. with connection for connector.
- For electrical connection use connectors type C1-C2-C3 (see sensors chapter in the catalogue).

Note

Install as close as possible to the point o fuse
Do not use alcohol, deterging oils or solvents.

Technical characteristics

Connections	G 1/4" - G 3/8"
Max. inlet pressure	13 bar
Working temperature	-5°C +50°C
Weight with Technopolymer threads	gr. 210
Weight with threaded inserts	gr. 220
Indicative oil drop rate	1 drop every 300/600 Nl
Oil type	FD22 - HG32
Bowl capacity	70 cm^3
Assembly positions	Vertical
Max. fitting torque (with Technopolymer threads)	G3/8" = 16 Nm
Max. fitting torque (with threaded inserts)	G1/4" = 20 Nm G3/8" = 25 Nm
Min. operational flow at 6,3 bar	70 Nl/min.

Ordering code

Ⓥ172ⒸLⓄⓏ

Ⓥ	VERSION
	N = Metal inserts
	T = Technopolymer thread
Ⓒ	CONNECTIONS
	A = G1/4"(only for "N" version)
	B = G3/8"
	C = 3/8 NPT(only for "N" version)
Ⓞ	OPTIONS
	A = Min. Oil level indicator Normally open
	C = Min. Oil level indicator Normally closed
Ⓩ	BOWL OPTIONS
	= Standard *
	N = Nylon bowl

* no additional letter required

3

Shut-off valve (VL)

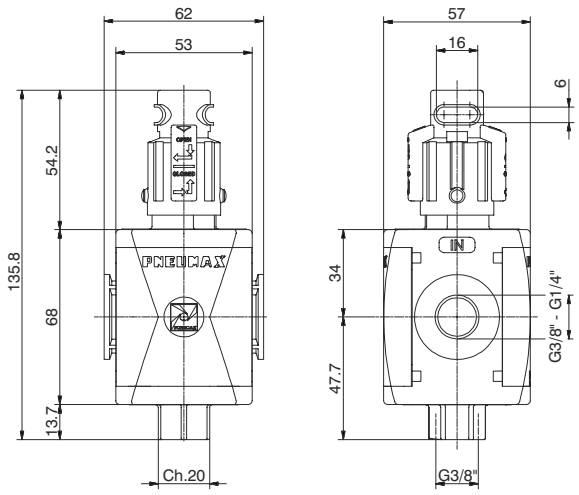

Example: T172BVL : size 2, Shut-off valve with Technopolymer threads, G3/8" connections

Operational characteristics

- Manual operated 3 ways poppet valve.
- Double handle action for valve opening: pushing and rotating (clockwise).
- The valve can be closed and the down stream circuit depressurized by rotating anticlockwise the knob.
- Knob lockable with three padlocks.

Technical characteristics

Connections	G 1/4” - G 3/8”
Max. inlet pressure	13 bar
Discharge connection	G3/8"
Working temperature	-5°C ÷ +50°C
Weight with Technopolymer threads	gr. 180
Weight with threaded inserts	gr. 190
Assembly positions	Indifferent
Handle opening and closing angle	90°
Max. fitting torque (with Technopolymer threads)	G3/8" = 16 Nm
Max. fitting torque (with threaded inserts)	G1/4" = 20 Nm G3/8" = 25 Nm
Nominal flow rate at 6 bar with Δp=1	2200 Nl/min.
Exhaust nominal flow rate at 6 bar with Δp=1	1500 Nl/min.

Ordering code

Ⓥ172ⒸVL

Ⓥ	VERSION
	N = Metal inserts
	T = Technopolymer thread
Ⓒ	CONNECTIONS
	A = G1/4"(only for "N" version)
	B = G3/8"
	C = 3/8 NPT(only for "N" version)

3

Pneumatic shut-off valve (VP)

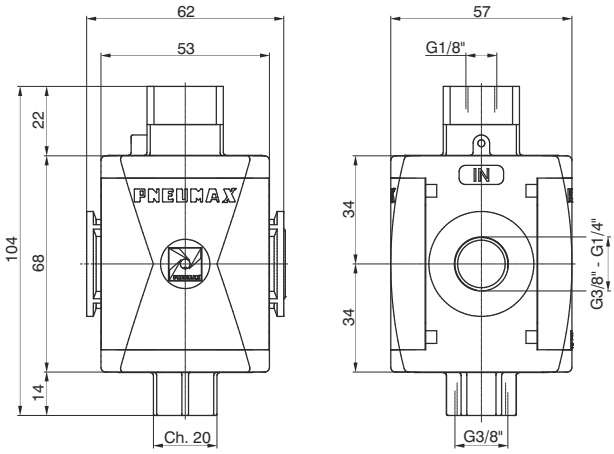

Example: T172BVP : size 2, Pneumatic shut-off valve with Technopolymer threads, G3/8" connections

Operational characteristics

- Pneumatic operated 3 ways poppet valve.
- When the pneumatic signal is removed the valves exhaust the pneumatic circuit

Technical characteristics

Connections	G 1/4” - G 3/8”
Discharge connection	G3/8"
Pilot port size	G1/8"
Working temperature	-5°C +50°C
Weight with technopolymer threads	gr. 173
Weight with threaded inserts	gr. 181
Assembly positions	Indifferent
Min. pressure working	2,5 bar
Max. pressure working	10 bar
Max. fitting torque (with Technopolymer threads)	G3/8" = 16 Nm
Max. fitting torque (with threaded inserts)	G1/4" = 20 Nm G3/8" = 25 Nm
Nominal flow rate at 6 bar with Δp=1	2200 Nl/min.
Exhaust nominal flow rate at 6 bar with Δp=1	1500 Nl/min.

Ordering code

Ⓥ172ⒸVP

Ⓥ	VERSION
	N = Metal inserts
	T = Technopolymer thread
Ⓒ	CONNECTIONS
	A = G1/4"(only for "N" version)
	B = G3/8"
	C = 3/8 NPT(only for "N" version)

3

Electric shut-off valve (VE)

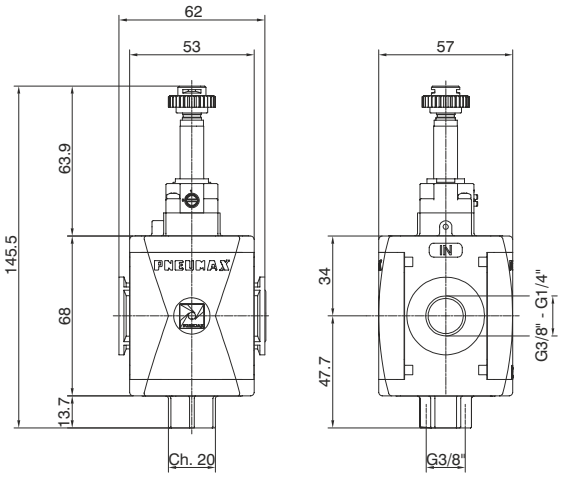

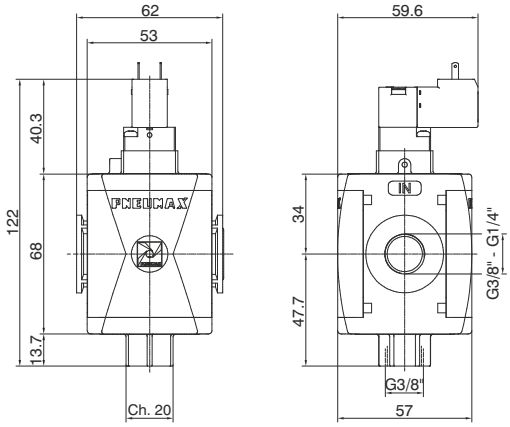

Example : T172BVEB2 : size 2, Electric shut-off valve, with M2 Pilot without coil, Technopolymer threads, G3/8" connections

Operational characteristics

- Solenoid operated 3 ways poppet valve.
- The model fitted with 15 mm pilots uses pilots series N33_0A and N33_0E (1 Watt)

Technical characteristics

Supply and operating connections	G 1/4" - G 3/8"
Discharge connections	G 3/8"
Working temperature	-5°C +50°C
Weight with Technopolymer threads	200 g
Weight with threaded inserts	210 g
Assembly positions	Indifferent
Min. Pressure working	2,5 bar
Max. Pressure working	10 bar
Max. fitting torque (with Technopolymer threads)	G3/8"= 16 Nm
Max. fitting torque (with threaded inserts)	G1/4" = 20 Nm G3/8" = 25 Nm
Nominal flow rate at 6 bar with Δp=1	2200 Nl/min.
Exhaust nominal flow rate at 6 bar with Δp=1	1500 Nl/min.

Ordering code

Ⓥ172ⒸVEⒶ

Ⓥ	VERSION
	N = Metal inserts
	T = Technopolymer thread
Ⓒ	CONNECTIONS
	A = G1/4"(only for "N" version)
	B = G3/8"
	C = 3/8 NPT(only for "N" version)
Ⓐ	15 mm COIL VOLTAGE
	A4 = 12 V DC
	A5 = 24 V DC
	A6 = 24 V AC (50-60 Hz)
	A7 = 110 V AC (50-60 Hz)
	A8 = 230 V AC (50-60 Hz)
	A9 = 24 V DC (1 Watt)
	22 mm COIL VOLTAGE
	B2 = Without coil M2 mechanic
	B4 = 12 V DC
	B5 = 24 V DC
	B6 = 24 V AC (50-60 Hz)
	B7 = 110 V AC (50-60 Hz)
	B8 = 230 V AC (50-60 Hz)
	B9 = 24 V DC (2 Watt)
	30 mm COIL VOLTAGE
	C5 = 24 V DC
	C6 = 24 V AC (50-60 Hz)
	C7 = 110 V AC (50-60 Hz)
	C8 = 230 V AC (50-60 Hz)
	C9 = 24 V DC (2 Watt)

Progressive start-up valve (AP)

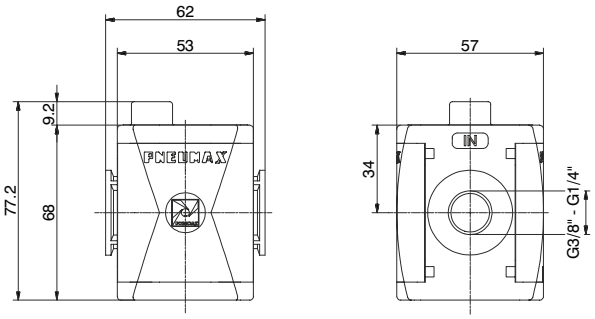

Example : T172BAP : size 2, Progressive start-up valve with Technopolymer threads, G3/8" connections

Operational characteristics

- Down stream circuit filling time regulated via a built in flow regulator.
- Full pressure is allowed once the down stream circuit pressure reaches 50% of the inlet pressure.

Technical characteristics

Connections	G 1/4" - G 3/8"
Max. inlet pressure	13 bar
Working temperature	-5°C +50°C
Weight with Technopolymer threads	gr. 140
Weight with threaded inserts	gr. 150
Max. fitting torque (with Technopolymer threads)	G3/8" = 16 Nm
Max. fitting torque (with threaded inserts)	G1/4" = 20 Nm G3/8" = 25 Nm
Assembly positions	Indifferent
Min. pressure working	2,5 bar
Nominal flow rate at 6 bar with Δp=1	2200 Nl/min.
Fully open built in flow regulator flow rate	200 Nl/min.

Ordering code

Ⓥ172ⒸAP

Ⓥ	VERSION N = Metal inserts T = Technopolymer thread
Ⓒ	CONNECTIONS A = G1/4"(only for "N" version) B = G3/8" C = 3/8 NPT(only for "N" version)

Air intake (PA)

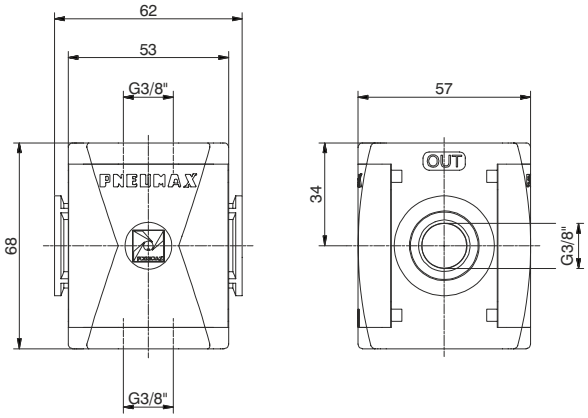

Example : T172BPA : size 2, Air intake with Technopolymer threads, G3/8" connections

Operational characteristics

- Available with two G3/8" threaded connections.

Attention
For this product are available only Technopolymer connections

Technical characteristics

Connections	G 3/8"
Max. inlet pressure	13 bar
Working temperature	-5°C +50°C
Weight	gr. 95,5
Assembly positions	Indifferent
Max. fitting torque (with Technopolymer threads)	G3/8" = 16 Nm

Ordering code

T172BPA

3

Pressure switch (PP)

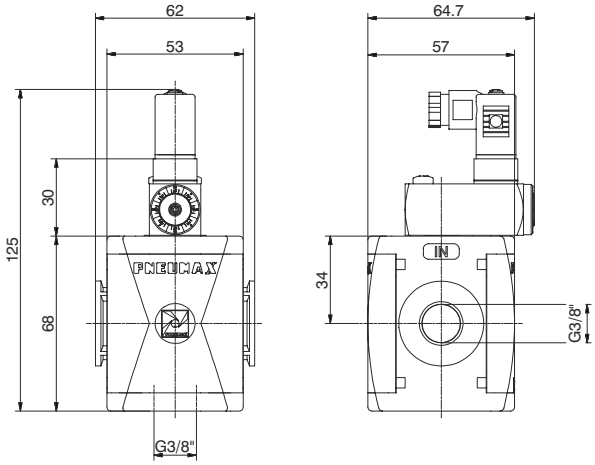

Example: T172BPP : Size 2, Pressure switch with Technopolymer threads, G3/8" connections

Operational characteristics

- Built in adjustable pressure switch (2 to 10 bar) with electrical connection.
- G 3/8" threaded connection on the bottom face.
- The electrical connection is made by mean of a 15 mm connector DIN 43650 type C. The microswitch contact could be normally closed or open (change overswitch).

Attenction
For this product are available only Technopolymer connections

Technical characteristics

		Ordering code
Connections	G 3/8"	
Max. inlet pressure	13 bar	**T172BPP**
Working temperature	-5°C +50°C	
Weight	gr. 179	
Microswitch capacity	1A	
Grade of protection (with connector assembled)	IP 65	
Adjusting range	2 -10 bar	
Assembly positions	Indifferent	
Max. fitting torque (with Technopolymer threads)	G3/8" = 16 Nm	
Microswitch maximum tension	250 VAC	

Connection

1 = neutral
2 = N.C. contact
3 = N.O. contact

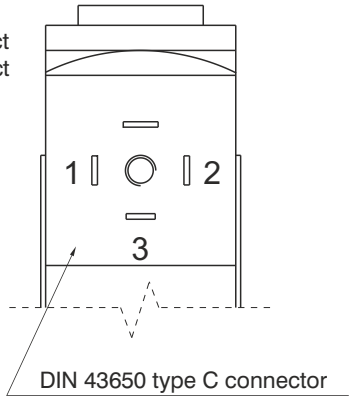

Flange X

Ordering code
T172X

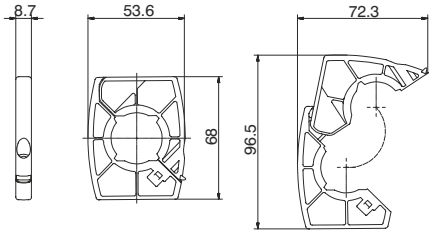

Weight 21 gr.
Example : T172X : Size 2 coupling flange
- Enables the quick connnection of two functions.

Flange Y

Ordering code
T172Y

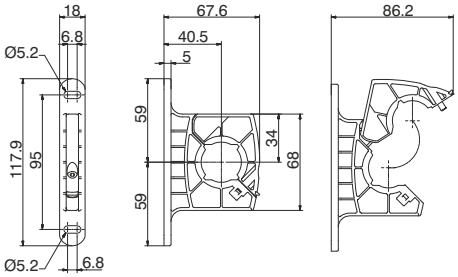

Weight 33 gr.
Example : T172Y : Size 2 coupling flange with mounting holes
- Used to couple together two elements and to panel mount them.
- Used to panel mount one single element.

Single unit panel mounting dimensions

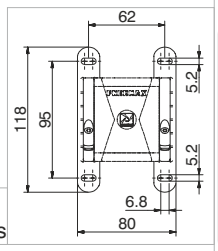

Aluminium flange Y

Ordering code
N172Y

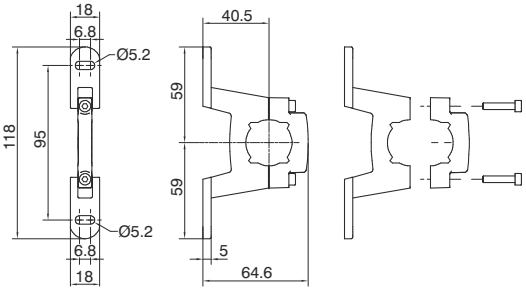

Weight 54 gr.
Example : N172Y : Size 2 coupling aluminium flange with mounting holes
- Used to couple together two elements and to panel mount them.
- Used to panel mount one single element.

Single unit panel mounting dimensions

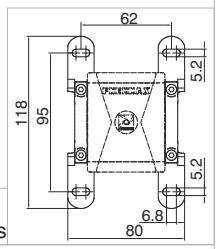

Fixing bracket

Ordering code
T17250

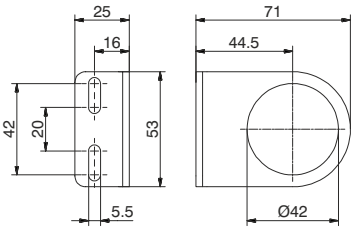

Weight 71 gr.
- Allows for regulators and filter regulators to be panel mounted.

Pressure gauge

Ordering code
17070Ⓥ.Ⓢ

Ⓥ	VERSION
	A = Dial Ø40
	B = Dial Ø50
Ⓢ	SCALE
	A = Scale 0-4 bar
	B = Scale 0-6 bar
	C = Scale 0-12 bar

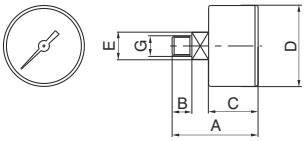

DIMENSIONS

CODE	A	B	C	D	E	G	Weight gr.
17070A	44	10	26	41	14	1/8"	60
17070B	45	10	27	49	14	1/8"	80

3

Service unit assembled (EM+L) (E+L) (EW+L)

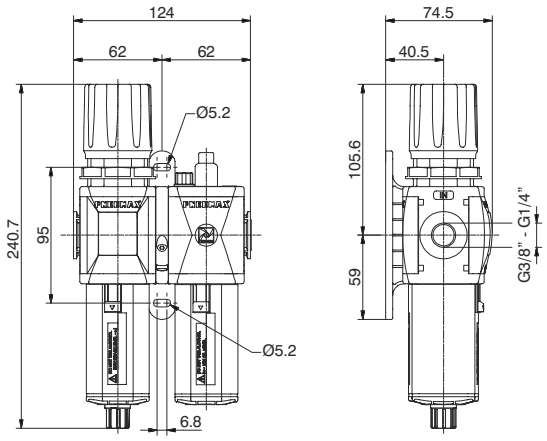

Example : GT172BHG : size 2, combined group comprising Filter-regulator and Lubricator, Technopolymer threads, G3/8" connections, 0 to 8 bar adjusting range and 20 μm filter pore size

Flow rate curves

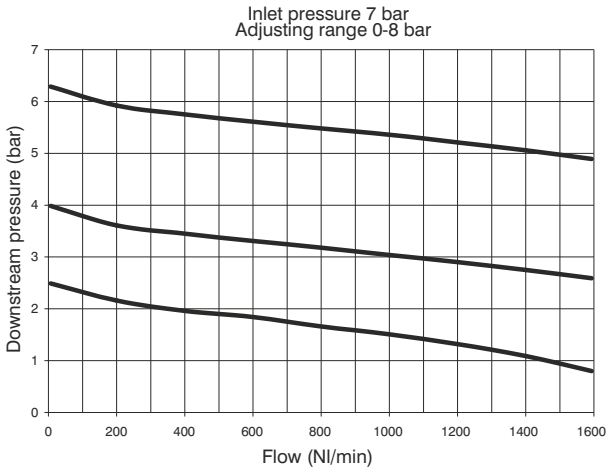

Adjustment characteristics

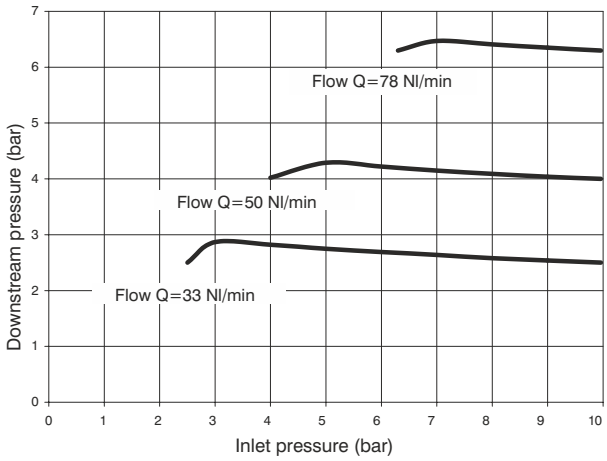

Operational characteristics

Combined group comprising Filter-regulator with built in manometer and Lubricator assembled with a (Y) type coupling kit for panel mounting.
Integrated manometer 0-12 bar as standard (for 0-8 and 0-12 bar range) and 0-4 bar (for 0-2 and 0-4 range)

Note

The pressure must be always regulating while increasing. For a more precise regulation and higher sensibility, the use of a regulator with a pressure range as close as possible to the regulated pressure is recommended.

Technical characteristics

Connections	G 1/4" - G 3/8"
Max. inlet pressure	13 bar
Working temperature	-5°C +50°C
Weight with Technopolymer threads	gr. 643
Weight with threaded inserts	gr. 663
Pressure range	0-2 bar / 0-4 bar 0-8 bar / 0-12 bar
Filter pore size	5 μm - 20 μm - 50 μm
Bowl capacity	34 cm^3
Indicative oil drop rate	1 drop every 300/600 Nl
Oil type	FD22 - HG32
Bowl capacity	70 cm^3
Assembly positions	Vertical
Max. fitting torque (with Technopolymer threads)	G3/8" = 16 Nm
Max. fitting torque (with threaded inserts)	G1/4" = 20 Nm G3/8" = 25 Nm
Min. operational flow at 6,3 bar	70 Nl/min.

Ordering code

G V 172 C T S O D Z

V	VERSION
	N = Metal inserts
	T = Technopolymer thread
C	CONNECTIONS
	A = G1/4" (only for "N" version)
	B = G3/8"
	C = 3/8 NPT (only for "N" version)
T	TYPE
	H = Built in gauge
	J = G1/8" gauge connection
S	FILTER PORE SIZE ADJUSTING RANGE
	C = 5 μm / 0-8 bar
	D = 5 μm / 0-12 bar
	G = 20 μm / 0-8 bar
	H = 20 μm / 0-12 bar
	N = 50 μm / 0-8 bar
	P = 50 μm / 0-12 bar
O	OPTIONS
	= Standard *
	A = Min.oil level indicator NO
	C = Min.oil level indicator NC
	S = Automatic drain
	SA = Automatic drain + Min.oil level indicator NO
	SC = Automatic drain + Min.oil level indicator NC
D	FLOW DIRECTION
	= Standard (from left to right)
	W = from right to left
Z	BOWL OPTIONS
	= Standard *
	N = Nylon bowl

* no additional letter required

Service unit assembled (F+RM+L) (F+R+L) (F+RW+L)

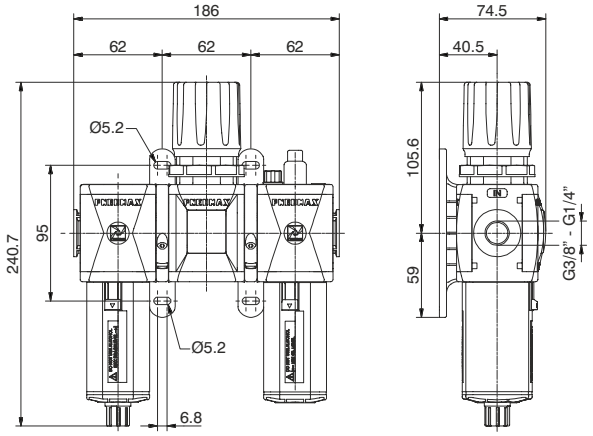

Example : GT172BKG : size 2 combined group comprising Filter, Regulator and Lubricator Technopolymer threads, G3/8" connections, 0 to 8 bar adjusting range and 20 μm filter pore size

Flow rate curves

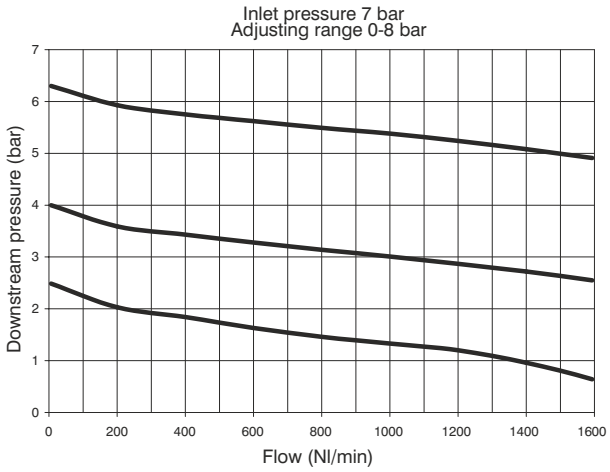

Adjustment characteristics

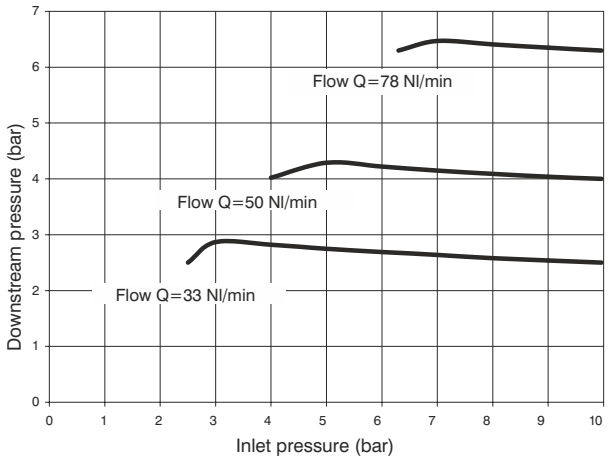

Operational characteristics

Combined group comprising Filter, Regulator with built in manometer and Lubricator assembled with two (Y) type coupling kits for panel mounting.
Integrated manometer 0-12 bar as standard (for 0-8 and 0-12 bar range) and 0-4 bar (for 0-2 and 0-4 range)

Note

The pressure must be always regulating while increasing. For a more precise regulation and higher sensibility, the use of a regulator with a pressure range as close as possible to the regulated pressure is recommended.

Technical characteristics

Connections	G 1/4" - G 3/8"
Max. inlet pressure	13 bar
Working temperature	-5°C +50°C
Weight with Technopolymer threads	gr. 796
Weight with threaded inserts	gr. 826
Pressure range	0-2 bar / 0-4 bar 0-8 bar / 0-12 bar
Filter pore size	5 μm - 20 μm - 50 μm
Bowl capacity	34 cm^3
Indicative oil drop rate	1 drop every 300/600 Nl
Oil type	FD22 - HG32
Bowl capacity	70 cm^3
Assembly positions	Vertical
Max. fitting torque (with Technopolymer threads)	G3/8" = 16 Nm
Max. fitting torque (with threaded inserts)	G1/4" = 20 Nm G3/8" = 25 Nm
Min. operational flow at 6,3 bar	70 Nl/min.

Ordering code

G Ⓥ 172 Ⓒ Ⓣ Ⓢ Ⓞ Ⓓ Ⓩ

Ⓥ	VERSION
	N = Metal inserts
	T = Technopolymer thread
Ⓒ	CONNECTIONS
	A = G1/4"(only for "N" version)
	B = G3/8"
	C = 3/8 NPT(only for "N" version)
Ⓣ	TYPE
	K = Built in gauge
	T = G1/8" gauge connection
Ⓢ	FILTER PORE SIZE ADJUSTING RANGE
	C = 5 μm / 0-8 bar
	D = 5 μm / 0-12 bar
	G = 20 μm / 0-8 bar
	H = 20 μm / 0-12 bar
	N = 50 μm / 0-8 bar
	P = 50 μm / 0-12 bar
Ⓞ	OPTIONS
	= Standard *
	A = Min.oil level indicator NO
	C = Min.oil level indicator NC
	S = Automatic drain
	SA = Automatic drain + Min.oil level indicator NO
	SC = Automatic drain + Min.oil level indicator NC
Ⓓ	FLOW DIRECTION
	= Standard (from left to right)
	W = from right to left
Ⓩ	BOWL OPTIONS
	= Standard *
	N = Nylon bowl

* no additional letter required

3

Service unit assembled (EM+PA+L) (E+PA+L) (EW+PA+L)

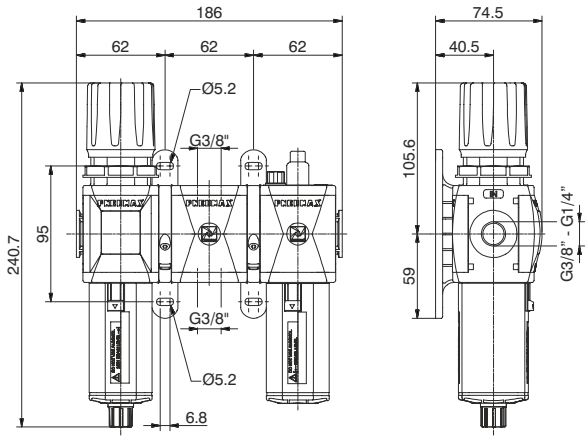

Example : GT172BNG : size 2 combined group comprising Filter-regulator, Air intake and Lubricator Technopolymer threads, G3/8" connections, 0 to 8 bar adjusting range and 20 μm filter pore size

Flow rate curves

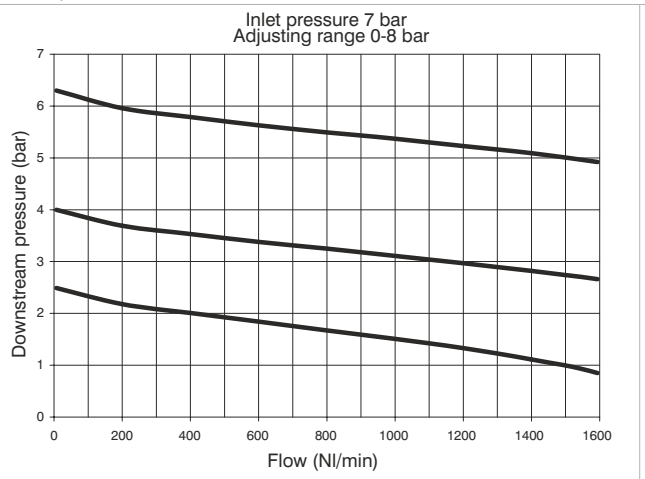

Adjustment characteristics

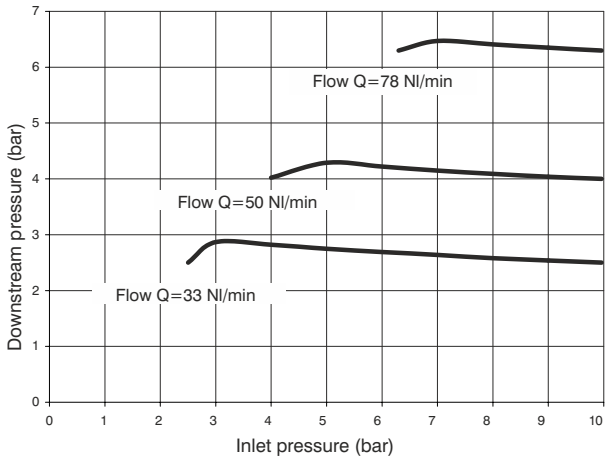

Operational characteristics

Combined group comprising Filter-regulator with built in manometer, Air intake and Lubricator assembled with two (Y) type coupling kits for panel mounting. Integrated manometer 0-12 bar as standard (for 0-8 and 0-12 bar range) and 0-4 bar (for 0-2 and 0-4 range)

Note

The pressure must be always regulating while increasing. For a more precise regulation and higher sensibility, the use of a regulator with a pressure range as close as possible to the regulated pressure is recommended.

Technical characteristics

Connections	G 1/4" - G 3/8"
Max. inlet pressure	13 bar
Working temperature	-5°C +50°C
Weight with Technopolymer threads	gr. 771,5
Weight with threaded inserts	gr. 791,5
Pressure range	0-2 bar / 0-4 bar 0-8 bar / 0-12 bar
Filter pore size	5 μm - 20 μm - 50 μm
Bowl capacity	34 cm^3
Indicative oil drop rate	1 drop every 300/600 Nl
Oil type	FD22 - HG32
Bowl capacity	70 cm^3
Assembly positions	Vertical
Max. fitting torque (with Technopolymer threads)	G3/8" = 16 Nm
Max. fitting torque (with threaded inserts)	G1/4" = 20 Nm G3/8" = 25 Nm
Min. operational flow at 6,3 bar	70 Nl/min.

Ordering code

G Ⓥ 172 Ⓒ Ⓣ Ⓢ Ⓞ Ⓓ Ⓩ

Ⓥ	VERSION N = Metal inserts T = Technopolymer thread
Ⓒ	CONNECTIONS A = G1/4"(only for "N" version) B = G3/8" C = 3/8 NPT(only for "N" version)
Ⓣ	TYPE N = Built in gauge P = G1/8" gauge connection
Ⓢ	FILTER PORE SIZE ADJUSTING RANGE C = 5 μm / 0-8 bar D = 5 μm / 0-12 bar G = 20 μm / 0-8 bar H = 20 μm / 0-12 bar N = 50 μm / 0-8 bar P = 50 μm / 0-12 bar
Ⓞ	OPTIONS = Standard * A = Min.oil level indicator NO C = Min.oil level indicator NC S = Automatic drain SA = Automatic drain + Min.oil level indicator NO SC = Automatic drain + Min.oil level indicator NC
Ⓓ	FLOW DIRECTION = Standard (from left to right) W = from right to left
Ⓩ	BOWL OPTIONS = Standard * N = Nylon bowl

* no additional letter required

Service unit assembled (EM+PP+L) (E+PP+L) (EW+PP+L)

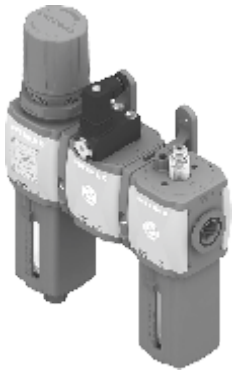

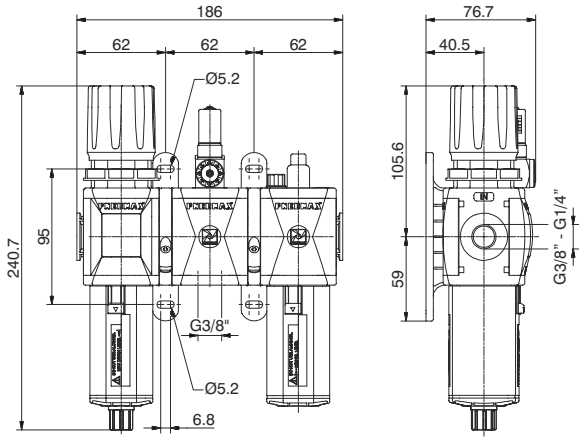

Example : GT172BRG : size 2 combined group comprising Filter-Regulator, Pressure switch and Lubricator Technopolymer threads, G3/8" connections 0 to 8 bar adjusting range and 20 μm filter pore size

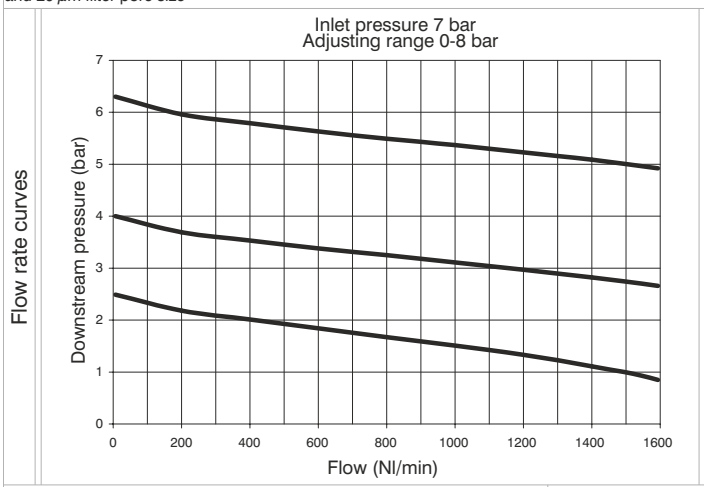

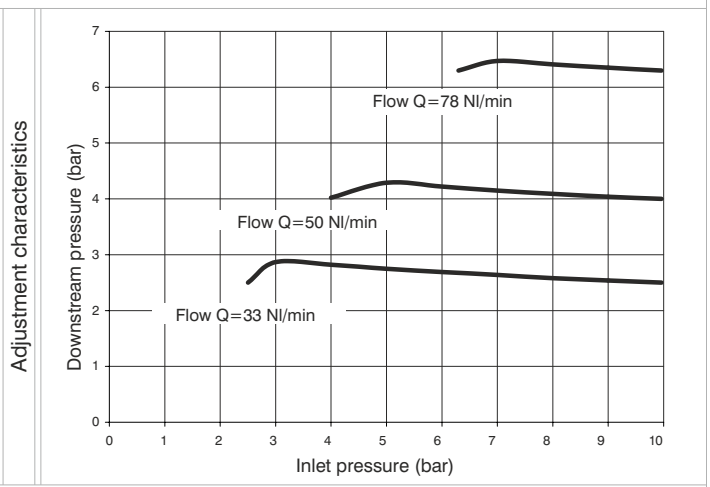

Operational characteristics

Combined group comprising Filter-regulator with built in manometer, Pressure switch and Lubricator assembled with two (Y) type coupling kits for panel mountings. Integrated manometer 0-12 bar as standard (for 0-8 and 0-12 bar range) and 0-4 bar (for 0-2 and 0-4 range)

Note

The pressure must be always regulating while increasing. For a more precise regulation and higher sensibility, the use of a regulator with a pressure range as close as possible to the regulated pressure is recommended.

Technical characteristics

Connections	G 1/4" - G 3/8"
Max. inlet pressure	13 bar
Working temperature	-5°C +50°C
Weight with Technopolymer threads	gr. 855
Weight with threaded inserts	gr. 875
Pressure range	0-2 bar / 0-4 bar 0-8 bar / 0-12 bar
Filter pore size	5 μm - 20 μm - 50 μm
Bowl capacity	34 cm^3
Indicative oil drop rate	1 drop every 300/600 Nl
Oil type	FD22 - HG32
Bowl capacity	70 cm^3
Assembly positions	Vertical
Max. fitting torque (with Technopolymer threads)	G3/8" = 16 Nm
Max. fitting torque (with threaded inserts)	G1/4" = 20 Nm G3/8" = 25 Nm
Min. operational flow at 6,3 bar	70 Nl/min.

Ordering code

G Ⓥ 172 Ⓒ Ⓣ Ⓢ Ⓞ Ⓓ Ⓩ

Ⓥ	VERSION
	N = Metal inserts
	T = Technopolymer thread
Ⓒ	CONNECTIONS
	A = G1/4"(only for "N" version)
	B = G3/8"
	C = 3/8 NPT(only for "N" version)
Ⓣ	TYPE
	R = Built in gauge
	C = G1/8" gauge connection
Ⓢ	FILTER PORE SIZE ADJUSTING RANGE
	C = 5 μm / 0-8 bar
	D = 5 μm / 0-12 bar
	G = 20 μm / 0-8 bar
	H = 20 μm / 0-12 bar
	N = 50 μm / 0-8 bar
	P = 50 μm / 0-12 bar
Ⓞ	OPTIONS
	= Standard *
	A = Min.oil level indicator NO
	C = Min.oil level indicator NC
	S = Automatic drain
	SA = Automatic drain + Min.oil level indicator NO
	SC = Automatic drain + Min.oil level indicator NC
Ⓓ	FLOW DIRECTION
	= Standard (from left to right)
	W = from right to left
Ⓩ	BOWL OPTIONS
	= Standard *
	N = Nylon bowl

* no additional letter required

3

Service unit assembled (VL+EM) (VL+E) (VL+EW)

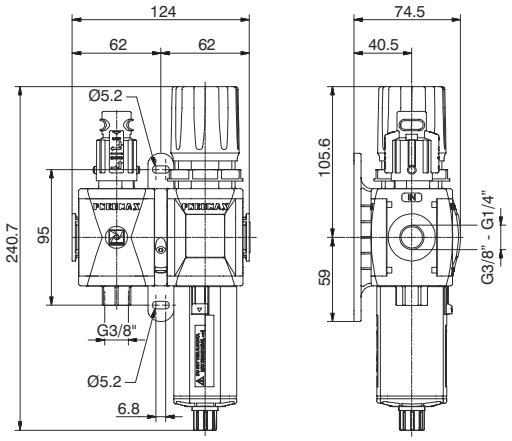

Example : GT172BVGG : size 2 combined group comprising Shut-off valve, Filter-regulator Technopolymer threads, G3/8" connections 0 to 8 bar adjusting range and 20 μm filter pore size

Flow rate curves

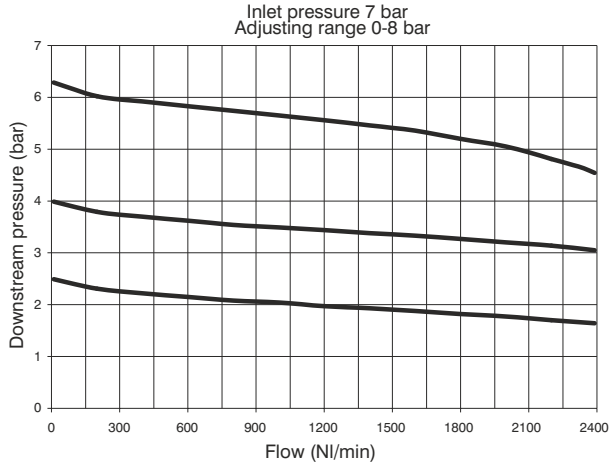

Adjustment characteristics

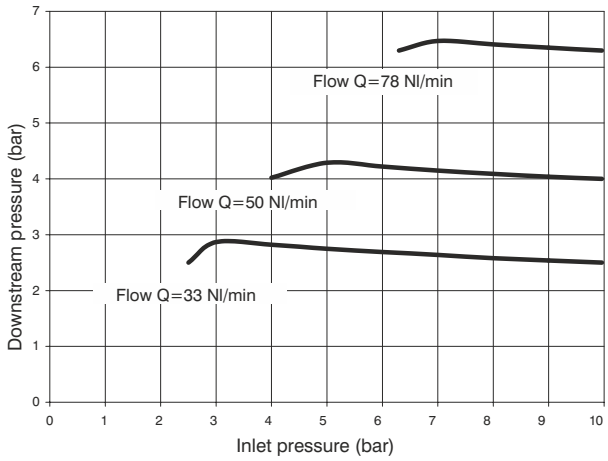

Operational characteristics

Combined group comprising manual shut-off valve, Filter - regulator with built in manometer, assembled with one (Y) type coupling kit for panel mountings.
Integrated manometer 0-12 bar as standard (for 0-8 and 0-12 bar range) and 0-4 bar (for 0-2 and 0-4 range)

Note

The pressure must be always regulating while increasing. For a more precise regulation and higher sensibility, the use of a regulator with a pressure range as close as possible to the regulated pressure is recommended.

Technical characteristics

Connections	G 1/4" - G 3/8"
Max. inlet pressure	13 bar
Working temperature	-5°C +50°C
Weight with Technopolymer threads	gr. 613
Weight with threaded inserts	gr. 633
Pressure range	0-2 bar / 0-4 bar 0-8 bar / 0-12 bar
Filter pore size	5 μm - 20 μm - 50 μm
Bowl capacity	34 cm^3
Indicative oil drop rate	1 drop every 300/600 Nl
Oil type	FD22 - HG32
Bowl capacity	70 cm^3
Assembly positions	Vertical
Max. fitting torque (with Technopolymer threads)	G3/8"= 16 Nm
Max. fitting torque (with threaded inserts)	G1/4" = 20 Nm G3/8" = 25 Nm
Min. operational flow at 6,3 bar	70 Nl/min.

Ordering code

G V 172 C T S O D Z

V	VERSION
	N = Metal inserts
	T = Technopolymer thread
C	CONNECTIONS
	A = G1/4" (only for "N" version)
	B = G3/8"
	C = 3/8 NPT (only for "N" version)
T	TYPE
	VG = Built in gauge
	VU = G1/8" gauge connection
S	FILTER PORE SIZE ADJUSTING RANGE
	C = 5 μm / 0-8 bar
	D = 5 μm / 0-12 bar
	G = 20 μm / 0-8 bar
	H = 20 μm / 0-12 bar
	N = 50 μm / 0-8 bar
	P = 50 μm / 0-12 bar
O	OPTIONS
	= Standard *
	S = Automatic drain
D	FLOW DIRECTION
	= Standard (from left to right)
	W = from right to left
Z	BOWL OPTIONS
	= Standard *
	N = Nylon bowl

* no additional letter required

Service unit assembled (VL+EM+L) (VL+E+L) (VL+EW+L)

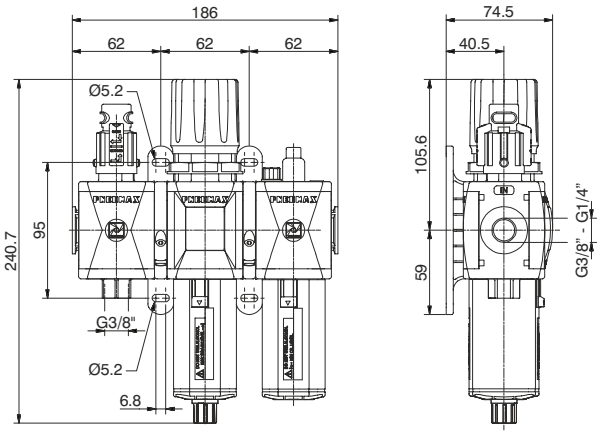

Example : GT172BVHG : size 2 combined group comprising Shut-off valve, Filter-regulator and Lubricator Technopolymer threads, G3/8" connections 0 to 8 bar adjusting range and 20 μm filter pore size

Flow rate curves

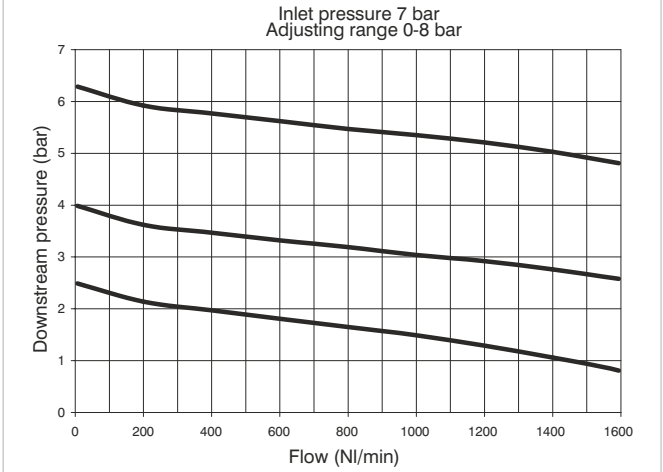

Adjustment characteristics

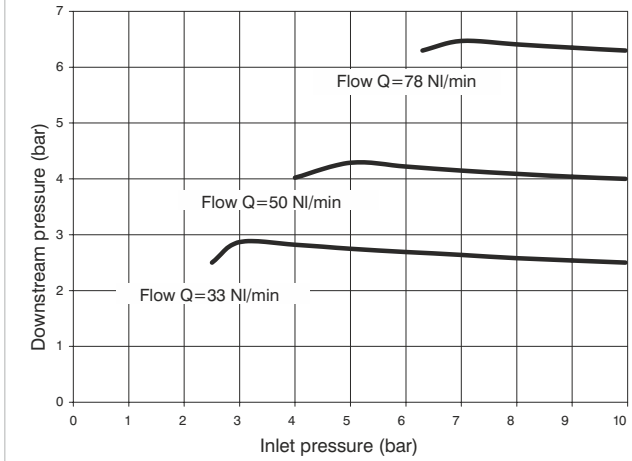

Operational characteristics

Combined group comprising manual shut-off valve, Filter - regulator with built in manometer and Lubricator assembled with two(Y) type coupling kits for panel mountings.
Integrated manometer 0-12 bar as standard (for 0-8 and 0-12 bar range) and 0-4 bar (for 0-2 and 0-4 range)

Note

The pressure must be always regulating while increasing. For a more precise regulation and higher sensibility, the use of a regulator with a pressure range as close as possible to the regulated pressure is recommended.

Technical characteristics

Connections	G 1/4" - G 3/8"
Max. inlet pressure	13 bar
Working temperature	-5°C +50°C
Weight with Technopolymer threads	gr. 856
Weight with threaded inserts	gr. 886
Pressure range	0-2 bar / 0-4 bar 0-8 bar / 0-12 bar
Filter pore size	5 μm - 20 μm - 50 μm
Bowl capacity	34 cm^3
Indicative oil drop rate	1 drop every 300/600 Nl
Oil type	FD22 - HG32
Bowl capacity	70 cm^3
Assembly positions	Vertical
Max. fitting torque (with Technopolymer threads)	G3/8" = 16 Nm
Max. fitting torque (with threaded inserts)	G1/4" = 20 Nm G3/8" = 25 Nm
Min. operational flow at 6,3 bar	70 Nl/min.

Ordering code

G Ⓥ 172 Ⓒ Ⓣ Ⓢ Ⓞ Ⓓ Ⓩ

Ⓥ	VERSION
	N = Metal inserts
	T = Technopolymer thread
Ⓒ	CONNECTIONS
	A = G1/4" (only for "N" version)
	B = G3/8"
	C = 3/8 NPT (only for "N" version)
Ⓣ	TYPE
	VH = Built in gauge
	VJ = G1/8" gauge connection
Ⓢ	FILTER PORE SIZE ADJUSTING RANGE
	C = 5 μm / 0-8 bar
	D = 5 μm / 0-12 bar
	G = 20 μm / 0-8 bar
	H = 20 μm / 0-12 bar
	N = 50 μm / 0-8 bar
	P = 50 μm / 0-12 bar
Ⓞ	OPTIONS
	= Standard *
	A = Min.oil level indicator NO
	C = Min.oil level indicator NC
	S = Automatic drain
	SA = Automatic drain + Min.oil level indicator NO
	SC = Automatic drain + Min.oil level indicator NC
Ⓓ	FLOW DIRECTION
	= Standard (from left to right)
	W = from right to left
Ⓩ	BOWL OPTIONS
	= Standard *
	N = Nylon bowl

* no additional letter required

3

Service unit assembled (VL+F+RM+L) (VL+F+R+L) (VL+F+RW+L)

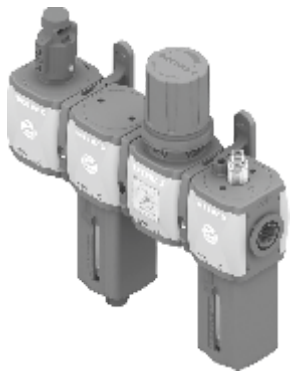

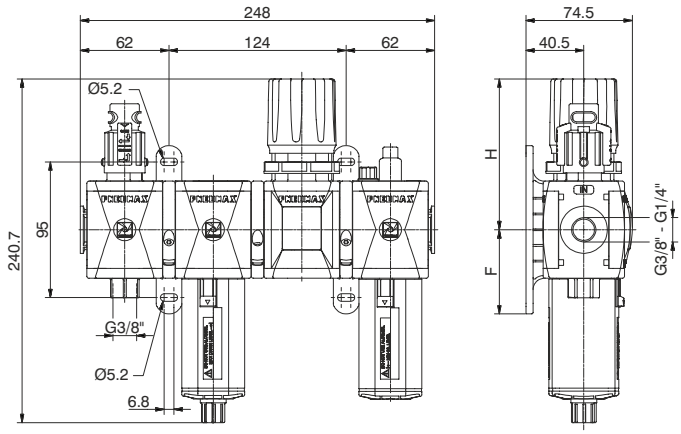

Example : GT172BVKG : size 2 combined group comprising Shut-off valve, Filter, Regulator and Lubricator Technopolymer threads, G3/8" connections 0 to 8 bar adjusting range and 20 μm filter pore size

Flow rate curves

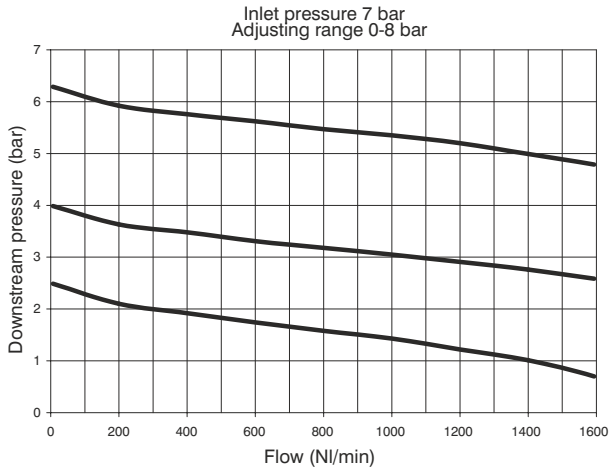

Adjustment characteristics

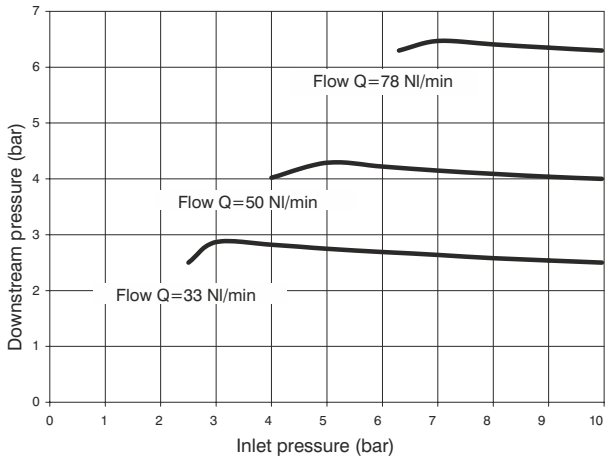

Operational characteristics

Combined group comprising manual shut - off valve, Filter, Regulator with built in manometer and Lubricator , assembled with two (Y) type coupling kits for panel mounting and one (X) type coupling kit.
Integrated manometer 0-12 bar as standard (for 0-8 and 0-12 bar range) and 0-4 bar (for 0-2 and 0-4 range)

Note

The pressure must be always regulating while increasing. For a more precise regulation and higher sensibility, the use of a regulator with a pressure range as close as possible to the regulated pressure is recommended.

Technical characteristics

Connections	G 1/4" - G 3/8"
Max. inlet pressure	13 bar
Working temperature	-5°C +50°C
Weight with Technopolymer threads	gr. 997
Weight with threaded inserts	gr. 1037
Pressure range	0-2 bar / 0-4 bar 0-8 bar / 0-12 bar
Filter pore size	5 μm - 20 μm - 50 μm
Bowl capacity	34 cm^3
Indicative oil drop rate	1 drop every 300/600 Nl
Oil type	FD22 - HG32
Bowl capacity	70 cm^3
Assembly positions	Vertical
Max. fitting torque (with Technopolymer threads)	G3/8" = 16 Nm
Max. fitting torque (with threaded inserts)	G1/4" = 20 Nm G3/8" = 25 Nm
Min. operational flow at 6,3 bar	70 Nl/min.

Ordering code

G V 172 C T S O D Z

V	VERSION
	N = Metal inserts
	T = Technopolymer thread
C	CONNECTIONS
	A = G1/4" (only for "N" version)
	B = G3/8"
	C = 3/8 NPT (only for "N" version)
T	TYPE
	VK = Built in gauge
	VT = G1/8" gauge connection
S	FILTER PORE SIZE ADJUSTING RANGE
	C = 5 μm / 0-8 bar
	D = 5 μm / 0-12 bar
	G = 20 μm / 0-8 bar
	H = 20 μm / 0-12 bar
	N = 50 μm / 0-8 bar
	P = 50 μm / 0-12 bar
O	OPTIONS
	= Standard *
	A = Min.oil level indicator NO
	C = Min.oil level indicator NC
	S = Automatic drain
	SA = Automatic drain + Min.oil level indicator NO
	SC = Automatic drain + Min.oil level indicator NC
D	FLOW DIRECTION
	= Standard (from left to right)
	W = from right to left
Z	BOWL OPTIONS
	= Standard *
	N = Nylon bowl

* no additional letter required

Service unit assembled (VL+EM+PA+L) (VL+E+PA+L) (VL+EW+PA+L)

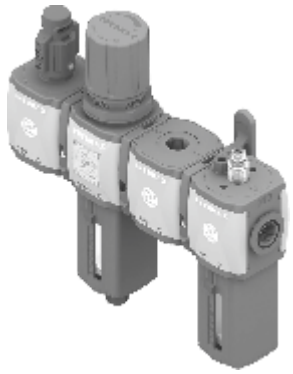

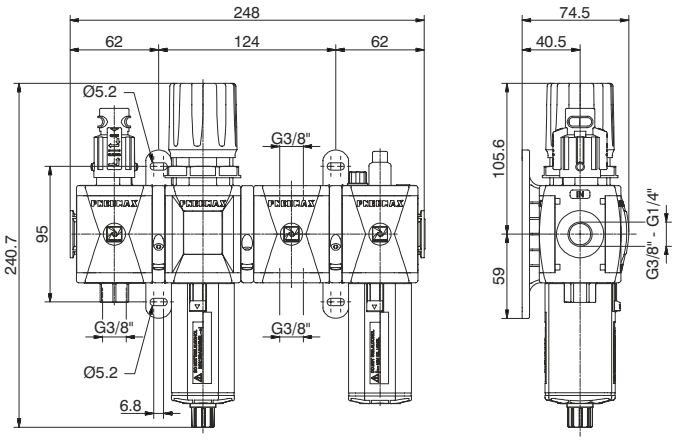

Example : GT172BVNG : size 2 combined group comprising Shut-off valve, Filter-regulator, Air intake and Lubricator Technopolymer threads, G3/8" connections 0 to 8 baradjusting range and 20 μm filter pore size

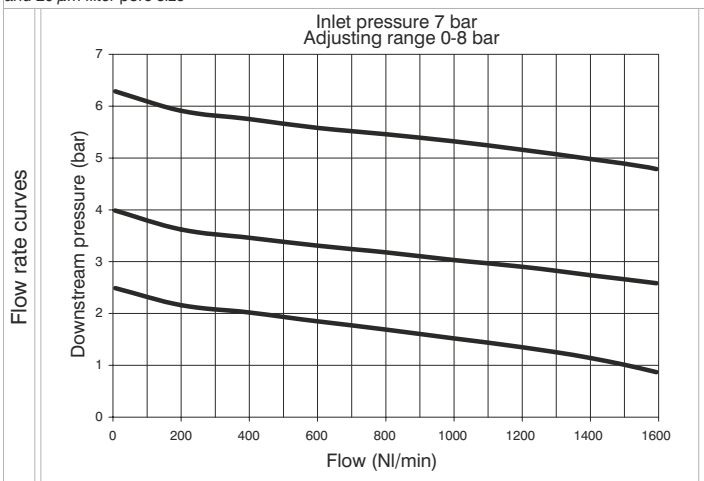

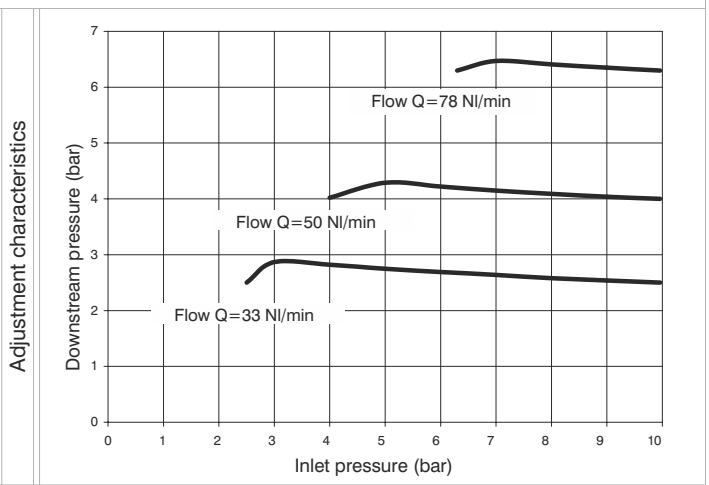

Operational characteristics

Combined group comprising manual shut-off valve, Filter - regulator with built in manometer, Air intake and Lubricator, assembled with two (Y) type coupling kits for panel mounting and one (X) type coupling kit.
Integrated manometer 0-12 bar as standard
(for 0-8 and 0-12 bar range) and 0-4 bar (for 0-2 and 0-4 range)

Note

The pressure must be always regulating while increasing. For a more precise regulation and higher sensibility, the use of a regulator with a pressure range as close as possible to the regulated pressure is recommended.

Technical characteristics

Connections	G 1/4" - G 3/8"
Max. inlet pressure	13 bar
Working temperature	-5°C +50°C
Weight with Technopolymer threads	gr. 972,5
Weight with threaded inserts	gr. 1002,5
Pressure range	0-2 bar / 0-4 bar 0-8 bar / 0-12 bar
Filter pore size	5 μm - 20 μm - 50 μm
Bowl capacity	34 cm^3
Indicative oil drop rate	1 drop every 300/600 Nl
Oil type	FD22 - HG32
Bowl capacity	70 cm^3
Assembly positions	Vertical
Max. fitting torque (with Technopolymer threads)	G3/8" = 16 Nm
Max. fitting torque (with threaded inserts)	G1/4" = 20 Nm G3/8" = 25 Nm
Min. operational flow at 6,3 bar	70 Nl/min.

Ordering code

G Ⓥ 172 Ⓒ Ⓣ Ⓢ Ⓞ Ⓓ Ⓩ

Ⓥ	VERSION
	N = Metal inserts
	T = Technopolymer thread
Ⓒ	CONNECTIONS
	A = G1/4"(only for "N" version)
	B = G3/8"
	C = 3/8 NPT(only for "N" version)
Ⓣ	TYPE
	VN = Built in gauge
	VP = G1/8" gauge connection
Ⓢ	FILTER PORE SIZE ADJUSTING RANGE
	C = 5 μm / 0-8 bar
	D = 5 μm / 0-12 bar
	G = 20 μm / 0-8 bar
	H = 20 μm / 0-12 bar
	N = 50 μm / 0-8 bar
	P = 50 μm / 0-12 bar
Ⓞ	OPTIONS
	= Standard *
	A = Min.oil level indicator NO
	C = Min.oil level indicator NC
	S = Automatic drain
	SA = Automatic drain + Min.oil level indicator NO
	SC = Automatic drain + Min.oil level indicator NC
Ⓓ	FLOW DIRECTION
	= Standard (from left to right)
	W = from right to left
Ⓩ	BOWL OPTIONS
	= Standard *
	N = Nylon bowl

* no additional letter required

3

Service unit assembled (VL+EM+PP+L) (VL+E+PP+L) (VL+EW+PP+L)

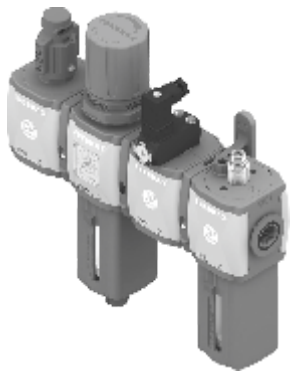

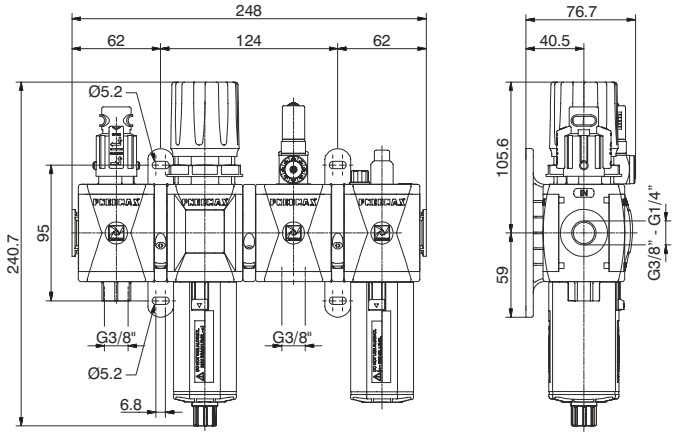

Example : GT172BVRG : size 2 combined group comprising Shut-off valve, Filter-regulator, Pressure switch and Lubricator Technopolymer threads, G3/8" connections adjusting range 0 to 8 bar and 20 μm filter pore size

Flow rate curves

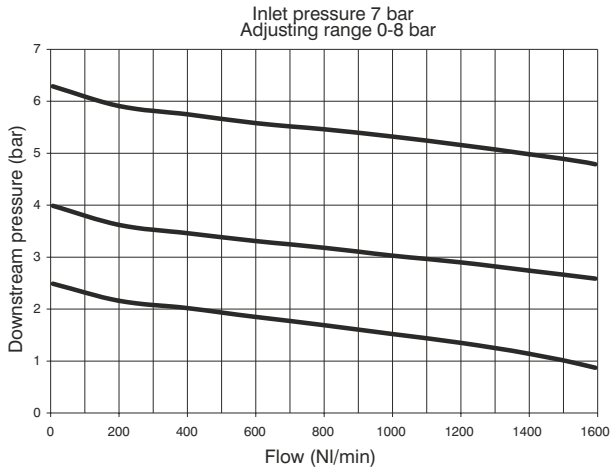

Adjustment characteristics

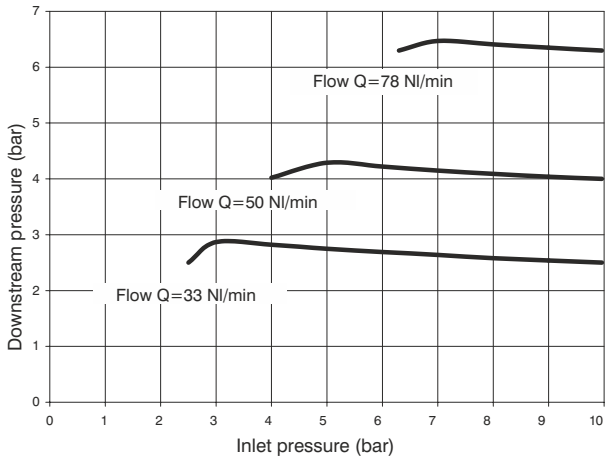

Operational characteristics

Combined group comprising manual shut-off valve, Filter - regulator with built in manometer, Pressure switch and Lubricator, assembled with two (Y) type coupling kits for panel mounting and one (X) type coupling kit.
Integrated manometer 0-12 bar as standard (for 0-8 and 0-12 bar range) and 0-4 bar (for 0-2 and 0-4 range)

Note

The pressure must be always regulating while increasing. For a more precise regulation and higher sensibility, the use of a regulator with a pressure range as close as possible to the regulated pressure is recommended.

Technical characteristics

Connections	G 1/4" - G 3/8"
Max. inlet pressure	13 bar
Working temperature	-5°C +50°C
Weight with Technopolymer threads	gr. 1056
Weight with threaded inserts	gr. 1086
Pressure range	0-2 bar / 0-4 bar 0-8 bar / 0-12 bar
Filter pore size	5 μm - 20 μm - 50 μm
Bowl capacity	34 cm^3
Indicative oil drop rate	1 drop every 300/600 Nl
Oil type	FD22 - HG32
Bowl capacity	70 cm^3
Assembly positions	Vertical
Max. fitting torque (with Technopolymer threads)	G3/8" = 16 Nm
Max. fitting torque (with threaded inserts)	G1/4" = 20 Nm G3/8" = 25 Nm
Min. operational flow at 6,3 bar	70 Nl/min.

Ordering code

G Ⓥ 172 Ⓒ Ⓣ Ⓢ Ⓞ Ⓓ Ⓩ

Ⓥ	VERSION
	N = Metal inserts
	T = Technopolymer thread
Ⓒ	CONNECTIONS
	A = G1/4" (only for "N" version)
	B = G3/8"
	C = 3/8 NPT (only for "N" version)
Ⓣ	TYPE
	VR = Built in gauge
	VC = G1/8" gauge connection
Ⓢ	FILTER PORE SIZE ADJUSTING RANGE
	C = 5 μm / 0-8 bar
	D = 5 μm / 0-12 bar
	G = 20 μm / 0-8 bar
	H = 20 μm / 0-12 bar
	N = 50 μm / 0-8 bar
	P = 50 μm / 0-12 bar
Ⓞ	OPTIONS
	= Standard *
	A = Min.oil level indicator NO
	C = Min.oil level indicator NC
	S = Automatic drain
	SA = Automatic drain + Min.oil level indicator NO
	SC = Automatic drain + Min.oil level indicator NC
Ⓓ	FLOW DIRECTION
	= Standard (from left to right)
	W = from right to left
Ⓩ	BOWL OPTIONS
	= Standard *
	N = Nylon bowl

* no additional letter required

Service unit assembled (VE+AP)

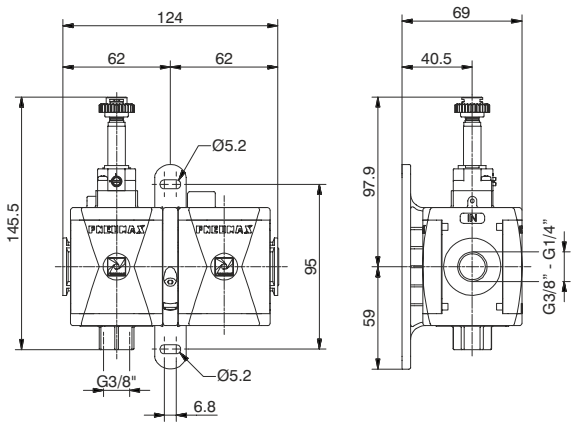

Example : GT172BSB2 : size 2 combined group comprising Electric shut-off valve, Progressive start-up valve without coil with M2 pilot Technopolymer threads, G3/8" connections

Operational characteristics

Combined group comprising Electric shut - off valve and Progressive start-up valve assembled with a (Y) type coupling kit for panel mounting.

Technical characteristics

Connections	G 1/4" - G 3/8"
Max. inlet pressure	10 bar
Min. inlet pressure	2.5 bar
Working temperature	-5°C +50°C
Weight with Technopolymer threads	gr. 373
Weight with threaded inserts	gr. 393
Assembly positions	Indifferent
Max. fitting torque (with Technopolymer threads)	G3/8" = 16 Nm
Max. fitting torque (with threaded inserts)	G1/4" = 20 Nm G3/8" = 25 Nm
Flow at 6 bar with Δp=1	1800 Nl/min.

Ordering code

GⓋ172ⒸSⒶ

Ⓥ	VERSION
	N = Metal inserts
	T = Technopolymer thread
Ⓒ	CONNECTIONS
	A = G1/4"(only for "N" version)
	B = G3/8"
	C = 3/8 NPT(only for "N" version)
Ⓐ	15 mm COIL VOLTAGE
	A4 = 12 V DC
	A5 = 24 V DC
	A6 = 24 V AC (50-60 Hz)
	A7 = 110 V AC (50-60 Hz)
	A8 = 230 V AC (50-60 Hz)
	A9 = 24 V DC (1 Watt)
	22 mm COIL VOLTAGE
	B2 = Without coil M2 mechanic
	B4 = 12 V DC
	B5 = 24 V DC
	B6 = 24 V AC (50-60 Hz)
	B7 = 110 V AC (50-60 Hz)
	B8 = 230 V AC (50-60 Hz)
	B9 = 24 V DC (2 Watt)
	30 mm COIL VOLTAGE
	C5 = 24 V DC
	C6 = 24 V AC (50-60 Hz)
	C7 = 110 V AC (50-60 Hz)
	C8 = 230 V AC (50-60 Hz)
	C9 = 24 V DC (2 Watt)

Construction and working characteristics

The new FRL units AIRPLUS series represents the evolution of the well known and consolidated 1700 series.
The main features are increased performances, reliability, easy and fast assembly and the introduction of the latest technical features.
With the exception of the air intake module and the pressure switch module all elements are available in two configurations: with technopolimer connections (IN and OUT) , (T series), or with metal threaded inserts , (N series). Bowls made of transparent polycarbonate (PC) are fitted with a bowl protection guard which is assembled on the body via a quick coupling mechanism provided with a safety button. The filter, available with three filtration grades (5μm, 20μm and 50μm) is fitted as standard with a drain mechanism which can be operated manually or semi-automatically. On request is available the auto-drain mechanism. The regulator is based on the rolling diaphragm technology with low hysteresis and the system is balanced. The unit can be fitted with integrated flush mounting pressure gauge (0 to 12 bar range). 4 pressure ranges are available going from 0 to 12 bar and the regulating knob can be blocked in position simply by pressing it down. A dedicated version is available for battery mounting , up to a maximum of 6 units. The lubricator is based on the Venturi principle and the oil quantity is regulated via the adjusting screw positioned don the transparent polycarbonate (PC) regulating dome which also ensure clear visibility of the oil flow and regulation. The oil suction pipe is fitted as standard with a sintered filter which ensures that any contaminant that should be present in the oil will reach the down stream circuit. Shoot off valve is available in two versions, one manually operated and one solenoid operated. In both cases the unit is fitted with a threaded connection for depressurising the downstream circuit. On the manually operated version, in the lock position, it is possible to fit up to three locks in order to prevent the accidental pressurization of the pneumatic circuit avoiding accidents or damages. The solenoid operated version is available with a 15mm or with a 22mm solenoid valve. The soft start valve ensure a progressive pressurization of the down stream circuit avoiding sudden pressure surges which could be dangerous for the devices fitted on the down stream circuit. The filling time can be easily adjusted via a built in flow regulator. The full flow rate is allowed only once the down stream pressure has reached 50% of the value of the inlet pressure. The pressure switch module which can be set between 2 and 10 bar and the air intake module complete the range.
The elements are joint together via dedicated quick coupling technopolimer flanges which allows for the units to be panel mounted moreover ensure the possibility to replace any component without disassembling the FRL group from its position.
90° mounting brackets and standard gauges are also available.

Instruction for installation and operation

The FRL unit must be installed as close as possible to the application. The air flow direction must follow the directions indicated on the single units in correspondence of the threaded connections.(IN and OUT)
Units provided with bowl must be mounted vertically with the bawl facing down. Single units or groups can be panel mounted via the Y type flanges, regulators and filter-regulators can be mounted via the 90° zinc plated steel bracket. In order to mount the 90° bracket it is necessary to remove the regulating knob and then the locking ring before positioning the bracket. All units must be operated according to the specified pressure and temperature ranges; fittings must be mounted without exciding the maximum torque allowed. Ensure that the units cover plates are in position before pressure is applied. The cover plates are needed to lock in position the top part of the unit.
The condense level in filer and filter-regulators bowls must never exceed the maximum level indicated on the bowls. With manual or semi automatic drain the condense can be discharged via a 6/4mm tube directly connected to the drain tap. On the pressure regulator the pressure value must always set wile pressure is rising and ideally the unit pressure range should be chosen based on the pressure value to be regulated.
Lubricators must be filled with class FD22 and HG32 oils. Ensure, both on the inlet and on the outlet , that the flow rate is above the minimum flow rate required to operate the unit. Below this value the units does not operate. The oil quantity can be regulated via the regulating screw on the transparent polycarbonate dome through which it is also clearly visible the oil flow. A drop every 300-600 litres should be allowed.
The oil can be re-filled while the pneumatic circuit is pressurized thanks to the exhaust valve which is built in the refill plug and allows for the bowl to be depressurized and the oil refill directly form in the bowl or from the plug. The manual shot off valve needs, to be operated, a push and turn action (clockwise) in order to close it and discharge the down stream circuit it is necessary to turn anti clock wise the knob. The soft start valve is used to slowly and progressively pressurize the down stream circuit, the time needed to do so can be set by means of the built in flow regulator.
The soft start valve on its own does not allow for the down stream circuit to be discharged, in order to do so it is necessary to combine it with a shot off valve (to be mounted upstream).

Maintenance

For any maintenance which requires the removal of the top plugs/ supports from the body it is necessary to preventively remove the sides cover plates. If the top plugs\supports are removed with the sides plates still in their position the unit could be permanently damaged.

Bowls , plugs and supports are assembled with a bayonet type mechanism. In order to remove them rotate anti clockwise until the mechanical stop is reached and than remove from the body (for the bowls firstly press down the green safety button). Bowls and transparent parts can be cleaned with water and neutral soap. Do not use solvents or alcohol.
Filtering elements (from filters and filter regulators) made of HDPE can be regenerated by washing and blowing them. In order to remove them it is necessary to remove the bowl unscrew the filter element and replace it with a new one or clean it. The oil can be re-filled while the pneumatic circuit is pressurized thanks to the exhaust valve which is built in the refill plug and allows for the bowl to be depressurized. In order to be able to un-mount the bowl it is necessary unscrew the refill plug positioned near the oil dome, once this operation has been carried out it is possible to remove the bowl to re fill it or to refill from the refill plug. Refilling directly the bowl is suggested.
Should the pressure regulator not perform properly or should present a constant leackage from the relieving replaced the diaphragm by unloading completely the regulating spring before removing the regulation support. Any other maintenance operation, in consideration of the complexity of the assembly, and the need of a through test according to the Pneumax spa specification, should be carried out by the manufacturer.

Fittings maximum recommended torque applicable

THREAD	Technopolymer version (T)	Metal version (N)
G1/8”	4 Nm	15 Nm
G1/4”	9 Nm	20 Nm
G3/8”	16 Nm	25 Nm
G1/2”	22 Nm	30 Nm

Filter (F)

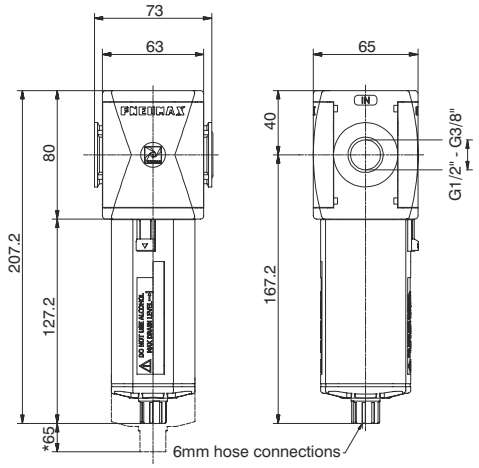

*Bowl removal maximum height

Example: T173BFB : size 3, Filter with Technopolymer threads, G1/2" connections, 20 μm filter pore size

Flow rate curves

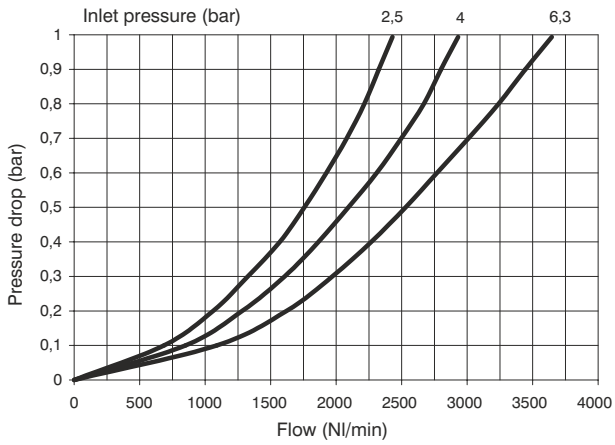

Operational characteristics

- Double filtering action: air flow centrifugation and filter element
- Filtering element made of HDPE (high density polyethylene) available in three different filtration grades (5μm, 20μm and 50μm) can be regenerated by washing it or replaced.
- Transparent bowl made off polycarbonate with bowl protection guard.
- Bowl assembly via bayonet type quick coupling mechanism with safety button.
- Semi-automatic drain mounted as standard; automatic drain upon request.

Note

In order to ensure adequate flow on the auto drain version it is recommended to use minimum a 6mm fitting.

Technical characteristics

Connections	G 3/8" - G 1/2"
Max. inlet pressure	13 bar
Minimum working pressure with automatic drain	0,5 bar
Maximum working pressure with automatic drain	10 bar
Working temperature	-5°C +50°C
Weight with Technopolymer threads	gr. 320
Weight with threaded inserts	gr. 340
Filter pore size	5 μm - 20 μm - 50 μm
Bowl capacity	68 cm^3
Assembly positions	Vertical
Max. fitting torque (with Technopolymer threads)	G1/2" = 22 Nm
Max. fitting torque (with threaded inserts)	G3/8" = 25 Nm G1/2" = 30 Nm

Ordering code

Ⓥ173ⒸFⓈⓄⓏ

Ⓥ	VERSION
	N = Metal inserts
	T = Technopolymer thread
Ⓒ	CONNECTIONS
	A = G3/8"(only for "N" version)
	B = G1/2"
	C = 1/2 NPT(only for "N" version)
Ⓢ	FILTER PORE SIZE
	A = 5 μm
	B = 20 μm
	C = 50 μm
Ⓞ	OPTIONS
	= Standard *
	S = Automatic drain
Ⓩ	BOWL OPTIONS
	= Standard *
	N = Nylon bowl

* no additional letter required

Coalescing filter (D)

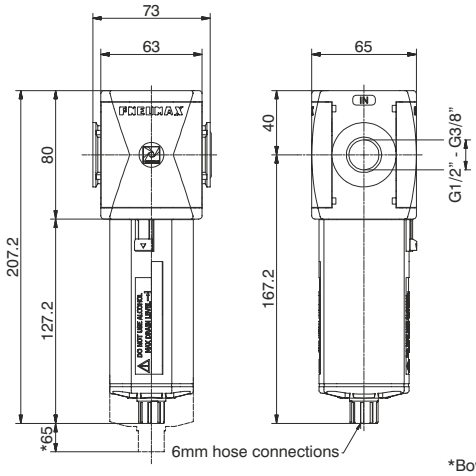

*Bowl removal maximum height

Example : T173BDA : Coalescing size 3, Filter with Technopolymer threads, G1/2" connections, filter efficency 99,97%

Flow rate curves

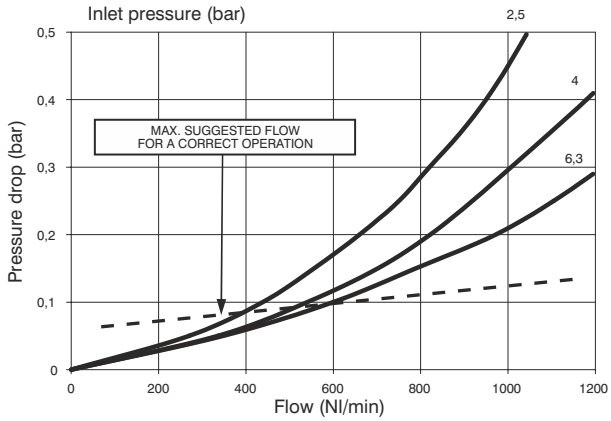

Operational characteristics

- Coalescing filter element with filtration grade of 0,01 μm
- Transparent bowl made off polycarbonate with bowl protection guard.
- Bowl assembly via bayonet type quick coupling mechanism with safety button.
- Semi-automatic drain mounted as standard; automatic drain upon request.

Note

In order to ensure a better grade of filtration it is recommended to use a 5 μm filter before the coalescing filter. In order to ensure adequate flow on the auto drain version it is recommended to use minimum a 6mm fitting.

Technical characteristics

Connections	G 3/8" - G 1/2"
Max. inlet pressure	13 bar
Minimum working pressure with automatic drain	0,5 bar
Maximum working pressure with automatic drain	10 bar
Working temperature	-5°C +50°C
Weight with Technopolymer threads	gr. 325
Weight with threaded inserts	gr. 345
Filter efficiency with 0,01 μm particle	99,97%
Bowl capacity	68cm^3
Assembly positions	Vertical
Max. fitting torque (with Technopolymer threads)	G1/2" = 22 Nm
Max. fitting torque (with threaded inserts)	G3/8" = 25 Nm G1/2" = 30 Nm

Ordering code

Ⓥ173ⒸDⒺⓄⓏ

Ⓥ	VERSION
	N = Metal inserts
	T = Technopolymer thread
Ⓒ	CONNECTIONS
	A = G3/8"(only for "N" version)
	B = G1/2"
	C = 1/2 NPT(only for "N" version)
Ⓔ	FILTER EFFICIENCY
	A = 99,97%
Ⓞ	OPTIONS
	= Standard *
	S = Automatic drain
Ⓩ	BOWL OPTIONS
	= Standard *
	N = Nylon bowl

* no additional letter required

Oil removal filter (DB)

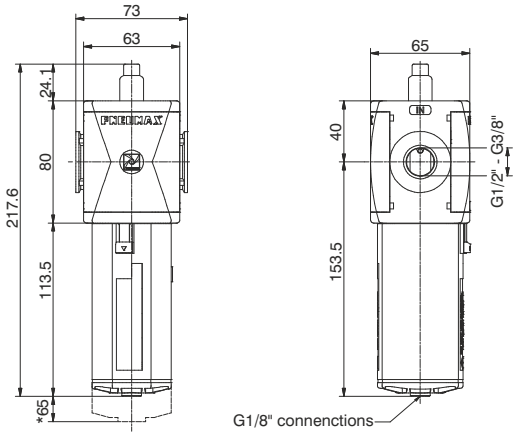

*Bowl removal maximum height

Example : T173BDBV : size 3 Oil removal filter, with clogging gauge, Technopolymer threads, G1/2" connections.

Efficiency curve

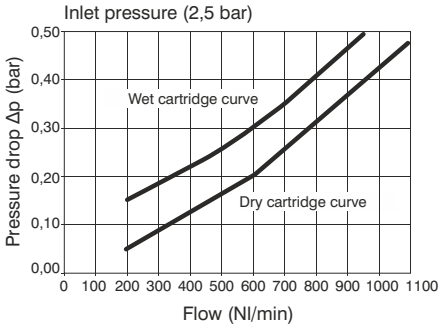

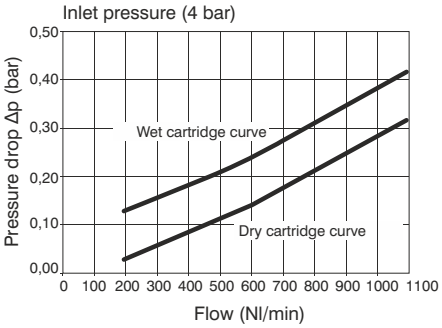

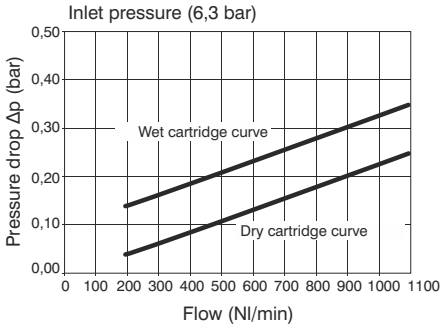

Operational characteristics

- Coalescing filtering cartridge
  particle removal 0,01 μm
  oil residual 0,01 ppm
- Clogging gauge
  green: proper working
  red: clogged cartridge (Δp 0,5 bar)
  we recommend to change the cartridge
- Transparent bowl made off polycarbonate with bowl protection guard.
- Bowl assembly via bayonet type quick coupling mechanism with safety button.
- Automatic drain mounted as standard.

Note

We recommend installing a 5 μm filter upstream of the oil removal filter. In order to ensure adequate flow on the auto drain version it is recommended to use minimum a 6mm fitting.

Technical characteristics

Connections	G 3/8" - G 1/2"
Nominal flow at 6,3 bar	1100 Nl/min
Filter efficiency	99,99%
Max. inlet pressure	13 bar
Minimum working pressure with automatic drain	0,5 bar
Maximum working pressure with automatic drain	10 bar
Working temperature	-5°C +50°C
Weight with Technopolymer threads	gr. 440
Weight with threaded inserts	gr. 460
Bowl capacity	30 cm^3
Assembly positions	Vertical
Max. fitting torque (with Technopolymer threads)	G1/2" = 22 Nm
Max. fitting torque (with threaded inserts)	G3/8" = 25 Nm G1/2" = 30 Nm

Ordering code

Ⓥ173ⒸDBVⓏ

Ⓥ	VERSION
	N = Metal inserts
	T = Technopolymer thread
Ⓒ	CONNECTIONS
	A = G3/8" (only for "N" version)
	B = G1/2"
	C = 1/2 NPT (only for "N" version)
Ⓩ	BOWL OPTIONS
	= Standard *
	N = Nylon bowl

* no additional letter required

High efficiency oil removal filter (DC)

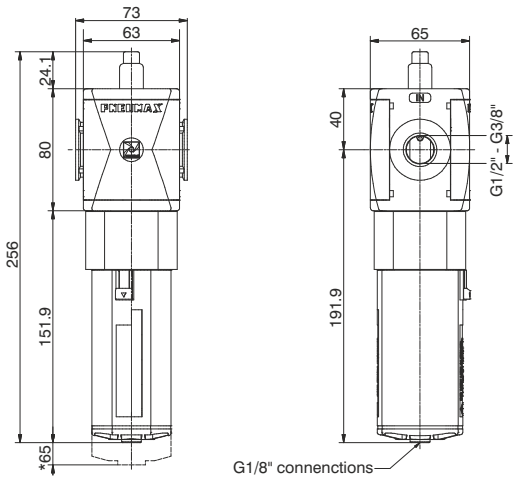

*Bowl removal maximum height

Example: T173BDCV : size 3 High efficiency oil removal filter, with clogging gauge, Technopolymer threads, G1/2" connections.

Efficiency curve

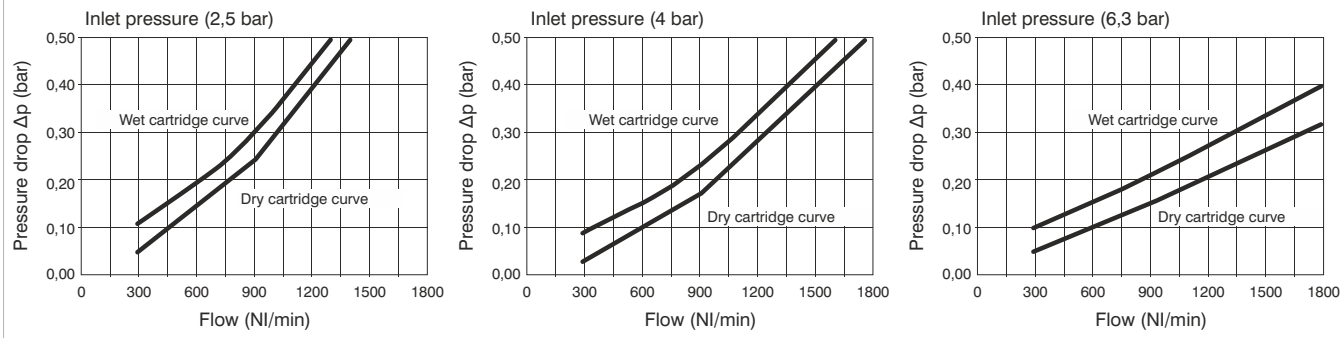

Operational characteristics

- Coalescing filtering cartridge
  particle removal 0,01 μm
  oil residual 0,01 ppm
- Clogging gauge
  green: proper working
  red: clogged cartridge (Δp 0,5 bar)
  we recommend to change the cartridge
- Transparent bowl made off polycarbonate with bowl protection guard.
- Bowl assembly via bayonet type quick coupling mechanism with safety button.
- Automatic drain mounted as standard.

Note

We recommend installing a 5 μm filter upstream of the oil removal filter. In order to ensure adequate flow on the auto drain version it is recommended to use minimum a 6mm fitting.

Technical characteristics

Connections	G 3/8" - G 1/2"
Nominal flow at 6,3 bar	1800 Nl/min
Filter efficiency	99,99%
Max. inlet pressure	13 bar
Minimum working pressure with automatic drain	0,5 bar
Maximum working pressure with automatic drain	10 bar
Working temperature	-5°C +50°C
Weight with Technopolymer threads	gr. 640
Weight with threaded inserts	gr. 660
Bowl capacity	30 cm^3
Assembly positions	Vertical
Max. fitting torque (with Technopolymer threads)	G1/2" = 22 Nm
Max. fitting torque (with threaded inserts)	G3/8" = 25 Nm G1/2" = 30 Nm

Ordering code

Ⓥ173ⒸDCVⓏ

Ⓥ	VERSION
	N = Metal inserts
	T = Technopolymer thread
Ⓒ	CONNECTIONS
	A = G3/8"(only for "N" version)
	B = G1/2"
	C = 1/2 NPT(only for "N" version)
Ⓩ	BOWL OPTIONS
	= Standard *
	N = Nylon bowl

* no additional letter required

Carbon filter (DD)

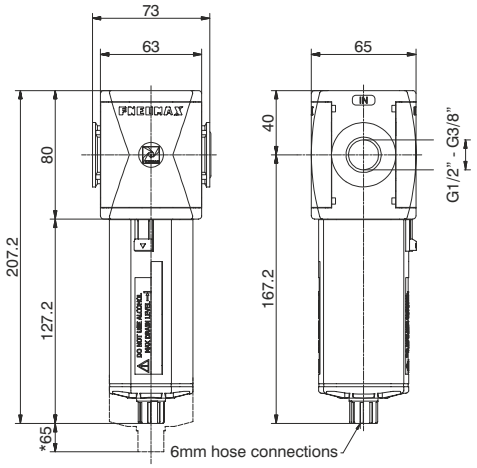

*Bowl removal maximum height

Example : T173BDD : size 3 Carbon filter, Technopolymer threads, G1/2" connections.

Efficiency curve

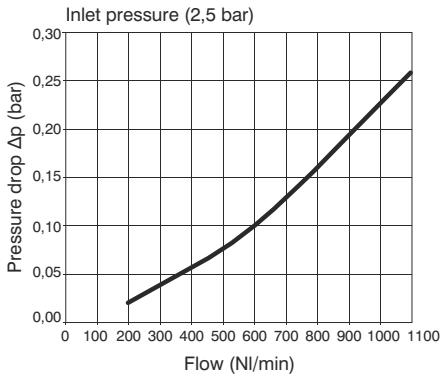

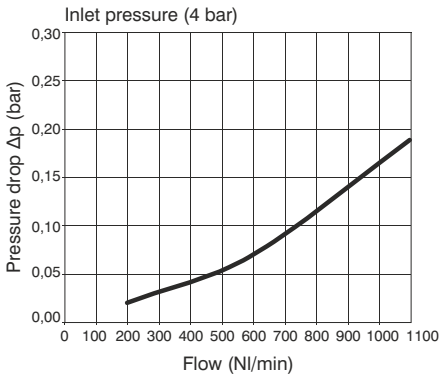

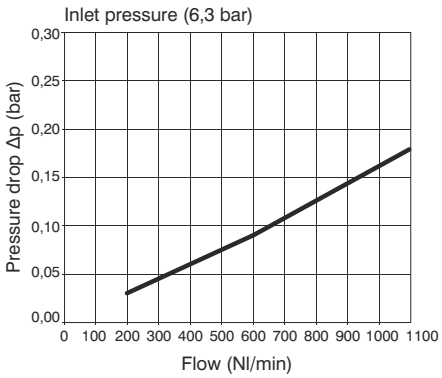

Operational characteristics

- Active carbon cartridge with built in particulate filter. Used to remove oil vapours, hydrocarbons, odours and particles coming from the compressed air lines or gasses in industrial applications. Oil residue up to <0,003 ppm (max imput aereosol 0.01ppm).
- Innovative filtering technology; high absorption capacity, with low differential pressure.
- Transparent bowl made off polycarbonate with bowl protection guard.
- Bowl assembly via bayonet type quick coupling mechanism with safety button.
- Semi-automatic drain mounted as standard.

Note

A 5 micron filter followed by a coalescing filter must be installed before the Oil removal filter in order to ensure the correct functionality of the unit and to safeguard the life of the active carbon cartridge. It is also necessary to preventively replace the cartridges at fixed intervals.

Technical characteristics

Connections	G 3/8" - G 1/2"
Nominal flow at 6,3 bar	1100 Nl/min
Cartridge life	2000 hours
Max. inlet pressure	13 bar
Working temperature	-5°C +50°C
Weight with Technopolymer threads	gr. 440
Weight with threaded inserts	gr. 460
Bowl capacity	30 cm^3
Assembly positions	Vertical
Max. fitting torque (with Technopolymer threads)	G1/2" = 22 Nm
Max. fitting torque (with threaded inserts)	G3/8" = 25 Nm G1/2" = 30 Nm

Ordering code

Ⓥ173ⒸDDⓏ

Ⓥ	VERSION
	N = Metal inserts
	T = Technopolymer thread
Ⓒ	CONNECTIONS
	A = G3/8" (only for "N" version)
	B = G1/2"
	C = 1/2 NPT (only for "N" version)
Ⓩ	BOWL OPTIONS
	= Standard *
	N = Nylon bowl

* no additional letter required

Regulator (R)

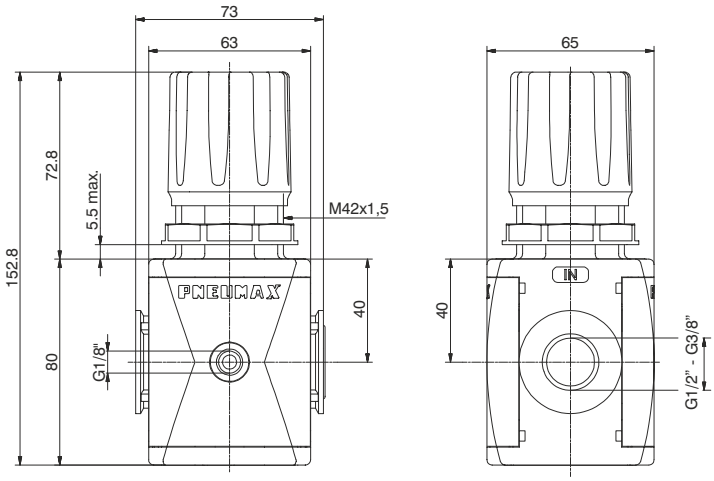

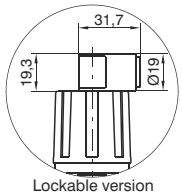

Lockable version
Detail

Example: T173BRC : size 3, Regulator with Technopolymer threads, G1/2" connections, 0 to 8 bar adjusting range

Flow rate curves

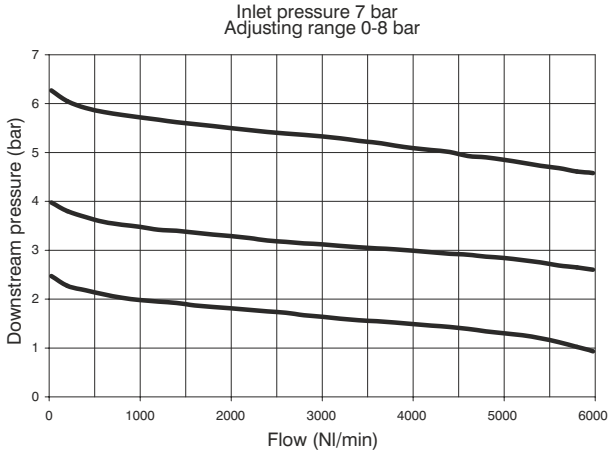

Adjustment characteristics

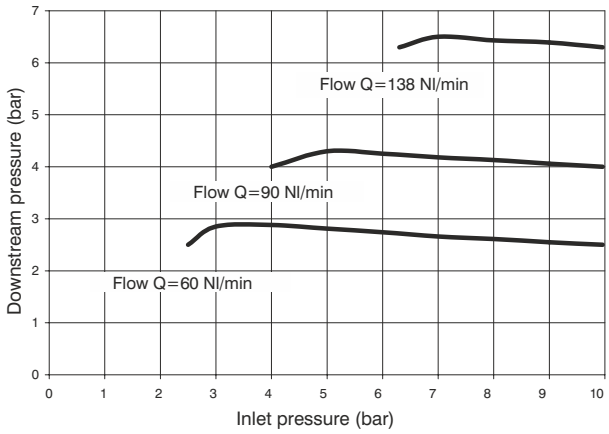

Operational characteristics

- Diaphragm pressure regulator with relieving.
- Low hysteresis rolling diaphragm.
- Balanced system.
- Available in four pressure ranges up to 12 bar.
- Operating knob can be locked in position by pressing it down once the desired P2 (regulated pressure) pressure value is achieved.
- Fitted with panel mounting locking ring.

Note

The pressure must be always regulating while increasing. For a more precise regulation and higher sensibility, the use of a regulator with a pressure range as close as possible to the regulated pressure is recommended.

Technical characteristics

Connections	G 3/8" - G 1/2"
Max. inlet pressure	13 bar
Working temperature	-5°C +50°C
Pressure gauge connections	G 1/8"
Weight with Technopolymer threads	gr. 360
Weight with threaded inserts	gr. 380
Pressure range	0-2 bar / 0-4 bar 0-8 bar / 0-12 bar
Assembly positions	Indifferent
Max. fitting torque (with Technopolymer threads)	G1/8" = 4 Nm G1/2" = 22 Nm
Max. fitting torque (with threaded inserts)	G3/8" = 25 Nm G1/2" = 30 Nm

Ordering code

Ⓥ173ⒸⒼⒼ⒯Ⓞ

Ⓥ	VERSION
	N = Metal inserts
	T = Technopolymer thread
Ⓒ	CONNECTIONS
	A = G3/8" (only for "N" version)
	B = G1/2"
	C = 1/2 NPT (only for "N" version)
Ⓖ	ADJUSTING RANGE
	A = 0-2 bar
	B = 0-4 bar
	C = 0-8 bar
	D = 0-12 bar
Ⓣ	TYPE
	= Standard *
	F = Controlled refiel + improved relieving
	L = no relieving
	R = Improved relieving
Ⓞ	OPTIONS
	= Standard *
	K = Lockable version

* no additional letter required

Regulator including gauge (RM)(RW)

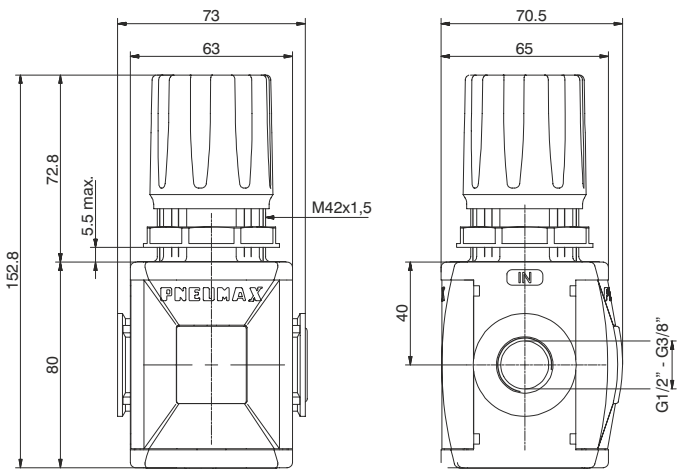

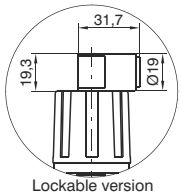

Lockable version
Detail

Example : T173BRMC : size 3, Regulator including gauge with Technopolymer threads, G1/2" connections, 0 to 8 bar adjusting range

Flow rate curves

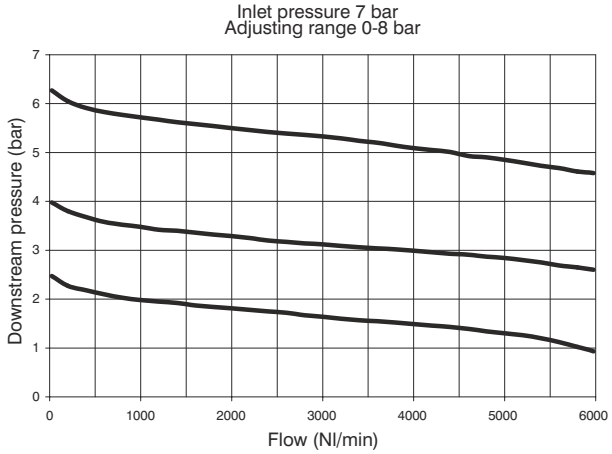

Adjustment characteristics

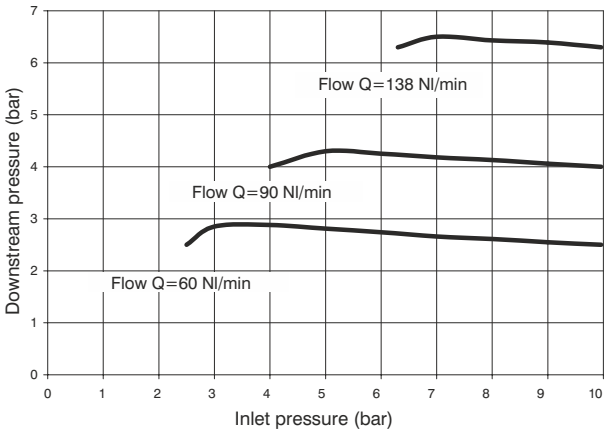

Operational characteristics

- Diaphragm pressure regulator with relieving.
- Low hysteresis rolling diaphragm.
- Balanced system.
- Available in four pressure ranges up to 12 bar.
- Operating knob can be locked in position by pressing it down once the desired P2 (regulated pressure) pressure value is achieved.
- Fitted with panel mounting locking ring.
- Integrated manometer 0-12 bar as standard (for 0-8 and 0-12 bar range) and 0-4 bar (for 0-2 and 0-4 range)

Note

The pressure must be always regulating while increasing. For a more precise regulation and higher sensibility, the use of a regulator with a pressure range as close as possible to the regulated pressure is recommended.

Technical characteristics

Connections	G 3/8" - G 1/2"
Max. inlet pressure	13 bar
Working temperature	-5°C +50°C
Weight with Technopolymer threads	gr. 370
Weight with threaded inserts	gr. 390
Pressure range	0-2 bar / 0-4 bar 0-8 bar / 0-12 bar
Assembly positions	Indifferent
Max. fitting torque (with Technopolymer threads)	G1/2" = 22 Nm
Max. fitting torque (with threaded inserts)	G3/8" = 25 Nm G1/2" = 30 Nm

Ordering code

Ⓥ173ⒸⓇⒹⒼⓉⓄ

Ⓥ	VERSION
	N = Metal inserts
	T = Technopolymer thread
Ⓒ	CONNECTIONS
	A = G3/8" (only for "N" version)
	B = G1/2"
	C = 1/2 NPT (only for "N" version)
Ⓓ	FLOW DIRECTION
	M = from left to right
	W = from right to left
Ⓖ	ADJUSTING RANGE
	A = 0-2 bar
	B = 0-4 bar
	C = 0-8 bar
	D = 0-12 bar
Ⓣ	TYPE
	= Standard *
	F = Controlled refiel + improved relieving
	L = no relieving
	R = Improved relieving
Ⓞ	OPTIONS
	= Standard *
	K = Lockable version

* no additional letter required

Filter-Regulator (E)

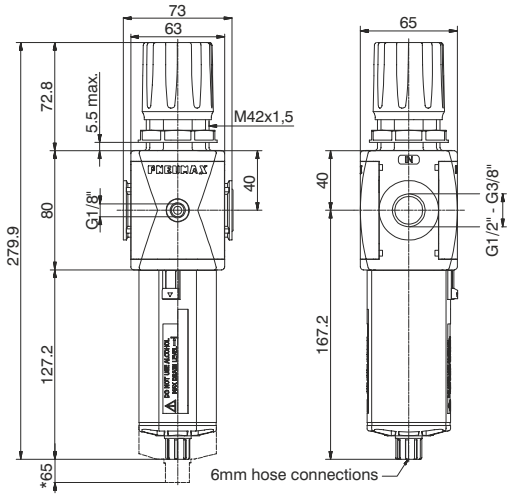

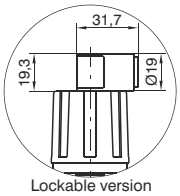

Example : T173BEBC : size 3, Filter-regulator with Technopolymer threads, G1/2" connections, 20 μm filtering pore size, 0 to 8 bar adjusting range

Flow rate curves

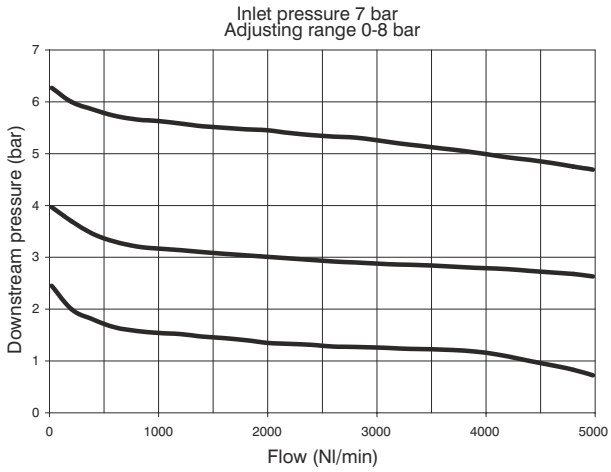

Adjustment characteristics

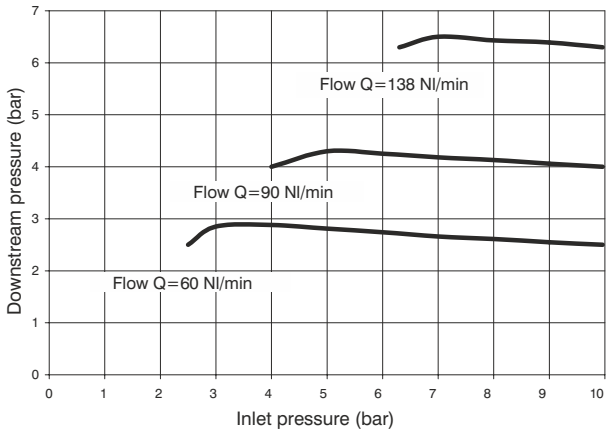

Operational characteristics

- Filter - diaphragm pressure regulator with relieving.
- Low hysteresis rolling diaphragm.
- Balanced system.
- Double filtering action: air flow centrifugation and filter element.
- Filtering element made of HDPE (high density polyethylene) available in three different filtration grades (5μm, 20μm and 50μm) can be regenerated by washing it or replaced.
- Transparent bowl made off polycarbonate with bowl protection guard.
- Bowl assembly via bayonet type quick coupling mechanism with safety button.
- Semi-automatic drain mounted as standard; automatic drain upon request.
- Available in four pressure ranges up to 12 bar.
- Operating knob can be locked in position by pressing it down once the desired P2 (regulated pressure) pressure value is achieved.
- Fitted with panel mounting locking ring.

Note

The pressure must be always regulating while increasing. For a more precise regulation and higher sensibility, the use of a regulator with a pressure range as close as possible to the regulated pressure is recommended. In order to ensure adequate flow on the auto drain version it is recommended to use minimum a 6mm fitting.

Technical characteristics

Connections	G 3/8" - G 1/2"
Max. inlet pressure	13 bar
Minimum working pressure with automatic drain	0,5 bar
Maximum working pressure with automatic drain	10 bar
Working temperature	-5°C +50°C
Pressure gauge connections	G 1/8"
Weight with Technopolymer threads	gr. 470
Weight with threaded inserts	gr. 490
Pressure range	0-2 bar / 0-4 bar 0-8 bar / 0-12 bar
Filter pore size	5 μm - 20 μm - 50 μm
Bowl capacity	68 cm^3
Assembly positions	Vertical
Max. fitting torque (with Technopolymer threads)	G1/8" = 4 Nm G1/2" = 22 Nm
Max. fitting torque (with threaded inserts)	G3/8" = 25 Nm G1/2" = 30 Nm

Ordering code

Ⓥ173ⒸEⓈⒼⓉⓄⓏ

Ⓥ	VERSION
	N = Metal inserts
	T = Technopolymer thread
Ⓒ	CONNECTIONS
	A = G3/8" (only for "N" version)
	B = G1/2"
	C = 1/2 NPT (only for "N" version)
Ⓢ	FILTER PORE SIZE
	A = 5 μm
	B = 20 μm
	C = 50 μm
Ⓖ	ADJUSTING RANGE
	A = 0-2 bar
	B = 0-4 bar
	C = 0-8 bar
	D = 0-12 bar
Ⓣ	TYPE
	= Standard *
	S = Automatic drain
Ⓞ	OPTIONS
	= Standard *
	K = Lockable version
Ⓩ	BOWL OPTIONS
	= Standard *
	N = Nylon bowl

* no additional letter required

3

Filter-regulator including gauge (EM)(EW)

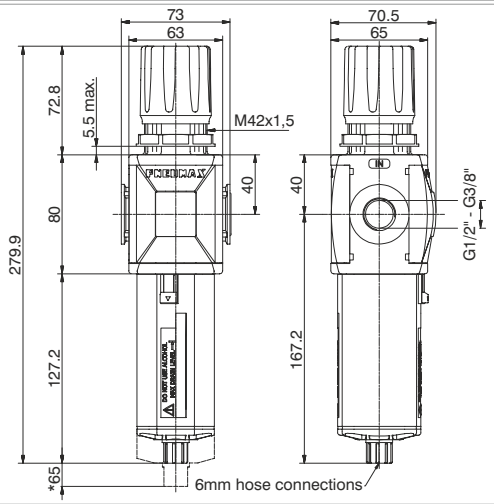

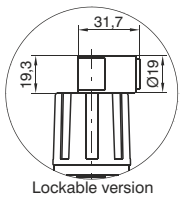

Lockable version
Detail

Example: T173BEMBC : size 3, Filter-Regulator including gauge with Technopolymer threads, G1/2" connections, with 20 μm filtering pore size, 0 to 8 bar adjusting range

Flow rate curves

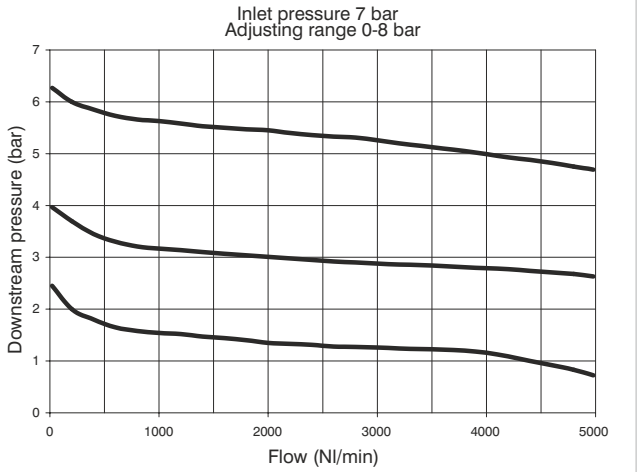

Adjustment characteristics

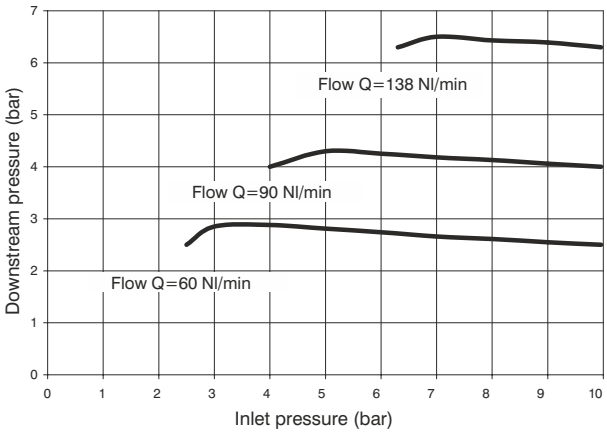

Operational characteristics

- Filter - diaphragm pressure regulator with relieving.
- Low hysteresis rolling diaphragm.
- Balanced system.
- Double filtering action: air flow centrifugation and filter element.
- Filtering element made of HDPE (high density polyethylene) available in three different filtration grades (5μm, 20μm and 50μm) can be regenerated by washing it or replaced.
- Transparent bowl made of polycarbonate with bowl protection guard.
- Bowl assembly via bayonet type quick coupling mechanism with safety button.
- Semi-automatic drain mounted as standard; automatic drain upon request.
- Available in four pressure ranges up to 12 bar.
- Operating knob can be locked in position by pressing it down once the desired P2 (regulated pressure) pressure value is achieved.
- Fitted with panel mounting locking ring.
- Integrated manometer 0-12 bar as standard (for 0-8 and 0-12 bar range) and 0-4 bar (for 0-2 and 0-4 range)

Note

The pressure must be always regulating while increasing. For a more precise regulation and higher sensibility, the use of a regulator with a pressure range as close as possible to the regulated pressure is recommended. In order to ensure adequate flow on the auto drain version it is recommended to use minimum a 6mm fitting.

Technical characteristics

Connections	G 3/8" - G 1/2"
Max. inlet pressure	13 bar
Minimum working pressure with automatic drain	0,5 bar
Maximum working pressure with automatic drain	10 bar
Working temperature	-5°C +50°C
Weight with Technopolymer threads	gr. 480
Weight with threaded inserts	gr. 500
Pressure range	0-2 bar / 0-4 bar 0-8 bar / 0-12 bar
Filter pore size	5 μm - 20 μm - 50 μm
Bowl capacity	68 cm^3
Assembly positions	Vertical
Max. fitting torque (with Technopolymer threads)	G1/2" = 22 Nm
Max. fitting torque (with threaded inserts)	G3/8" = 25 Nm G1/2" = 30 Nm

Ordering code

V173CEDSGTOZ

V	VERSION
	N = Metal inserts
	T = Technopolymer thread
C	CONNECTIONS
	A = G3/8" (only for "N" version)
	B = G1/2"
	C = 1/2 NPT (only for "N" version)
D	FLOW DIRECTION
	M = from left to right
	W = from right to left
S	FILTER PORE SIZE
	A = 5 μm
	B = 20 μm
	C = 50 μm
G	ADJUSTING RANGE
	A = 0-2 bar
	B = 0-4 bar
	C = 0-8 bar
	D = 0-12 bar
T	TYPE
	= Standard *
	S = Automatic drain
O	OPTIONS
	= Standard *
	K = Lockable version
Z	BOWL OPTIONS
	= Standard *
	N = Nylon bowl

* no additional letter required

Regulator with pressure switch (RP)(RZ)

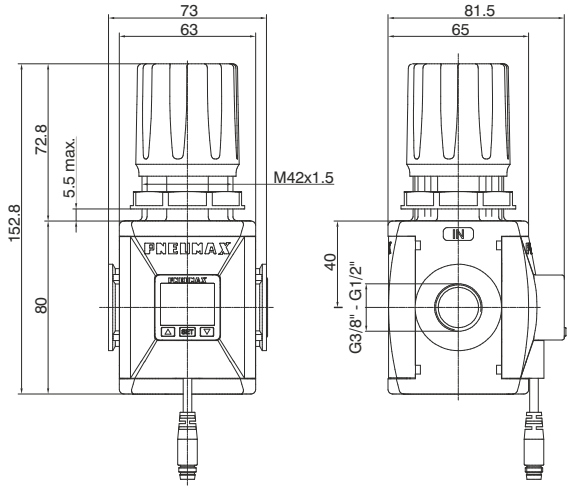

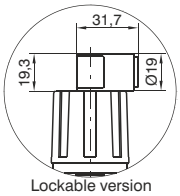

Lockable version
Detail

Example : T173BRPCA : size 3, Regulator with Technopolymer threads, G1/2" connections, 0 to 8 bar adjusting range, with pressure switch with M8 connector PNP

Flow rate curves

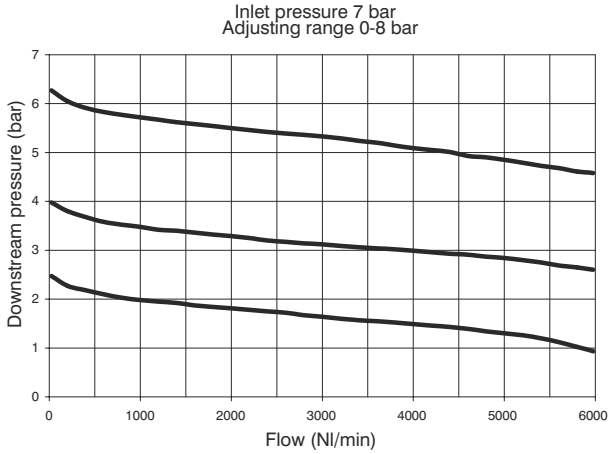

Adjustment characteristics

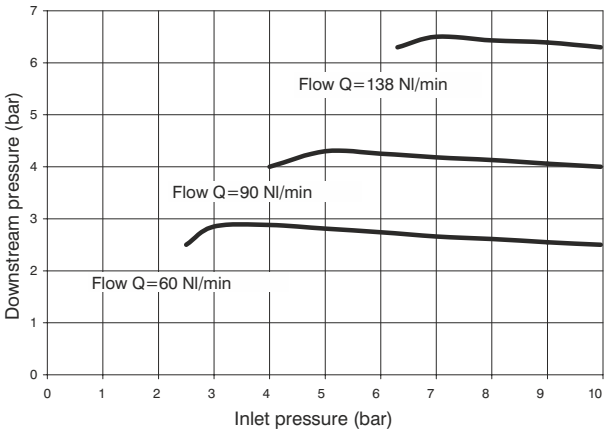

Operational characteristics

- Diaphragm pressure regulator with relieving.
- Low hysteresis rolling diaphragm.
- Balanced system.
- Available in four pressure ranges up to 12 bar.
- Operating knob can be locked in position by pressing it down once the desired P2 (regulated pressure) pressure value is achieved.
- Fitted with panel mounting locking ring.
- Pressure switch as standard

Note

The pressure must be always regulating while increasing. For a more precise regulation and higher sensibility, the use of a regulator with a pressure range as close as possible to the regulated pressure is recommended.

Technical characteristics

Connections	G 3/8" - G 1/2"
Max. inlet pressure	13 bar
Working temperature	0°C +50°C
Weight with Technopolymer threads	gr. 370
Weight with threaded inserts	gr. 390
Pressure range	0-2 bar / 0-4 bar 0-8 bar / 0-12 bar
Assembly positions	Indifferent
Max. fitting torque (with Technopolymer threads)	G1/2" = 22 Nm
Max. fitting torque (with threaded inserts)	G3/8" = 25 Nm G1/2" = 30 Nm

Ordering code

Ⓥ173ⒸⒹⒼ⒯⒪Ⓟ

Ⓥ	VERSION
	N = Metal inserts
	T = Technopolymer thread
Ⓒ	CONNECTIONS
	A = G3/8"(only for "N" version)
	B = G1/2"
	C = 1/2 NPT(only for "N" version)
Ⓓ	FLOW DIRECTION
	P = from left to right
	Z = from right to left
Ⓖ	ADJUSTING RANGE
	A = 0-2 bar
	B = 0-4 bar
	C = 0-8 bar
	D = 0-12 bar
Ⓣ	TYPE
	= Standard *
	F = Controlled refiel + improved relieving
	L = no relieving
	R = Improved relieving
Ⓞ	OPTIONS
	= Standard *
	K = Lockable version
Ⓟ	PRESSURE SWITCH OPTION
	A = Cable 150 mm+M8 PNP
	B = Cable 150 mm+M8 NPN
	C = Cable 2 mt. PNP
	D = Cable 2 mt. NPN

* no additional letter required

Filter regulator with pressure switch (EP)(EZ)

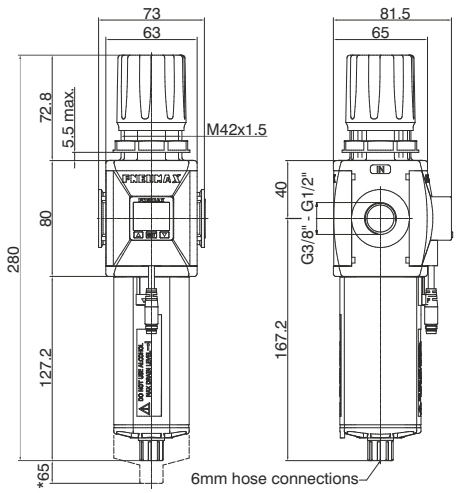

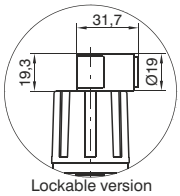

Lockable version
Detail

* Bowl removal maximum height

Example: T173BEPBCA : size 3, Filter-regulator with Technopolymer threads, G1/2" connections, 20 μm filtering pore size, 0 to 8 bar adjusting range, with pressure switch with M8 connector PNP

Flow rate curves

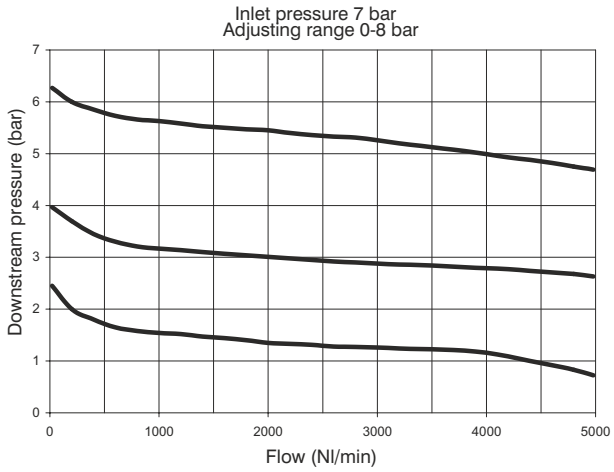

Adjustment characteristics

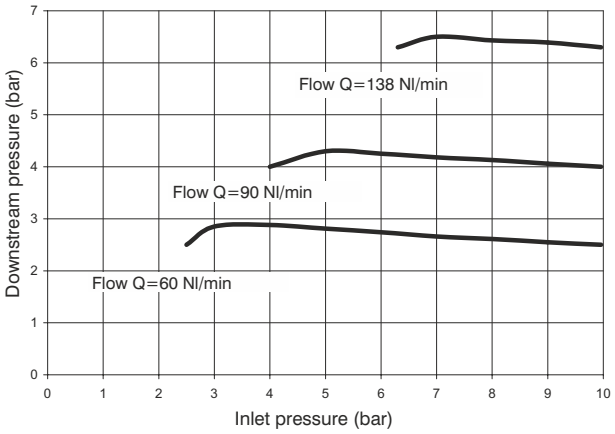

Operational characteristics

- Filter - diaphragm pressure regulator with relieving.
- Low hysteresis rolling diaphragm.
- Balanced system.
- Double filtering action: air flow centrifugation and filter element.
- Filtering element made of HDPE (high density polyethylene) available in three different filtration grades (5μm, 20μm and 50μm) can be regenerated by washing it or replaced.
- Transparent bowl made off polycarbonate with bowl protection guard.
- Bowl assembly via bayonet type quick coupling mechanism with safety button.
- Semi-automatic drain mounted as standard; automatic drain upon request
- Available in four pressure ranges up to 12 bar.
- Operating knob can be locked in position by pressing it down once the desired P2 (regulated pressure) pressure value is achieved.
- Fitted with panel mounting locking ring.
- Pressure switch as standard

Note

The pressure must be always regulating while increasing. For a more precise regulation and higher sensibility, the use of a regulator with a pressure range as close as possible to the regulated pressure is recommended. In order to ensure adequate flow on the auto drain version it is recommended to use minimum a 6mm fitting.

Technical characteristics

Connections	G 3/8" - G 1/2"
Max. inlet pressure	13 bar
Minimum working pressure with automatic drain	0,5 bar
Maximum working pressure with automatic drain	10 bar
Working temperature	0°C +50°C
Weight with Technopolymer threads	gr. 480
Weight with threaded inserts	gr. 500
Pressure range	0-2 bar / 0-4 bar 0-8 bar / 0-12 bar
Filter pore size	5 μm - 20 μm - 50 μm
Bowl capacity	68 cm^3
Assembly positions	Vertical
Max. fitting torque (with Technopolymer threads)	G1/2" = 22 Nm
Max. fitting torque (with threaded inserts)	G3/8" = 25 Nm G1/2" = 30 Nm

Ordering code

V173CEDSGTOPZ

V	VERSION
	N = Metal inserts
	T = Technopolymer thread
C	CONNECTIONS
	A = G3/8" (only for "N" version)
	B = G1/2"
	C = 1/2 NPT (only for "N" version)
D	FLOW DIRECTION
	P = from left to right
	Z = from right to left
S	FILTER PORE SIZE
	A = 5 μm
	B = 20 μm
	C = 50 μm
G	ADJUSTING RANGE
	A = 0-2 bar
	B = 0-4 bar
	C = 0-8 bar
	D = 0-12 bar
T	TYPE
	= Standard *
	S = Automatic drain
O	OPTIONS
	= Standard *
	K = Lockable version
P	PRESSURE SWITCH OPTION
	A = Cable 150 mm+M8 PNP
	B = Cable 150 mm+M8 NPN
	C = Cable 2 mt. PNP
	D = Cable 2 mt. NPN
Z	BOWL OPTIONS
	= Standard *
	N = Nylon bowl

* no additional letter required

CHARACTERISTICS

- 3 color digital LCD display, easy readout
- 4 units of measurement for pressure indication
- PNP and NPN output
- N.O. and N.C. output contact
- Not available individually, but only with a Regulator or a Filter-regulator

OUTPUT CIRCUIT WIRING DIAGRAMS

PNP output

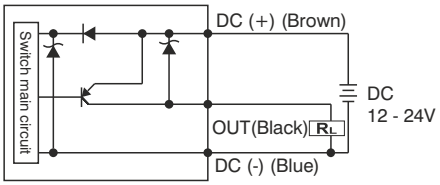

NPN output

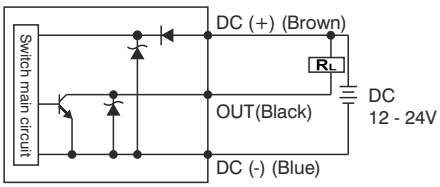

M8 CONNECTOR PIN LAY OUT

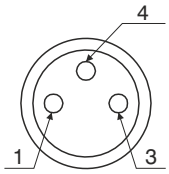

1 : (+)
3 : (-)
4 : (OUT)

3 WIRES CABLE LAY OUT

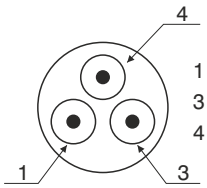

1 : Brown (+)
3 : Blue (-)
4 : Black (OUT)

Cable ordering code

MCH1	cable 3 wires l=2,5m with M8 connector
MCH2	cable 3 wires l=5m with M8 connector
MCH3	cable 3 wires l=10m with M8 connector

Connector

TECHNICAL CHARACTERISTICS	
Adjusting range	0 - 10 bar / 0 - 1MPa
Max. inlet pressure	15 bar / 1,5 MPa
Fluid	Filtered and dehumidified air
Display unit of measurement	MPa - kgf/cm² - bar - psi
Supply voltage	12 - 24 VDC
Current consumption	≤40mA (without load)
Digital output type	NPN - PNP
Type of contact	Normally Open - Normally Closed
Max. load current	125 mA
Digital output activation mode	single threshold with fixed hysteresis - window with fixed hysteresis - window without hysteresis
Digital output activation time	0.05s - 0.25s - 0.5s - 1s - 2s - 3s (selections for chattering-proof function)
Display characteristics	Double 3 1/2 digit display Digital output status indication Three-pushbuttons touchpad
Indicator accuracy	≤±2% F.S. ± 1 digit
Protection grade	IP 40
Temperature	0 - 50 °C
Cable section	3 x 0,129mm², Ø4 mm, PVC

Lubricator (L)

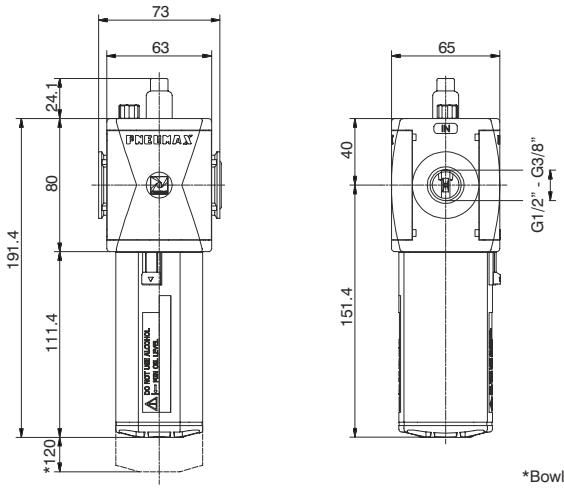

*Bowl removal maximum height

Example : T173BL : size 3, Lubricator with Technopolymer threads, G1/2" connections

Flow rate curves

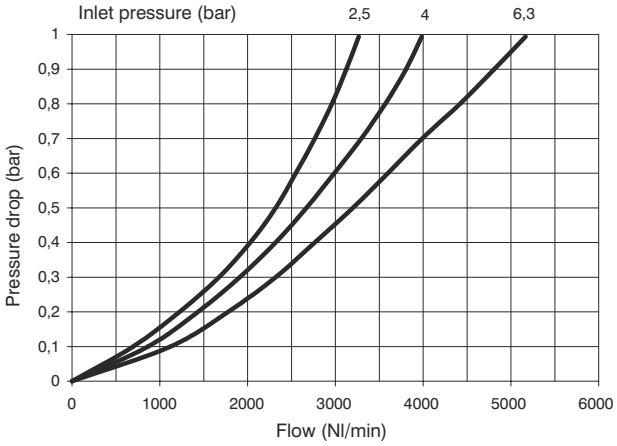

Operational characteristics

- Oil mist lubrication with variable orifice size in function of the flow rate
- Oil quantity regulation mechanism and oil quantity visualization dome made of polycarbonate.
- Transparent bowl made off polycarbonate with bowl protection guard.
- Bowl assembly via bayonet type quick coupling mechanism with safety button.
- Oil filling plug
- Oil can be refilled with pressurized circuit.
- Available with electric min-level sensor N.O. or N.C. with connection for connector.
- For electrical connection use connectors type C1-C2-C3 (see sensors chapter in the catalogue).

Note

Install as close as possible to the point o fuse
Do not use alcohol, deterging oils or solvents.

Technical characteristics

Connections	G 3/8" - G 1/2"
Max. inlet pressure	13 bar
Working temperature	-5°C +50°C
Weight with Technopolymer threads	gr. 290
Weight with threaded inserts	gr. 310
Indicative oil drop rate	1 drop every 300/600 Nl
Oil type	FD22 - HG32
Bowl capacity	136 cm^3
Assembly positions	Vertical
Max. fitting torque (with Technopolymer threads)	G1/2"= 22 Nm
Max. fitting torque (with threaded inserts)	G3/8" = 25 Nm G1/2" = 30 Nm
Min. operational flow at 6,3 bar	100 Nl/min.

Ordering code

Ⓥ173ⒸLⓄⓏ

Ⓥ	VERSION
	N = Metal inserts
	T = Technopolymer thread
Ⓒ	CONNECTIONS
	A = G3/8"(only for "N" version)
	B = G1/2"
	C = 1/2 NPT(only for "N" version)
Ⓞ	OPTIONS
	A = Min. Oil level indicator Normally open
	C = Min. Oil level indicator Normally closed
Ⓩ	BOWL OPTIONS
	= Standard *
	N = Nylon bowl

* no additional letter required

Shut-off valve (VL)

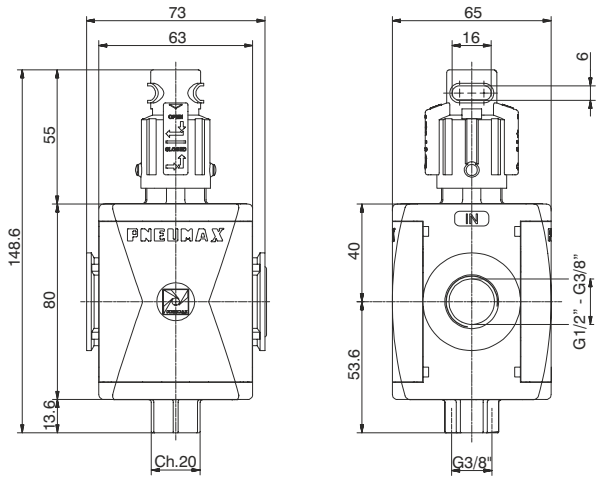

Example: T173BVL : size 3, Shut-off valve with Technopolymer threads, G1/2" connections

Operational characteristics

- Manual operated 3 ways poppet valve.
- Double handle action for valve opening: pushing and rotating (clockwise).
- The valve can be closed and the down stream circuit depressurized by rotating anticlockwise the knob.
- Knob lockable with three padlocks.

Technical characteristics

Connections	G 3/8" - G 1/2"
Max. inlet pressure	13 bar
Discharge connection	G3/8"
Working temperature	-5°C +50°C
Weight with Technopolymer threads	gr. 230
Weight with threaded inserts	gr. 250
Assembly positions	Indifferent
Handle opening and closing angle	90°
Max. fitting torque (with Technopolymer threads)	G1/2" = 22 Nm
Max. fitting torque (with threaded inserts)	G3/8" = 25 Nm G1/2" = 30 Nm
Nominal flow rate at 6 bar with Δp=1	3600 Nl/min.
Exhaust nominal flow rate at 6 bar with Δp=1	1500 Nl/min.

Ordering code

Ⓥ173ⒸVL

Ⓥ	VERSION
	N = Metal inserts
	T = Technopolymer thread
Ⓒ	CONNECTIONS
	A = G3/8"(only for "N" version)
	B = G1/2"
	C = 1/2 NPT(only for "N" version)

3

Pneumatic shut-off valve (VP)

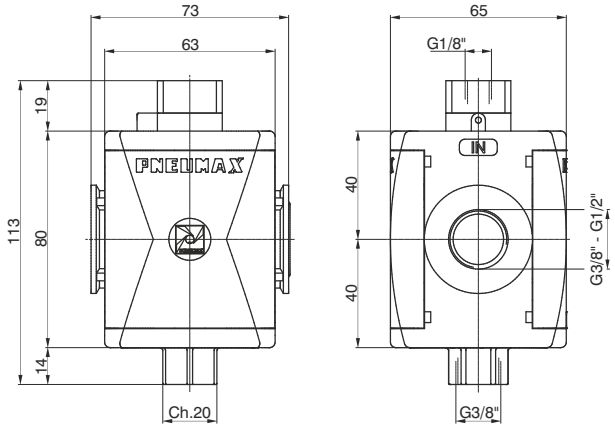

Example: T173BVP : size 3, Pneumatic shut-off valve with Technopolymer threads, G1/2" connections

Operational characteristics

- Pneumatic operated 3 ways poppet valve.
- When the pneumatic signal is removed the valves exhaust the pneumatic circuit

Technical characteristics

Connections	G 3/8” - G 1/2”
Discharge connection	G3/8"
Pilot port size	G1/8"
Working temperature	-5°C +50°C
Weight with technopolymer threads	gr. 254
Weight with threaded inserts	gr. 270
Assembly positions	Indifferent
Min. pressure working	2,5 bar
Max. pressure working	10 bar
Max. fitting torque (with Technopolymer threads)	G1/2" = 22 Nm
Max. fitting torque (with threaded inserts)	G3/8" = 25 Nm G1/2" = 30 Nm
Nominal flow rate at 6 bar with Δp=1	3600 Nl/min.
Exhaust nominal flow rate at 6 bar with Δp=1	1500 Nl/min.

Ordering code

Ⓥ173ⒸVP

Ⓥ	VERSION
	N = Metal inserts
	T = Technopolymer thread
Ⓒ	CONNECTIONS
	A = G3/8"(only for "N" version)
	B = G1/2"
	C = 1/2 NPT(only for "N" version)

3

Electric shut-off valve (VE)

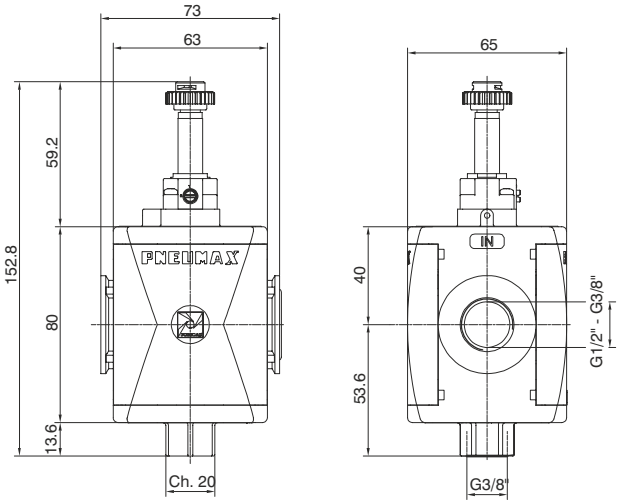

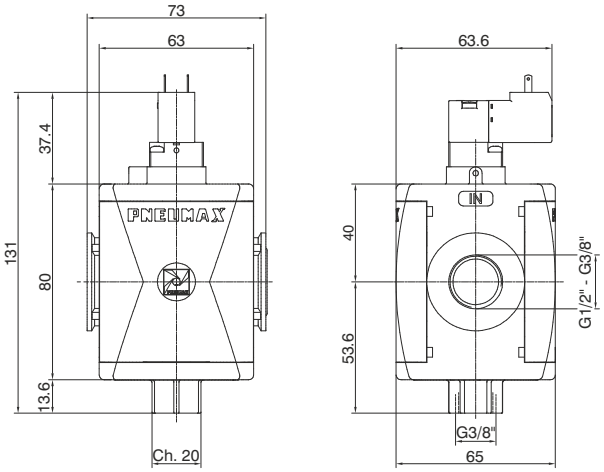

Example : T173BVEB2 : size 3, Electric shut-off valve, with M2 Pilot without coil, Technopolymer threads, G1/2" connections

Operational characteristics

- Solenoid operated 3 ways poppet valve.
- The model fitted with 15 mm pilots uses pilots series N33_0A and N33_0E (1 Watt)

Technical characteristics

Supply and operating connections	G 3/8" - G 1/2"
Discharge connections	G 3/8"
Working temperature	-5°C +50°C
Weight with Technopolymer threads	290 g
Weight with threaded inserts	310 g
Assembly positions	Indifferent
Min. Pressure working	2,5 bar
Max. Pressure working	10 bar
Max. fitting torque (with Technopolymer threads)	G1/2" = 22 Nm
Max. fitting torque (with threaded inserts)	G3/8" = 30 Nm G1/2" = 25 Nm
Nominal flow rate at 6 bar with Δp=1	3600 Nl/min.
Exhaust nominal flow rate at 6 bar with Δp=1	1500 Nl/min.

Ordering code

Ⓥ173ⒸVEⒶ

Ⓥ	VERSION
	N = Metal inserts
	T = Technopolymer thread
Ⓒ	CONNECTIONS
	A = G3/8"(only for "N" version)
	B = G1/2"
	C = 1/2 NPT(only for "N" version)
Ⓐ	15 mm COIL VOLTAGE
	A4 = 12 V DC
	A5 = 24 V DC
	A6 = 24 V AC (50-60 Hz)
	A7 = 110 V AC (50-60 Hz)
	A8 = 230 V AC (50-60 Hz)
	A9 = 24 V DC (1 Watt)
	22 mm COIL VOLTAGE
	B2 = Without coil M2 mechanic
	B4 = 12 V DC
	B5 = 24 V DC
	B6 = 24 V AC (50-60 Hz)
	B7 = 110 V AC (50-60 Hz)
	B8 = 230 V AC (50-60 Hz)
	B9 = 24 V DC (2 Watt)
	30 mm COIL VOLTAGE
	C5 = 24 V DC
	C6 = 24 V AC (50-60 Hz)
	C7 = 110 V AC (50-60 Hz)
	C8 = 230 V AC (50-60 Hz)
	C9 = 24 V DC (2 Watt)

General

Upon implementation of the AIRPLUS TG3 series, air-treatment units, PNEUMAX develops a supply and discharge valve, with an electropneumatic control and spring-return, fitted with a diagnostic system regarding the state of the valve, with the possibility of creating a double channel to determine the system´s redundancy. The valve, as a safety feature, provides the interruption of the air supply and the exhaust of the air circuit it is connected to. The version with one single channel emphasises the features of an EV 3/2 NC, monostable with electropneumatic control and spring-return, whose operation involves:
- condition of the VALVE AT REST, with a DE-ENERGISED coil; Port 1 (air supply) is not been connected to Port 2 (downstream air circuit). Port 2 is discharged out of Port 3;
- condition of the VALVE ACTIVATED, with an ENERGISED coil; Port 1 (air supply) is connected to Port 2 (downstream air circuit), with Port 3 (Discharge) closed.

By de-energising the coil, the system resets the condition of VALVE AT REST by means of the return spring, which repositions the spool. Once again Port 2 (downstream air circuit), discharges via Port 3. The state of the valve is constantly monitored by a diagnostic system, using a Hall effect sensor, which reads the position of the spool and consequently takes note of the valve´s position.
The sensor is in the ON position when the valve is at rest (DE-ENERGISED coil), while it is in the OFF position when the valve is activated (ENERGISED coil).
The sensor is in the OFF position under conditions of an activated valve (DE-ENERGISED coil), indicating a possible problem.
The SAFELINE supply and discharge valve in the single version is a classified component in CATEGORY 2 according to ISO EN 13849 and is appropriate for use in safety circuits until PL=C.

The version with a double redundant channel is made using two single solenoid valves 3/2 NC provided with diagnostics, mounted in series so that the Port 2 of the first solenoid valve is linked to the Port 1 of the second solenoid valve. It is sufficient that only one of the EV is de-energised to guarantee the discharge of the air circuit. If one of the two EV must remain blocked due to a malfunction, the other one ensures the discharge function of the pneumatic installation. Even in this case, the diagnostic system of both solenoid valves constantly monitors the state of the 2 single EV.
The SAFELINE supply and discharge valve in the double version is a classified component in CATEGORY 4 according to ISO EN 13849 and is appropriate for use in safety circuits until PL=E.

Both single and double solenoid valves are provided with the following certifications released by BUREAU VERITAS:
- TYPE APPROVAL certificate according to the EN ISO 13849 regulations
- certification of examination of compliance in accordance to the machinery directive 2006/42/CE

The AIRPLUS SAFELINE are solenoid valves marked as ATEX → **II 3G Ex nA IIC T6 Gc (X)**
II 3D Ex tc IIIC T=80°C Dc (X) IP65

3

Construction characteristics

Body	Aluminium
Solenoid Operator	Technopolymer
Rear end cap	Aluminium
Spool	Aluminium
Spool seals	Polyurethane
Piston	Aluminium
Spring	EN 10270-1 DH Steel
Electrical Interface	Male M12 4 PIN TYPE A Connector

Operational characteristics

Fluid	filtered and lubricated or non-lubricated air; if lubricated it must be continuous
Working Temperature	-10°C ÷ +50°C
Working Pressure, MIN	2,5 bar
Working Pressure, MAX	10 bar

Assembly and Installation:

Undertake the installation respecting the safety requirements with regards to the system and components for hydraulic and pneumatic transmissions. Install the device as close as possible to the point of use. Its assembly is possible in any position. Pay attention to the flow direction, indicated on the main body with the labels IN and OUT. During the components discharge, high levels of noise occur. The use of a silencer on the discharge port is recommended. Ensure there is sufficient space for assembly during the installation process. Please ensure that the discharge area is always clear, and in case a silencer is used, periodically verify that it is not obstructed. It is possible to integrate and install the device in an existing AIRPLUS group or in a new installation, or else to use the device individually attaching it by aligning the assembled unit with the relevant fastening flange for the supply and discharge valve, or to use the device individually attaching it by aligning the assembled unit with the type "Y" fastening flange for the double supply and discharge valve.

WARNING!
Pay particular attention to external factors such as the nearness of live wires, magnetic fields, metallic objects providing magnetic conduction very close to the device, which may influence and disturb the diagnostic system.

WARNING!
The electrical connection must be made exclusively by specialized personnel, using components that have no voltage present. Only use power supplies which can guarantee a safe electrical isolation of the working voltage in accordance to IEC/EN 60204-1.
Additionally, observe the requirements anticipated by the PELV circuits in accordance to IEC/EN 60204-1.

CARE AND MAINTENANCE:

WARNING!
Do not connect or disconnect the device when energised! Do not open and/or disassemble the parts that are included in the energised valve. Once the power supply is disconnected, wait for a few minutes before opening or disassembling parts of the valve that result in its disassembly.

Before carrying out any operation, it is essential to remove the pneumatic and power supply to the device and wait for the residual pressure to be completely discharged. Please ensure that the discharge is always clear, and in case a silencer is used, periodically verify that it is not obstructed. Periodically remove any dust deposits from the valve using a damp cloth. Use soapy water to clean the device. Do not use corrosive or alcohol-based products.
For maintenance operations on internal components, please consult with PNEUMAX SPA.

Regulatory framework

The purpose of the EU´s Machinery Directive is to define the health and safety requirements in the framework of designing and constructing machinery. Since 2009, the new Machinery Directive has become effective in the European Union. Member countries of the EU are required to implement this standard. The manufacturers of machinery can comply with the Machinery Directive applying the harmonised standards listed in the Official Journal of the European Union.

The design and manufacture of safety controls are developed in compliance with one of the two important harmonised standards:

UNI EN ISO 13849-1
Safety of machinery Safety-related parts of control systems Part 1: General design principles

EN 62061
Safety of machinery Functional safety of electrical, electronic and programmable control systems regarding safety

The UNI EN ISO 13849-1 standard is one of the most important harmonised standards, which has been widely used; it is intended to provide a guide to principles for design and integration of safety-related parts of the control system.

Each safety-related control system must be designed and constructed in accordance with the principles of ISO 12100 and ISO 14121 by which the possible risks are considered and assessed, in view of the intended uses and the reasonably anticipated incorrect uses.

The parts of a machinery´s control system are called “Safety-related parts of control systems”. Their capacity to perform a safety function under predictable conditions is assigned by means of five possible levels called **"performance levels" (PL).**
These levels are defined in terms of probability of dangerous malfunction per hour.

PL – Performance Level	Average probability of dangerous malfunction per hour (1/h)
a	$\geq 10^{-5}$ to $< 10^{-4}$
b	$\geq 3x10^{-6}$ to $< 10^{-4}$
c	$\geq 10^{-6}$ to $< 3x10^{-6}$
d	$\geq 10^{-7}$ to $< 10^{-6}$
e	$\geq 10^{-8}$ to $< 10^{-10}$

The calculated PL must be greater or equal to the necessary value, which arises from the calculation of the risk correlated to one single function and to the need to reduce it to an acceptable level.

S1 Slight danger	**F1** Occasional danger and brief exposure	**P1** – possibly avoidable danger	**PL = a**
		P2 – largely unavoidable danger	**PL = b**
	F2 Frequent danger and long exposure	**P1** – possibly avoidable danger	
		P2 – largely unavoidable danger	**PL = c**
S2 Serious danger	**F1** Occasional danger and brief exposure	**P1** – possibly avoidable danger	**PL = d**
		P2 – largely unavoidable danger	
	F2 Frequent danger and long exposure	**P1** – possibly avoidable danger	
		P2 – largely unavoidable danger	**PL = e**

ATEX CE Ex
II 3G Ex nA IIC T6 Gc (X)
II 3D Ex tc IIIC T=80°C Dc (X) IP65

Pneumatic symbol

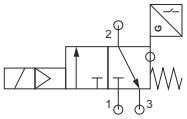

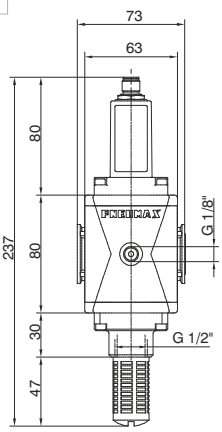

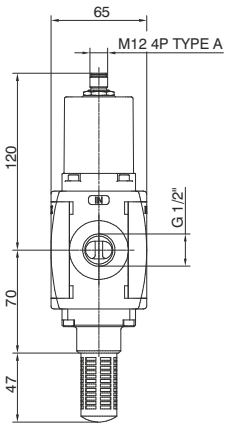

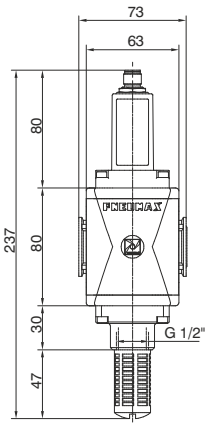

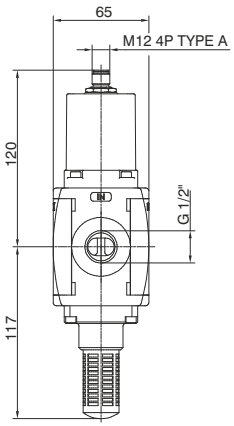

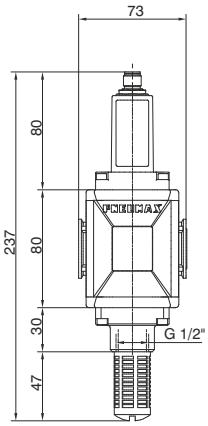

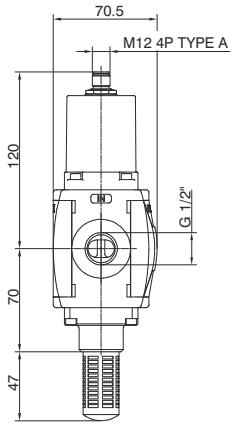

Dimensions with fixing bracket mounted

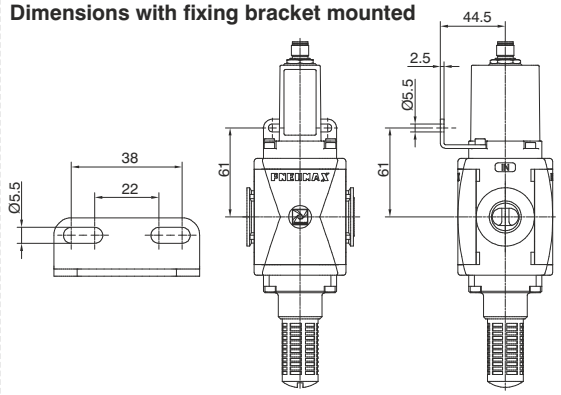

Electrical Connection

PIN	DESCRIPTION
1	+ 24 VDC (Sensor)
2	+ 24 VDC (EV)
3	GND (Sensor + EV)
4	SENSOR OUTPUT

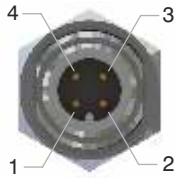

Electrical Features	
Electrical Connection	Male M12 4 PIN TYPE A Connector
Coil Features	24VDC, 1 Watt
Suppressor diode for coil reverse voltage spike	Present
Supply Voltage Allowance	-5% ÷ +10%
Electrical features of sensor	
Sensor Features	10 ÷ 30V DC
Operating Principle	Hall effect
Contact Type	N.O.
Output Type	PNP
Permanent Maximum Current	100 mA
Permanent Maximum Power	3 Watt
Voltage Drop, MAX	2 V
Safety features	
Regulatory Compliance	EN ISO 13849-1
Safety Function Fulfiled	Interruption of supply and unloading of the downstream pneumatic circuit
Performance Level (PL)	c
UNI EN 13849 Category	2
Safety Integrity Level (SIL)	1
PFH_D	$1,7*10^{-6}$
CE Marking	In accordance with the EU Machinery Directive, annex V

Technical Features	
Connections	G1/2" UNI-ISO 228/1
Fluid	filtered and lubricated or non-lubricated air; if lubricated it must be continuous
Function	3/2 NC monostable
Working Pressure, MIN	2,5 bar
Working Pressure, MAX	10 bar
Working Temperature	-10°C ÷ +50°C
Flow rate at 6bar Δp1 (from 1 to 2)	3500 NL/min
Flow rate at 6bar Δp1 (from 2 to 3)	2000 NL/min
Flow rate at 6bar (from 2 to 3) with free discharge	3800 NL/min
Type of Installation	In line
Mounting Position	Indifferent
Noise Level	90 dB
Response Time ON ISO 12238	36 ms
Response Time OFF ISO 12238	76 ms
IP Rating	IP65 (with connector installed)

Ordering code

N173BVSⓋⒻ

Ⓥ	VERSIONS
	= Standard* (without connections)
	M= Incorporated pressure gauge
	W= Incorporated pressure gauge (Right-Left)
	G= G1/8" pressure gauge Connection
Ⓕ	FIXINGS
	= Without fixing *
	01= Fixing bracket mounted (Left-Right)
	02= Fixing bracket mounted (Right-Left)

* no additional letter required

Installation tip of a safety system by means of a Single valve

Please note: the safety valve is not sufficient alone to guarantee the safety function.
Its setup requires the use of a monitoring device.

In this setup, the SIEMENS® 3SK1112-1BB40 monitoring device has been indicated, activated by an S2 start / reset pushbutton, blocked by an S1 emergency shutdown key.
Said monitoring device, by means of the readings of the sensor placed inside the valve (reading made by means of the K1 relay), operates the activation of the valve itself.
The monitoring device transmits the safety status as an output.
The preliminary estimate and the final verification of the achieved PL are the responsibility of the designer of the part of the system dedicated to providing the safety function.
Note: with a single valve, it is not possible to obtain a PL greater than "c".

Setup suggestions

- The double stop pushbutton is connected to clamps T1-IN1 and T2-IN2 of 3SK1112-1BB40.
- The start / reset pushbutton is connected between +24 V and the INS clamp of 3SK1112-1BB40.
- The valve is supplied between 0 V (Pin 3 of the supply connector) and the 14 clamp of 3SK1112-1BB40 (Pin 2 of the supply connector).
- The HALL effect sensor is supplied between 0 V (Pin 3 of the supply connector) and 24 V (Pin 1 of the supply connector).
- The HALL effect sensor drives (Pin 4 of the supply connector) the K1 relay, whose N.A. contact will be connected between the monitoring device´s clamp T2 and INF.

The circuit diagram of the **suggested** configuration is provided, along with the configuration of 3SK1112-1BB40.

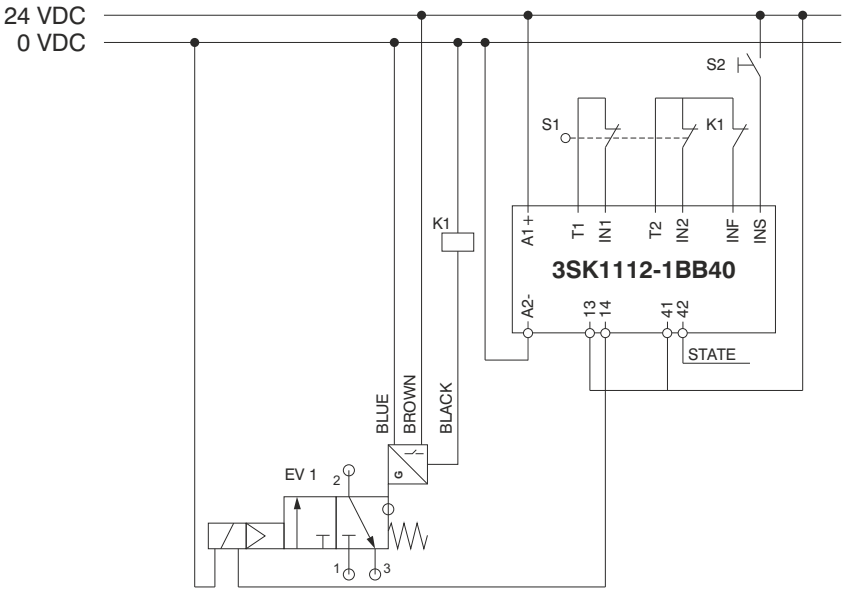

3SK1112-1BB40 Configuration

■	1 Autostart / Monitored Start
■	2 Cross fault detection OFF / ON
■	3 2 single-ch. sensors / 1 double-ch. sensor
■	4 Startup test YES / NO

Analysis of malfunctions

The diagnostic system (monitoring device plus sensor) has the purpose of verifying the appearance of malfunctions within the valve that undermine the safety function. In particular, (with 3SK1112-1BB40 configured as in the illustration), the K1 relay prevents resetting the system by means of S2 when the coil is de-energised, but the sensor remains in the OFF position (K1 remains de-energised).

ATEX CE Ex
II 3G Ex nA IIC T6 Gc (X)
II 3D Ex tc IIIC T=80°C Dc (X) IP65

Pneumatic symbol

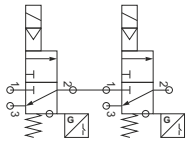

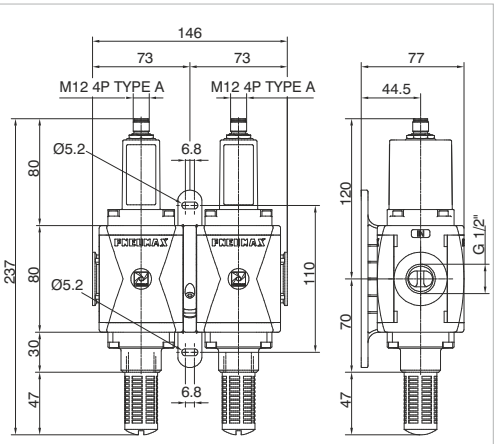

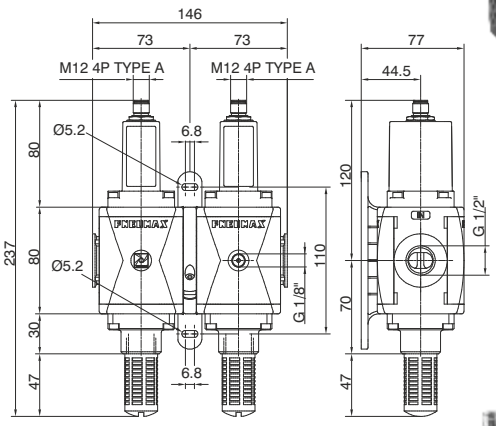

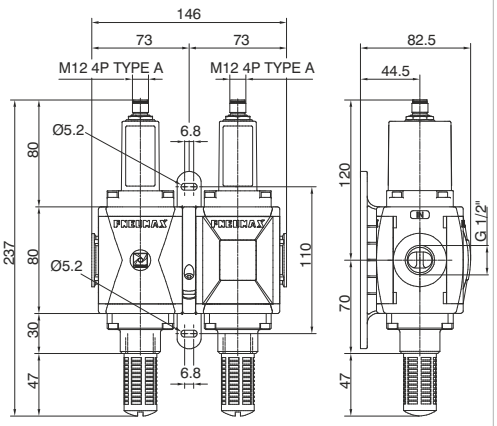

3

Electrical Connection

PIN	DESCRIPTION
1	+ 24 VDC (Sensor)
2	+ 24 VDC (EV)
3	GND (Sensor + EV)
4	SENSOR OUTPUT

Electrical Features	
Electrical Connection	Male M12 4 PIN TYPE A Connector
Coil Features	24VDC, 1 Watt +1 Watt
Suppressor diode for coil reverse voltage spike	Present
Supply Voltage Allowance	-5% ÷ +10%
Electrical features of sensor	
Sensor Features	10 ÷ 30V DC
Operating Principle	Hall effect
Contact Type	N.O.
Output Type	PNP
Permanent Maximum Current	100 mA + 100 mA
Permanent Maximum Power	3 Watt + 3 Watt
Voltage Drop, MAX	2 V + 2 V
Safety features	
Regulatory Compliance	EN ISO 13849-1
Safety Function Fulfiled	Interruption of supply and unloading of the downstream pneumatic circuit
Performance Level (PL)	e
UNI EN 13849 Category	4
Safety Integrity Level (SIL)	3
PFH_D	$4{,}7*10^{-8}$
CE Marking	In accordance with the EU Machinery Directive, annex V

Technical Features	
Connections	G1/2" UNI-ISO 228/1
Fluid	filtered and lubricated or non-lubricated air; if lubricated it must be continuous
Function	3/2 NC monostable
Working Pressure, MIN	2,5 bar
Working Pressure, MAX	10 bar
Working Temperature	-10°C ÷ +50°C
Flow rate at 6bar Δp1 (from 1 to 2)	2500 NL/min
Flow rate at 6bar Δp1 (from 2 to 3)	2000 NL/min
Flow rate at 6bar (from 2 to 3) with free discharge	3800 NL/min
Type of Installation	In line
Mounting Position	Indifferent
Noise Level	90 dB
Response Time ON ISO 12238	68 ms
Response Time OFF ISO 12238	79 ms
IP Rating	IP65 (with connector installed)

Ordering code	
N173BV2SⓋⒻⒹ	
Ⓥ	VERSIONS
	= Standard* (without connections)
	M= Incorporated pressure gauge
	G= G1/8" pressure gauge Connection
Ⓕ	FIXING
	X= "X" Flange
	Y= "Y" Flange
	K= "Y" Aluminium flange
Ⓓ	FLOW RATE DIRECTION
	= Standard (Left-Right)*
	W= (Right-Left)

* no additional letter required

Installation tip of a safety system by means of a Double valve

Please note: the safety valve is not sufficient alone to guarantee the safety function.
Its setup requires the use of a monitoring device.

In this setup, the SIEMENS 3SK2112 monitoring device has been indicated, activated by an S2 start / reset pushbutton, blocked by an S1 emergency shutdown key.
Said monitoring device, by means of the readings of the sensors placed inside the double valve, operates the activation of the valve itself.
The preliminary estimate and the final verification of the achieved PL are the responsibility of the designer of the part of the system dedicated to providin the safety function.

Setup suggestions

- The double stop pushbutton is connected to clamps T1-F-IN1 and T2-F-IN2 of 3SK2112.
- The start /reset pushbutton is connected between +24 V and the F-IN10 clamp of 3SK2112.

The double valve, for notation simplicity, is indicated as consisting of 2 valves: EV1 and Ev2

EV1
- The valve is supplied between 0 V (Pin 3 of the supply connector) and the F-Q1 clamp of 3SK2112 (Pin 2 of the supply connector).
- The HALL effect sensor is supplied between 0 V (Pin 3 of the supply connector) and 24 V (Pin 1 of the supply connector).
- The HALL effect sensor is attached (Pin 4 of the supply connector) to the monitoring device´s F-IN3 clamp.

EV2
- The valve is supplied between 0 V (Pin 3 of the supply connector) and the F-Q2 clamp of 3SK2112 (Pin 2 of the supply connector).
- The HALL effect sensor is supplied between 0 V (Pin 3 of the supply connector) and 24 V (Pin 1 of the supply connector).
- The HALL effect sensor is attached (Pin 4 of the supply connector) to the monitoring device´s F-IN4 clamp.

The circuit diagram of the **suggested** configuration is provided.

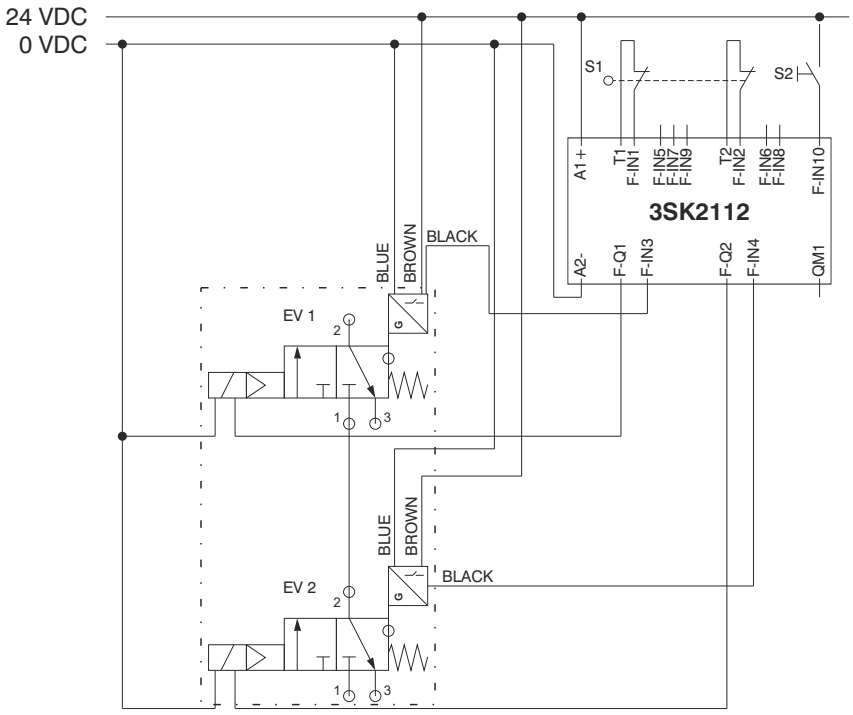

Analysis of malfunctions

The diagnostic system (monitoring device plus sensors) has the purpose of verifying the appearance of malfunctions within the valves, which undermine the safety function. In particular, the monitoring device must be appropriately programmed to avoid the system´s reset by means of S2 when both coils are de-energised and at least one sensor remains in an OFF position.

Progressive start-up valve (AP)

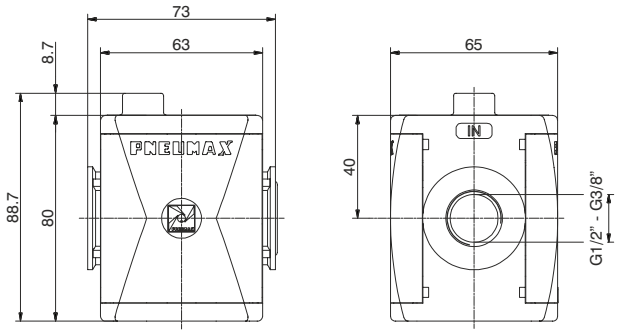

Example : T173BAP : size 3, Progressive start-up valve with Technopolymer threads, G1/2" connections

Operational characteristics

- Down stream circuit filling time regulated via a built in flow regulator.
- Full pressure is allowed once the down stream circuit pressure reaches 50% of the inlet pressure.

Technical characteristics

Connections	G 3/8" - G 1/2"
Max. inlet pressure	13 bar
Working temperature	-5°C +50°C
Weight with Technopolymer threads	gr. 220
Weight with threaded inserts	gr. 240
Max. fitting torque (with Technopolymer threads)	G1/2" = 22 Nm
Max. fitting torque (with threaded inserts)	G3/8" = 25 Nm G1/2" = 30 Nm
Assembly positions	Indifferent
Min. pressure working	2,5 bar
Nominal flow rate at 6 bar with Δp=1	3600 Nl/min.
Fully open built in flow regulator flow rate	200 Nl/min.

Ordering code

Ⓥ173ⒸAP

Ⓥ	VERSION
	N = Metal inserts
	T = Technopolymer thread
Ⓒ	CONNECTIONS
	A = G3/8"(only for "N" version)
	B = G1/2"
	C = 1/2 NPT(only for "N" version)

Air intake (PA)

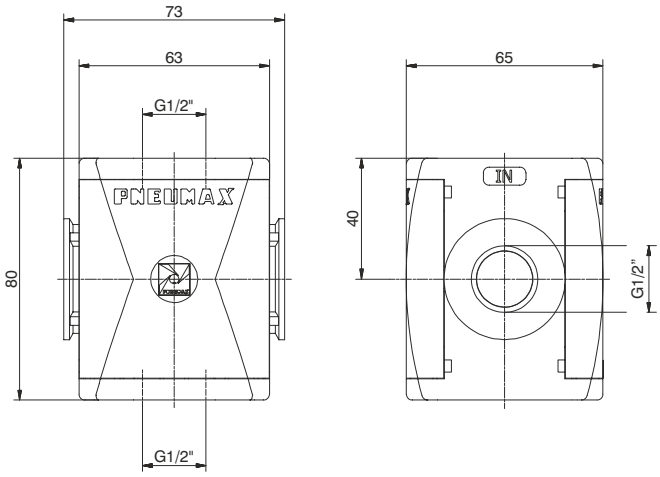

Example : T173BPA : size 3, Air intake with Technopolymer threads, G1/2" connections

Operational characteristics

- Available with two G1/2" threaded connections.

Attention
For this product are available only Technopolymer connections

Technical characteristics

Connections	G 1/2"
Max. inlet pressure	13 bar
Working temperature	-5°C +50°C
Weight	gr. 151
Assembly positions	Indifferent
Max. fitting torque (with Technopolymer threads)	G1/2" = 22 Nm

Ordering code

T173BPA

Pressure switch (PP)

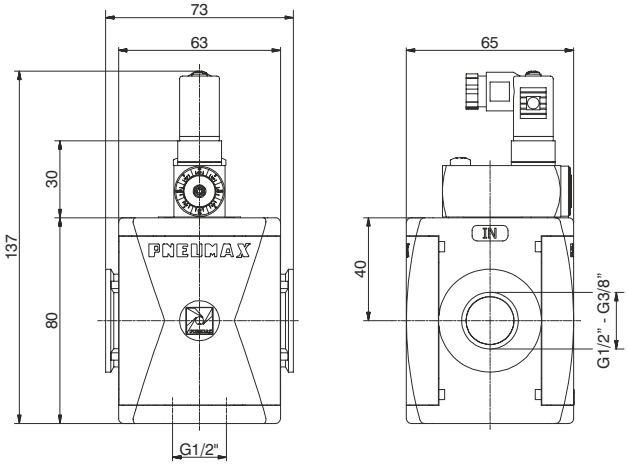

Example: T173BPP : Size 3, Pressure switch with Technopolymer threads, G1/2" connections

Operational characteristics

- Built in adjustable pressure switch (2 to 10 bar) with electrical connection.
- G 1/2” threaded connection on the bottom face.
- The electrical connection is made by mean of a 15 mm connector DIN 43650 type C. The microswitch contact could be normally closed or open (change overswitch).

Attention
For this product are available only Technopolymer connections

Technical characteristics

		Ordering code
Connections	G 1/2”	
Max. inlet pressure	13 bar	**T173BPP**
Working temperature	-5°C +50°C	
Weight	gr. 235	
Microswitch capacity	1A	
Grade of protection (with connector assembled)	IP 65	
Adjusting range	2-10 bar	
Assembly positions	Indifferent	
Max. fitting torque (with Technopolymer threads)	G1/2" = 22 Nm	
Microswitch maximum tension	250 VAC	

Connection

1 = neutral
2 = N.C. contact
3 = N.O. contact

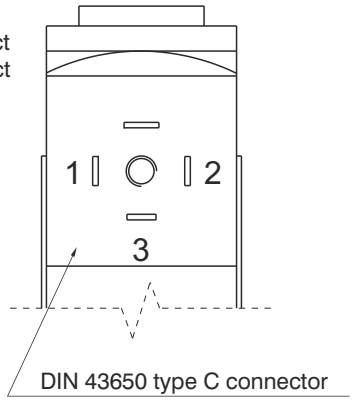

Flange X

Ordering code
T173X

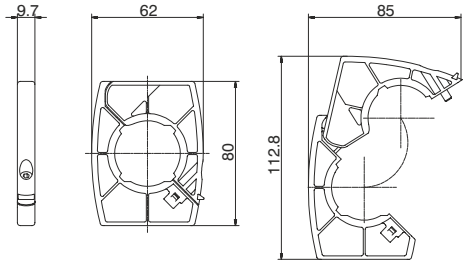

Weight 35 gr.
Example : T173X : Size 3 coupling flange
- Enables the quick connnection of two functions.

Flange Y

Ordering code
T173Y

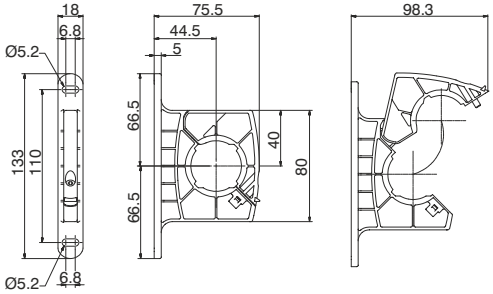

Single unit panel mounting dimensions

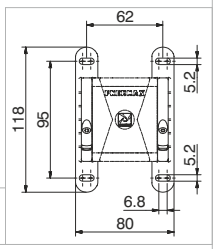

Weight 48 gr.
Example : T173Y : Size 3 coupling flange with mounting holes
- Used to couple together two elements and to panel mount them.
- Used to panel mount one single element.

Aluminium flange Y

Ordering code
N173Y

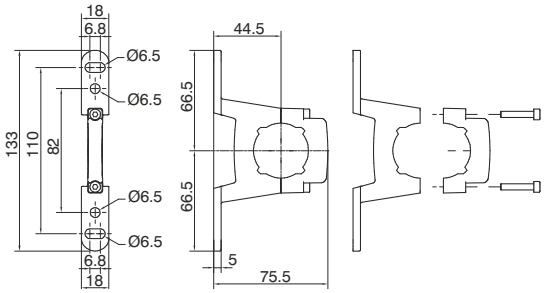

Single unit panel mounting dimensions

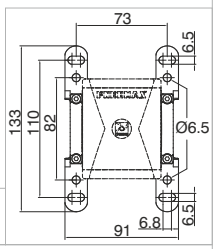

Weight 71 gr.
Example : N173Y : Size 3 coupling aluminium flange with mounting holes
- Used to couple together two elements and to panel mount them.
- Used to panel mount one single element.

Fixing bracket

Ordering code
T17250

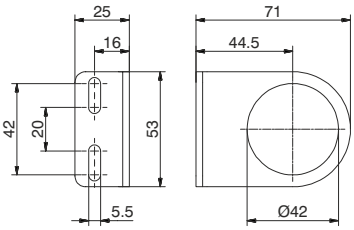

Weight 71 gr.
- Allows for regulators and filter regulators to be panel mounted.

Pressure gauge

Ordering code
17070Ⓥ.Ⓢ

Ⓥ	VERSION
	A = Dial Ø40
	B = Dial Ø50
Ⓢ	SCALE
	A = Scale 0-4 bar
	B = Scale 0-6 bar
	C = Scale 0-12 bar

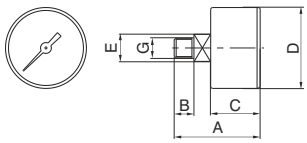

DIMENSIONS

CODE	A	B	C	D	E	G	Weight gr.
17070A	44	10	26	41	14	1/8"	60
17070B	45	10	27	49	14	1/8"	80

Service unit assembled (EM+L) (E+L) (EW+L)

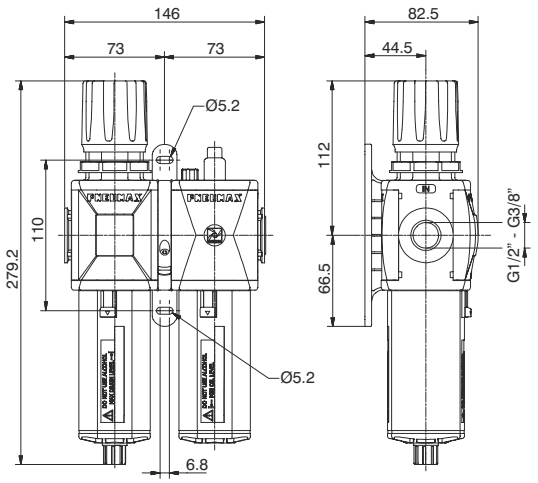

Example : GT173BHG : size 3, combined group comprising Filter-regulator and Lubricator, Technopolymer threads, G1/2" connections, 0 to 8 bar adjusting range and 20 μm filter pore size

Flow rate curves

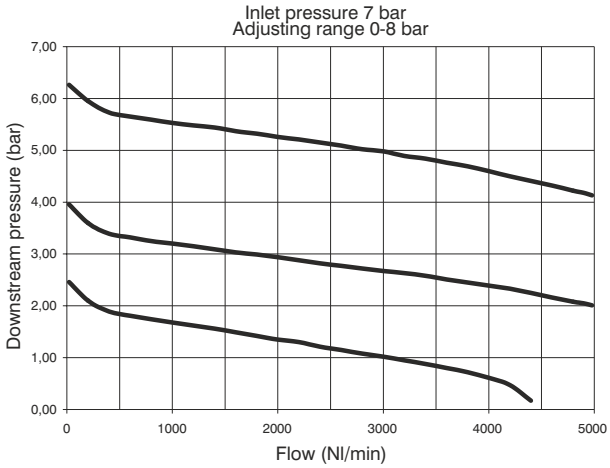

Adjustment characteristics

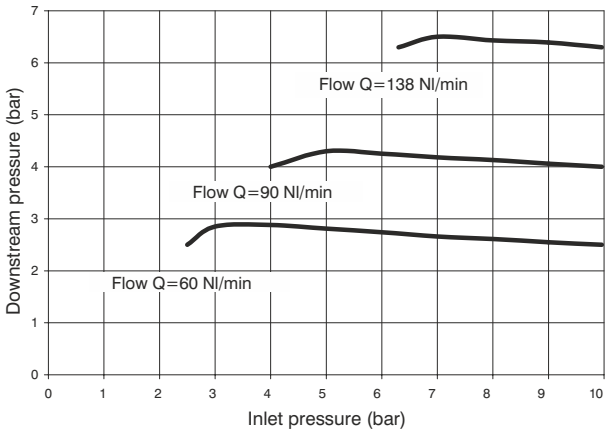

Operational characteristics

Combined group comprising Filter-regulator with built in manometer and Lubricator assembled with a (Y) type coupling kit for panel mounting.
Integrated manometer 0-12 bar as standard (for 0-8 and 0-12 bar range) and 0-4 bar (for 0-2 and 0-4 range)

Note

The pressure must be always regulating while increasing. For a more precise regulation and higher sensibility, the use of a regulator with a pressure range as close as possible to the regulated pressure is recommended.

Technical characteristics

Connections	G 3/8" - G 1/2"
Max. inlet pressure	13 bar
Working temperature	-5°C +50°C
Weight with Technopolymer threads	gr. 809
Weight with threaded inserts	gr. 849
Pressure range	0-2 bar / 0-4 bar 0-8 bar / 0-12 bar
Filter pore size	5 μm - 20 μm - 50 μm
Bowl capacity	68 cm^3
Indicative oil drop rate	1 drop every 300/600 Nl
Oil type	FD22 - HG32
Bowl capacity	136 cm^3
Assembly positions	Vertical
Max. fitting torque (with Technopolymer threads)	G1/2" = 22 Nm
Max. fitting torque (with threaded inserts)	G3/8" = 25 Nm G1/2" = 30 Nm
Min. operational flow at 6,3 bar	100 Nl/min.

Ordering code

G Ⓥ 173 Ⓒ Ⓣ Ⓢ Ⓞ Ⓓ Ⓩ

Ⓥ	VERSION
	N = Metal inserts
	T = Technopolymer thread
Ⓒ	CONNECTIONS
	A = G3/8" (only for "N" version)
	B = G1/2"
	C = 1/2 NPT (only for "N" version)
Ⓣ	TYPE
	H = Built in gauge
	J = G1/8" gauge connection
Ⓢ	FILTER PORE SIZE ADJUSTING RANGE
	C = 5 μm / 0-8 bar
	D = 5 μm / 0-12 bar
	G = 20 μm / 0-8 bar
	H = 20 μm / 0-12 bar
	N = 50 μm / 0-8 bar
	P = 50 μm / 0-12 bar
Ⓞ	OPTIONS
	= Standard *
	A = Min.oil level indicator NO
	C = Min.oil level indicator NC
	S = Automatic drain
	SA = Automatic drain + Min.oil level indicator NO
	SC = Automatic drain + Min.oil level indicator NC
Ⓓ	FLOW DIRECTION
	= Standard (from left to right)
	W = from right to left
Ⓩ	BOWL OPTIONS
	= Standard *
	N = Nylon bowl

* no additional letter required

Service unit assembled (F+RM+L) (F+R+L) (F+RW+L)

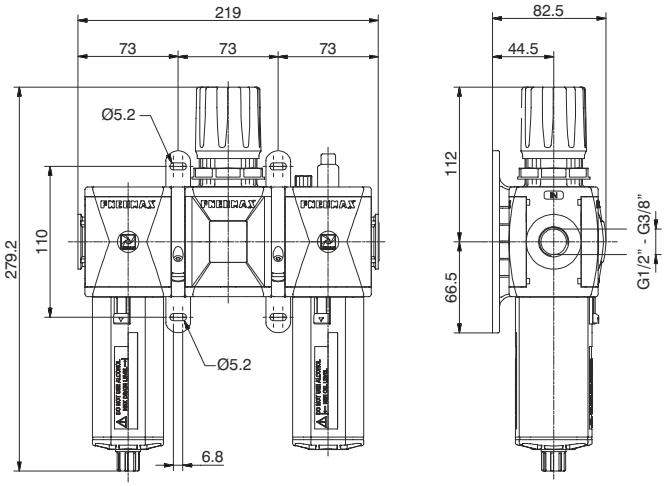

Example : GT173BKG : size 3 combined group comprising Filter, Regulator and Lubricator Technopolymer threads, G1/2" connections, 0 to 8 bar adjusting range and 20 μm filter pore size

Flow rate curves

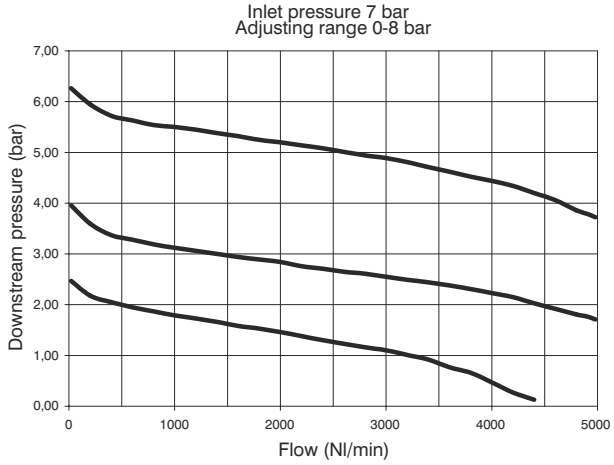

Adjustment characteristics

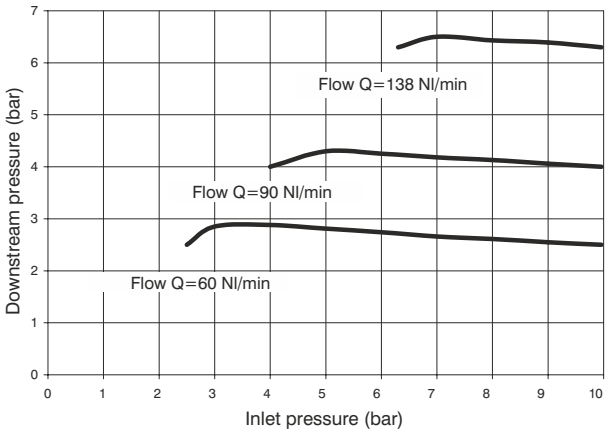

Operational characteristics

Combined group comprising Filter, Regulator with built in manometer and Lubricator assembled with two (Y) type coupling kits for panel mounting.
Integrated manometer 0-12 bar as standard (for 0-8 and 0-12 bar range) and 0-4 bar (for 0-2 and 0-4 range)

Note

The pressure must be always regulating while increasing. For a more precise regulation and higher sensibility, the use of a regulator with a pressure range as close as possible to the regulated pressure is recommended.

Technical characteristics

Connections	G 3/8" - G 1/2"
Max. inlet pressure	13 bar
Working temperature	-5°C +50°C
Weight with Technopolymer threads	gr. 1058
Weight with threaded inserts	gr. 1118
Pressure range	0-2 bar / 0-4 bar 0-8 bar / 0-12 bar
Filter pore size	5 μm - 20 μm - 50 μm
Bowl capacity	68 cm^3
Indicative oil drop rate	1 drop every 300/600 Nl
Oil type	FD22 - HG32
Bowl capacity	136 cm^3
Assembly positions	Vertical
Max. fitting torque (with Technopolymer threads)	G1/2" = 22 Nm
Max. fitting torque (with threaded inserts)	G3/8" = 25 Nm G1/2" = 30 Nm
Min. operational flow at 6,3 bar	100 Nl/min.

Ordering code

G V 173 C T S O D Z

V	VERSION
	N = Metal inserts
	T = Technopolymer thread
C	CONNECTIONS
	A = G3/8" (only for "N" version)
	B = G1/2"
	C = 1/2 NPT (only for "N" version)
T	TYPE
	K = Built in gauge
	T = G1/8" gauge connection
S	FILTER PORE SIZE ADJUSTING RANGE
	C = 5 μm / 0-8 bar
	D = 5 μm / 0-12 bar
	G = 20 μm / 0-8 bar
	H = 20 μm / 0-12 bar
	N = 50 μm / 0-8 bar
	P = 50 μm / 0-12 bar
O	OPTIONS
	= Standard *
	A = Min.oil level indicator NO
	C = Min.oil level indicator NC
	S = Automatic drain
	SA = Automatic drain + Min.oil level indicator NO
	SC = Automatic drain + Min.oil level indicator NC
D	FLOW DIRECTION
	= Standard (from left to right)
	W = from right to left
Z	BOWL OPTIONS
	= Standard *
	N = Nylon bowl

* no additional letter required

Service unit assembled (EM+PA+L) (E+PA+L) (EW+PA+L)

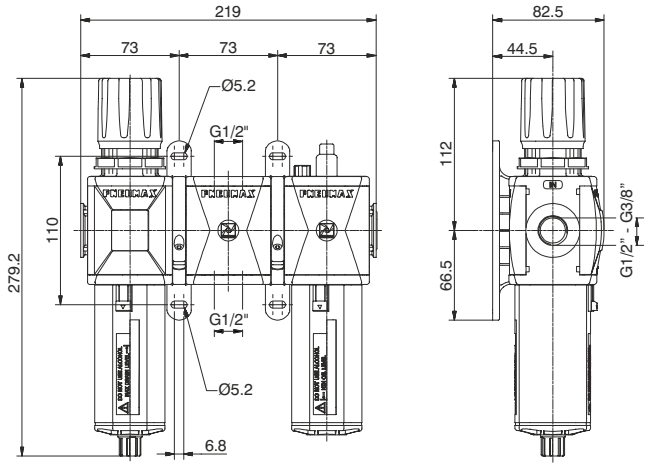

Example : GT173BNG : size 3 combined group comprising Filter-regulator, Air intake and Lubricator Technopolymer threads, G1/2" connections, 0 to 8 bar adjusting range and 20 μm filter pore size

Flow rate curves

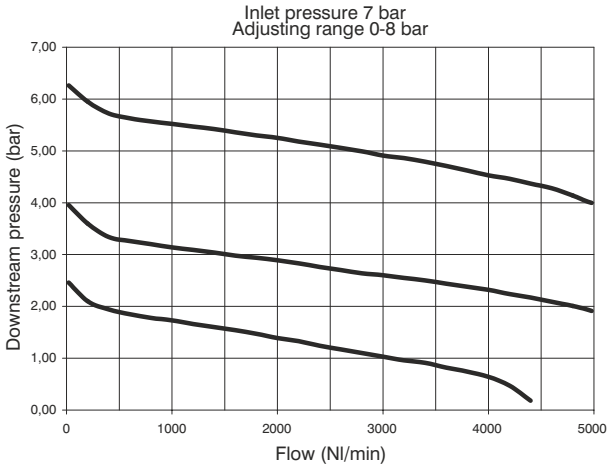

Adjustment characteristics

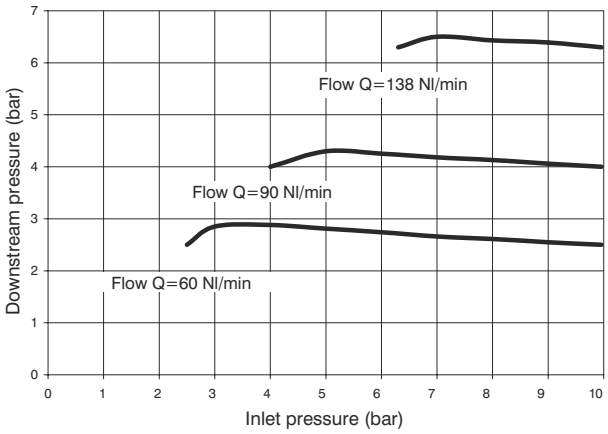

Operational characteristics

Combined group comprising Filter-regulator with built in manometer, Air intake and Lubricator assembled with two (Y) type coupling kits for panel mounting. Integrated manometer 0-12 bar as standard (for 0-8 and 0-12 bar range) and 0-4 bar (for 0-2 and 0-4 range)

Note

The pressure must be always regulating while increasing. For a more precise regulation and higher sensibility, the use of a regulator with a pressure range as close as possible to the regulated pressure is recommended.

Technical characteristics

Connections	G 3/8" - G 1/2"
Max. inlet pressure	13 bar
Working temperature	-5°C +50°C
Weight with Technopolymer threads	gr. 999
Weight with threaded inserts	gr. 1039
Pressure range	0-2 bar / 0-4 bar 0-8 bar / 0-12 bar
Filter pore size	5 μm - 20 μm - 50 μm
Bowl capacity	68 cm^3
Indicative oil drop rate	1 drop every 300/600 Nl
Oil type	FD22 - HG32
Bowl capacity	136 cm^3
Assembly positions	Vertical
Max. fitting torque (with Technopolymer threads)	G1/2" = 22 Nm
Max. fitting torque (with threaded inserts)	G3/8" = 25 Nm G1/2" = 30 Nm
Min. operational flow at 6,3 bar	100 Nl/min.

Ordering code

G Ⓥ 173 Ⓒ Ⓣ Ⓢ Ⓞ Ⓓ Ⓩ

Ⓥ	VERSION
	N = Metal inserts
	T = Technopolymer thread
Ⓒ	CONNECTIONS
	A = G3/8" (only for "N" version)
	B = G1/2"
	C = 1/2 NPT (only for "N" version)
Ⓣ	TYPE
	N = Built in gauge
	P = G1/8" gauge connection
Ⓢ	FILTER PORE SIZE ADJUSTING RANGE
	C = 5 μm / 0-8 bar
	D = 5 μm / 0-12 bar
	G = 20 μm / 0-8 bar
	H = 20 μm / 0-12 bar
	N = 50 μm / 0-8 bar
	P = 50 μm / 0-12 bar
Ⓞ	OPTIONS
	= Standard *
	A = Min.oil level indicator NO
	C = Min.oil level indicator NC
	S = Automatic drain
	SA = Automatic drain + Min.oil level indicator NO
	SC = Automatic drain + Min.oil level indicator NC
Ⓓ	FLOW DIRECTION
	= Standard (from left to right)
	W = from right to left
Ⓩ	BOWL OPTIONS
	= Standard *
	N = Nylon bowl

* no additional letter required

3

Service unit assembled (EM+PP+L) (E+PP+L) (EW+PP+L)

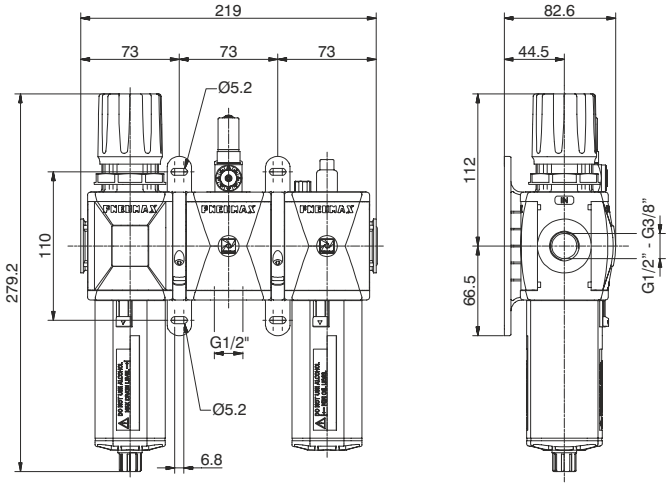

Example : GT173BRG : size 3 combined group comprising Filter-Regulator, Pressure switch and Lubricator Technopolymer threads, G1/2" connections 0 to 8 bar adjusting range and 20 μm filter pore size

Flow rate curves

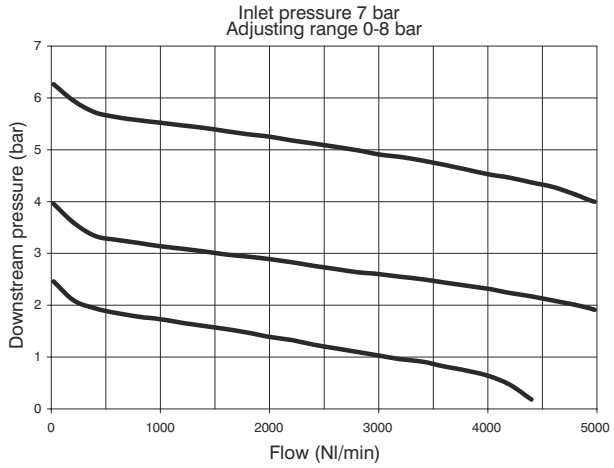

Adjustment characteristics

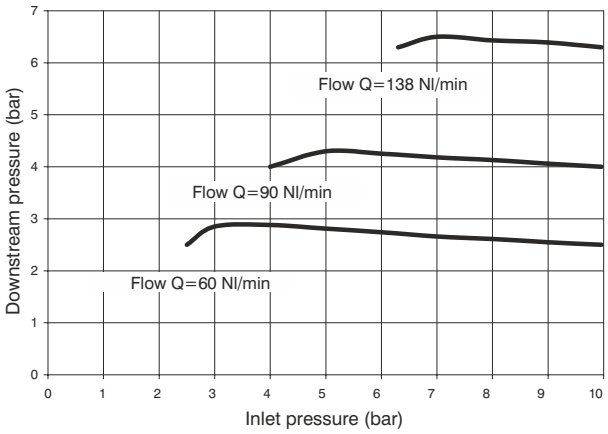

Operational characteristics

Combined group comprising Filter-regulator with built in manometer, Pressure switch and Lubricator assembled with two (Y) type coupling kits for panel mountings. Integrated manometer 0-12 bar as standard (for 0-8 and 0-12 bar range) and 0-4 bar (for 0-2 and 0-4 range)

Note

The pressure must be always regulating while increasing. For a more precise regulation and higher sensibility, the use of a regulator with a pressure range as close as possible to the regulated pressure is recommended.

Technical characteristics

Connections	G 3/8" - G 1/2"
Max. inlet pressure	13 bar
Working temperature	-5°C +50°C
Weight with Technopolymer threads	gr. 1083
Weight with threaded inserts	gr. 1123
Pressure range	0-2 bar / 0-4 bar 0-8 bar / 0-12 bar
Filter pore size	5 μm - 20 μm - 50 μm
Bowl capacity	68 cm^3
Indicative oil drop rate	1 drop every 300/600 Nl
Oil type	FD22 - HG32
Bowl capacity	136 cm^3
Assembly positions	Vertical
Max. fitting torque (with Technopolymer threads)	G1/2" = 22 Nm
Max. fitting torque (with threaded inserts)	G3/8" = 25 Nm G1/2" = 30 Nm
Min. operational flow at 6,3 bar	100 Nl/min.

Ordering code

G(V)173(C)(T)(S)(O)(D)(Z)

(V)	VERSION
	N = Metal inserts
	T = Technopolymer thread
(C)	CONNECTIONS
	A = G3/8" (only for "N" version)
	B = G1/2"
	C = 1/2 NPT (only for "N" version)
(T)	TYPE
	R = Built in gauge
	C = G1/8" gauge connection
(S)	FILTER PORE SIZE ADJUSTING RANGE
	C = 5 μm / 0-8 bar
	D = 5 μm / 0-12 bar
	G = 20 μm / 0-8 bar
	H = 20 μm / 0-12 bar
	N = 50 μm / 0-8 bar
	P = 50 μm / 0-12 bar
(O)	OPTIONS
	= Standard *
	A = Min.oil level indicator NO
	C = Min.oil level indicator NC
	S = Automatic drain
	SA = Automatic drain + Min.oil level indicator NO
	SC = Automatic drain + Min.oil level indicator NC
(D)	FLOW DIRECTION
	= Standard (from left to right)
	W = from right to left
(Z)	BOWL OPTIONS
	= Standard *
	N = Nylon bowl

* no additional letter required

Service unit assembled (VL+EM) (VL+E) (VL+EW)

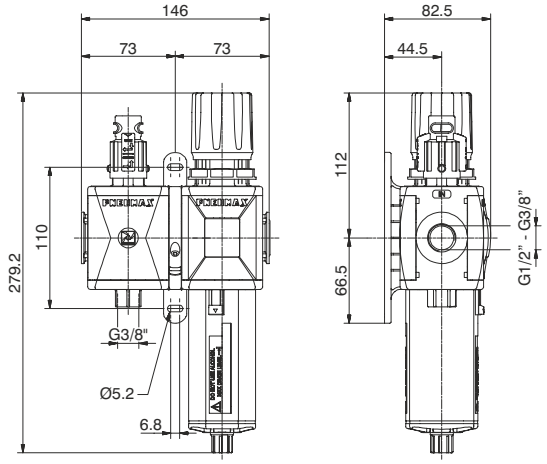

Example : GT173BVGG : size 3 combined group comprising Shut-off valve, Filter-regulator Technopolymer threads, G1/2" connections 0 to 8 bar adjusting range and 20 μm filter pore size

Flow rate curves

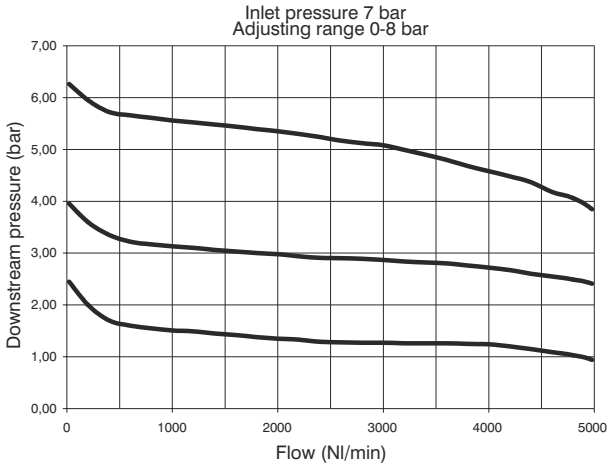

Adjustment characteristics

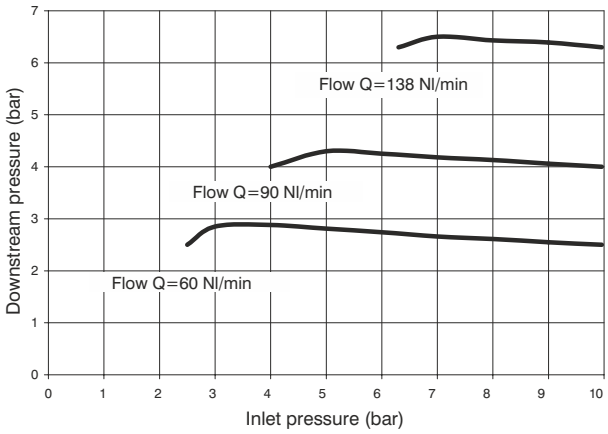

Operational characteristics

Combined group comprising manual shut-off valve, Filter - regulator with built in manometer, assembled with one (Y) type coupling kit for panel mountings.
Integrated manometer 0-12 bar as standard (for 0-8 and 0-12 bar range) and 0-4 bar (for 0-2 and 0-4 range)

Note

The pressure must be always regulating while increasing. For a more precise regulation and higher sensibility, the use of a regulator with a pressure range as close as possible to the regulated pressure is recommended.

Technical characteristics

Connections	G 3/8" - G 1/2"
Max. inlet pressure	13 bar
Working temperature	-5°C +50°C
Weight with Technopolymer threads	gr. 749
Weight with threaded inserts	gr. 789
Pressure range	0-2 bar / 0-4 bar 0-8 bar / 0-12 bar
Filter pore size	5 μm - 20 μm - 50 μm
Bowl capacity	68 cm^3
Indicative oil drop rate	1 drop every 300/600 Nl
Oil type	FD22 - HG32
Bowl capacity	136 cm^3
Assembly positions	Vertical
Max. fitting torque (with Technopolymer threads)	G1/2" = 22 Nm
Max. fitting torque (with threaded inserts)	G3/8" = 25 Nm G1/2" = 30 Nm
Min. operational flow at 6,3 bar	100 Nl/min.

Ordering code

G Ⓥ 173 Ⓒ Ⓣ Ⓢ Ⓞ Ⓓ Ⓩ

Ⓥ	VERSION N = Metal inserts T = Technopolymer thread
Ⓒ	CONNECTIONS A = G3/8" (only for "N" version) B = G1/2" C = 1/2 NPT (only for "N" version)
Ⓣ	TYPE VG = Built in gauge VU = G1/8" gauge connection
Ⓢ	FILTER PORE SIZE ADJUSTING RANGE C = 5 μm / 0-8 bar D = 5 μm / 0-12 bar G = 20 μm / 0-8 bar H = 20 μm / 0-12 bar N = 50 μm / 0-8 bar P = 50 μm / 0-12 bar
Ⓞ	OPTIONS = Standard * S = Automatic drain
Ⓓ	FLOW DIRECTION = Standard (from left to right) W = from right to left
Ⓩ	BOWL OPTIONS = Standard * N = Nylon bowl

* no additional letter required

3

Service unit assembled (VL+EM+L) (VL+E+L) (VL+EW+L)

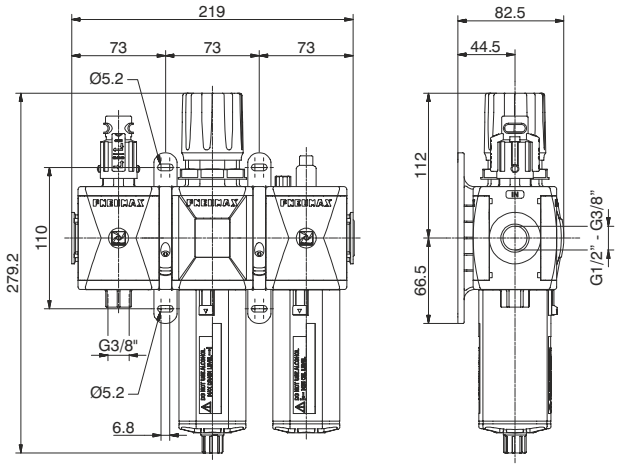

Example : GT173BVHG : Size 3 Combined group comprising Shut-off valve, Filter-regulator and Lubricator Technopolymer threads, G1/2" connections 0 to 8 bar adjusting range and 20 μm filter pore size

Flow rate curves

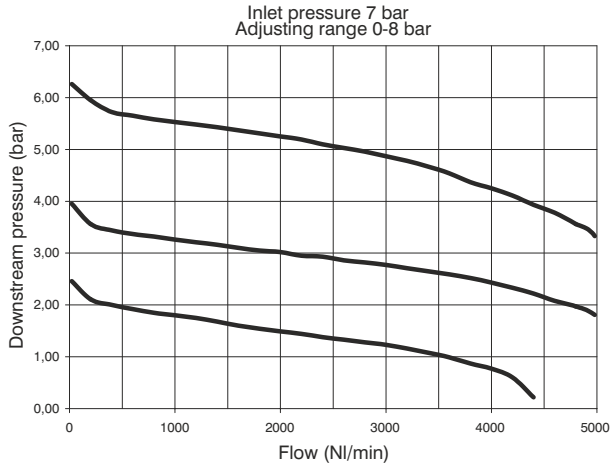

Adjustment characteristics

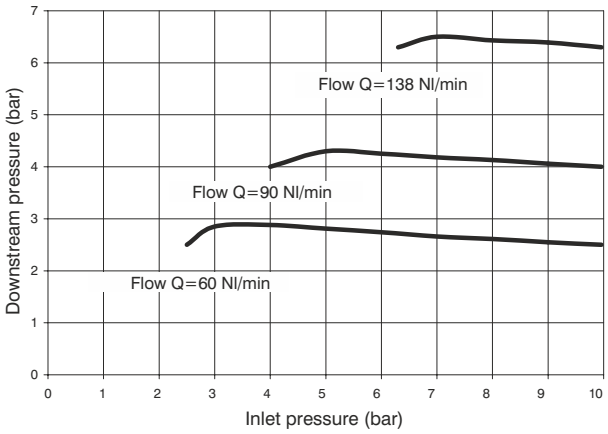

Operational characteristics

Combined group comprising manual shut-off valve, Filter - regulator with built in manometer and Lubricator assembled with two(Y) type coupling kits for panel mountings.
Integrated manometer 0-12 bar as standard (for 0-8 and 0-12 bar range) and 0-4 bar (for 0-2 and 0-4 range)

Note

The pressure must be always regulating while increasing. For a more precise regulation and higher sensibility, the use of a regulator with a pressure range as close as possible to the regulated pressure is recommended.

Technical characteristics

Connections	G 3/8" - G 1/2"
Max. inlet pressure	13 bar
Working temperature	-5°C +50°C
Weight with Technopolymer threads	gr. 1078
Weight with threaded inserts	gr. 1138
Pressure range	0-2 bar / 0-4 bar 0-8 bar / 0-12 bar
Filter pore size	5 μm - 20 μm - 50 μm
Bowl capacity	68 cm^3
Indicative oil drop rate	1 drop every 300/600 Nl
Oil type	FD22 - HG32
Bowl capacity	136 cm^3
Assembly positions	Vertical
Max. fitting torque (with Technopolymer threads)	G1/2" = 22 Nm
Max. fitting torque (with threaded inserts)	G3/8" = 25 Nm G1/2" = 30 Nm
Min. operational flow at 6,3 bar	100 Nl/min.

Ordering code

G V 173 C T S O D Z

V	VERSION
	N = Metal inserts
	T = Technopolymer thread
C	CONNECTIONS
	A = G3/8" (only for "N" version)
	B = G1/2"
	C = 1/2 NPT (only for "N" version)
T	TYPE
	VH = Built in gauge
	VJ = G1/8" gauge connection
S	FILTER PORE SIZE ADJUSTING RANGE
	C = 5 μm / 0-8 bar
	D = 5 μm / 0-12 bar
	G = 20 μm / 0-8 bar
	H = 20 μm / 0-12 bar
	N = 50 μm / 0-8 bar
	P = 50 μm / 0-12 bar
O	OPTIONS
	= Standard *
	A = Min.oil level indicator NO
	C = Min.oil level indicator NC
	S = Automatic drain
	SA = Automatic drain + Min.oil level indicator NO
	SC = Automatic drain + Min.oil level indicator NC
D	FLOW DIRECTION
	= Standard (from left to right)
	W = from right to left
Z	BOWL OPTIONS
	= Standard *
	N = Nylon bowl

* no additional letter required

Service unit assembled (VL+F+RM+L) (VL+F+R+L) (VL+F+RW+L)

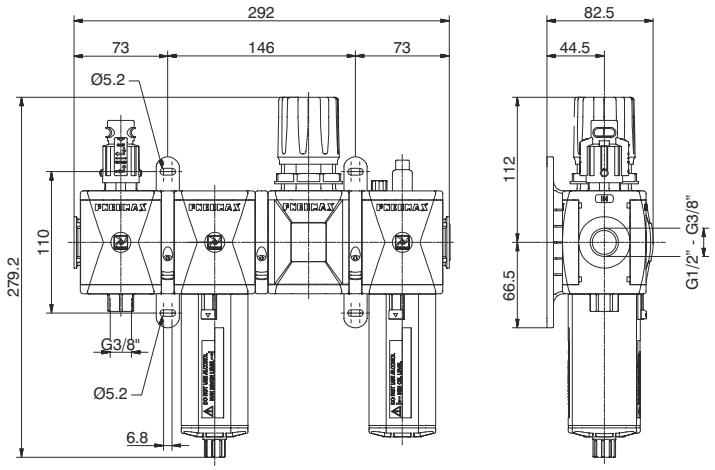

Example : GT173BVKG : size 3 combined group comprising Shut-off valve, Filter, Regulator and Lubricator Technopolymer threads, G1/2" connections 0 to 8 bar adjusting range and 20 μm filter pore size

Flow rate curves

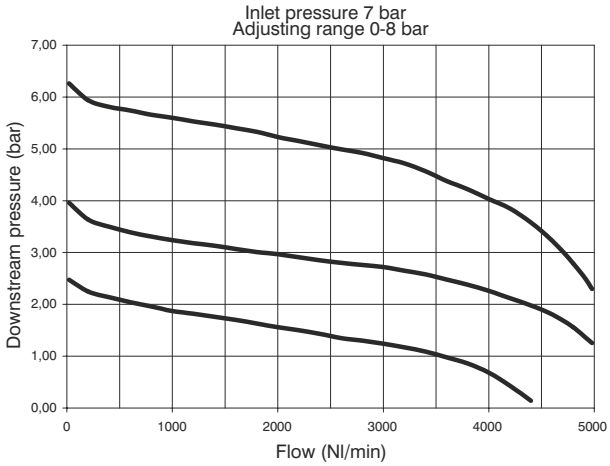

Adjustment characteristics

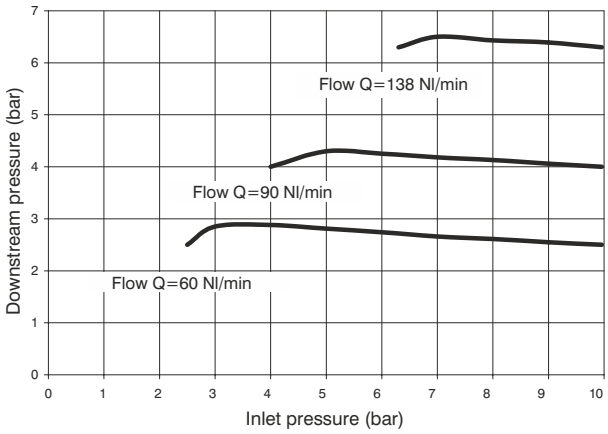

Operational characteristics

Combined group comprising Manual shut-off valve, Filter, Regulator with built in manometer and Lubricator , assembled with two (Y) type coupling kits for panel mounting and one (X) type coupling kit.
Integrated manometer 0-12 bar as standard (for 0-8 and 0-12 bar range) and 0-4 bar (for 0-2 and 0-4 range)

Note

The pressure must be always regulating while increasing. For a more precise regulation and higher sensibility, the use of a regulator with a pressure range as close as possible to the regulated pressure is recommended.

Technical characteristics

Connections	G 3/8" - G 1/2"
Max. inlet pressure	13 bar
Working temperature	-5°C +50°C
Weight with Technopolymer threads	gr. 1308
Weight with threaded inserts	gr. 1388
Pressure range	0-2 bar / 0-4 bar 0-8 bar / 0-12 bar
Filter pore size	5 μm - 20 μm - 50 μm
Bowl capacity	68 cm^3
Indicative oil drop rate	1 drop every 300/600 Nl
Oil type	FD22 - HG32
Bowl capacity	136 cm^3
Assembly positions	Vertical
Max. fitting torque (with Technopolymer threads)	G1/2" = 22 Nm
Max. fitting torque (with threaded inserts)	G3/8" = 25 Nm G1/2" = 30 Nm
Min. operational flow at 6,3 bar	100 Nl/min.

Ordering code

G Ⓥ 173 Ⓒ Ⓣ Ⓢ Ⓞ Ⓓ Ⓩ

Ⓥ	VERSION
	N = Metal inserts
	T = Technopolymer thread
Ⓒ	CONNECTIONS
	A = G3/8" (only for "N" version)
	B = G1/2"
	C = 1/2 NPT (only for "N" version)
Ⓣ	TYPE
	VK = Built in gauge
	VT = G1/8" gauge connection
Ⓢ	FILTER PORE SIZE ADJUSTING RANGE
	C = 5 μm / 0-8 bar
	D = 5 μm / 0-12 bar
	G = 20 μm / 0-8 bar
	H = 20 μm / 0-12 bar
	N = 50 μm / 0-8 bar
	P = 50 μm / 0-12 bar
Ⓞ	OPTIONS
	= Standard *
	A = Min.oil level indicator NO
	C = Min.oil level indicator NC
	S = Automatic drain
	SA = Automatic drain + Min.oil level indicator NO
	SC = Automatic drain + Min.oil level indicator NC
Ⓓ	FLOW DIRECTION
	= Standard (from left to right)
	W = from right to left
Ⓩ	BOWL OPTIONS
	= Standard *
	N = Nylon bowl

* no additional letter required

Service unit assembled (VL+EM+PA+L) (VL+E+PA+L) (VL+EW+PA+L)

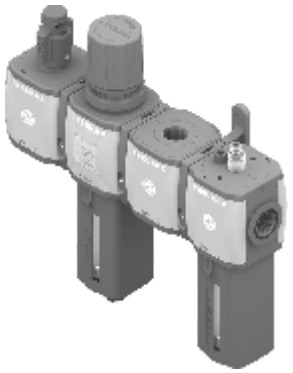

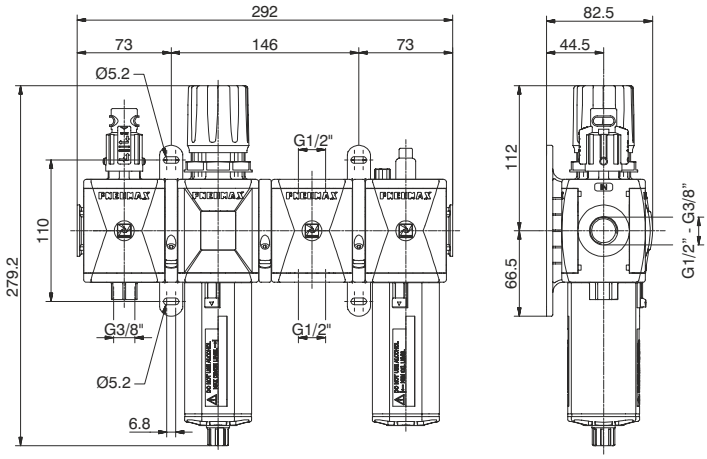

Example : GT173BVNG : size 3 combined group comprising Shut-off valve, Filter-regulator, Air intake and Lubricator Technopolymer threads, G1/2" connections 0 to 8 baradjusting range and 20 μm filter pore size

Flow rate curves

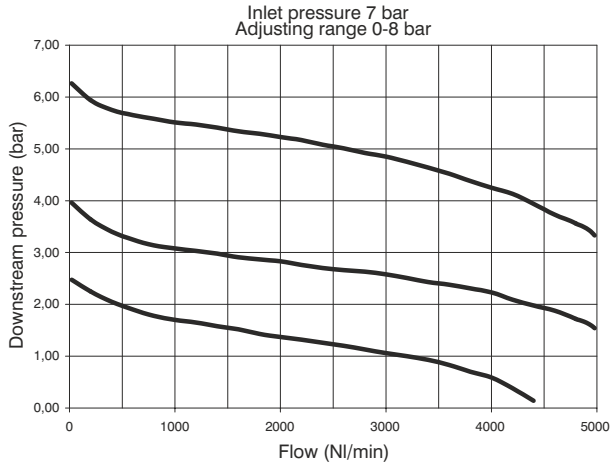

Adjustment characteristics

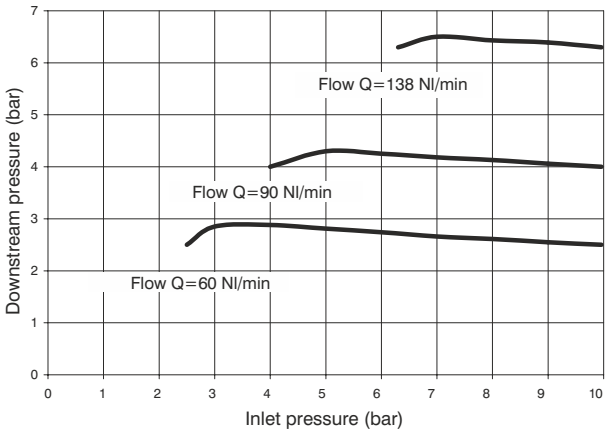

Operational characteristics

Combined group comprising manual shut-off valve, Filter - regulator with built in manometer, Air intake and Lubricator, assembled with two (Y) type coupling kits for panel mounting and one (X) type coupling kit.
Integrated manometer 0-12 bar as standard
(for 0-8 and 0-12 bar range) and 0-4 bar (for 0-2 and 0-4 range)

Note

The pressure must be always regulating while increasing. For a more precise regulation and higher sensibility, the use of a regulator with a pressure range as close as possible to the regulated pressure is recommended.

Technical characteristics

Connections	G 3/8" - G 1/2"
Max. inlet pressure	13 bar
Working temperature	-5°C +50°C
Weight with Technopolymer threads	gr. 1249
Weight with threaded inserts	gr. 1309
Pressure range	0-2 bar / 0-4 bar 0-8 bar / 0-12 bar
Filter pore size	5 μm - 20 μm - 50 μm
Bowl capacity	68 cm^3
Indicative oil drop rate	1 drop every 300/600 Nl
Oil type	FD22 - HG32
Bowl capacity	136 cm^3
Assembly positions	Vertical
Max. fitting torque (with Technopolymer threads)	G1/2" = 22 Nm
Max. fitting torque (with threaded inserts)	G3/8" = 25 Nm G1/2" = 30 Nm
Min. operational flow at 6,3 bar	100 Nl/min.

Ordering code

G V 173 C T S O D Z

V	VERSION
	N = Metal inserts
	T = Technopolymer thread
C	CONNECTIONS
	A = G3/8" (only for "N" version)
	B = G1/2"
	C = 1/2 NPT (only for "N" version)
T	TYPE
	VN = Built in gauge
	VP = G1/8" gauge connection
S	FILTER PORE SIZE ADJUSTING RANGE
	C = 5 μm / 0-8 bar
	D = 5 μm / 0-12 bar
	G = 20 μm / 0-8 bar
	H = 20 μm / 0-12 bar
	N = 50 μm / 0-8 bar
	P = 50 μm / 0-12 bar
O	OPTIONS
	= Standard *
	A = Min.oil level indicator NO
	C = Min.oil level indicator NC
	S = Automatic drain
	SA = Automatic drain + Min.oil level indicator NO
	SC = Automatic drain + Min.oil level indicator NC
D	FLOW DIRECTION
	= Standard (from left to right)
	W = from right to left
Z	BOWL OPTIONS
	= Standard *
	N = Nylon bowl

* no additional letter required

Service unit assembled (VL+EM+PP+L) (VL+E+PP+L) (VL+EW+PP+L)

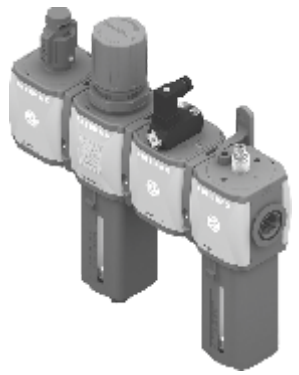

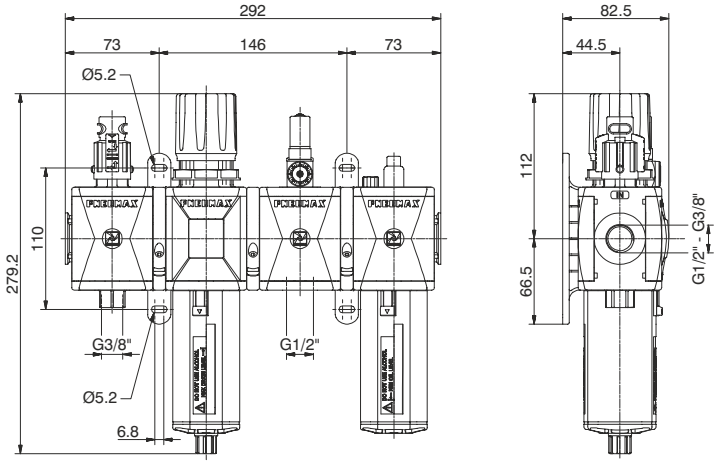

Example : GT173BVRG : size 3 combined group comprising Shut-off valve, Filter-regulator, Pressure switch and Lubricator Technopolymer threads, G1/2" connections adjusting range 0 to 8 bar and 20 μm filter pore size

Flow rate curves

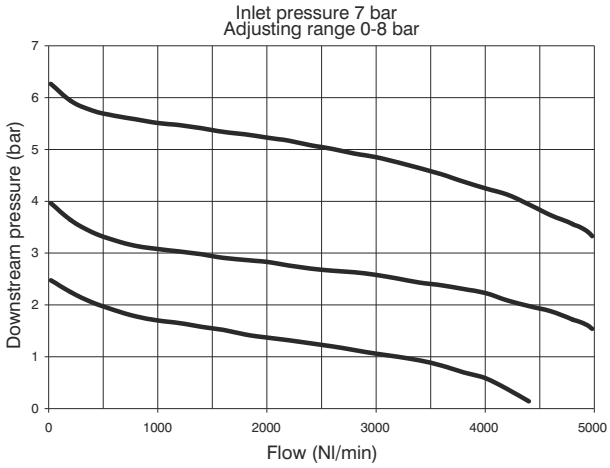

Adjustment characteristics

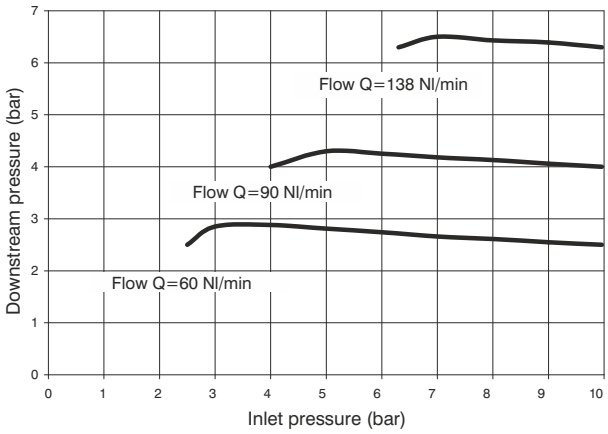

Operational characteristics

Combined group comprising manual shut-off valve, Filter - regulator with built in manometer, Pressure switch and Lubricator, assembled with two (Y) type coupling kits for panel mounting and one (X) type coupling kit.
Integrated manometer 0-12 bar as standard (for 0-8 and 0-12 bar range) and 0-4 bar (for 0-2 and 0-4 range)

Note

The pressure must be always regulating while increasing. For a more precise regulation and higher sensibility, the use of a regulator with a pressure range as close as possible to the regulated pressure is recommended.

Technical characteristics

Connections	G 3/8" - G 1/2"
Max. inlet pressure	13 bar
Working temperature	-5°C +50°C
Weight with Technopolymer threads	gr. 1333
Weight with threaded inserts	gr. 1393
Pressure range	0-2 bar / 0-4 bar 0-8 bar / 0-12 bar
Filter pore size	5 μm - 20 μm - 50 μm
Bowl capacity	68 cm^3
Indicative oil drop rate	1 drop every 300/600 Nl
Oil type	FD22 - HG32
Bowl capacity	136 cm^3
Assembly positions	Vertical
Max. fitting torque (with Technopolymer threads)	G1/2" = 22 Nm
Max. fitting torque (with threaded inserts)	G3/8" = 25 Nm G1/2" = 30 Nm
Min. operational flow at 6,3 bar	100 Nl/min.

Ordering code

G(V)173(C)(T)(S)(O)(D)(Z)

(V)	VERSION
	N = Metal inserts
	T = Technopolymer thread
(C)	CONNECTIONS
	A = G3/8" (only for "N" version)
	B = G1/2"
	C = 1/2 NPT (only for "N" version)
(T)	TYPE
	VR = Built in gauge
	VC = G1/8" gauge connection
(S)	FILTER PORE SIZE ADJUSTING RANGE
	C = 5 μm / 0-8 bar
	D = 5 μm / 0-12 bar
	G = 20 μm / 0-8 bar
	H = 20 μm / 0-12 bar
	N = 50 μm / 0-8 bar
	P = 50 μm / 0-12 bar
(O)	OPTIONS
	= Standard *
	A = Min.oil level indicator NO
	C = Min.oil level indicator NC
	S = Automatic drain
	SA = Automatic drain + Min.oil level indicator NO
	SC = Automatic drain + Min.oil level indicator NC
(D)	FLOW DIRECTION
	= Standard (from left to right)
	W = from right to left
(Z)	BOWL OPTIONS
	= Standard *
	N = Nylon bowl

* no additional letter required

3

Service unit assembled (VE+AP)

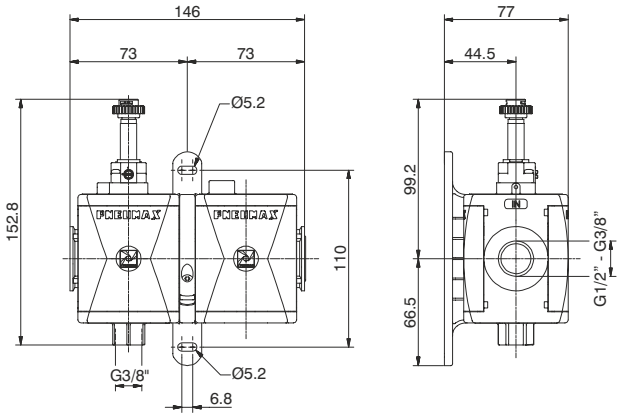

Example : GT173BSB2 : size 3 combined group comprising Electric shut-off valve, Progressive start-up valve without coil with M2 pilot Technopolymer threads, G1/2" connections

Operational characteristics	Technical characteristics	
Combined group comprising Electric shut - off valve and Progressive start-up valve assembled with a (Y) type coupling kit for panel mounting.	Connections	G 3/8" - G 1/2"
	Max. inlet pressure	10 bar
	Min. inlet pressure	2.5 bar
	Working temperature	-5°C +50°C
	Weight with Technopolymer threads	gr. 549
	Weight with threaded inserts	gr. 589
	Assembly positions	Indifferent
	Max. fitting torque (with Technopolymer threads)	G1/2" = 22 Nm
	Max. fitting torque (with threaded inserts)	G3/8" = 25 Nm G1/2" = 30 Nm
	Flow at 6 bar with Δp=1	2800 Nl/min.

Ordering code

G Ⓥ 173 Ⓒ S Ⓐ

Ⓥ	VERSION
	N = Metal inserts
	T = Technopolymer thread
Ⓒ	CONNECTIONS
	A = G3/8" (only for "N" version)
	B = G1/2"
	C = 1/2 NPT (only for "N" version)
Ⓐ	15 mm COIL VOLTAGE
	A4 = 12 V DC
	A5 = 24 V DC
	A6 = 24 V AC (50-60 Hz)
	A7 = 110 V AC (50-60 Hz)
	A8 = 230 V AC (50-60 Hz)
	A9 = 24 V DC (1 Watt)
	22 mm COIL VOLTAGE
	B2 = Without coil M2 mechanic
	B4 = 12 V DC
	B5 = 24 V DC
	B6 = 24 V AC (50-60 Hz)
	B7 = 110 V AC (50-60 Hz)
	B8 = 230 V AC (50-60 Hz)
	B9 = 24 V DC (2 Watt)
	30 mm COIL VOLTAGE
	C5 = 24 V DC
	C6 = 24 V AC (50-60 Hz)
	C7 = 110 V AC (50-60 Hz)
	C8 = 230 V AC (50-60 Hz)
	C9 = 24 V DC (2 Watt)

Construction and working characteristics

The new "AIRPLUS" range of FRL units represents an evolution of the original 1700 series.
The latest technical features include; Improved performance and reliability as well as quick and easy assembly. The transparent polycarbonate (PC) bowls are fitted with a bowl protection guard which is assembled on the component body via a quick coupling mechanism which also includes a safety release button. The filters are available with 3 grades of filtration (5μm, 20μm and 50μm) as standard and also include a manual/semi-automatic drain. An automatic drain is also available.
The regulators are based on the rolling diaphragm technology with a low hysteresis and a balanced system. They can be supplied with an integral flush mounted pressure gauge and are available in 4 different pressure ranges from 0 - 12 bar, the adjusting knob can be locked by depressing it into the lock position.
The lubricator has been designed using the venture principle and the amount of oil is regulated via the adjusting screw which is positioned on top of the unit on the polycarbonate (PC) dome which also provides a visual indication of the amount of oil being regulated. The oil suction pipe is fitted with a sintered filter as standard which helps prevent contaminates reaching the downstream circuit.
Two versions of the shut-off valve are available, one manual and one being solenoid operated, in both cases the units are fitted with a threaded connection for exhausting the air from the downstream circuit. On the manual version it's also possible to fit 3 padlocks whilst in the lock position in order to prevent accidental pressurization of the pneumatic system and avoid accidents or damage. The solenoid operated version is available with a 15mm solenoid operator.
The soft start valve provides a controlled progressive build-up of pressure downstream avoiding sudden pressure surges which could be dangerous for components fitted to the downstream circuit, the filling time can be adjusted via the built in flow regulator. The valve opens fully once the downstream pressure reaches 50% of the inlet pressure. The pressure switch module can be set between 2 - 10 bars and the intake module completes the range. All of the components are connected together using the technopolymer flange system which also allows the units to be panel mounted as well as the ability to replace components without having to disassemble the FRL from its position.

Instructions for installation and operation

The FRL must be installed as close as possible to the application
The airflow must follow the direction as indicated on the FRL components or correspond with that indicated on the threaded connections (IN and OUT). All components fitted with a bowl must be mounted vertically with the bowl facing downwards. The FRL units can be wall mounted directly through the 8.5mm mounting holes or via the "Y" type quick coupling flange.
All units must be operated in according to the specified pressure and temperature ranges; fittings must be installed without exceeding the maximum torque allowed. The condensate level in both the filter and filter-regulator units must never exceed the maximum level indicated on the bowl. The condensate on the manual/semi-automatic drain unit can be discharged using 6/4mm tube fitted directly to the drain tap. The regulators pressure value must always be set whilst the pressure is rising ensuring the correct regulator and required pressure range have been selected. Lubricators must be filled with either FD22 or HG32 oils and the operator must ensure that the flow rate is above the minimum flow rate required to operate the unit. Below this value the unit does not operate correctly.
The oil quantity dispensed by the lubricator can be regulated by the adjusting the screw on the transparent polycarbonate dome through which the oil flow is visible. A drop of oil every 300 - 600 litres should be allowed and please note: The oil refill can take place only with the lubricator bowl NOT under pressure.
The lubricator can be refilled whilst the pneumatic circuit is pressurized thanks to the built in exhaust valve which allows the bowl to be depressurized and the oil refilled in the bowl.
The manual shut off valve is operated (On) with two actions, firstly push the knob down and secondly turn the knob clockwise. To discharge the downstream air, turn the knob anti-clockwise.
The soft start valve is used to slowly and progressively pressurize the downstream circuit; the time needed is adjustable via the built in flow regulator. Please note: The soft start valve on its own does not allow for the discharge of the downstream circuit, in order to do this it is necessary to combine this unit with a shut off valve (To be mounted upstream)

Maintenance

For any maintenance that requires the removal of the top or bottom plug/supports from the main component body it is necessary to remove the side cover plates and retaining screws. If the top or bottom plugs/supports are removed with the retaining screws still in place the unit could be permanently damaged

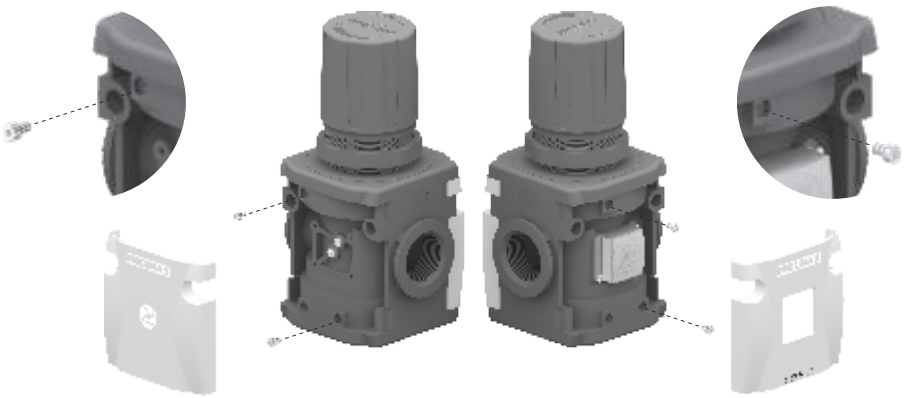

Bowls, plugs and supports are assembled with a bayonet type mechanism. In order to remove them rotate anti-clockwise until you reach a mechanical stop, then remove from the component body (For bowls, firstly press down the green safety button). Please note: Bowls and transparent parts can be cleaned with water and neutral soap. DO NOT USE SOLVENTS OR ALCOHOL
Filter elements (From filters and filter-regulators) made of HDPE can be regenerated by washing and blowing them. In order to remove the filter elements it is necessary to remove the bowl, unscrew the filter element, replace it with a new unit or clean the old one.
Lubricator oil can be refilled with the circuit pressurized thanks to the exhaust valve which is built and allows the bowl to be depressurized. Once this operation has been carried out it is possible to unscrew and remove the bowl to refill it or refill using the refill plug. Removing the bowl and refilling is preferred.
Should a pressure regulator not perform correctly or should a constant leak be detected form the relieving orifice beneath the adjusting knob it may be necessary to replace the diaphragm. Before attempting to replace the diaphragm unload the regulating spring before removing the regulator support. Due to the complexity of the regulator mechanism and the need to test the unit according to the Pneumax SpA specification any other repair should be carried out by the manufacturer.

Filter (F)

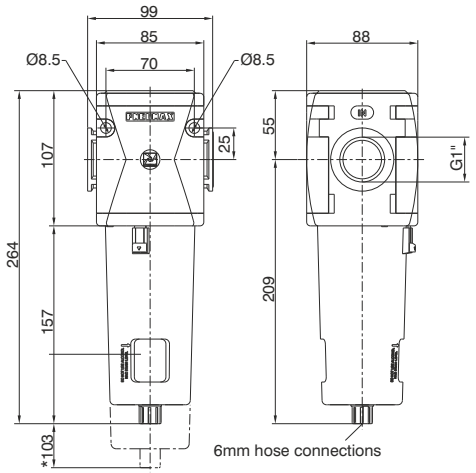

*Bowl removal maximum height

Example : N174BFB : size 4, Filter, G1" connections, 20 μm filter pore size

Flow rate curves

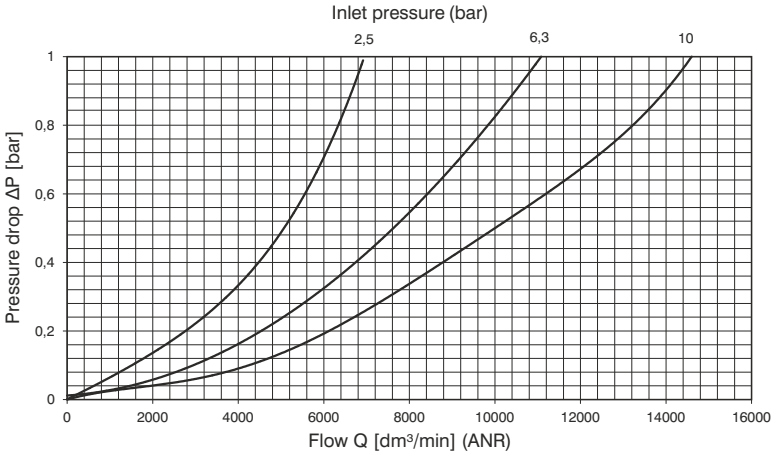

Operational characteristics	Technical characteristics		
- Double filtering action: air flow centrifugation and filter element	Connections	G1"	
- Filtering element made of HDPE (high density polyethylene) available in three different filtration grades (5μm, 20μm and 50μm) can be regenerated by washing it or replaced.	Max. inlet pressure	13 bar	
	Minimum working pressure with automatic drain	0,5 bar	
- Transparent bowl made off polycarbonate with bowl protection guard.	Maximum working pressure with automatic drain	10 bar	
- Bowl assembly via bayonet type quick coupling mechanism with safety button.	Working temperature	-5°C +50°C	
	Weight	1155 (gr)	
- Semi-automatic drain mounted as standard; automatic drain upon request.	Filter pore size	5μm - 20μm - 50μm	
	Bowl capacity	90 cm³	
Note	Assembly positions	Vertical	
In order to ensure adequate flow on the auto drain version it is recommended to use minimum a 6mm fitting.	Wall fixing screw	M8	

Ordering code

N174BFⓈⓄⓏ

Ⓢ	FILTER PORE SIZE
	A = 5 μm
	B = 20 μm
	C = 50 μm
Ⓞ	OPTIONS
	= Standard *
	S = Automatic drain
Ⓩ	BOWL OPTIONS
	= Standard *
	N = Nylon bowl

* no additional letter required

Coalescing filter (D)

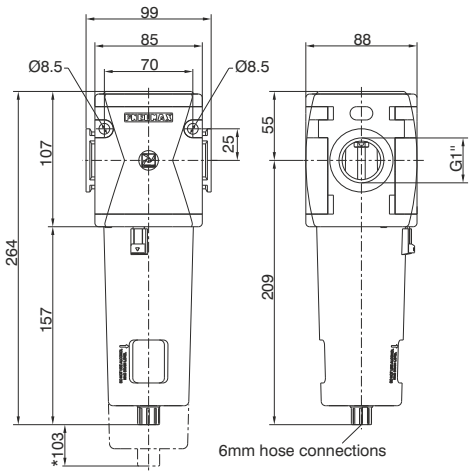

*Bowl removal maximum height

Example : N174BDA : size 4, Coalescing filter, G1" connections, filter efficency 99,97%

Flow rate curves

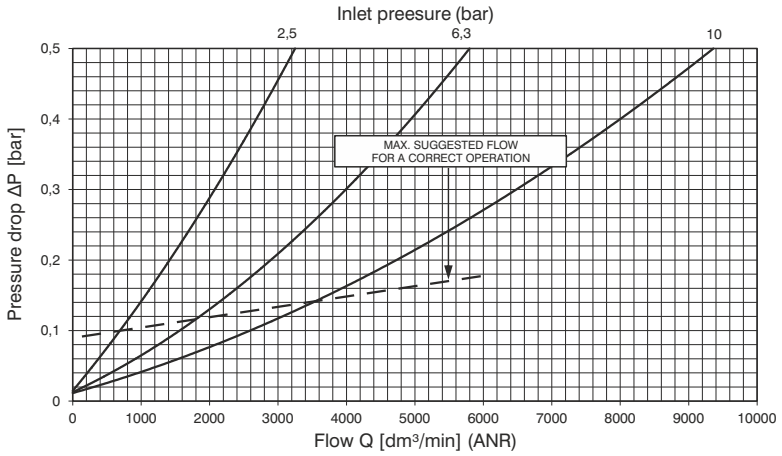

Operational characteristics

- Coalescing filter element with filtration grade of 0,01 μm
- Transparent bowl made off polycarbonate with bowl protection guard.
- Bowl assembly via bayonet type quick coupling mechanism with safety button.
- Semi-automatic drain mounted as standard; automatic drain upon request.

Note

In order to ensure a better grade of filtration it is recommended to use a 5 μm filter before the coalescing filter. In order to ensure adequate flow on the auto drain version it is recommended to use minimum a 6mm fitting.

Technical characteristics

Connections	G1”
Max. inlet pressure	13 bar
Minimum working pressure with automatic drain	0,5 bar
Maximum working pressure with automatic drain	10 bar
Working temperature	-5°C +50°C
Weight	1235 (gr)
Filter efficiency with 0,01 μm particle	99,97%
Bowl capacity	90 cm^3
Assembly positions	Vertical
Wall fixing screw	M8

Ordering code

N174BDⒺ⒪Ⓩ

Ⓔ	FILTER EFFICIENCY
	A = 99,97%
Ⓞ	OPTIONS
	= Standard *
	S = Automatic drain
Ⓩ	BOWL OPTIONS
	= Standard *
	N = Nylon bowl

* no additional letter required

Oil removal filter (DAV)

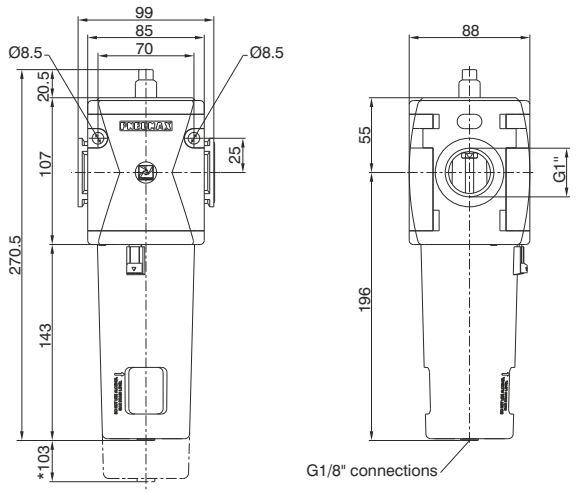

*Bowl removal maximum height

Example : N174BDAV : size 4, Oil removal filter, with clogging gauge, G1" connections.

Efficiency curve

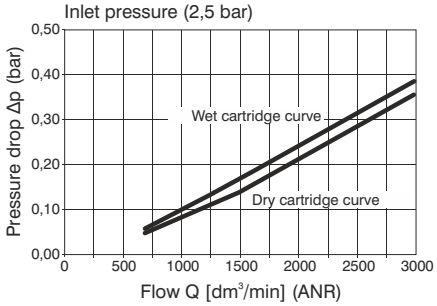

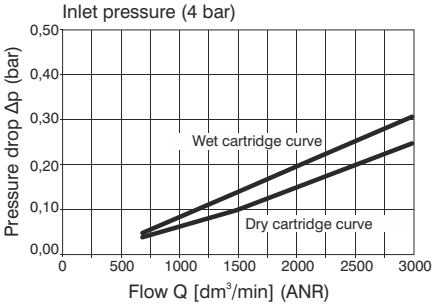

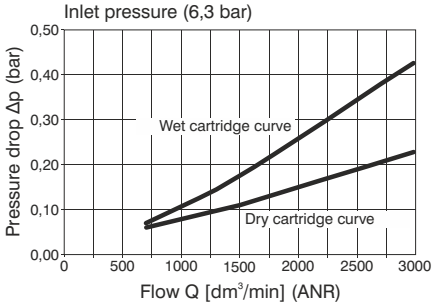

Operational characteristics

- Coalescing filtering cartridge particle removal 0,01 μm
  oil residual 0,01 ppm
- Clogging gauge
  green: proper working
  red: clogged cartridge (Δp 0,5 bar)
  we recommend to change the cartridge
- Transparent bowl made off polycarbonate with
  bowl protection guard.
- Bowl assembly via bayonet type quick coupling
  mechanism with safety button.
- Automatic drain mounted as standard.

Note

It is recommended to use a 5 μm filter before the oil removal filter. In order to ensure adequate flow on the auto drain version it is recommended to use minimum a 6mm fitting.

Technical characteristics

Connections	G1”
Nominal flow at 6,3 bar	13 bar
Filter efficiency	3000 Nl/min
Max. inlet pressure	99,99%
Minimum working pressure with automatic drain	0,5 bar
Maximum working pressure with automatic drain	10 bar
Working temperature	-5°C +50°C
Weight	1260 (gr)
Bowl capacity	90 cm³
Assembly positions	Vertical
Wall fixing screw	M8

Ordering code

N174BDAV❷

❷	BOWL OPTIONS = Standard * N = Nylon bowl

* no additional letter required

Carbon filter (DD)

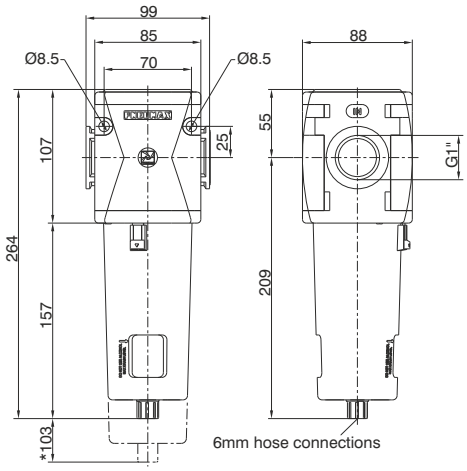

*Bowl removal maximum height

Example : N174BDD : size 4, Carbon filter with Technopolymer threads, G1" connections.

Efficiency curve

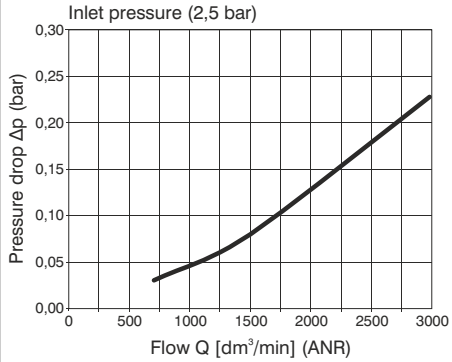

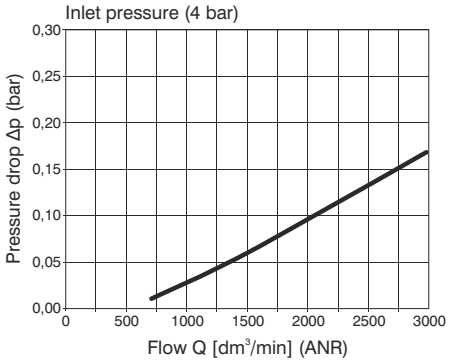

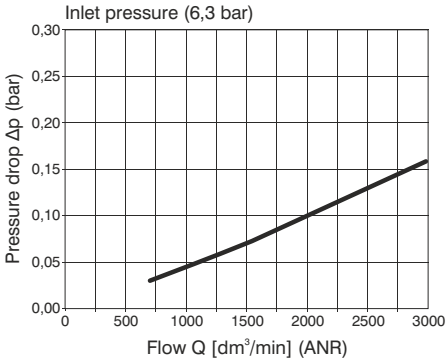

Operational characteristics

- Active carbon cartridge with built in particulate filter. Used to remove oil vapours, hydrocarbons, odours and particles coming from the compressed air lines or gasses in industrial applications. Oil residue up to <0,003 ppm (max imput aereosol 0.01ppm).
- Innovative filtering technology; high absorption capacity, with low differential pressure.
- Transparent bowl made off polycarbonate with bowl protection guard.
- Bowl assembly via bayonet type quick coupling mechanism with safety button.
- Semi-automatic drain mounted as standard.

Note

A 5 micron filter followed by a coalescing filter must be installed before the Oil removal filter in order to ensure the correct functionality of the unit and to safeguard the life of the active carbon cartridge. It is also necessary to preventively replace the cartridges at fixed intervals.

Technical characteristics

Connections	G 1"
Nominal flow at 6,3 bar	3000 Nl/min
Cartridge life	2000 hours
Max. inlet pressure	13 bar
Working temperature	-5°C ÷ +50°C
Weight	gr. 1260
Bowl capacity	90 cm³
Assembly positions	Vertical
Wall fixing screw	M8

Ordering code

N174BDD❷

❷	BOWL OPTIONS
	= Standard *
	N = Nylon bowl

* no additional letter required

Regulator (R)

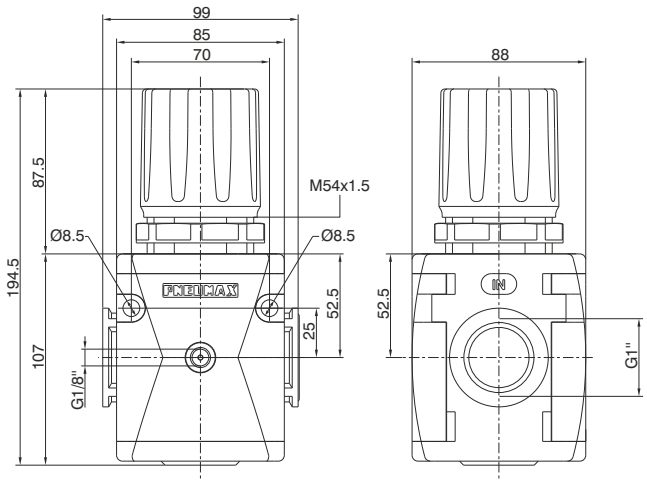

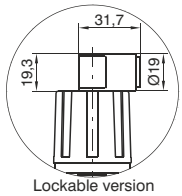

Lockable version
Detail

Example: N174BRC : size 4, Regulator, G1" connections, 0 to 8 bar adjusting range

Flow rate curves

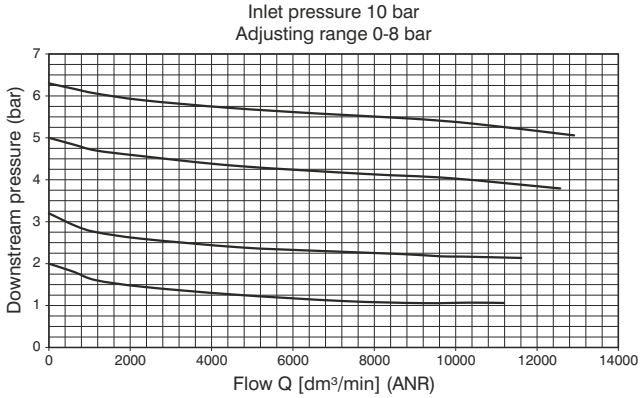

Adjustment characteristics

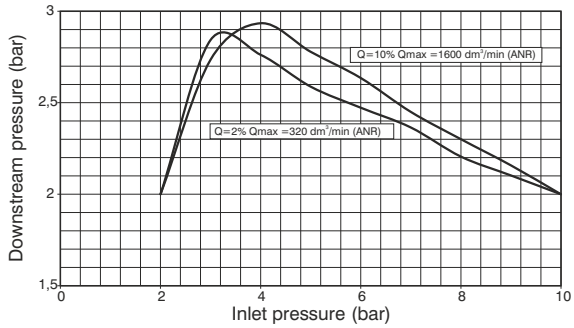

Operational characteristics

- Diaphragm pressure regulator with relieving.
- Low hysteresis rolling diaphragm.
- Balanced system.
- Available in four pressure ranges up to 12 bar.
- Operating knob can be locked in position by pressing it down once the desired P2 (regulated pressure) pressure value is achieved.
- Fitted with panel mounting locking ring.

Note

The pressure must be always regulating while increasing. For a more precise regulation and higher sensibility, the use of a regulator with a pressure range as close as possible to the regulated pressure is recommended.

Technical characteristics

Connections	G1”
Max. inlet pressure	13 bar
Working temperature	-5°C +50°C
Pressure gauge connections	G 1/8”
Weight	1225 (gr)
Pressure range	0-2 bar / 0-4 bar 0-8 bar / 0-12 bar
Assembly positions	Indifferent
Wall fixing screw	M8

Ordering code

N174BRⒼ⒯⓪

Ⓖ	ADJUSTING RANGE A = 0-2 bar B = 0-4 bar C = 0-8 bar D = 0-12 bar
Ⓣ	TYPE = Standard* L = no relieving R = Improved relieving
⓪	OPTIONS = Standard* K = Lockable version

* no additional letter required

Piloted pressure regulator (R)

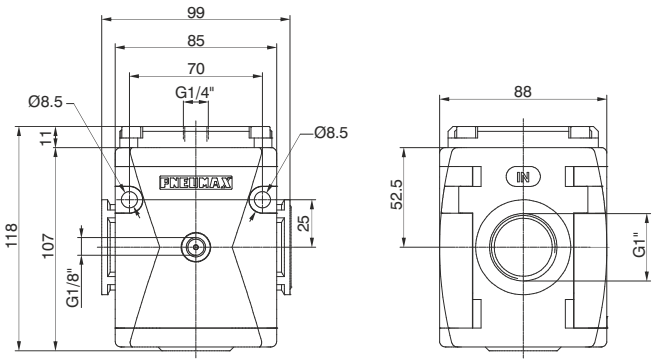

Example: N174BRP : size 4, Piloted pressure regulator with G1" connection

Flow rate curves

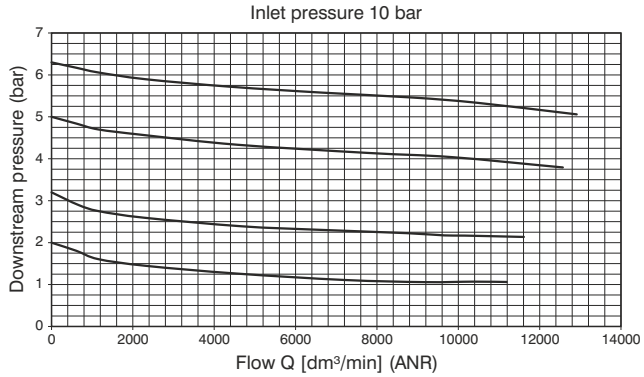

Adjustment characteristics

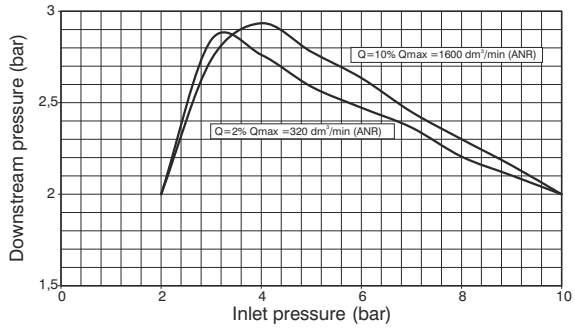

Piloting curves

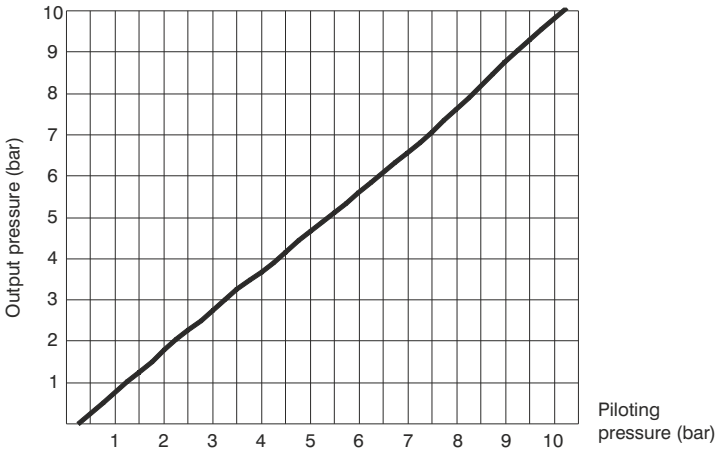

Operational characteristics	Technical characteristics		
- Piston pressure regulator with relieving	Connections	G1”	Ordering code
- Balanced system	Pilot port size	G1/4"	
Note	Max. inlet pressure	13 bar	**N174BRP**
Always regulate the rising pressure.	Working temperature	-5°C +50°C	
	Pressure gauge connections	G 1/8”	
	Weight	1155 (gr)	
	Assembly positions	Indifferent	
	Wall fixing screw	M8	

Regulator including gauge (RM)(RW)

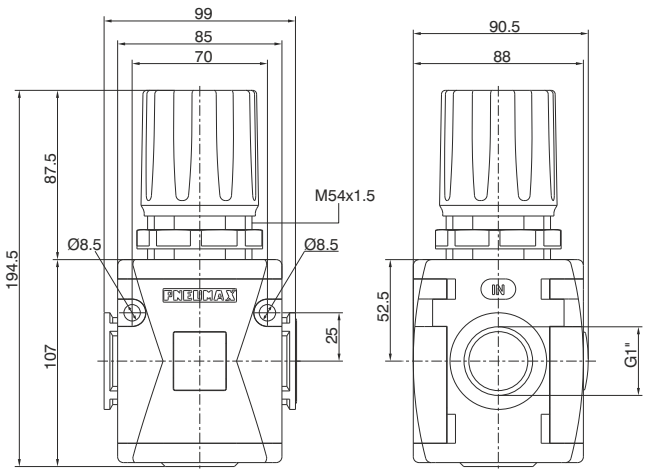

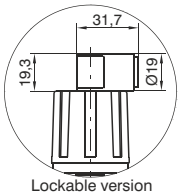

Lockable version
Detail

Example : N174BRMC : size 4, Regulator including gauge, G1" connections, 0 to 8 bar adjusting range

Flow rate curves

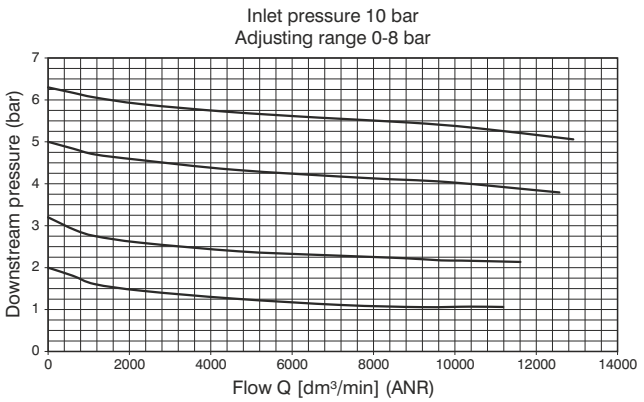

Adjustment characteristics

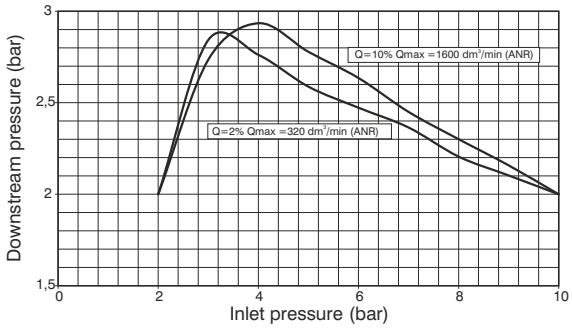

Operational characteristics

- Diaphragm pressure regulator with relieving.
- Low hysteresis rolling diaphragm.
- Balanced system.
- Available in four pressure ranges up to 12 bar.
- Operating knob can be locked in position by pressing it down once the desired P2 (regulated pressure) pressure value is achieved.
- Fitted with panel mounting locking ring.
- Integrated manometer 0-12 bar as standard (for 0-8 and 0-12 bar range) and 0-4 bar (for 0-2 and 0-4 range)

Note

The pressure must be always regulating while increasing. For a more precise regulation and higher sensibility, the use of a regulator with a pressure range as close as possible to the regulated pressure is recommended.

Technical characteristics

Connections	G1”
Max. inlet pressure	13 bar
Working temperature	-5°C +50°C
Weight	1220 (gr)
Pressure range	0-2 bar / 0-4 bar 0-8 bar / 0-12 bar
Assembly positions	Indifferent
Wall fixing screw	M8

Ordering code

N174BRⒹⒼ⒯⒪

Ⓓ	FLOW DIRECTION
	M = from left to right
	W = from right to left
Ⓖ	ADJUSTING RANGE
	A = 0-2 bar
	B = 0-4 bar
	C = 0-8 bar
	D = 0-12 bar
Ⓣ	TYPE
	= Standard *
	L = no relieving
	R = Improved relieving
Ⓞ	OPTIONS
	= Standard *
	K = Lockable version

* no additional letter required

Piloted pressure regulator with integrated manometer (RM)(RW)

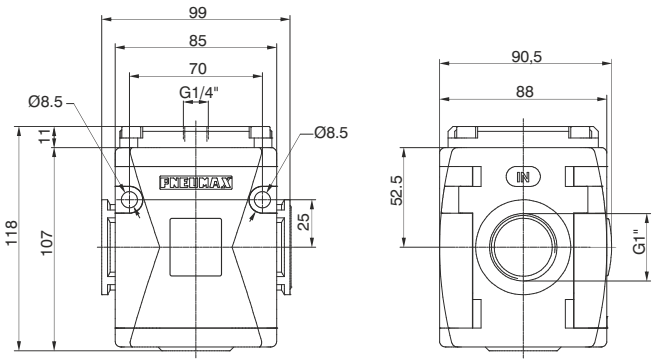

Example: N174BRMP : size 4, Piloted pressure regulator with integrated manometer with G1" connection

Flow rate curves

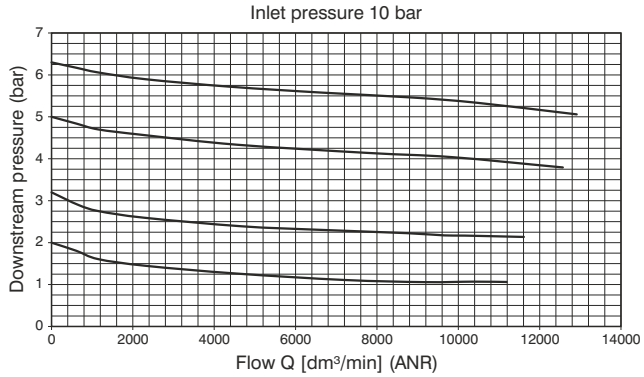

Adjustment characteristics

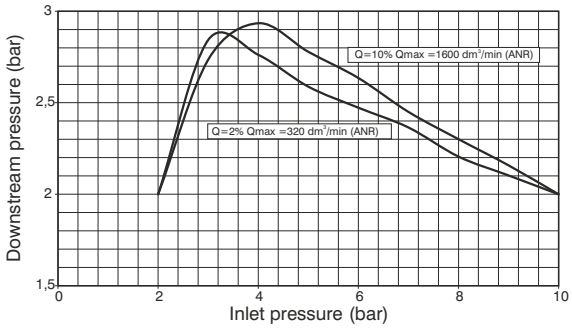

Piloting curves

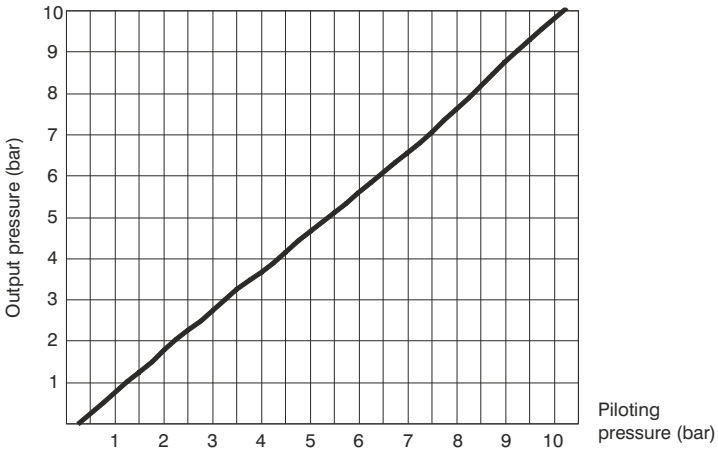

Operational characteristics	Technical characteristics		
- Piston pressure regulator with relieving	Connections	G1"	Ordering code
- Balanced system	Pilot port size	G1/4"	
- Built in gauge 0-12 bar range as standard.	Max. inlet pressure	13 bar	**N174BRⒹP**
Note	Working temperature	-5°C +50°C	Ⓓ FLOW DIRECTION
Always regulate the rising pressure.	Pressure gauge connections	G 1/8"	M = from left to right
	Weight	1150 (gr)	W = from right to left
	Assembly positions	Indifferent	
	Wall fixing screw	M8	

Filter-Regulator (E)

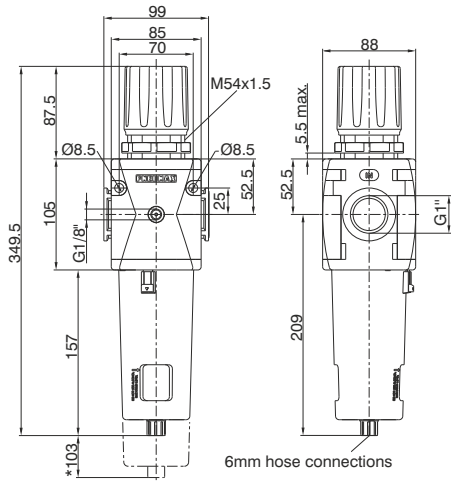

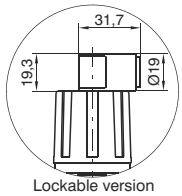

*Bowl removal maximum height

Example : N174BEBC : size 4, Filter-regulator, G1" connections, 20 μm filtering pore size, 0 to 8 bar adjusting range

Flow rate curves

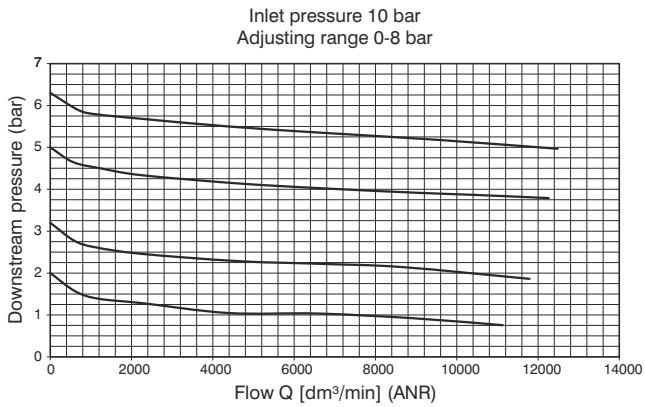

Adjustment characteristics

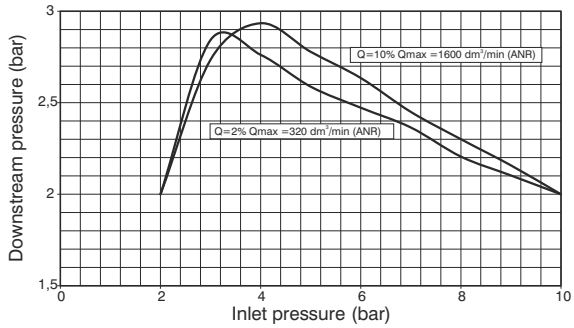

Operational characteristics

- Filter - diaphragm pressure regulator with relieving.
- Low hysteresis rolling diaphragm.
- Balanced system.
- Double filtering action: air flow centrifugation and filter element.
- Filtering element made of HDPE (high density polyethylene) available in three different filtration grades (5μm, 20μm and 50μm) can be regenerated by washing it or replaced.
- Transparent bowl made off polycarbonate with bowl protection guard.
- Bowl assembly via bayonet type quick coupling mechanism with safety button.
- Semi-automatic drain mounted as standard; automatic drain upon request.
- Available in four pressure ranges up to 12 bar.
- Operating knob can be locked in position by pressing it down once the desired P2 (regulated pressure) pressure value is achieved.
- Fitted with panel mounting locking ring.

Note

The pressure must be always regulating while increasing. For a more precise regulation and higher sensibility, the use of a regulator with a pressure range as close as possible to the regulated pressure is recommended. In order to ensure adequate flow on the auto drain version it is recommended to use minimum a 6mm fitting.

Technical characteristics

Connections	G1”
Max. inlet pressure	13 bar
Minimum working pressure with automatic drain	0,5 bar
Maximum working pressure with automatic drain	10 bar
Working temperature	-5°C +50°C
Pressure gauge connections	G 1/8”
Weight	1450 (gr)
Pressure range	0-2 bar / 0-4 bar 0-8 bar / 0-12 bar
Filter pore size	5 μm - 20 μm - 50 μm
Bowl capacity	90 cm^3
Assembly positions	Vertical
Wall fixing screw	M8

Ordering code

N174BE(S)(G)(T)(O)(Z)

(S)	FILTER PORE SIZE
	A = 5 μm
	B = 20 μm
	C = 50 μm
(G)	ADJUSTING RANGE
	A = 0-2 bar
	B = 0-4 bar
	C = 0-8 bar
	D = 0-12 bar
(T)	TYPE
	= Standard *
	S = Automatic drain
(O)	OPTIONS
	= Standard *
	K = Lockable version
(Z)	BOWL OPTIONS
	= Standard *
	N = Nylon bowl

* no additional letter required

Filter-regulator including gauge (EM)(EW)

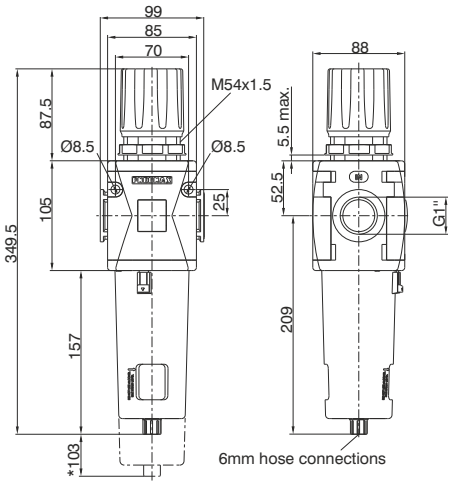

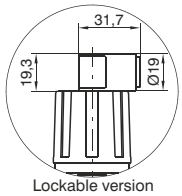

Lockable version
Detail

*Bowl removal maximum height

Example: N174BEMBC : size 4, Filter-regulator including gauge, G1" connections, with 20 µm filtering pore size, 0 to 8 bar adjusting range

Flow rate curves

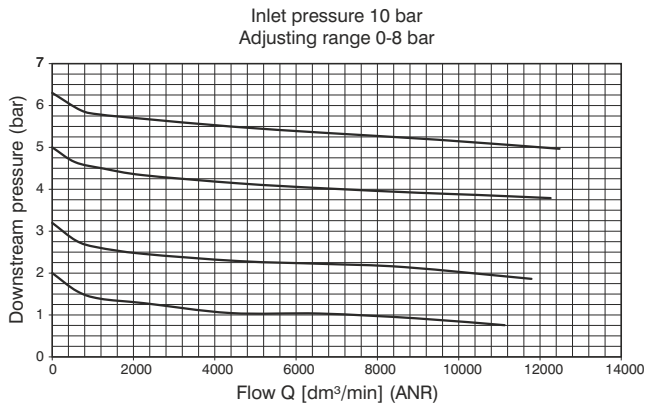

Adjustment characteristics

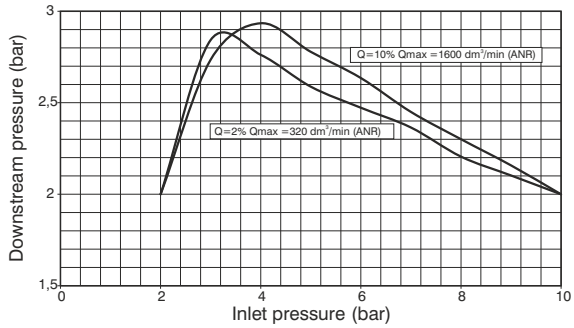

Operational characteristics

- Filter - diaphragm pressure regulator with relieving.
- Low hysteresis rolling diaphragm.
- Balanced system.
- Double filtering action: air flow centrifugation and filter element.
- Filtering element made of HDPE (high density polyethylene) available in three different filtration grades (5µm, 20µm and 50µm) can be regenerated by washing it or replaced.
- Transparent bowl made of polycarbonate with bowl protection guard.
- Bowl assembly via bayonet type quick coupling mechanism with safety button.
- Semi-automatic drain mounted as standard; automatic drain upon request.
- Available in four pressure ranges up to 12 bar.
- Operating knob can be locked in position by pressing it down once the desired P2 (regulated pressure) pressure value is achieved.
- Fitted with panel mounting locking ring.
- Integrated manometer 0-12 bar as standard (for 0-8 and 0-12 bar range) and 0-4 bar (for 0-2 and 0-4 range)

Note

The pressure must be always regulating while increasing. For a more precise regulation and higher sensibility, the use of a regulator with a pressure range as close as possible to the regulated pressure is recommended. In order to ensure adequate flow on the auto drain version it is recommended to use minimum a 6mm fitting.

Technical characteristics

Connections	G1"
Max. inlet pressure	13 bar
Minimum working pressure with automatic drain	0,5 bar
Maximum working pressure with automatic drain	10 bar
Working temperature	-5°C +50°C
Weight	1440 (gr)
Pressure range	0-2 bar / 0-4 bar 0-8 bar / 0-12 bar
Filter pore size	5 µm - 20 µm - 50 µm
Bowl capacity	90 cm³
Assembly positions	Vertical
Wall fixing screw	M8

Ordering code

N174BEⒹⓈⒼⓉⓄⓏ

Ⓓ	FLOW DIRECTION
	M = from left to right
	W = from right to left
Ⓢ	FILTER PORE SIZE
	A = 5 µm
	B = 20 µm
	C = 50 µm
Ⓖ	ADJUSTING RANGE
	A = 0-2 bar
	B = 0-4 bar
	C = 0-8 bar
	D = 0-12 bar
Ⓣ	TYPE
	= Standard *
	S = Automatic drain
Ⓞ	OPTIONS
	= Standard *
	K = Lockable version
Ⓩ	BOWL OPTIONS
	= Standard *
	N = Nylon bowl

* no additional letter required

Regulator with pressure switch (RP)(RZ)

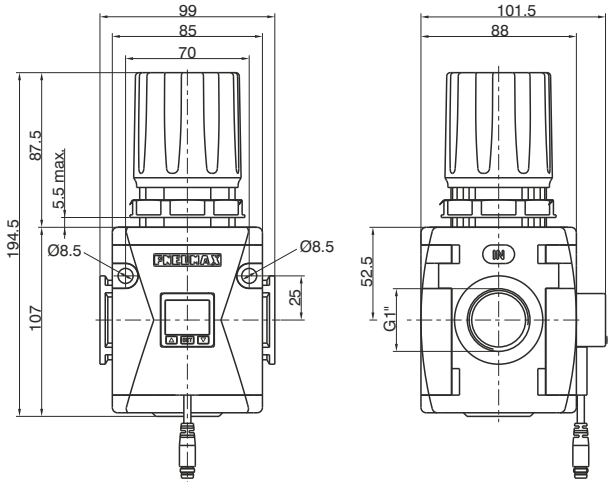

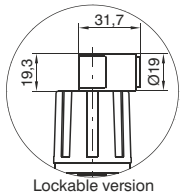

Lockable version
Detail

Example : N174BRPCA : size 4, Regulator, G1" connections, 0 to 8 bar adjusting range, with pressure switch with M8 connector PNP

Flow rate curves

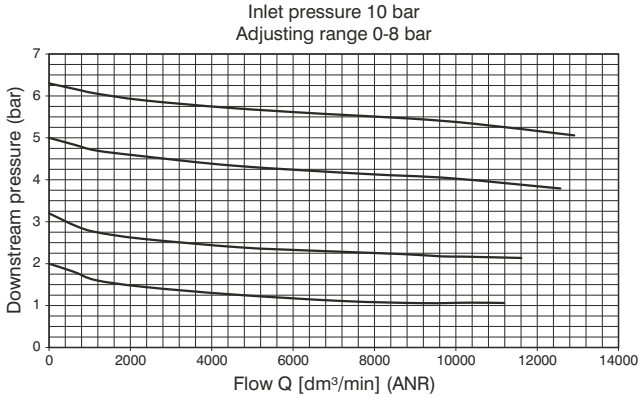

Adjustment characteristics

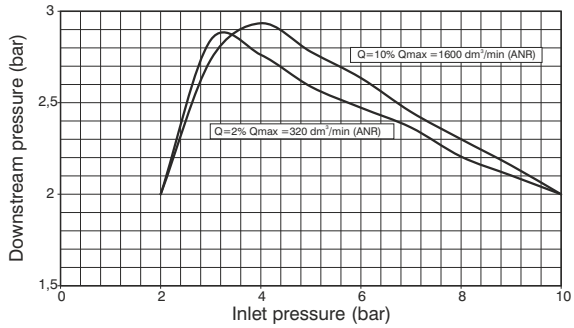

Operational characteristics

- Diaphragm pressure regulator with relieving.
- Low hysteresis rolling diaphragm.
- Balanced system.
- Available in four pressure ranges up to 12 bar.
- Operating knob can be locked in position by pressing it down once the desired P2 (regulated pressure) pressure value is achieved.
- Fitted with panel mounting locking ring.
- Pressure switch as standard

Note

The pressure must be always regulating while increasing. For a more precise regulation and higher sensibility, the use of a regulator with a pressure range as close as possible to the regulated pressure is recommended.

Technical characteristics

Connections	G1”
Max. inlet pressure	13 bar
Working temperature	0°C +50°C
Weight	1260 (gr)
Pressure range	0-2 bar / 0-4 bar 0-8 bar / 0-12 bar
Assembly positions	Indifferent
Wall fixing screw	M8

Ordering code

N174BRⒹⒼ⒯⒪Ⓟ

Ⓓ	FLOW DIRECTION
	P = from left to right
	Z = from right to left
Ⓖ	ADJUSTING RANGE
	A = 0-2 bar
	B = 0-4 bar
	C = 0-8 bar
	D = 0-12 bar
Ⓣ	TYPE
	= Standard *
	L = no relieving
	R = Improved relieving
Ⓞ	OPTIONS
	= Standard *
	K = Lockable version
Ⓟ	PRESSURE SWITCH OPTION
	A = Cable 150 mm+M8 PNP
	B = Cable 150 mm+M8 NPN
	C = Cable 2 mt. PNP
	D = Cable 2 mt. NPN

* no additional letter required

Piloted pressure regulator with digital pressure switch (RP)(RZ)

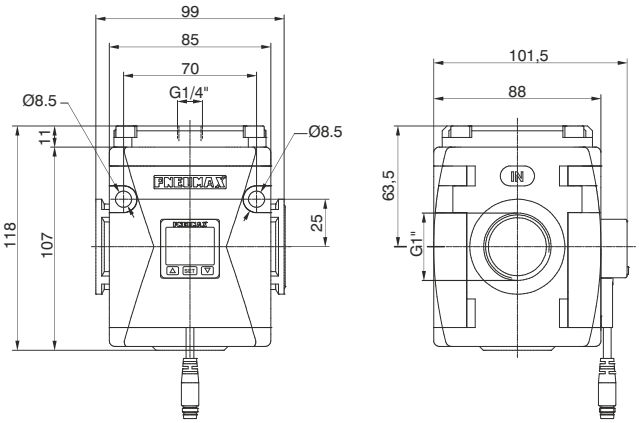

Example: N174BRPAP : size 4, Piloted pressure regulator, G1" connections, with pressure switch with M8 connector PNP

Flow rate curves

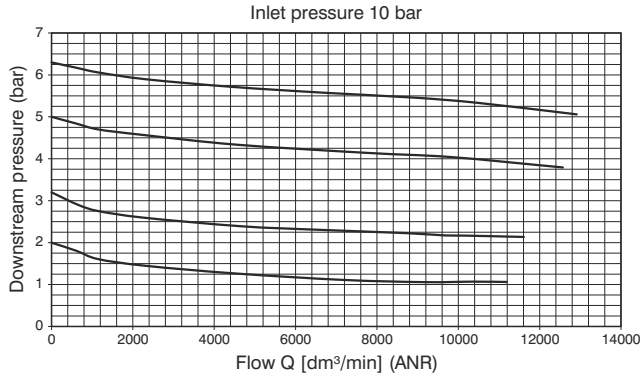

Adjustment characteristics

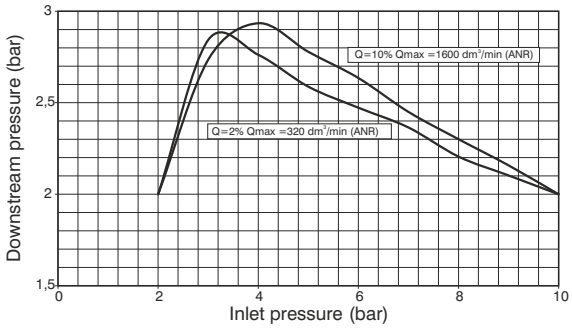

Piloting curves

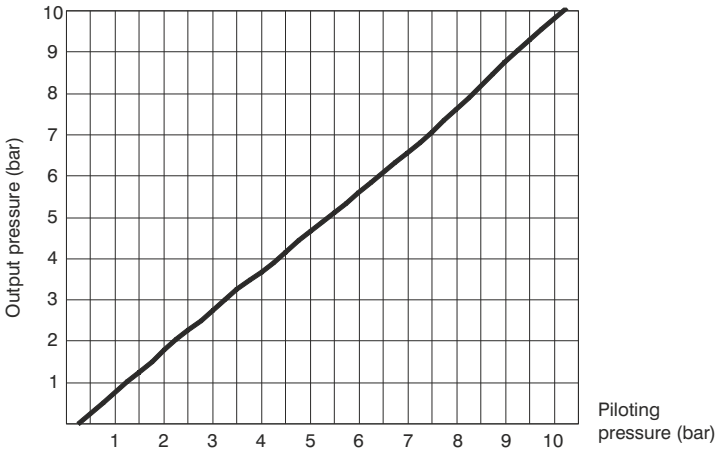

Operational characteristics	Technical characteristics		
- Piston pressure regulator with relieving	Connections	G1”	
- Balanced system	Pilot port size	G1/4"	
- Pressure switch as standard	Max. inlet pressure	13 bar	
Note	Working temperature	-5°C +50°C	
Always regulate the rising pressure.	Pressure gauge connections	G 1/8”	
	Weight	1190 (gr)	
	Assembly positions	Indifferent	
	Wall fixing screw	M8	

Ordering code

N174BRⒹⓅP

Ⓓ	FLOW DIRECTION
	P = from left to right
	Z = from right to left
Ⓟ	PRESSURE SWITCH OPTION
	A = Cable 150 mm+M8 PNP
	B = Cable 150 mm+M8 NPN
	C = Cable 2 mt. PNP
	D = Cable 2 mt. NPN

3

Filter regulator with pressure switch (EP)(EZ)

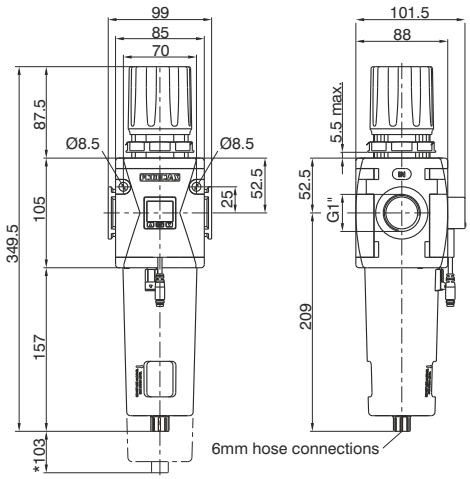

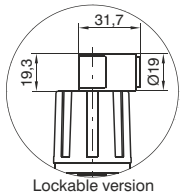

Lockable version
Detail

*Bowl removal maximum height

Example: N174BEPBCA : size 4, Filter-regulator, G1" connections, 20 μm filtering pore size, 0 to 8 bar adjusting range, with pressure switch with M8 connector PNP

Flow rate curves

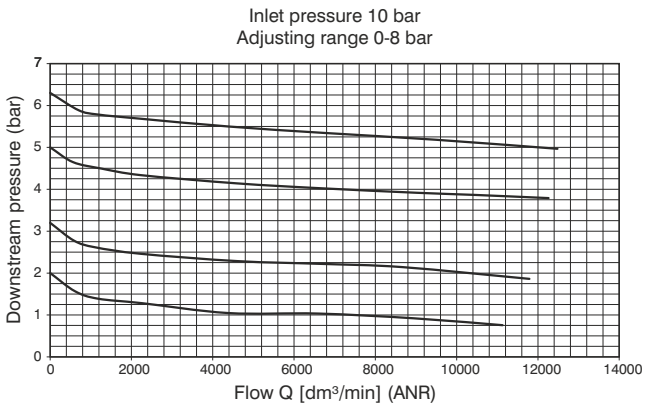

Adjustment characteristics

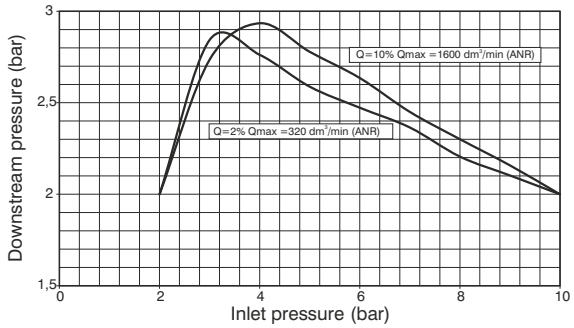

Operational characteristics

- Filter - diaphragm pressure regulator with relieving.
- Low hysteresis rolling diaphragm.
- Balanced system.
- Double filtering action: air flow centrifugation and filter element.
- Filtering element made of HDPE (high density polyethylene) available in three different filtration grades (5μm, 20μm and 50μm) can be regenerated by washing it or replaced.
- Transparent bowl made of polycarbonate with bowl protection guard.
- Bowl assembly via bayonet type quick coupling mechanism with safety button.
- Semi-automatic drain mounted as standard; automatic drain upon request.
- Available in four pressure ranges up to 12 bar.
- Operating knob can be locked in position by pressing it down once the desired P2 (regulated pressure) pressure value is achieved.
- Fitted with panel mounting locking ring.
- Pressure switch as standard

Note

The pressure must be always regulating while increasing. For a more precise regulation and higher sensibility, the use of a regulator with a pressure range as close as possible to the regulated pressure is recommended. In order to ensure adequate flow on the auto drain version it is recommended to use minimum a 6mm fitting.

Technical characteristics

Connections	G1”
Max. inlet pressure	13 bar
Minimum working pressure with automatic drain	0,5 bar
Maximum working pressure with automatic drain	10 bar
Working temperature	0°C +50°C
Weight	1490 (gr)
Pressure range	0-2 bar / 0-4 bar 0-8 bar / 0-12 bar
Filter pore size	5 μm - 20 μm - 50 μm
Bowl capacity	90 cm^3
Assembly positions	Vertical
Wall fixing screw	M8

Ordering code

N174BE D S G T O P Z

D	FLOW DIRECTION
	P = from left to right
	Z = from right to left
S	FILTER PORE SIZE
	A = 5 μm
	B = 20 μm
	C = 50 μm
G	ADJUSTING RANGE
	A = 0-2 bar
	B = 0-4 bar
	C = 0-8 bar
	D = 0-12 bar
T	TYPE
	= Standard *
	S = Automatic drain
O	OPTIONS
	= Standard *
	K = Lockable version
P	PRESSURE SWITCH OPTION
	A = Cable 150 mm+M8 PNP
	B = Cable 150 mm+M8 NPN
	C = Cable 2 mt. PNP
	D = Cable 2 mt. NPN
Z	BOWL OPTIONS
	= Standard *
	N = Nylon bowl

* no additional letter required

CHARACTERISTICS

- 3 color digital LCD display, easy readout
- 4 units of measurement for pressure indication
- PNP and NPN output
- N.O. and N.C. output contact
- Not available individually, but only with a Regulator or a Filter-regulator

OUTPUT CIRCUIT WIRING DIAGRAMS

PNP output

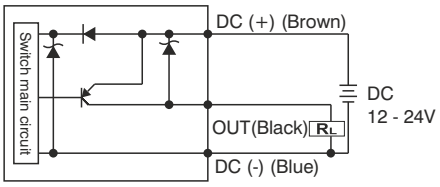

NPN output

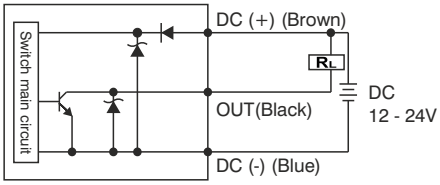

M8 CONNECTOR PIN LAY OUT

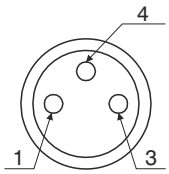

1 : (+)
3 : (-)
4 : (OUT)

3 WIRES CABLE LAY OUT

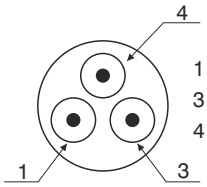

1 : Brown (+)
3 : Blue (-)
4 : Black (OUT)

Cable ordering code

MCH1	cable 3 wires l=2,5m with M8 connector
MCH2	cable 3 wires l=5m with M8 connector
MCH3	cable 3 wires l=10m with M8 connector

Connector

TECHNICAL CHARACTERISTICS	
Adjusting range	0 - 10 bar / 0 - 1MPa
Max. inlet pressure	15 bar / 1,5 MPa
Fluid	Filtered and dehumidified air
Display unit of measurement	MPa - kgf/cm² - bar - psi
Supply voltage	12 - 24 VDC
Current consumption	≤40mA (without load)
Digital output type	NPN - PNP
Type of contact	Normally Open - Normally Closed
Max. load current	125 mA
Digital output activation mode	single threshold with fixed hysteresis - window with fixed hysteresis - window without hysteresis
Digital output activation time	0.05s - 0.25s - 0.5s - 1s - 2s - 3s (selections for chattering-proof function)
Display characteristics	Double 3 1/2 digit display Digital output status indication Three-pushbuttons touchpad
Indicator accuracy	≤±2% F.S. ± 1 digit
Protection grade	IP 40
Temperature	0 - 50 °C
Cable section	3 x 0,129mm², Ø4 mm, PVC

Lubricator (L)

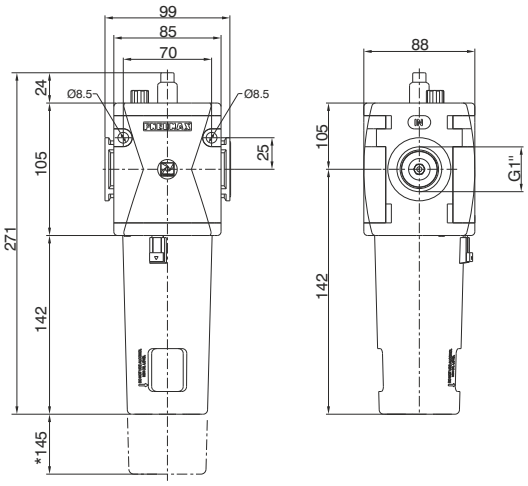

*Bowl removal maximum height

Example : N174BL : size 4, Lubricator, G1" connections

Flow rate curves

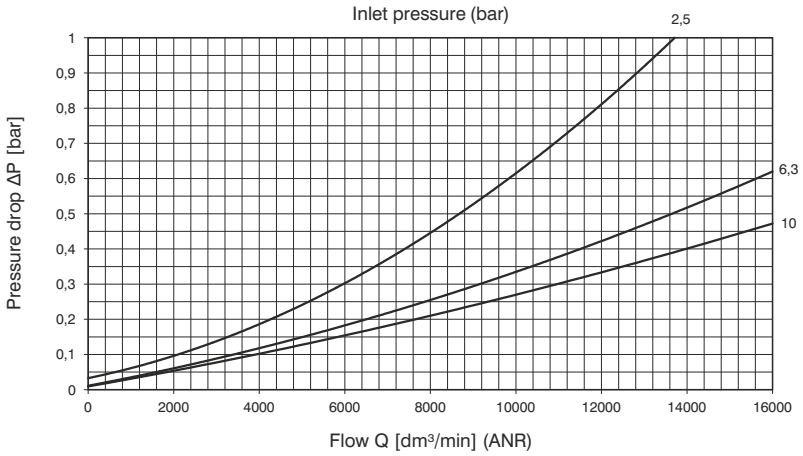

Operational characteristics

- Oil mist lubrication with variable orifice size in function of the flow rate
- Oil quantity regulation mechanism and oil quantity visualization dome made of polycarbonate.
- Transparent bowl made off polycarbonate with bowl protection guard.
- Bowl assembly via bayonet type quick coupling mechanism with safety button.
- Oil filling plug
- Oil can be refilled with pressurized circuit.
- Available with electric min-level sensor N.O. or N.C. with connection for connector.
- For electrical connection use connectors type C1-C2-C3 (see sensors chapter in the catalogue).

Note

Install as close as possible to the point o fuse
Do not use alcohol, deterging oils or solvents.

Technical characteristics

Connections	G1”
Max. inlet pressure	13 bar
Working temperature	-5°C +50°C
Weight	1025 (gr)
Indicative oil drop rate	1 drop every 300/600 NI
Oil type	FD22 - HG32
Bowl capacity	360 cm^3
Assembly positions	Vertical
Min. operational flow at 6,3 bar	100 dm^3/min. (ANR)
Wall fixing screw	M8

Ordering code

N174BL⓪Ⓩ

⓪	OPTIONS A = Min. Oil level indicator Normally open C = Min. Oil level indicator Normally closed
Ⓩ	BOWL OPTIONS = Standard * N = Nylon bowl

* no additional letter required

Shut-off valve (VL)

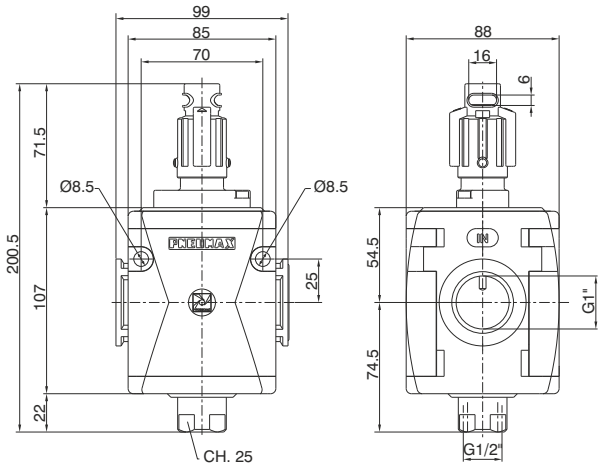

Example: N174BVL : size 4, Shut-off valve, G1" connections

Operational characteristics

- Manual operated 3 ways poppet valve.
- Double handle action for valve opening: pushing and rotating (clockwise).
- The valve can be closed and the down stream circuit depressurized by rotating anticlockwise the knob.
- Knob lockable with three padlocks.

Technical characteristics

		Ordering code
Connections	G1”	
Max. inlet pressure	10 bar	**N174BVL**
Working temperature	-5°C +50°C	
Weight	1100 (gr)	
Assembly positions	Indifferent	
Handle opening and closing angle	90°	
Nominal flow rate at 6 bar with Δp=1 (from 1 to 2)	15000 dm^3/min. (ANR)	
Exhaust nominal flow rate at 6 bar with Δp=1 (from 2 to 3)	3600 dm^3/min. (ANR)	
Nominal flow rate with free exhaust at 6 bar (from 2 to 3)	5000 dm^3/min. (ANR)	
Wall fixing screw	M8	

Pneumatic shut-off valve (VP)

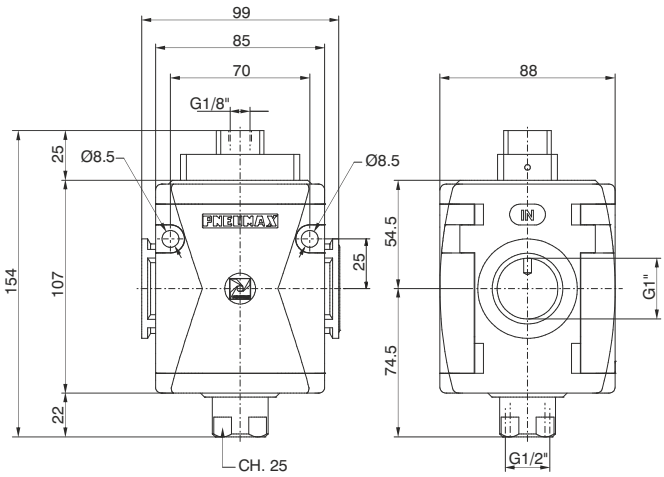

Example: N174BVP : size 4, Pneumatic shut-off valve with Technopolymer threads, G1" connections

Operational characteristics

- Pneumatic operated 3 ways poppet valve.
- When the pneumatic signal is removed the valves exhaust the pneumatic circuit

Technical characteristics

		Ordering code
Connections	G1”	
Discharge connection	G1/2"	**N174BVP**
Pilot port size	G1/8"	
Working temperature	-5°C +50°C	
Weight	gr. 1.133	
Assembly positions	Indifferent	
Min. pressure working	2,5 bar	
Max. pressure working	10 bar	
Nominal flow rate at 6 bar with Δp=1 (from 1 to 2)	15000 dm^3/min. (ANR)	
Exhaust nominal flow rate at 6 bar with Δp=1 (from 2 to 3)	3600 dm^3/min. (ANR)	
Nominal flow rate with free exhaust at 6 bar (from 2 to 3)	5000 dm^3/min. (ANR)	
Wall fixing screw	M8	

Electric shut-off valve (VE)

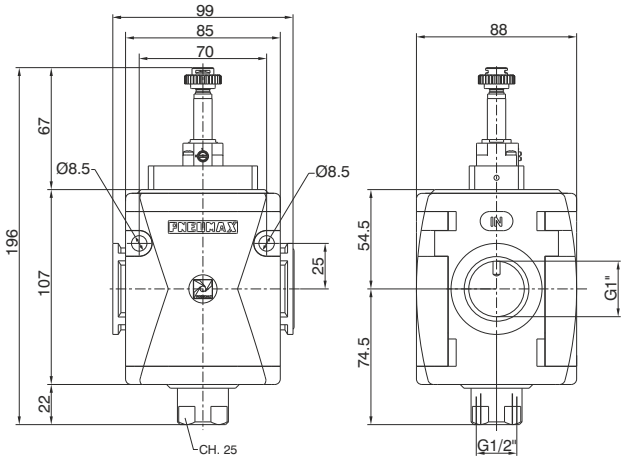

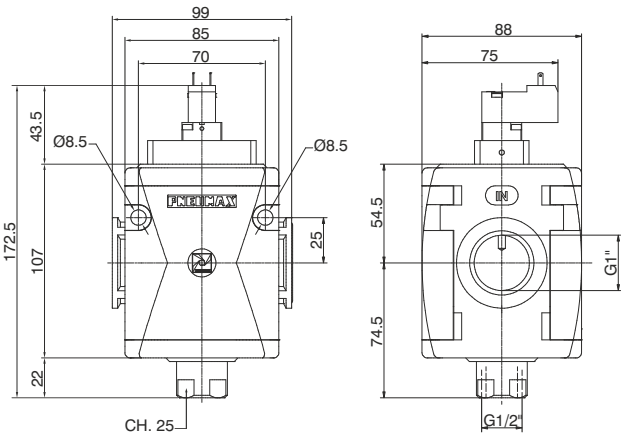

Example : N174BVEB2 : size 4, Electric shut-off valve, with M2 Pilot without coil, G1" connections

Operational characteristics

- Solenoid operated 3 ways poppet valve.
- The model fitted with 15 mm pilots uses pilots series N33_0A and N33_0E (1 Watt)

Technical characteristics

Supply and operating connections	G1”
Discharge connections	G 1/2”
Working temperature	-5°C +50°C
Weight	1170 (gr)
Assembly positions	Indifferent
Min. Pressure working	2,5 bar
Max. Pressure working	10 bar
Nominal flow rate at 6 bar with Δp=1 (from 1 to 2)	15000 dm^3/min. (ANR)
Exhaust nominal flow rate at 6 bar with Δp=1 (from 2 to 3)	3600 dm^3/min. (ANR)
Nominal flow rate with free exhaust at 6 bar (from 2 to 3)	5000 dm^3/min. (ANR)
Wall fixing screw	M8

Ordering code

N174BVE Ⓐ

Ⓐ	
	15 mm COIL VOLTAGE
	A4 = 12 V DC
	A5 = 24 V DC
	A6 = 24 V AC (50-60 Hz)
	A7 = 110 V AC (50-60 Hz)
	A8 = 230 V AC (50-60 Hz)
	A9 = 24 V DC (1 Watt)
	22 mm COIL VOLTAGE
	B2 = Wthout coil M2 mechanic
	B4 = 12 V DC
	B5 = 24 V DC
	B6 = 24 V AC (50-60 Hz)
	B7 = 110 V AC (50-60 Hz)
	B8 = 230 V AC (50-60 Hz)
	B9 = 24 V DC (2 Watt)
	30 mm COIL VOLTAGE
	C5 = 24 V DC
	C6 = 24 V AC (50-60 Hz)
	C7 = 110 V AC (50-60 Hz)
	C8 = 230 V AC (50-60 Hz)
	C9 = 24 V DC (2 Watt)

Progressive start-up valve (AP)

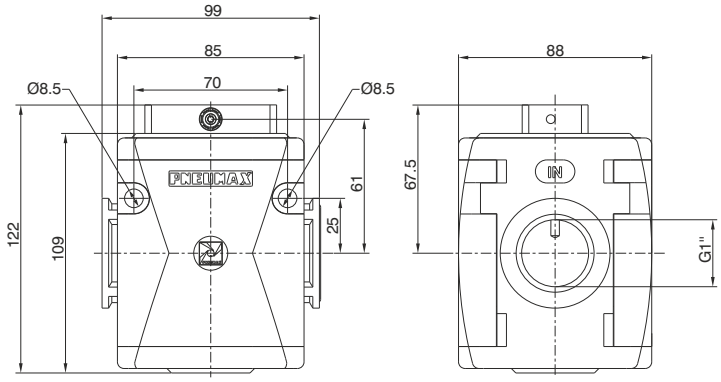

Example : N174BAP : size 4, Progressive start-up valve, G1" connections

Operational characteristics	Technical characteristics		
- Down stream circuit filling time regulated via a built in flow regulator. - Full pressure is allowed once the down stream circuit pressure reaches 50% of the inlet pressure.	Connections	G1”	Ordering code
	Max. inlet pressure	13 bar	**N174BAP(D)**
	Working temperature	-5°C +50°C	
	Weight	1100 (gr)	(D) FLOW DIRECTION
	Assembly positions	Indifferent	= from left to right
	Min. pressure working	2,5 (bar)	W = from right to left
	Nominal flow rate at 6 bar with Δp=1	15000 dm^3/min. (ANR)	
	Fully open built in flow regulator flow rate	1000 dm^3/min. (ANR)	
	Wall fixing screw	M8	

Air intake (PA)

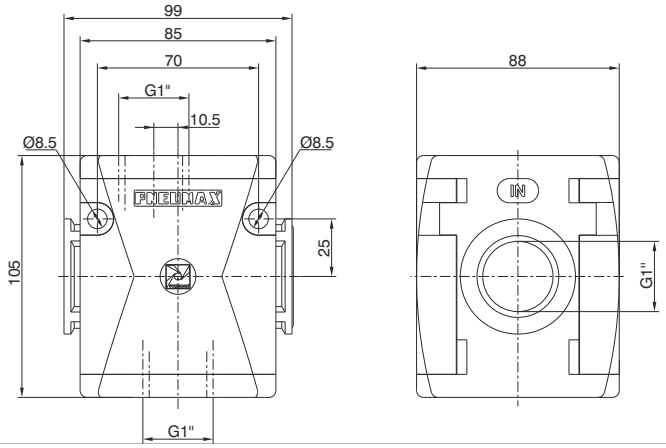

Example : N174BPA : size 4, Air intake, G1" connections

Operational characteristics	Technical characteristics		
- Available with two G1" threaded connections.	Connections	G1”	Ordering code
	Max. inlet pressure	13 bar	**N174BPA**
	Working temperature	-5°C +50°C	
	Weight	720 (gr)	
	Assembly positions	Indifferent	
	Wall fixing screw	M8	

Pressure switch (PP)

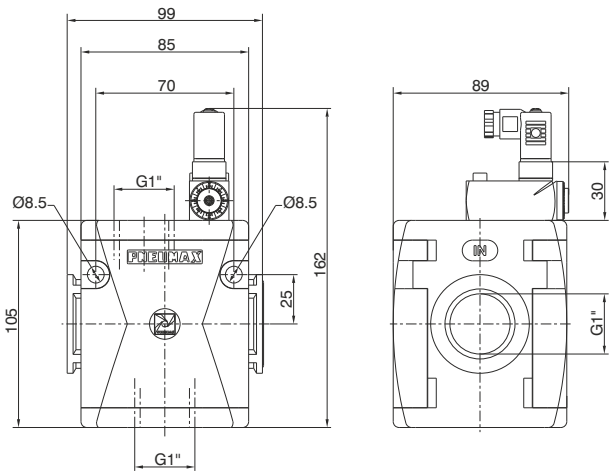

Example: N174BPP : Size 4, Pressure switch, G1" connections

Operational characteristics

- Built in adjustable pressure switch (2 to 10 bar) with electrical connection.
- Available with two G1" threaded connections.
- The electrical connection is made by mean of a 15 mm connector DIN 43650 type C. The microswitch contact could be normally closed or open (change overswitch).

Technical characteristics

Connections	G1”
Max. inlet pressure	13 bar
Working temperature	-5°C +50°C
Weight	800 (gr)
Microswitch capacity	1A
Grade of protection (with connector assembled)	IP 65
Adjusting range	2 -10 bar
Assembly positions	Indifferent
Microswitch maximum tension	250 VAC
Wall fixing screw	M8

Ordering code

N174BPP Ⓓ

Ⓓ	FLOW DIRECTION
	= from left to right
	W = from right to left

Connection

1 = neutral
2 = N.C. contact
3 = N.O. contact

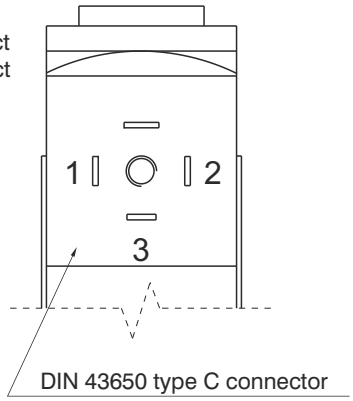

Flange X

Ordering code
T174X

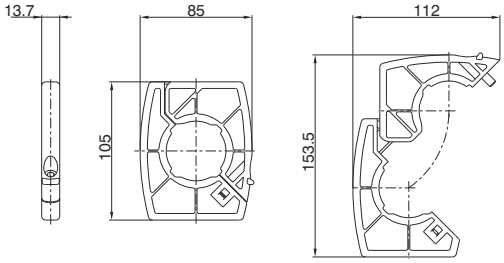

Weight 90 gr.
Example : T174X : Size 4 coupling flange
- Enables the quick connnection of two functions.

Flange Y

Ordering code
T174Y

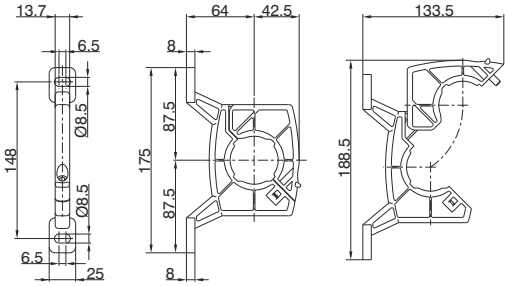

Weight 120 gr.
Example : T174Y : Size 4 coupling flange with mounting holes
- Used to couple together two elements and
  to panel mount them.
- Used to panel mount one single element.

Pressure gauge

Ordering code
17070Ⓥ.Ⓢ

Ⓥ	VERSION
	A = Dial Ø40
	B = Dial Ø50
Ⓢ	SCALE
	A = Scale 0-4 bar
	B = Scale 0-6 bar
	C = Scale 0-12 bar

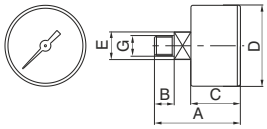

DIMENSIONS

CODE	A	B	C	D	E	G	Weight gr.
17070A	44	10	26	41	14	1/8"	60
17070B	45	10	27	49	14	1/8"	80

Service unit assembled (EM+L) (E+L) (EW+L)

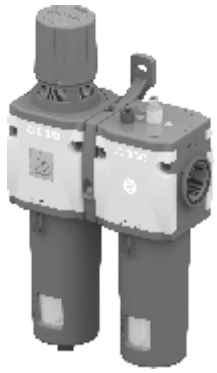

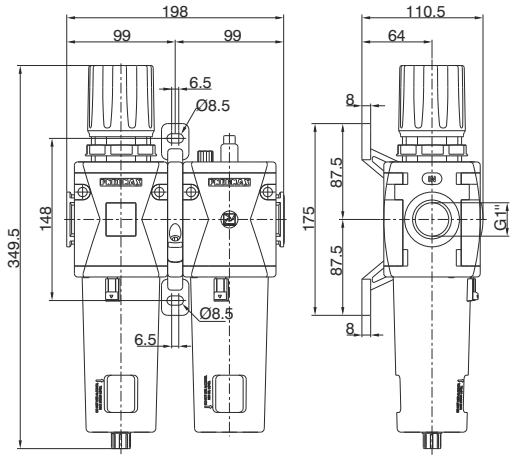

Example : GN174BHG : size 4, combined group comprising Filter-regulator and Lubricator, G1" connections, 0 to 8 bar adjusting range and 20 μm filter pore size

Operational characteristics

Combined group comprising Filter-regulator with built in manometer and Lubricator assembled with a (Y) type coupling kit for panel mounting.
Integrated manometer 0-12 bar as standard (for 0-8 and 0-12 bar range) and 0-4 bar (for 0-2 and 0-4 range)

Note

The pressure must be always regulating while increasing. For a more precise regulation and higher sensibility, the use of a regulator with a pressure range as close as possible to the regulated pressure is recommended.

Technical characteristics

Connections	G1"
Max. inlet pressure	13 bar
Working temperature	-5°C +50°C
Weight	2585 (gr)
Pressure range	0-2 bar / 0-4 bar 0-8 bar / 0-12 bar
Filter pore size	5 μm - 20 μm - 50 μm
Bowl capacity	90 cm^3
Indicative oil drop rate	1 drop every 300/600 Nl
Oil type	FD22 - HG32
Bowl capacity	360 cm^3
Assembly positions	Vertical
Min. operational flow rate at 6,3 bar	100 dm^3/min. (ANR)
Wall fixing screw	M8

Ordering code

GN174BⓉⓈⓄⒹⓏ

Ⓣ	TYPE
	H = Built in gauge
	J = G1/8" gauge connection
Ⓢ	FILTER PORE SIZE ADJUSTING RANGE
	C = 5 μm / 0-8 bar
	D = 5 μm / 0-12 bar
	G = 20 μm / 0-8 bar
	H = 20 μm / 0-12 bar
	N = 50 μm / 0-8 bar
	P = 50 μm / 0-12 bar
Ⓞ	OPTIONS
	= Standard *
	A = Min.oil level indicator NO
	C = Min.oil level indicator NC
	S = Automatic drain
	SA = Automatic drain + Min.oil level indicator NO
	SC = Automatic drain + Min.oil level indicator NC
Ⓓ	FLOW DIRECTION
	= Standard * (from left to right)
	W = from right to left
Ⓩ	BOWL OPTIONS
	= Standard *
	N = Nylon bowl

* no additional letter required

3

Service unit assembled (F+RM+L) (F+R+L) (F+RW+L)

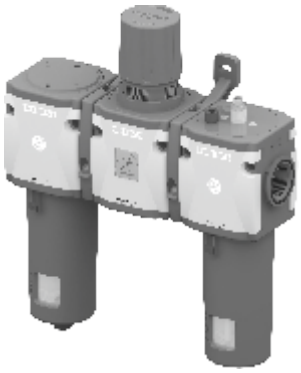

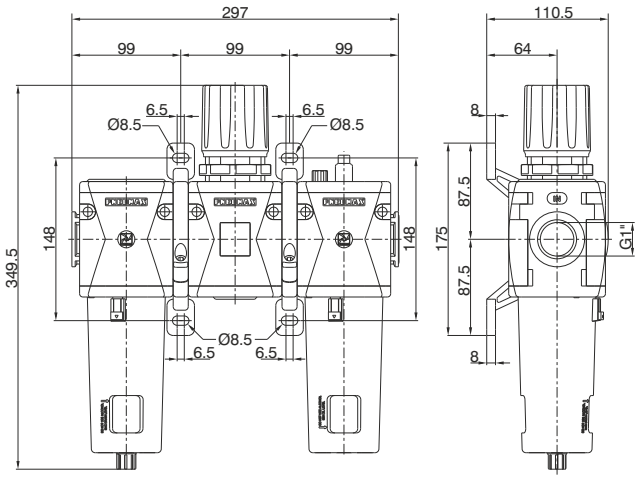

Example : GN174BKG : size 4 combined group comprising Filter, Regulator and Lubricator, G1" connections, 0 to 8 bar adjusting range and 20 μm filter pore size

Operational characteristics

Combined group comprising Filter, Regulator with built in manometer and Lubricator assembled with two (Y) type coupling kits for panel mounting.
Integrated manometer 0-12 bar as standard (for 0-8 and 0-12 bar range) and 0-4 bar (for 0-2 and 0-4 range)

Note

The pressure must be always regulating while increasing. For a more precise regulation and higher sensibility, the use of a regulator with a pressure range as close as possible to the regulated pressure is recommended.

Technical characteristics

Connections	G1”
Max. inlet pressure	13 bar
Working temperature	-5°C +50°C
Weight	3640 (gr)
Pressure range	0-2 bar / 0-4 bar 0-8 bar / 0-12 bar
Filter pore size	5 μm - 20 μm - 50 μm
Bowl capacity	90 cm^3
Indicative oil drop rate	1 drop every 300/600 Nl
Oil type	FD22 - HG32
Bowl capacity	360 cm^3
Assembly positions	Vertical
Min. operational flow rate at 6,3 bar	100 dm^3/min. (ANR)
Wall fixing screw	M8

Ordering code

GN174BⓉⓈⓄⒹⓏ

Ⓣ	TYPE
	K = Built in gauge
	T = G1/8" gauge connection
Ⓢ	FILTER PORE SIZE ADJUSTING RANGE
	C = 5 μm / 0-8 bar
	D = 5 μm / 0-12 bar
	G = 20 μm / 0-8 bar
	H = 20 μm / 0-12 bar
	N = 50 μm / 0-8 bar
	P = 50 μm / 0-12 bar
Ⓞ	OPTIONS
	= Standard *
	A = Min.oil level indicator NO
	C = Min.oil level indicator NC
	S = Automatic drain
	SA = Automatic drain + Min.oil level indicator NO
	SC = Automatic drain + Min.oil level indicator NC
Ⓓ	FLOW DIRECTION
	= Standard * (from left to right)
	W = from right to left
Ⓩ	BOWL OPTIONS
	= Standard *
	N = Nylon bowl

* no additional letter required

Service unit assembled (EM+PA+L) (E+PA+L) (EW+PA+L)

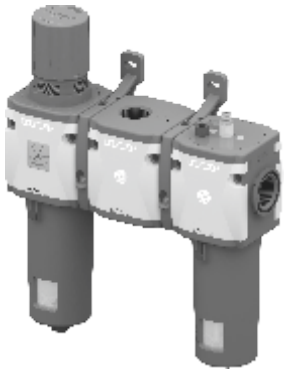

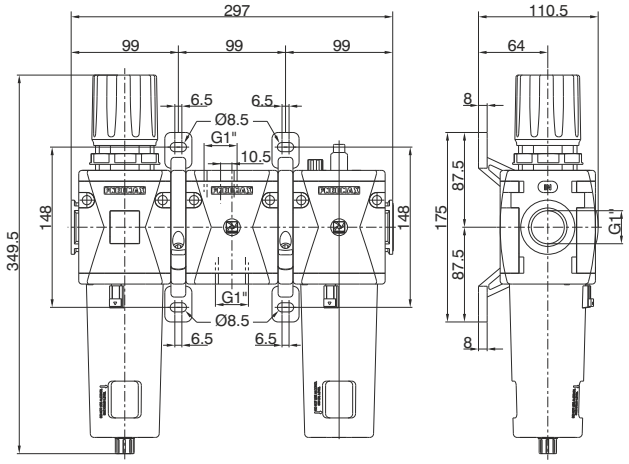

Example : GN174BNG : size 4 combined group comprising Filter-regulator, Air intake and Lubricator, G1" connections, 0 to 8 bar adjusting range and 20 μm filter pore size

Operational characteristics

Combined group comprising Filter-regulator with built in manometer, Air intake and Lubricator assembled with two (Y) type coupling kits for panel mounting. Integrated manometer 0-12 bar as standard (for 0-8 and 0-12 bar range) and 0-4 bar (for 0-2 and 0-4 range)

Note

The pressure must be always regulating while increasing. For a more precise regulation and higher sensibility, the use of a regulator with a pressure range as close as possible to the regulated pressure is recommended.

Technical characteristics

Connections	G1”
Max. inlet pressure	13 bar
Working temperature	-5°C +50°C
Weight	3425 (gr)
Pressure range	0-2 bar / 0-4 bar 0-8 bar / 0-12 bar
Filter pore size	5 μm - 20 μm - 50 μm
Bowl capacity	90 cm^3
Indicative oil drop rate	1 drop every 300/600 Nl
Oil type	FD22 - HG32
Bowl capacity	360 cm^3
Assembly positions	Vertical
Min. operational flow rate at 6,3 bar	100 dm^3/min. (ANR)
Wall fixing screw	M8

Ordering code

GN174BⓉⓈⓄⒹⓏ

Ⓣ	TYPE
	N = Built in gauge
	P = G1/8" gauge connection
Ⓢ	FILTER PORE SIZE ADJUSTING RANGE
	C = 5 μm / 0-8 bar
	D = 5 μm / 0-12 bar
	G = 20 μm / 0-8 bar
	H = 20 μm / 0-12 bar
	N = 50 μm / 0-8 bar
	P = 50 μm / 0-12 bar
Ⓞ	OPTIONS
	= Standard *
	A = Min.oil level indicator NO
	C = Min.oil level indicator NC
	S = Automatic drain
	SA = Automatic drain + Min.oil level indicator NO
	SC = Automatic drain + Min.oil level indicator NC
Ⓓ	FLOW DIRECTION
	= Standard * (from left to right)
	W = from right to left
Ⓩ	BOWL OPTIONS
	= Standard *
	N = Nylon bowl

* no additional letter required

3

Service unit assembled (EM+PP+L) (E+PP+L) (EW+PP+L)

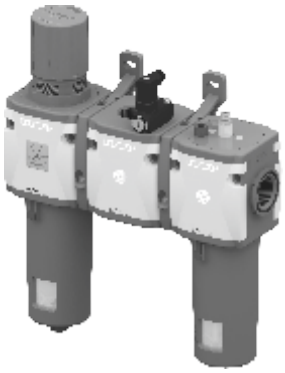

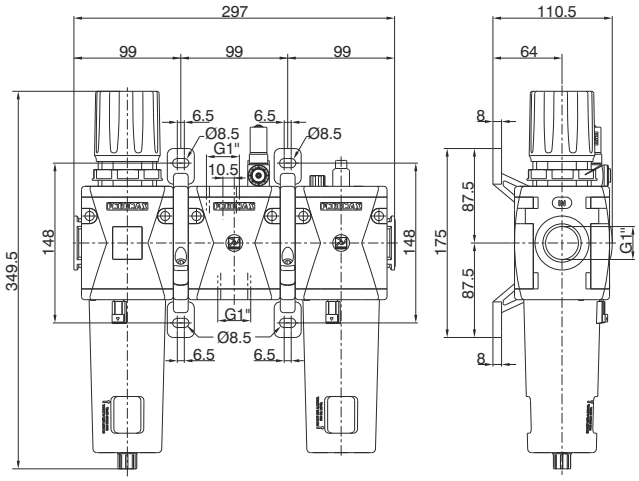

Example : GN174BRG : size 4 combined group comprising Filter-Regulator, Pressure switch and Lubricator, G1" connections 0 to 8 bar adjusting range and 20 μm filter pore size

Operational characteristics

Combined group comprising Filter-regulator with built in manometer, Pressure switch and Lubricator assembled with two (Y) type coupling kits for panel mountings.
Integrated manometer 0-12 bar as standard (for 0-8 and 0-12 bar range) and 0-4 bar (for 0-2 and 0-4 range)

Note

The pressure must be always regulating while increasing. For a more precise regulation and higher sensibility, the use of a regulator with a pressure range as close as possible to the regulated pressure is recommended.

Technical characteristics

Connections	G1"
Max. inlet pressure	13 bar
Working temperature	-5°C +50°C
Weight	3505 (gr)
Pressure range	0-2 bar / 0-4 bar 0-8 bar / 0-12 bar
Filter pore size	5 μm - 20 μm - 50 μm
Bowl capacity	90 cm^3
Indicative oil drop rate	1 drop every 300/600 Nl
Oil type	FD22 - HG32
Bowl capacity	360 cm^3
Assembly positions	Vertical
Min. operational flow rate at 6,3 bar	100 dm^3/min. (ANR)
Wall fixing screw	M8

Ordering code

GN174BⓉⓈⓄⒹⓏ

Ⓣ	TYPE
	R = Built in gauge
	C = G1/8" gauge connection
Ⓢ	FILTER PORE SIZE ADJUSTING RANGE
	C = 5 μm / 0-8 bar
	D = 5 μm / 0-12 bar
	G = 20 μm / 0-8 bar
	H = 20 μm / 0-12 bar
	N = 50 μm / 0-8 bar
	P = 50 μm / 0-12 bar
Ⓞ	OPTIONS
	= Standard *
	A = Min.oil level indicator NO
	C = Min.oil level indicator NC
	S = Automatic drain
	SA = Automatic drain + Min.oil level indicator NO
	SC = Automatic drain + Min.oil level indicator NC
Ⓓ	FLOW DIRECTION
	= Standard * (from left to right)
	W = from right to left
Ⓩ	BOWL OPTIONS
	= Standard *
	N = Nylon bowl

* no additional letter required

Service unit assembled (VL+EM) (VL+E) (VL+EW)

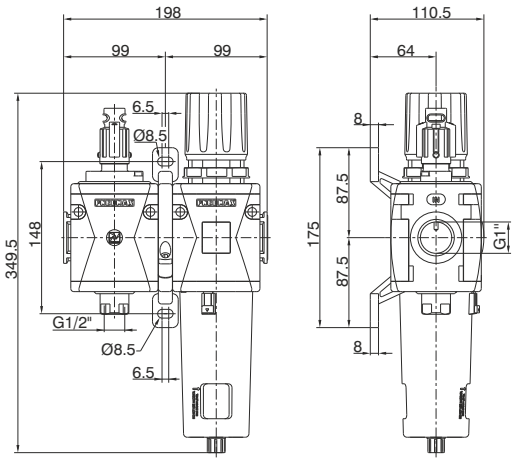

Example : GN174BVGG : size 4 combined group comprising Shut-off valve and Filter-regulator, G1" connections 0 to 8 bar adjusting range and 20 µm filter pore size

Operational characteristics

Combined group comprising manual shut-off valve, Filter - regulator with built in manometer, assembled with one (Y) type coupling kit for panel mountings.
Integrated manometer 0-12 bar as standard (for 0-8 and 0-12 bar range) and 0-4 bar (for 0-2 and 0-4 range)

Note

The pressure must be always regulating while increasing. For a more precise regulation and higher sensibility, the use of a regulator with a pressure range as close as possible to the regulated pressure is recommended.

Technical characteristics

Connections	G1”
Max. inlet pressure	13 bar
Working temperature	-5°C +50°C
Weight	2660 (gr)
Pressure range	0-2 bar / 0-4 bar 0-8 bar / 0-12 bar
Filter pore size	5 µm - 20 µm - 50 µm
Bowl capacity	90 cm³
Indicative oil drop rate	1 drop every 300/600 Nl
Oil type	FD22 - HG32
Bowl capacity	360 cm³
Assembly positions	Vertical
Wall fixing screw	M8

Ordering code

GN174BⓉⓈⓄⒹⓏ

Ⓣ	TYPE VG = Built in gauge VU = G1/8" gauge connection
Ⓢ	FILTER PORE SIZE ADJUSTING RANGE C = 5 µm / 0-8 bar D = 5 µm / 0-12 bar G = 20 µm / 0-8 bar H = 20 µm / 0-12 bar N = 50 µm / 0-8 bar P = 50 µm / 0-12 bar
Ⓞ	OPTIONS = Standard * S = Automatic drain
Ⓓ	FLOW DIRECTION = Standard * (from left to right) W = from right to left
Ⓩ	BOWL OPTIONS = Standard * N = Nylon bowl

* no additional letter required

3

Service unit assembled (VL+EM+L) (VL+E+L) (VL+EW+L)

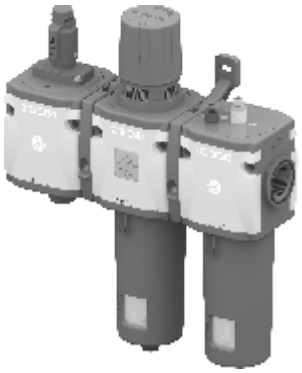

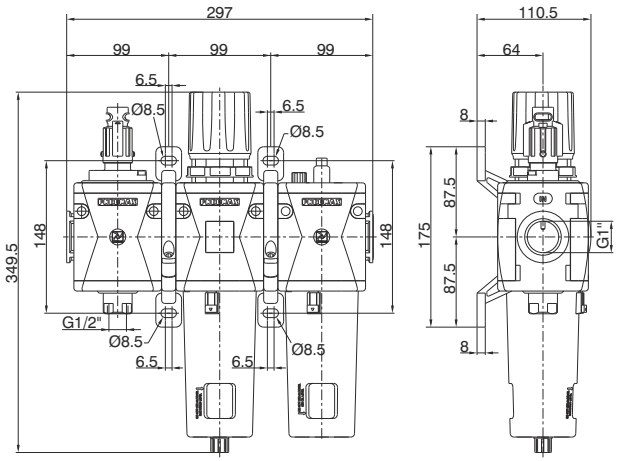

Example : GN174BVHG : Size 4 Combined group comprising Shut-off valve, Filter-regulator and Lubricator, G1" connections 0 to 8 bar adjusting range and 20 μm filter pore size

Operational characteristics

Combined group comprising manual shut-off valve, Filter - regulator with built in manometer and Lubricator assembled with two(Y) type coupling kits for panel mountings.
Integrated manometer 0-12 bar as standard (for 0-8 and 0-12 bar range) and 0-4 bar (for 0-2 and 0-4 range)

Note

The pressure must be always regulating while increasing. For a more precise regulation and higher sensibility, the use of a regulator with a pressure range as close as possible to the regulated pressure is recommended.

Technical characteristics

Connections	G1”
Max. inlet pressure	13 bar
Working temperature	-5°C +50°C
Weight	3805 (gr)
Pressure range	0-2 bar / 0-4 bar 0-8 bar / 0-12 bar
Filter pore size	5 μm - 20 μm - 50 μm
Bowl capacity	90 cm^3
Indicative oil drop rate	1 drop every 300/600 Nl
Oil type	FD22 - HG32
Bowl capacity	360 cm^3
Assembly positions	Vertical
Min. operational flow rate at 6,3 bar	100 dm^3/min. (ANR)
Wall fixing screw	M8

Ordering code

GN174BⓉⓈⓄⒹⓏ

Ⓣ	TYPE
	VH = Built in gauge
	VJ = G1/8" gauge connection
Ⓢ	FILTER PORE SIZE ADJUSTING RANGE
	C = 5 μm / 0-8 bar
	D = 5 μm / 0-12 bar
	G = 20 μm / 0-8 bar
	H = 20 μm / 0-12 bar
	N = 50 μm / 0-8 bar
	P = 50 μm / 0-12 bar
Ⓞ	OPTIONS
	= Standard *
	A = Min.oil level indicator NO
	C = Min.oil level indicator NC
	S = Automatic drain
	SA = Automatic drain + Min.oil level indicator NO
	SC = Automatic drain + Min.oil level indicator NC
Ⓓ	FLOW DIRECTION
	= Standard * (from left to right)
	W = from right to left
Ⓩ	BOWL OPTIONS
	= Standard *
	N = Nylon bowl

* no additional letter required

Service unit assembled (VL+F+RM+L) (VL+F+R+L) (VL+F+RW+L)

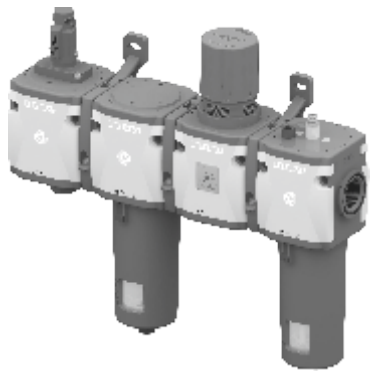

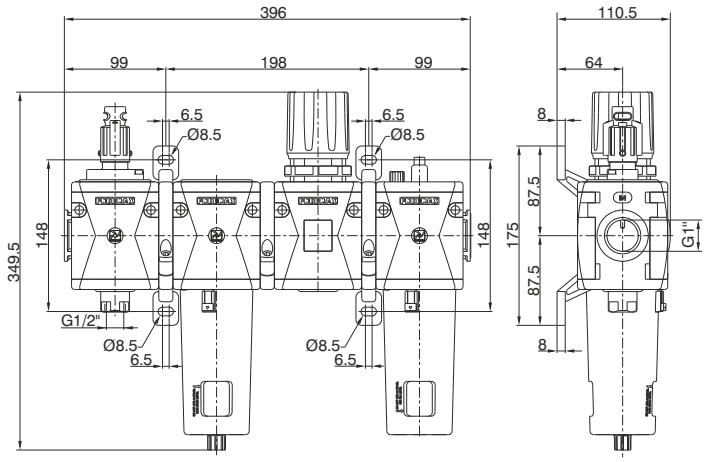

Example : GN174BVKG : size 4 combined group comprising Shut-off valve, Filter, Regulator and Lubricator, G1" connections 0 to 8 bar adjusting range and 20 μm filter pore size

Operational characteristics

Combined group comprising manual shut - off valve, Filter, Regulator with built in manometer and Lubricator , assembled with two (Y) type coupling kits for panel mounting and one (X) type coupling kit.
Integrated manometer 0-12 bar as standard (for 0-8 and 0-12 bar range) and 0-4 bar (for 0-2 and 0-4 range)

Note

The pressure must be always regulating while increasing. For a more precise regulation and higher sensibility, the use of a regulator with a pressure range as close as possible to the regulated pressure is recommended.

Technical characteristics

Connections	G1”
Max. inlet pressure	13 bar
Working temperature	-5°C +50°C
Weight	4830 (gr)
Pressure range	0-2 bar / 0-4 bar 0-8 bar / 0-12 bar
Filter pore size	5 μm - 20 μm - 50 μm
Bowl capacity	90 cm^3
Indicative oil drop rate	1 drop every 300/600 Nl
Oil type	FD22 - HG32
Bowl capacity	360 cm^3
Assembly positions	Vertical
Min. operational flow rate at 6,3 bar	100 dm^3/min. (ANR)
Wall fixing screw	M8

Ordering code

GN174BⓉⓈⓄⒹⓏ

Ⓣ	TYPE
	VK = Built in gauge
	VT = G1/8" gauge connection
Ⓢ	FILTER PORE SIZE ADJUSTING RANGE
	C = 5 μm / 0-8 bar
	D = 5 μm / 0-12 bar
	G = 20 μm / 0-8 bar
	H = 20 μm / 0-12 bar
	N = 50 μm / 0-8 bar
	P = 50 μm / 0-12 bar
Ⓞ	OPTIONS
	= Standard *
	A = Min.oil level indicator NO
	C = Min.oil level indicator NC
	S = Automatic drain
	SA = Automatic drain + Min.oil level indicator NO
	SC = Automatic drain + Min.oil level indicator NC
Ⓓ	FLOW DIRECTION
	= Standard * (from left to right)
	W = from right to left
Ⓩ	BOWL OPTIONS
	= Standard *
	N = Nylon bowl

* no additional letter required

3

Service unit assembled (VL+EM+PA+L) (VL+E+PA+L) (VL+EW+PA+L)

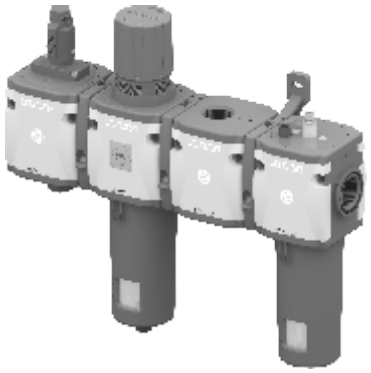

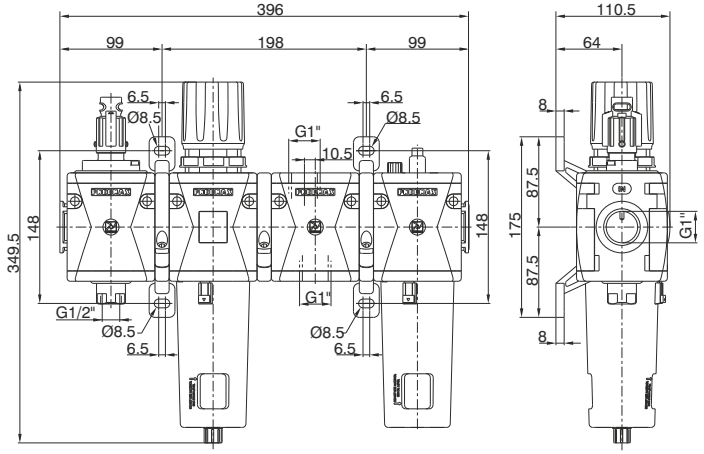

Example : GN174BVNG : size 4 combined group comprising Shut-off valve, Filter-regulator, Air intake and Lubricator, G1" connections 0 to 8 bar adjusting range and 20 μm filter pore size

Operational characteristics

Combined group comprising manual shut-off valve, Filter - regulator with built in manometer, Air intake and Lubricator, assembled with two (Y) type coupling kits for panel mounting and one (X) type coupling kit.
Integrated manometer 0-12 bar as standard (for 0-8 and 0-12 bar range) and 0-4 bar (for 0-2 and 0-4 range)

Note

The pressure must be always regulating while increasing. For a more precise regulation and higher sensibility, the use of a regulator with a pressure range as close as possible to the regulated pressure is recommended.

Technical characteristics

Connections	G1”
Max. inlet pressure	13 bar
Working temperature	-5°C +50°C
Weight	4615 (gr)
Pressure range	0-2 bar / 0-4 bar 0-8 bar / 0-12 bar
Filter pore size	5 μm - 20 μm - 50 μm
Bowl capacity	90 cm^3
Indicative oil drop rate	1 drop every 300/600 Nl
Oil type	FD22 - HG32
Bowl capacity	360 cm^3
Assembly positions	Vertical
Min. operational flow rate at 6,3 bar	100 dm^3/min. (ANR)
Wall fixing screw	M8

Ordering code

GN174BⓉⓈⓄⒹⓏ

Ⓣ	TYPE
	VN = Built in gauge
	VP = G1/8" gauge connection
Ⓢ	FILTER PORE SIZE ADJUSTING RANGE
	C = 5 μm / 0-8 bar
	D = 5 μm / 0-12 bar
	G = 20 μm / 0-8 bar
	H = 20 μm / 0-12 bar
	N = 50 μm / 0-8 bar
	P = 50 μm / 0-12 bar
Ⓞ	OPTIONS
	= Standard *
	A = Min.oil level indicator NO
	C = Min.oil level indicator NC
	S = Automatic drain
	SA = Automatic drain + Min.oil level indicator NO
	SC = Automatic drain + Min.oil level indicator NC
Ⓓ	FLOW DIRECTION
	= Standard * (from left to right)
	W = from right to left
Ⓩ	BOWL OPTIONS
	= Standard *
	N = Nylon bowl

* no additional letter required

Service unit assembled (VL+EM+PP+L) (VL+E+PP+L) (VL+EW+PP+L)

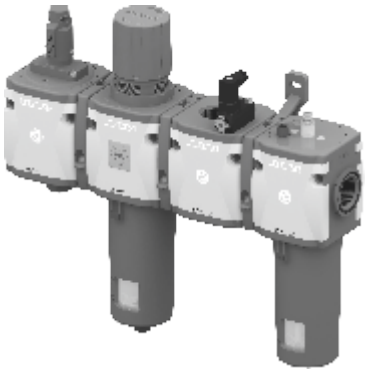

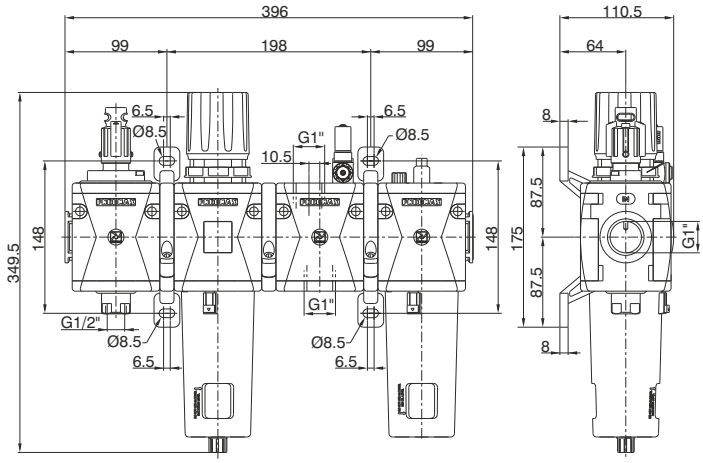

Example : GN174BVRG : size 4 combined group comprising Shut-off valve, Filter-regulator, Pressure switch and Lubricator, G1" connections adjusting range 0 to 8 bar and 20 μm filter pore size

Operational characteristics

Combined group comprising manual shut-off valve, Filter - regulator with built in manometer, Pressure switch and Lubricator, assembled with two (Y) type coupling kits for panel mounting and one (X) type coupling kit.
Integrated manometer 0-12 bar as standard
(for 0-8 and 0-12 bar range) and 0-4 bar (for 0-2 and 0-4 range)

Note

The pressure must be always regulating while increasing. For a more precise regulation and higher sensibility, the use of a regulator with a pressure range as close as possible to the regulated pressure is recommended.

Technical characteristics

Connections	G1"
Max. inlet pressure	13 bar
Working temperature	-5°C +50°C
Weight	4695 (gr)
Pressure range	0-2 bar / 0-4 bar 0-8 bar / 0-12 bar
Filter pore size	5 μm - 20 μm - 50 μm
Bowl capacity	90 cm^3
Indicative oil drop rate	1 drop every 300/600 Nl
Oil type	FD22 - HG32
Bowl capacity	360 cm^3
Assembly positions	Vertical
Min. operational flow rate at 6,3 bar	100 dm^3/min. (ANR)
Wall fixing screw	M8

Ordering code

GN174BⓉⓈⓄⒹⓏ

Ⓣ	TYPE
	VR = Built in gauge
	VC = G1/8" gauge connection
Ⓢ	FILTER PORE SIZE ADJUSTING RANGE
	C = 5 μm / 0-8 bar
	D = 5 μm / 0-12 bar
	G = 20 μm / 0-8 bar
	H = 20 μm / 0-12 bar
	N = 50 μm / 0-8 bar
	P = 50 μm / 0-12 bar
Ⓞ	OPTIONS
	= Standard *
	A = Min.oil level indicator NO
	C = Min.oil level indicator NC
	S = Automatic drain
	SA = Automatic drain + Min.oil level indicator NO
	SC = Automatic drain + Min.oil level indicator NC
Ⓓ	FLOW DIRECTION
	= Standard * (from left to right)
	W = from right to left
Ⓩ	BOWL OPTIONS
	= Standard *
	N = Nylon bowl

* no additional letter required

3

Service unit assembled (VE+AP)

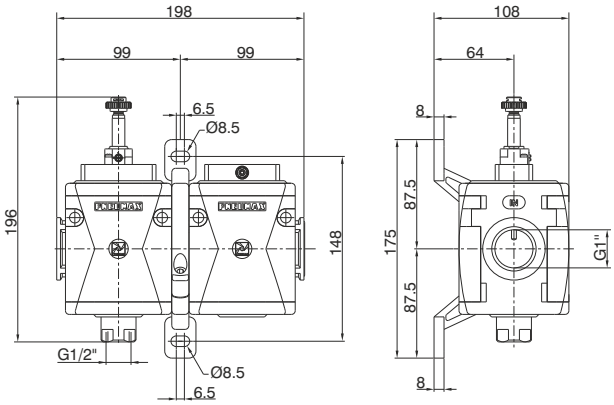

Example : GN174BSB2 : size 4 combined group comprising Electric shut-off valve and Progressive start-up valve without coil with M2 pilot, G1" connections

Operational characteristics

Combined group comprising Electric shut - off valve and Progressive start-up valve assembled with a (Y) type coupling kit for panel mounting.

Technical characteristics

Connections	G1”
Max. inlet pressure	10 bar
Min. inlet pressure	2,5 (bar)
Working temperature	-5°C +50°C
Weight	2390 (gr)
Assembly positions	Indifferent
Wall fixing screw	M8

Ordering code

GN174BSⒶⒹ

Ⓐ	15 mm COIL VOLTAGE
	A4 = 12 V DC
	A5 = 24 V DC
	A6 = 24 V AC (50-60 Hz)
	A7 = 110 V AC (50-60 Hz)
	A8 = 230 V AC (50-60 Hz)
	A9 = 24 V DC (1 Watt)
	22 mm COIL VOLTAGE
	B2 = Without coil M2 mechanic
	B4 = 12 V DC
	B5 = 24 V DC
	B6 = 24 V AC (50-60 Hz)
	B7 = 110 V AC (50-60 Hz)
	B8 = 230 V AC (50-60 Hz)
	B9 = 24 V DC (2 Watt)
	30 mm COIL VOLTAGE
	C5 = 24 V DC
	C6 = 24 V AC (50-60 Hz)
	C7 = 110 V AC (50-60 Hz)
	C8 = 230 V AC (50-60 Hz)
	C9 = 24 V DC (2 Watt)
Ⓓ	FLOW DIRECTION
	= Standard * (from left to right)
	W = from right to left

* no additional letter required

CYLINDERS

Microcylinders according to standard ISO 6432
- special performance microcylinders
- threaded end cover version
- rolled end cover version "MIR"
- rolled end cover version "MIR-INOX"
- technopolymer version “TECNO-MIR”
- stainless steel AISI 316 Steel line series

Cylinders according to standard CNOMO - CETOP - ISO (tie rods cylinders)
- series 1303 - 1308

Cylinders according to standard ISO 15552 (tie rods cylinders)
- series 1315 (Ø250 and Ø320)

Cylinders according to standard ISO 15552
- profile tube cylinders according to standard 1319-1321
- twin rod cylinders series 1325-1326-1345-1347
- non rotating cylinders series 1348-1350
- rotary actuators series 1330-1333
- profile tube cylinders ECOPLUS series 1386 - 1388 / 1396 - 1398
- profile tube cylinders ECOLIGHT series 1390 - 1392
- linear control units, piston rod lock
- stainless steel AISI 316 Steel line series
- profile tube cylinders ECOFLAT series 1370 - 1373

Hydraulic speed control check cylinders

Hydro-pneumatic cylinders

Short stroke compact cylinders

"Europe" compact cylinders

Compact cylinders according to standard ISO 21287 ECOMPACT

Compact cylinders ECOMPACT-S

Rodless cylinders

Cable cylinders

Rodless cylinders Ø16

General

These microcylinders are not subject to a standard; they are single acting with a front spring, can be either hexagonal or round bodied and either completely threaded or threaded with a plain rod ending. They are available with M5 connections or with incorporated quick fittings

Construction characteristics

Body	nickel-plated brass
Rod / piston	stainless steel (C43 chromed)
Rod bushing	brass
Spring	stainless steel
Seal	NBR

Technical characteristics

Fluid	filtered and lubricated air
Pressure	min. 3 bar - max. 7 bar
Temperature	min. -5°C - max. +70°C

"Attention: Dry air must be used for application below 0°C"

Threaded body, round execution

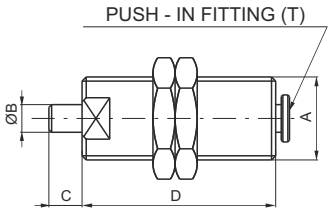

Ordering code	Bore	Stroke	A	B	C	D	T
1213.6.5	6	5	M10x1	3	5	30,5	4/2
1213.6.10	6	10	M10x1	3	5	35,5	4/2
1213.6.20	6	20	M10x1	3	5	49,5	4/2
1213.8.5	8	5	M12x1	3	6	28	4/2
1213.10.3	10	3	M15x1,5	5	1	44	4/2
1213.10.5	10	5	M15x1,5	5	5	40	4/2
1213.10.10	10	10	M15x1,5	5	12	44	4/2

Threaded body, hexagonal execution

Ordering code	Description
1213.Ø.stroke.C	Single acting front spring
1213.Ø.stroke.CF	Single acting front spring threaded body

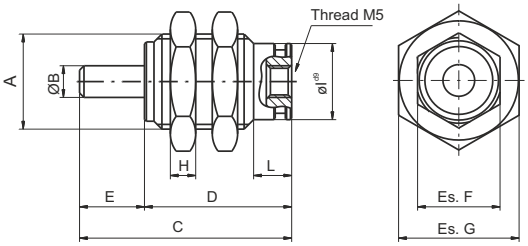

Single acting front spring

Single acting front spring threaded rod

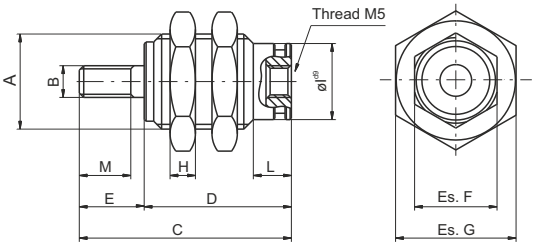

Ø Cil.	Stroke	A	ØB	B	C	D	E	Es. F	Es. G	H	ØI	L	M
6	5	M10x1	Ø3	M3x0.5	27,5	18,5	9	9	12	3	Ø8,5	6	7
6	10	M10x1	Ø3	M3x0.5	34,5	25,5	9	9	12	3	Ø8,5	6	7
6	15	M10x1	Ø3	M3x0.5	41,5	32,5	9	9	12	3	Ø8,5	6	7
10	5	M15x1.5	Ø5	M4x0.7	32,5	20,5	12	13	19	4	Ø12	6	10
10	10	M15x1.5	Ø5	M4x0.7	39	27	12	13	19	4	Ø12	6	10
10	15	M15x1.5	Ø5	M4x0.7	46	34	12	13	19	4	Ø12	6	10
16	5	M22x1.5	Ø6	M5x0.8	37,5	23,5	14	20	27	5	Ø19	7	12
16	10	M22x1.5	Ø6	M5x0.8	43,5	29,5	14	20	27	5	Ø19	7	12
16	15	M22x1.5	Ø6	M5x0.8	50	36	14	20	27	5	Ø19	7	12

Front fixing microcylinders

Ordering code
1273.4.10

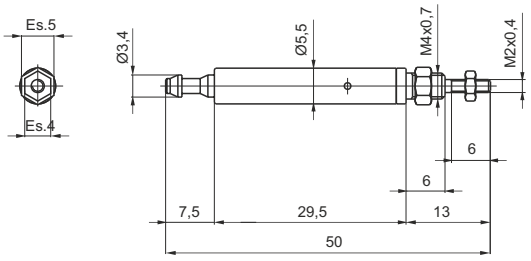

Construction characteristics

End covers	hard anodised aluminum
Barrel	anodised aluminium (brass for Ø8 and Ø10)
Piston rod	non magnetic piston : Ø8 - Ø10: stainless steel / Ø12 - Ø50: C43 chromed magnetic piston: Ø10 - 20: stainless steel / Ø25 - 50: C43 chromed
Piston	aluminium
Seals	Standard: NBR Oil resistant rubber, PUR Piston rod seals (HNBR or FPM seals available upon request)
Mounting	steel painted in cataphoresis
Forks	cadmium plated steel
Single-acting springs	steel for springs and stainless steel
Cushioning length	ø 16 - 20 - 25 - 32 - 40 - 50 mm 15 - 18 - 18 - 18 - 22 - 22

Technical characteristics

Fluid	filtered air, preferably lubricated
Max. pressure	10 bar
Working temperature	-5°C - +70°C with standard seals magnetic or non magnetic piston -5°C - +80°C with FPM seals magnetic piston -5°C - +80°C with HNBR seals magnetic piston -5°C - +120°C with HNBR seals non magnetic piston -5°C - +150°C with FPM seals non magnetic piston

Please follow the suggestions below to ensure a long life for these cylinders:
- use clean and lubricated air
- correct alignment during assembly with regard to the applied load so as to avoid radial components or bending the rod.
- avoid high speeds together with long strokes and heavy loads: this would produce kinetic energy which the cylinder cannot absorb, especially if used as a limit stop (in this case use mechanical stop device)
- evaluate the environmental characteristics of cylinder used (high temperature, hard atmosphere, dust, humidity etc.)

Please note: air must be dried for applications with lower temperature.
Use hydraulic oils H class (ISO Vg32) for correct continued lubrication.
Our Technical Department will be glad to help.

Standard strokes

Ø8 - Ø10 :

15 - 25 - 50 - 75 - 80 - 100 mm

Ø12 - Ø16 :

15 - 25 - 50 - 75 - 80 - 100 - 150 - 160 - 200 - 250 - 300 mm

Ø20 - Ø25 :

15 - 25 - 50 - 75 - 80 - 100 - 150 - 160 - 200 - 250 - 300 - 320 - 350 - 400 mm

Ø32 - Ø50 :

15 - 25 - 50 - 75 - 80 - 100 - 150 - 160 - 200 - 250 - 300 - 320 - 350 - 400 - 450 - 500 mm

Minimum and maximum springs load

Bore	Ø12 - Ø20	Ø25	Ø32	Ø40 - Ø50
Min. load(N)	10	10	20	40
Max. load(N)	25	50	55	110

Basic version

Ordering code	Description
1260.Ø.stroke	Basic version
1271.Ø.stroke	Basic version front spring from Ø12 (max stroke 40 mm)
1272.Ø.stroke	Basic version rear spring from Ø12 (max stroke 40 mm)
12– –.Ø.stroke.A	Adjustable cushioning (from Ø16)
12– –.Ø.stroke.M	Magnetic piston (from Ø10)
12– –.Ø.stroke.X	Stainless steel rod
12– –.Ø.stroke.A.M	Cushioning with magnetic piston
12– –.Ø.stroke.A.M.X	Cushioning, magnetic piston and stainless steel piston rod
12– –.Ø.stroke. . . .T	HNBR seals version
12– –.Ø.stroke. . . .V	FPM seals version

Standard execution, fully complying with ISO standards from ø 8 to ø 25. BOREs 32, 40 and 50 not included in the standard, comply with our own specifications. Can use all available mountings. For single acting type, the maximum stroke is 40 mm., after which overall dimensions increase in length to an extent not proportional to the stroke (and in any case not longer than stroke 100).

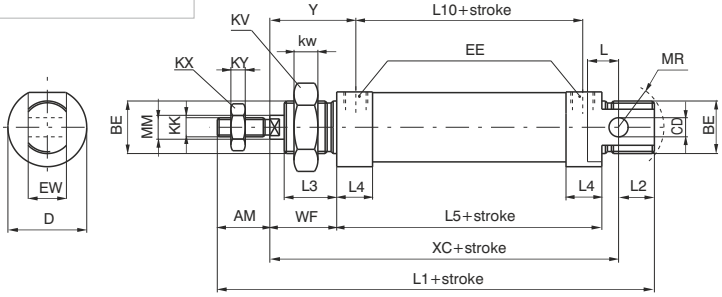

Without rear eye version

Ordering code	Description
1261.Ø.stroke	Without rear eye
1273.Ø.stroke	Without rear eye front spring from Ø12 (max stroke 40 mm)
1274.Ø.stroke	Without rear eye rear spring from Ø12 (max stroke 40 mm)
12– –.Ø.stroke.A	Adjustable cushioning (from Ø16)
12– –.Ø.stroke.M	Magnetic piston (from Ø10)
12– –.Ø.stroke.X	Stainless steel rod
12– –.Ø.stroke.A.M	Cushioning with magnetic piston
12– –.Ø.stroke.A.M.X	Cushioning, magnetic piston and stainless steel piston rod
12– –.Ø.stroke. . . .T	HNBR seals version
12– –.Ø.stroke. . . .V	FPM seals
12– –.Ø.stroke. . . .L	Air inlet at 90° version

Version derived from standard execution 1260 and not included in ISO standard. Not having a rear eye it is shorter and the air inlet is from the rear or at 90° like it is on the front. The considerations made for the basic type 1260 apply for all single-acting types.

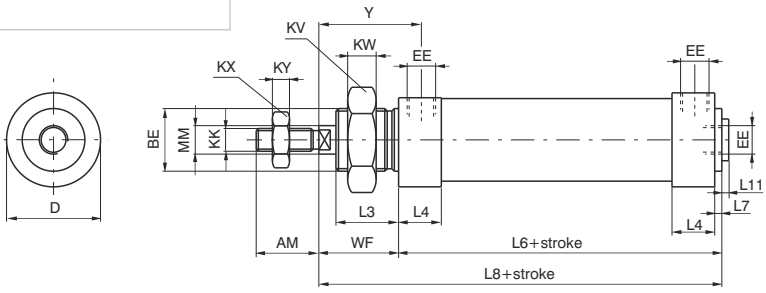

Push/Pull rod version

Ordering code	Description
1262.Ø.stroke	Push/pull rod
1262.Ø.stroke.A	Adjustable cushioning (from Ø16)
1262.Ø.stroke.M	Magnetic piston (from Ø10)
1262.Ø.stroke.X	Stainless steel rod
1262.Ø.stroke.E	Hexagonal piston rod (from Ø12)
1262.Ø.stroke.A.M	Cushioning with magnetic piston
1262.Ø.stroke.A.M.X	Cushioning, magnetic piston and stainless steel piston rod
1262.Ø.stroke. . . .T	HNBR seals version ★
1262.Ø.stroke. . . .V	FPM seals version ★

★ Excludes hexagonal rod version

Execution by rod coming out from both end plates, with overall dimensions. except for the rod, equal to 1260 version. Not available with Ø8 and 10).

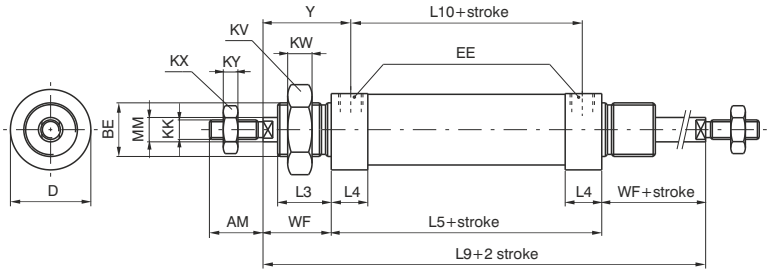

Non rotating piston rod version

Ordering code	Description
1260.Ø.stroke.E	Hexagonal piston rod (from Ø12)
1271.Ø.stroke.E	Hexagonal piston rod with front spring from Ø12 (max stroke 40 mm.)
1272.Ø.stroke.E	Hexagonal piston rod with rear spring from Ø12 (max stroke 40 mm.)
12– –.Ø.stroke.E.M	Hexagonal piston rod with magnetic piston (from Ø12)
12– –.Ø.stroke.E.X	Hexagonal stainless steel piston rod

Similar overall dimensions as 1260 basic type, it differs because of the hexagonal rod (instead of circular) to avoid the rotation. It is particularly suitable when it is used as a guide and support to the linked element. Not for use with high frequencies and long strokes. For which, whenever possible use front spring.

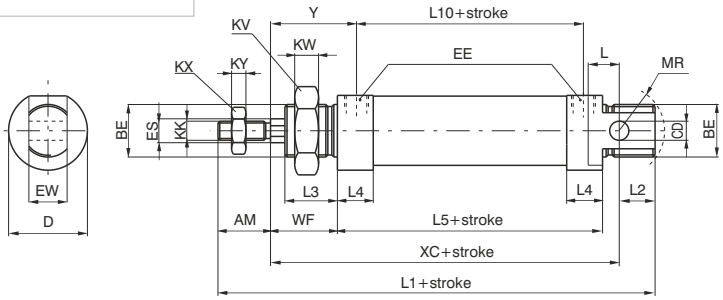

Table of dimensions

Bore		8	10	12	16	20	25	32	40	50
AM (-0,2)		12	12	16	16	20	22	20	25	25
BE		M12x1,25	M12x1,25	M16x1,5	M16x1,5	M22x1,5	M22x1,5	M30x1,5	M40x1,5	M40x1,5
CD (H9)		4	4	6	4	8	8	12	14	14
D (-0,3)		16	17	19	24	28	33	40	48	58
EE		M5	M5	M5	M5	G1/8"	G1/8"	G1/8"	G1/4"	G1/4"
ES		-	-	6	6	8	10	12	12	12
EW (d13)		8	8	12	12	16	16	26	30	30
KK (6g)		M4x0,7	M4x0,7	M6x1	M6x1	M8x1,25	M10x1,25	M10x1,25	M12x1,75	M12x1,75
KV		17	17	22	22	30	30	42	52	52
KW		5,5	5,5	6	6	7	7	8	9	9
KX		7	7	10	10	13	17	17	19	19
KY		3	3	4	4	5	6	6	7	7
L		6	6	9	9	12	13	13	16	16
L1(±1)	*	85	85	105	111	130	141	139	164	167
L2		9	9	14	13	15	15	14	16	16
L3		11	11	17	17	18	22	22	25	25
L4		10	10	9,5	10,5	15	15	15	18	18
L5 (±1)	*	46	46	50	56	68	69	69	79	82
L6 (±1)	*	48	48	52	58	70,5	71,5	71,5	82	85
L7		2	2	2	2	2,5	2,5	2,5	3	3
L8 (±1)	*	64	64	74	80	94,5	99,5	99,5	117	120
L9 (±1,2)	*	78	78	94	100	116	125	125	149	152
L10 (±1)	*	35	35	40	45	52	53	53	60	63
L11		-	-	-	1,5	2	2	2	2	2
MM (f7)		4	4	6	6	8	10	12	14	14
MR (min.)		12	12	16	16	18	19	22	28	28
WF (±1,2)		16	16	22	22	24	28	28	35	35
XC (±1)	*	64	64	75	82	95	104	105	123	126
Y (±1,2)		21,5	21,5	27	27,5	32	36	36	44,5	44,5
STROKE TOLERANCE: until stroke 100 mm - 1,5, beyond + 2 mm.										
Weight	stroke 0	55	60	80	100	175	240	365	610	790
gr.	every 10mm	6	7	5	5	8	11	15	19	21

Without rear eye version

Weight	stroke 0	50	55	75	95	170	230	345	570	750
gr.	every 10mm	6	7	5	5	8	11	15	19	21

Push/pull rod version

Weight	stroke 0	55	60	95	120	220	310	450	760	950
gr.	every 10mm	7	8	7	7	12	17	24	31	33

Hexagonal rod version

Weight	stroke 0	-	-	85	105	180	250	370	590	760
gr.	every 10mm	-	-	5	6	8	12	16	17	19

(*) These dimensions increase of 10 mm for microcylinders equipped with magnetic piston and spring return, and of 9 mm for microcylinders with 10 mm BORE magnetic piston

Construction characteristics

End covers	hard anodised aluminium
Barrel	stainless steel AISI 304
Piston rod	stainless steel
Piston	brass (ø8-10-12) aluminium (ø16-20-25)
Seals	Standard: NBR Oil resistant rubber, PUR Piston rod seals (HNBR or FPM seals available upon request)
Mounting	steel painted in cataphoresis
Forks	zinc plated steel
Single-acting springs	C98 zinc plated steel for springs
Cushioning length	ø 16 - 20 - 25 - 32 mm 15 - 18 - 18 - 18

Technical characteristics

Fluid	filtered air and preferably lubricated
Maximum working pressure	10 bar
Working temperature	-5°C - +70°C with standard seals magnetic or non magnetic piston
	-5°C - +80°C with FPM seals magnetic piston
	-5°C - +80°C with HNBR seals magnetic piston
	-5°C - +120°C with HNBR seals non magnetic piston
	-5°C - +150°C with FPM seals non magnetic piston

Please follow the suggestions below to ensure a long life for these cylinders:
- use clean and lubricated air
- correct alignment during assembly with regard to the applied load so as to avoid radial components or bending the rod.
- avoid high speeds together with long strokes and heavy loads: this would produce kinetic energy which the cylinder cannot absorb, especially if used as a limit stop (in this case use mechanical stop device)
- evaluate the environmental characteristics of cylinder used (high temperature, hard atmosphere, dust, humidity etc.)

Please note: air must be dried for applications with lower temperature.
Use hydraulic oils H class (ISO Vg32) for correct continued lubrication.
Our Technical Department will be glad to help.

Standard strokes

ø 8 and ø 10
15 - 25 - 50 - 75 - 80 - 100 mm

ø 12 and ø 16
15 - 25 - 50 - 75 - 80 - 100 - 150 - 160 - 200 - 250 - 300 mm

ø 20 and ø 25
15 - 25 - 50 - 75 - 80 - 100 - 150 - 160 - 200 - 250 - 300 - 320 - 350 - 400 mm

ø 32
15 - 25 - 50 - 75 - 80 - 100 - 150 - 160 - 200 - 250 - 300 - 320 - 350 - 400 - 450 - 500 mm

Minimum and maximum springs load

Bore	Ø8	Ø10	Ø12	Ø16	Ø20	Ø25	Ø32
Min. load(N)	2.2	2.2	4	7.5	11	16.5	23
Max. load(N)	4.2	4.2	8.7	21	22	30.7	52.5

Basic version

Ordering code	Description
1280.Ø.stroke	Basic version
1291.Ø.stroke	Basic version front spring (max stroke 50 mm)
1292.Ø.stroke	Basic version rear spring from Ø16 (max stroke 50 mm)
12– –.Ø.stroke.A	Adjustable cushioning (from Ø16)
12– –.Ø.stroke.M	Magnetic piston
12– –.Ø.stroke.A.M	Cushioning with magnetic piston (from Ø16)
12– –.Ø.stroke. . . .T	HNBR seals version
12– –.Ø.stroke. . . .V	FPM seals version

Standard version, fully compliant with ISO standards. Can use all available mountings. For single acting type, the maximum stroke is 50 mm., after which overall dimensions increase in length to an extent not proportional to the stroke (and in any case not longer than stroke 100).

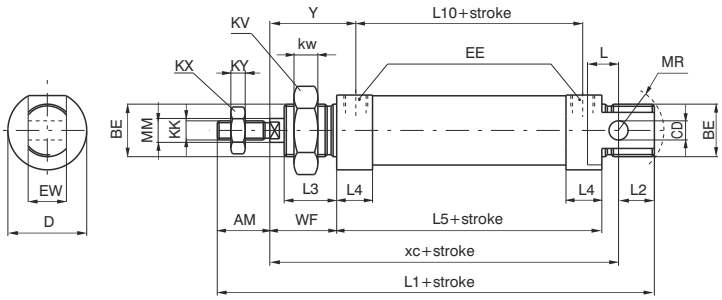

Without rear eye version

Ordering code	Description
1281.Ø.stroke	Without rear eye
1293.Ø.stroke	Without rear eye front spring (max stroke 50 mm)
1294.Ø.stroke	Without rear eye rear spring from Ø16 (max stroke 50 mm)
12– –.Ø.stroke.A	Adjustable cushioning (from Ø16)
12– –.Ø.stroke.M	Magnetic piston
12– –.Ø.stroke.A.M	Cushioning with magnetic piston (from Ø16)
12– –.Ø.stroke. . . .T	HNBR seals version
12– –.Ø.stroke. . . .V	FPM seals version

Version derived from standard version 1260 and not included in ISO standard. Not having a rear eye it is shorter. Rear inlet connection is at 90 like the front one, in line and plugged. The considerations made for the basic type 1280 apply for all single-acting types.

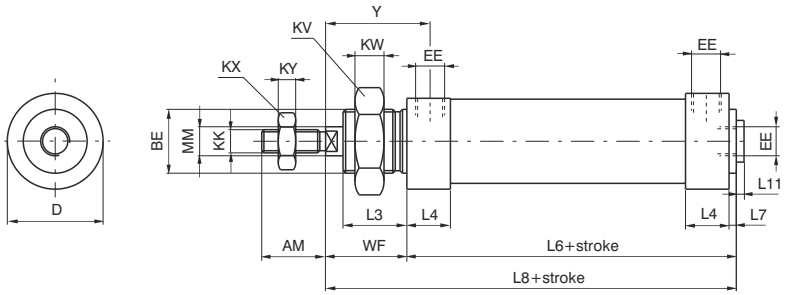

Push/Pull rod version

Ordering code	Description
1282.Ø.stroke	Push/pull rod version
1282.Ø.stroke.M	Magnetic piston
1282.Ø.stroke.A	Adjustable cushioning (from Ø16)
1282.Ø.stroke.A.M	Cushioning with magnetic piston (from Ø16)
1282.Ø.stroke. . . .T	HNBR seals version
1282.Ø.stroke. . . .V	FPM seals version

This version having rods coming out from both end plates with overall dimensions, except for the rod, equal to 1280 version. This version is not suitable for Ø8 and Ø10 due to difficulty in anchoring the pistons to rods.

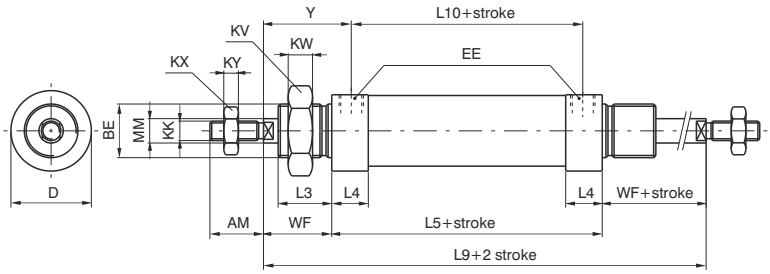

4

Table of dimensions

		Bore						
		8	**10**	**12**	**16**	**20**	**25**	**32**
AM (-0,2)		12	12	16	16	20	22	20
BE		M12X1,25	M12X1,25	M16X1,5	M16X1,5	M22X1,5	M22X1,5	M30X1,5
CD (H9)		4	4	6	6	8	8	12
D (h11)		16	16	20	21	27	30	38
EE		M5	M5	M5	M5	G1/8"	G1/8"	G1/8"
EW (d13)		8	8	12	12	16	16	26
KK (6g)		M4X0,7	M4X0,7	M6X1	M6X1	M8X1,25	M10X1,25	M10X1,25
KV		17	17	22	22	30	30	42
KW		5,5	5,5	6	6	7	7	8
KX		7	7	10	10	13	17	17
KY		3	3	4	4	5	6	6
L		6	6	9	9	12	13	13
L1 (±1)	*	86	86	105	111	130	141	139
L2		10	10	14	13	15	15	14
L3		12	12	17	17	18	22	22
L4		9	9	9	11	15,5	15	14,5
L5 (±1)	*	46	46	50	56	68	69	69
L6	*	48	48	52	58	70,5	71,5	71,5
L7		2	2	2	2	2,5	2,5	2,5
L8	*	64	64	74	80	94,5	99,5	99,5
L9 (±1,2)	*	78	78	94	100	116	125	125
L10 (±1)	*	37	37	41	45	52,5	53	54,5
L11		1,5	1,5	1,5	1,5	2	2	2
MM (f7)		4	4	6	6	8	10	12
MR		12	12	16	16	18	19	22
WF (±1,2)		16	16	22	22	24	28	28
XC (±1)	*	64	64	75	82	95	104	105
Y (±1,2)		20,5	20,5	26,5	27,5	32	36	35
Stroke tolerance: until stroke 100 +1,5 mm, beyond +2 mm								
Weight	stroke 0	30	35	65	80	160	200	310
gr.	every 10mm	2	2,5	4	5	7,5	11,5	18
Variations of the versions: *without rear eye version*								
Weight	stroke 0	25	30	60	75	150	185	290
gr.	every 10mm	2	2,5	4	5	7,5	11,5	18
Push/pull rod version								
Weight	stroke 0	35	40	75	95	200	250	370
gr.	every 10mm	2,5	3	6	7	10,5	15,5	24

Dimensions marked with * do not increase proportionally to stroke for rear spring version (over 25 mm stroke).

Construction characteristics

End covers	stainless steel AISI 316
Barrel	stainless steel AISI 304
Piston rod	stainless steel
Piston	aluminium
Piston seals	Standard: NBR Oil resistant rubber, PUR Piston rod seals (FPM seals available upon request)
Mounting	stainless steel AISI 304
Forks	stainless steel AISI 304

Technical characteristics

Fluid	filtered air and preferably lubricated
Maximum working pressure	10 bar
Working temperature	-5°C - +70°C with standard seals magnetic or non magnetic piston -5°C - +80°C with FPM seals magnetic piston -5°C - +150°C with FPM seals non magnetic piston

Please follow the suggestions below to ensure a long life for these cylinders:
- use clean and lubricated air
- correct alignment during assembly with regard to the applied load so as to avoid radial components or bending the rod.
- avoid high speeds together with long strokes and heavy loads: this would produce kinetic energy which the cylinder cannot absorb, especially if used as a limit stop (in this case use mechanical stop device)
- evaluate the environmental characteristics of cylinder used (high temperature, hard atmosphere, dust, humidity etc.)

Please note: air must be dried for applications with lower temperature.
Use hydraulic oils H class (ISO Vg32) for correct continued lubrication.
Our Technical Department will be glad to help.

Standard strokes

ø 16
15 - 25 - 50 - 75 - 80 - 100 - 150 - 160 - 200 - 250 - 300 mm

ø 20 and ø 25
15 - 25 - 50 - 75 - 80 - 100 - 150 - 160 - 200 - 250 - 300 - 320 - 350 - 400 mm

ø 32
15 - 25 - 50 - 75 - 80 - 100 - 150 - 160 - 200 - 250 - 300 - 320 - 350 - 400 - 450 - 500 mm

Basic version

Ordering code	Description
1280.Ø.stroke.X	Inox non-magnetic version, NBR seals
1280.Ø.stroke.XV	Inox non-magnetic, FPM seals
1280.Ø.stroke.AX	Inox non-magnetic version with cushions*, NBR seals
1280.Ø.stroke.AXV	Inox non-magnetic version with cushions*, FPM seals
1280.Ø.stroke.MX	Inox magnetic version, NBR seals
1280.Ø.stroke.MXV	Inox magnetic version, FPM seals
1280.Ø.stroke.AMX	Inox magnetic version with cushions*, NBR seals
1280.Ø.stroke.AMXV	Inox magnetic version with cushions*, FPM seals

* no adjustable cushioning

Standard version, fully complying with ISO standards.

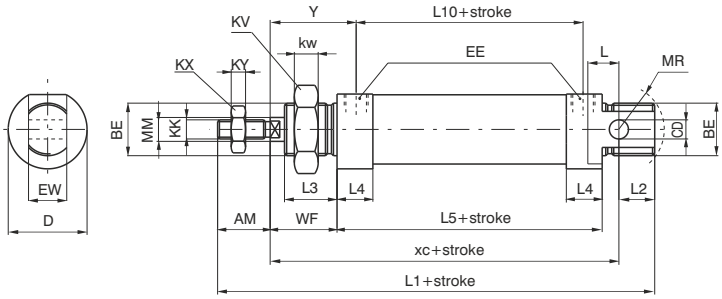

Push/pull rod version

Ordering code	Description
1282.Ø.stroke.X	Inox non-magnetic version, NBR seals
1282.Ø.stroke.XV	Inox non-magnetic, FPM seals
1282.Ø.stroke.AX	Inox non-magnetic version with cushions*, NBR seals
1282.Ø.stroke.AXV	Inox non-magnetic version with cushions*, FPM seals
1282.Ø.stroke.MX	Inox magnetic version, NBR seals
1282.Ø.stroke.MXV	Inox magnetic version, FPM seals
1282.Ø.stroke.AMX	Inox magnetic version with cushions*, NBR seals
1282.Ø.stroke.AMXV	Inox magnetic version with cushions*, FPM seals

* no adjustable cushioning

This version having rods coming out from both end plates, with overall dimensions, except for the rod, equal to 1280 version.

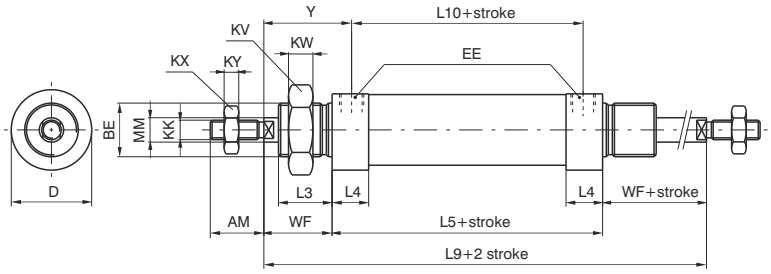

Table of dimensions

Bore	AM	BE	CD	D	EE	EW	KK	KV	KW	KX	KY	L	L1	L2	L3	L4	L5	L9	L10	MM	MR	WF	XC	Y
16	16	M16X1,5	6	21	M5	12	M6X1	22	6	10	4	9	111	13	17	10,5	56	100	45	6	16	22	82	27,5
20	20	M22X1,5	8	27	G1/8"	16	M8X1,25	30	7	13	5	12	130	15	18	10,5	68	116	52,5	8	18	24	95	32
25	22	M22X1,5	8	30	G1/8"	16	M10X1,25	30	7	17	6	13	140	15	22	15,5	68	125	52,5	10	18	28	104	36
32	20	M30X1,5	12	38	G1/8"	26	M10X1,25	42	8	17	6	13	139	14	22	14,5	69	125	54,5	12	22	28	105	35

	Standard weight (gr.)		Weight push-pull version (gr)	
Bore	**Stroke 0**	**every 10 mm**	**Stroke 0**	**every 10 mm**
16	145	5	180	7
20	280	8	330	11
25	370	12	440	16
32	580	18	660	24

Construction characteristic

End covers	nylon 66 reinforced with glass fibres
Barrel	nylon 66 reinforced with glass fibres
Piston rod	C43 Chromed (non magnetic piston version) stainless steel (magnetic piston version)
Piston	aluminium
Seal	NBR oil-resistant rubber seal
Piston rod seal	PUR
Mounting	steel painted / stainless steel AISI 304
Forks	zinc plated steel / stainless steel AISI 304

Technical characteristics

Fluid	filtered air and preferably lubricated
Maximum working pressure	8 bar
Working temperature	-5°C - +50°C

Please follow the suggestions below to ensure a long life for these cylinders:
- use clean and lubricated air
- correct alignment during assembly with regard to the applied load so as to avoid radial components or bending the rod.
- avoid high speeds together with long strokes and heavy loads: this would produce kinetic energy which the cylinder cannot absorb, especially if used as a limit stop (in this case use mechanical stop device)
- evaluate the environmental characteristics of cylinder used (high temperature, hard atmosphere, dust, humidity etc.)

Please note: air must be dried for applications with lower temperature.
Use hydraulic oils H class (ISO Vg32) for correct continued lubrication.
Our Technical Department will be glad to help.

Standard strokes

ø 12
15 - 25 - 50 - 75 - 80 - 100 - 125 - 150 - 160 - 200 mm
ø 16
15 - 25 - 50 - 75 - 80 - 100 - 125 - 150 - 160 - 200 - 250 mm
ø 20 - ø 25
15 - 25 - 50 - 75 - 80 - 100 - 125 - 150 - 160 - 200 - 250 - 300 mm

Maximum tightening torque for fittings

Bore	Thread	Maximum torque (Nm)
Ø 12	M5	1
Ø 16	M5	1
Ø 20	G 1/8”	4
Ø 25	G 1/8”	4

WEIGHT TABLE SERIES TECNO MIR 1230 - 1231

	Bore	Ø12	Ø16	Ø20	Ø25
WEIGHT gr.	stroke 0	50 gr.	65 gr.	120 gr.	160 gr.
	every 10mm	3,75 gr.	4 gr.	6,5 gr.	9 gr.

WEIGHT TABLE SERIES TECNO MIR 1232

	Bore	Ø12	Ø16	Ø20	Ø25
WEIGHT gr.	stroke 0	60 gr.	75 gr.	180 gr.	200 gr.
	every 10mm	7 gr.	8,5 gr.	10 gr.	20 gr.

Basic version

Ordering code	Description
1230.Ø.stroke	Basic version
1230.Ø.stroke.M	Basic version magnetic piston

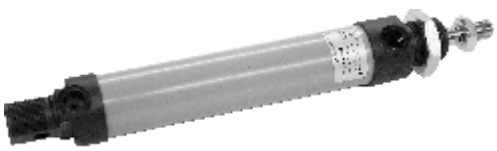

Standard version, fully complying with ISO standards. Can use all available mountings.

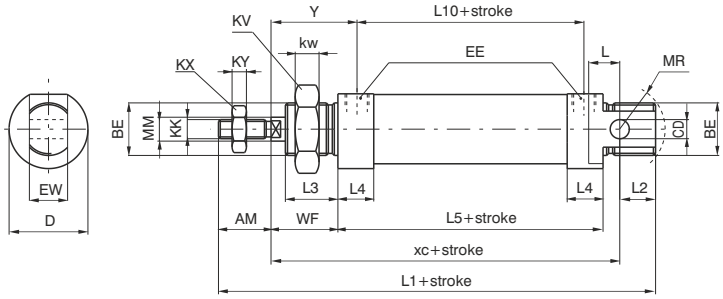

Without rear eye version

Ordering code	Description
1231.Ø.stroke	Without rear eye version
1231.Ø.stroke.M	Without rear eye version magnetic piston

This version derived from standard version 1230 and not included in ISO standard.
Not having a rear eye it is shorter. The inlet connection is lateral on the rear cover (like on the front cover).

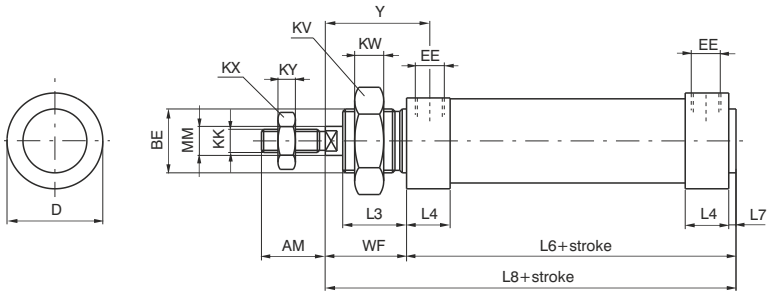

Push/Pull rod version

Ordering code	Description
1232.Ø.stroke	Push/Pull rod version
1232.Ø.stroke.M	Push/Pull rod version magnetic piston

Through rod model, dimensions as for the 1230 (except the rod).

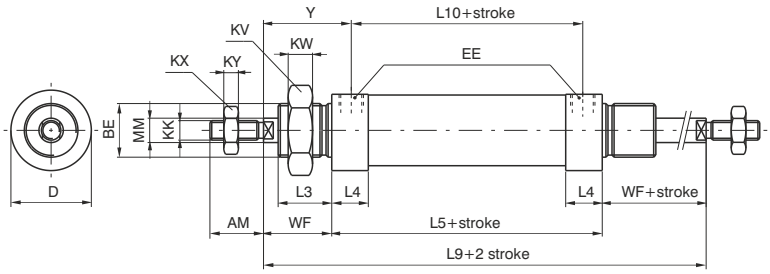

Table of dimensions

Bore	AM (-0,2)	BE	CD (H9)	D (h11)	EE	EW (d13)	KK (6g)	KV	KW	KX	KY	L	L1 (±1)	L2	L3	L4	L5 (±1)	L6	L7	L8	L9 (±1,2)	L10 (±1)	MM (f7)	WF (±1,2)	XC (±1)	Y (±1)
12	16	M16X1,5	6	19	M5	12	M6X1	22	6	10	4	9	105	14	17	13,5	50	52	2	74	94	41	6	22	75	26,5
16	16	M16X1,5	6	23	M5	12	M6X1	22	6	10	4	9	111	13	17	14,5	56	58	2	80	100	45	6	22	82	27,5
20	20	M22X1,5	8	28,5	G1/8"	16	M8X1,25	30	7	13	5	12	130	15	18	20,5	68	70,5	2,5	94,5	116	52	8	24	95	32
25	22	M22X1,5	8	31,5	G1/8"	16	M10X1,25	30	7	17	6	14	140	14	22	20	68	70,5	2,5	98,5	124	52	10	28	104	36

Sensor clamps for microcylinders with threaded end covers and Technopolymer

Sensor clamps - codes 1500._, RS._, HS._	Sensor clamps - codes 1580._, MRS._, MHS._
Ordering code	Ordering code
1260.Ø.F	**1260.Ø.FS**

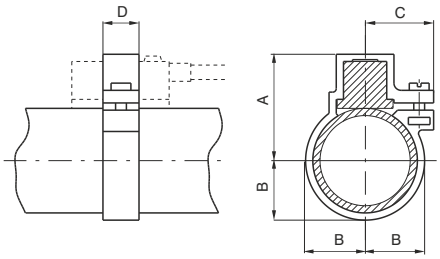

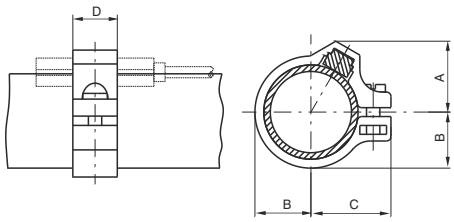

Table of dimensions

Bore	Ø10	Ø12	Ø16	Ø20	Ø25	Ø32	Ø40	Ø50
A	23	23	25	27	29,5	33	37	42
B	10	10	12	14	16,5	20	24	29
C	15	15	16,5	17,5	19	20	22	24
D	10	10	10	10	10	10	10	10
Weight (gr)	2	2	3	5	7	10	14	16

Table of dimensions

Bore	Ø10	Ø12	Ø16	Ø20	Ø25	Ø32	Ø40	Ø50
A	13	14	15,4	17,2	19,3	20,5	22	29
B	9	10	12	14	16,5	20	24	29
C	16	16	18	19,5	22	26	30	35
D	10	10	10	10	10	10	10	10
Weight (gr)	2	2	3	5	7	8	10	11

Sensor clamps for microcylinders with rolled end covers "MIR" and "MIR-INOX"

Sensor clamps - codes 1500._, RS._, HS._	Sensor clamps - codes 1580._, MRS._, MHS._
Ordering code	Ordering code
1280.Ø.F - cylinders MIR **1280.Ø.FX - cylinders MIR-INOX**	**1280.Ø.FS - cylinders MIR** **1280.Ø.FSX - cylinders MIR-INOX**

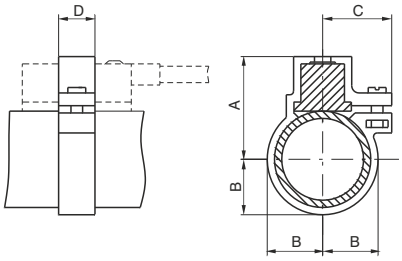

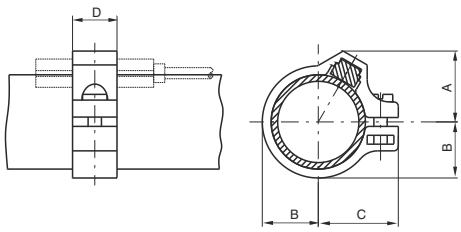

Table of dimensions

Bore	Ø16	Ø20	Ø25	Ø32
A	24	25,5	28,5	31,8
B	10,5	12,5	15,5	18,8
C	16,5	17,5	19	20
D	10	10	10	10
Weight (gr)	3	5	7	10

Table of dimensions

Bore	Ø8	Ø10	Ø12	Ø16	Ø20	Ø25	Ø32
A	11	12	13	14,5	16	17,5	19,5
B	6,5	7,5	8,5	10,5	12,5	15,3	18,8
C	12,5	13,5	15	16	18	20,5	24
D	10	10	10	10	10	10	10
Weight (gr)	2	2	2	3	5	7	10

Sensor for microcylinders

For technical characteristics and ordering codes see Chapter 6 (magnetic sensors)

Foot

Ordering code

1200.Ø.01
(1 piece)

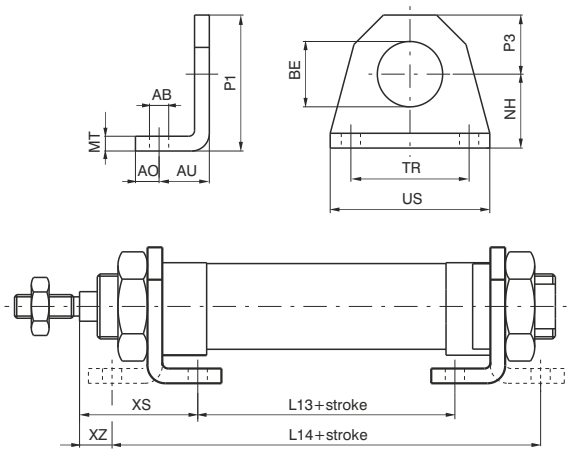

Used to mount the cylinder on the mounting plane with the rod parallel to said plane. Use one for short strokes and two for long strokes. It is made of stamped steel, made corrosion resistant by cataphoreses treatment. Attached to the end plates by means of nuts (or lock nuts) 05.

Attention: the dimensions of microcylinders with threaded end covers (*) increase of 10 mm. for microcylinders equipped with magnetic piston and spring return, and of 9 mm. for microcylinders with 10 mm. BORE magnetic piston.

Bore	8	10	12	16	20	25	32	40	50
AB (H13)	4,5	4,5	5,5	5,5	6,5	6,5	6,5	8,5	8,5
AO	5	5	6	6	8	8	8	10	10
AU	11	11	14	14	17	17	17	20	20
BE	12	12	16	16	22	22	30	40	40
L13 (±1) *	30	30	30	36	44	45	45	49	52
L14 (±1) *	68	68	78	84	102	103	103	119	122
MT	3	3	4	4	5	5	5	5	5
NH (±0,3)	16	16	20	20	25	25	28	40	40
P1	26	26	33	33	45	45	50	70	70
P3	10	10	13	13	20	20	22	30	30
TR (JS14)	25	25	32	32	40	40	52	70	70
US	35	35	42	42	54	54	66	90	90
XS (±1,4)	24	24	32	32	36	40	40	50	50
XZ (±1,4)	5	5	8	8	7	11	11	15	15
Weight gr.	22	22	45	45	90	90	110	210	210

Flange

Ordering code

1200.Ø.02
(1 piece)

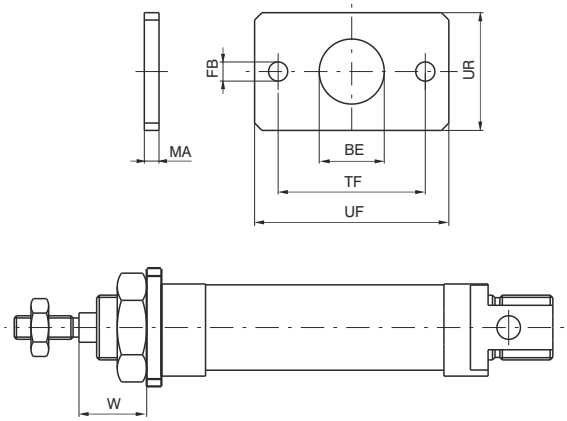

Used to mount the microcylinder at a right angle to the mounting plane. Attached to the front (or rear) endcap by a nut (or lock nut) 05. Made of extruded steel, made corrosion resistant by cataphoresis.

Bore	8	10	12	16	20	25	32	40	50
BE	12	12	16	16	22	22	30	40	40
FB (H13)	4,5	4,5	5,5	5,5	6,5	6,5	6,5	8,5	8,5
UF	40	40	53	53	66	66	68	90	90
UR	25	25	30	30	40	40	50	60	60
MA	3	3	4	4	5	5	5	5	5
TF (JS14)	30	30	40	40	50	50	52	70	70
W (±1,4)	13	13	18	18	19	23	23	30	30
Weight gr.	20	20	40	40	85	85	100	150	150

Rear eye

Ordering code

1200.Ø.03
(1 piece)

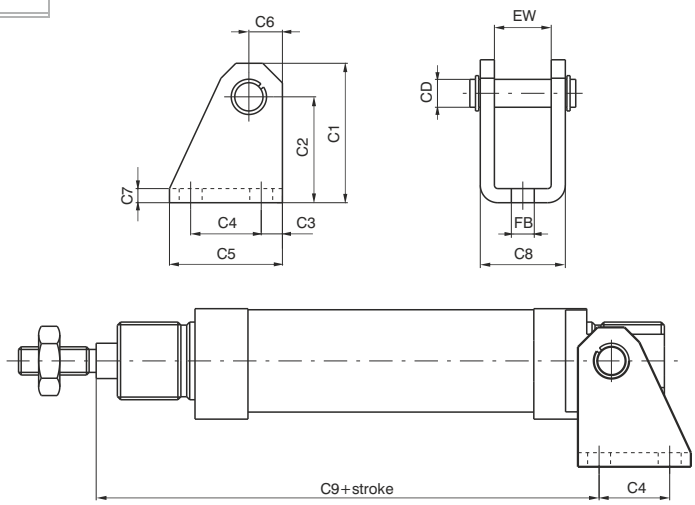

Use with the rear end cover to mount the cylinder either parallel or at a right-angle to the mounting plane. This allows the cylinder to oscillate and self-align with the linked element to the rod. This is necessary when the rod may be subject to lateral during travel.

Attention: the dimensions of microcylinders with threaded end covers (*) increase by 10mm for equipped with magnetic piston and spring return, and by 9mm for microcylinders with 10mm BORE magnetic piston.

Bore	8	10	12	16	20	25	32	40	50
CD	4	4	6	6	8	8	12	14	14
C1	28,5	28,5	33,5	33,5	39,5	39,5	44,5	53,5	53,5
C2 (±0,3)	24	24	27	27	30	30	33	40	40
C3	3,5	3,5	5	5	6	6	7	10	10
C4	12,5	12,5	15	15	20	20	24	28	28
C5	20	20	25	25	32	32	38	45	45
C6	4,5	4,5	6,5	6,5	9,5	9,5	11,5	13,5	13,5
C7	2,5	2,5	3	3	4	4	4	4	4
C8	13	13	18	18	24	24	34	38	38
C9 (±0,4) *	63	63	73,5	80,5	91,5	100,5	100,5	119,5	122,5
EW	8,1	8,1	12,1	12,1	16,1	16,1	26,1	30,1	30,1
FB (H13)	4,5	4,5	5,5	5,5	6,5	6,5	6,5	8,5	8,5
Weight gr.	20	20	35	35	75	75	135	180	180

Cylinder rod forks / Nut or lock nut for the endcaps

Ordering code

1200.Ø.04 *
(with pin)

1200.Ø.04/1
(with clips)

*Available from bore Ø12

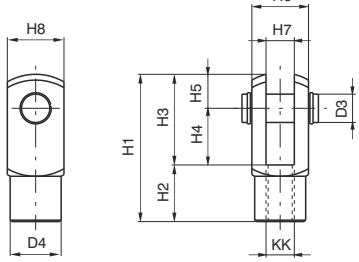

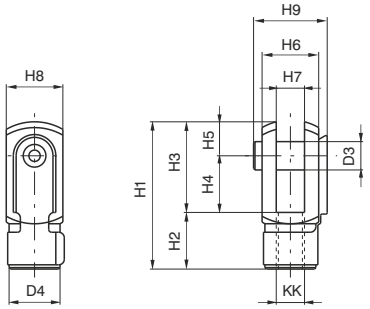

Ordering code

1200.Ø.05

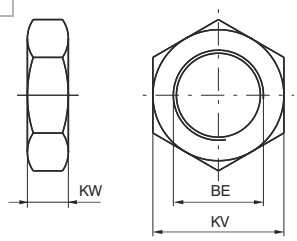

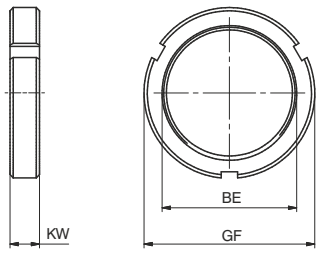

Forks:
Similar to hinge 03, mounted on the rod thread, assures a regular operation even in the presence of significant forces to the linked element. Made of zinc plated steel.
Nut:
Used to fasten flanges or feet to the endcaps of the microcylinder. The nuts are mounted on BOREs that go from 8 to 25, the lock nuts on 32, 40 and 50. Both are supplied (one piece) with the microcylinders.

Bore	D3	D4	H1	H2	H3	H4	H5	H6	H7 (B12)	H8	H9	KK	BE	KV	GF	KW	Forks weight gr.	Nut weight gr.
8	4	8	21	8	13	8	5	8	4	10	11	M4x0,7	M12x1,25	17	-	5,5	12	7
10	4	8	21	8	13	8	5	8	4	10	11	M4x0,7	M12x1,25	17	-	5,5	12	7
12	6	10	31	12	19	12	7	12	6	12	18	M6x1	M16x1,5	22	-	6	20	16
16	6	10	31	12	19	12	7	12	6	12	18	M6x1	M16x1,5	22	-	6	20	16
20	8	14	42	16	26	16	10	16	8	16	23	M8x1,25	M22x1,5	30	-	7	45	25
25	10	18	52	20	32	20	12	20	10	20	27	M10x1,25	M22x1,5	30	-	7	90	25
32	10	18	52	20	32	20	12	20	10	20	27	M10x1,25	M30x1,5	-	42	8	90	42
40	12	20	62	24	38	24	14	24	12	24	32	M12x1,75	M40x1,5	-	52	9	145	60
50	12	20	62	24	38	24	14	24	12	24	32	M12x1,75	M40x1,5	-	52	9	145	60

Foot

Ordering code
1200.Ø.01X (1 piece)

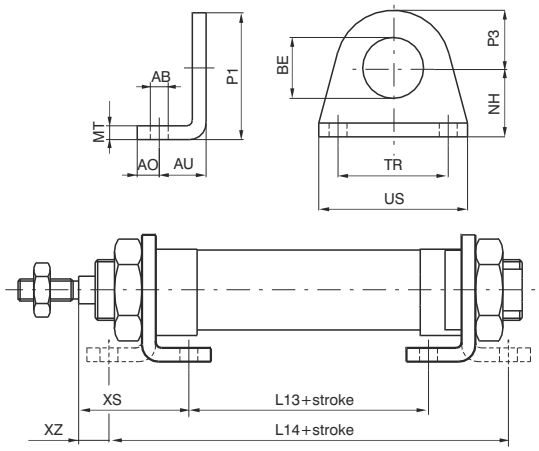

Used to mount the cylinder on the mounting plane with the rod parallel to said plane. Use one for short strokes and two for long strokes.
It is made stamped stainless steel AISI 304. Attached to the end plates by means of nuts (or lock nuts) 05X.

Bore	16	20	25	32
AB (H13)	5,5	6,5	6,5	6,5
AO	6	8	8	8
AU	14	17	17	17
BE	16	22	22	30
L13 (±1)	36	44	44	45
L14 (±1)	84	102	102	103
MT	4	5	5	5
NH (±0,3)	20	25	25	28
P1	33	45	45	50
P3	13	20	20	22
TR (Js14)	32	40	40	52
US	42	54	54	66
XS (±1,4)	32	36	40	40
XZ (±1,4)	8	7	11	11
Weight gr.	45	90	90	110

Flange

Ordering code
1200.Ø.02X

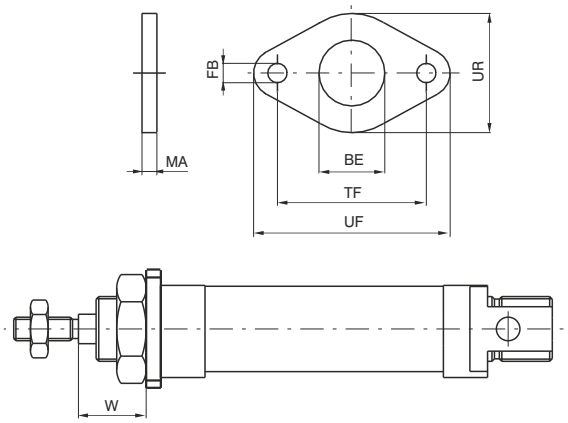

Use to mount the microcylinder at a right angle to the mounting plane. Attached to the front (or rear) endcap by a nut (or lock nut)05X. Made of stainless steel AISI 304.

Bore	16	20	25	32
BE	16	22	22	30
FB (H13)	5,5	6,5	6,5	6,5
UF	53	66	66	68
UR	30	40	40	50
MA	4	5	5	5
TF (JS14)	40	50	50	52
W (±1,4)	18	19	23	23
Weight gr.	40	85	85	100

Rear eye

Ordering code
1200.Ø.03X (1 piece)

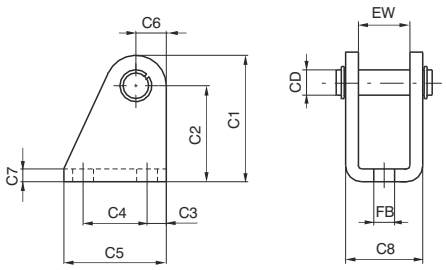

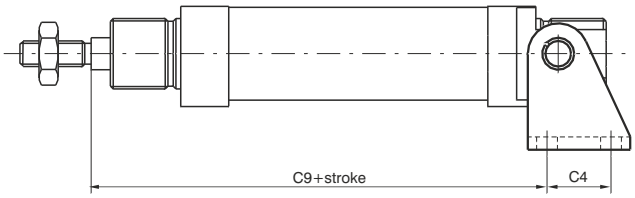

Used to mount by using the rear end cover to mount either parallel or at a right angle to the mounting plane. Allows the cylinder to oscillate and self-align with the linked element to the rod. Necessary to use when the rod may be subject to lateral forces during travel. Made of stamped stainless steel AISI 304.

Bore	16	20	25	32
CD	6	8	8	12
C1	33,5	39,5	39,5	44,5
C2 (±0,3)	27	30	30	33
C3	5	6	6	7
C4	15	20	20	24
C5	25	32	32	38
C6	6,5	9,5	9,5	11,5
C7	3	4	4	4
C8	18	24	24	34
C9 (±0,4)	80,5	91,5	100,5	100,5
EW	12,1	16,1	16,1	26,1
FB (H13)	5,5	6,5	6,5	6,5
Weight gr.	35	75	75	135

Cylinder rod fork / Nut or lock nut for the endcaps

Ordering code
1200.Ø.04X (with pin)
1200.Ø.05X (1 piece)

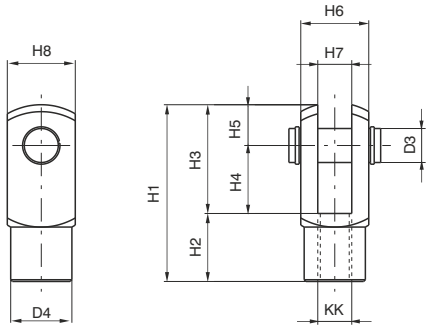

Fork:
Similar to hinge 03X, mounted on the rod thread, assures a regular operation even in the presence of significant forces to the linked element. Made of stainless steel AISI 304.
Nut:
Used to fasten flanges or feet to the endcaps of the microcylinder. The nuts are mounted on BOREs that go from 16 to 25, the lock nuts on 32. Both are supplied (one piece) with the microcylinders.

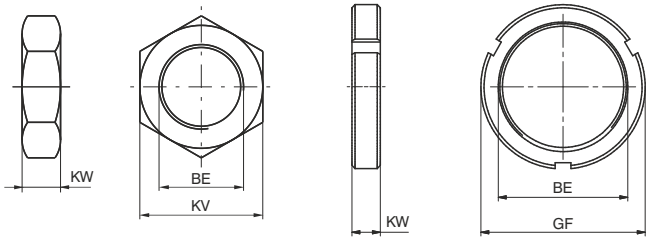

Bore	Weight gr. forks	Weight gr. nut	D3	D4	H1	H2	H3	H4	H5	H6	H7 (B12)	H8	KK	BE	KV	GF	KW
16	20	16	6	10	31	12	19	12	7	12	6	12	M6X1	M16X1.5	22	-	6
20	45	25	8	14	42	16	26	16	10	16	8	16	M8X1.25	M22X1.5	30	-	7
25	90	25	10	18	52	20	32	20	12	20	10	20	M10X1.25	M22X1.5	30	-	7
32	90	42	10	18	52	20	32	20	12	20	10	20	M10X1.25	M30X1.5	-	42	8

General

The new 12X stainless steel ISO 6432 cylinders Series are designed for corrosion resistance application such as marine, pharmaceutical and food ambiences.
The pre lubrication grease used is NSF H1 certified for food application.
Specific care has been taken during the design stages and the result is a clean profile cylinder easy to clean and free from possible residue build-up areas. All parts in contact with the external environment are in Stainless steel 316L and the seals are available in three different compounds for different temperature applications:
PUR -30C° - +80C°, FPM -5°C - +150°C and NBR -5°C - +70°C.
The range starts from 16 bore up to 63 bore, double acting version standard or with through rod, magnetic or not magnetic piston available.
The end caps are crimped onto the barrel for bore sizes 16 to 25 and screwed on the barrel from 32 to 63 bore.
Depending on the type of mounting required it is possible to choose different end caps style.
The piston is aluminium and the sensor bracket, when required is in stainless steel 316 with plastic adaptor or in plastic material. The cylinder can be fixed with the wide range of stainless steel accessories.

Construction characteristics

End caps, barrel, piston rod	Stainless steel AISI 316
Piston	Aluminium
Seals	NBR (PUR piston rod seals)
	FPM
	PUR
Fixing / Accessories	AISI 316 / 304

Technical characteristics

Fluid	Filtered and preferably lubricated air														
Max. pressure	10 bar														
Bore	Ø	16	-	20	-	25	-	32	-	40	-	50	-	63	
Cushioning lenght	mm	15	-	18	-	18	-	18	-	22	-	22	-	25	

Operating temperature

Seals material	Operating temperature	Piston		Cushioning		Bores
		Magnetic	Non magnetic	Pneumatic adjustable	Pneumatic fix	
NBR	-5°C - +70°C	●	●	●	●	Ø16-Ø20-Ø25-Ø32-Ø40-Ø50-Ø63
FPM	-5°C - +80°C	●		●	●	Ø16-Ø20-Ø25-Ø32-Ø40-Ø50-Ø63
	-5°C - +150°C		●	●	●	Ø16-Ø20-Ø25-Ø32-Ø40-Ø50-Ø63
PUR	-5°C - +70°C	●	●	●	●	Ø16-Ø20-Ø25-Ø32
	-30°C - +80°C	●	●	●	●	Ø40-Ø50-Ø63
		●	●		●	Ø16-Ø20-Ø25-Ø32-Ø40-Ø50-Ø63

Please follow the suggestions below to ensure a long life for these cylinders:
- use clean and lubricated air
- correct alignment during assembly with regard to the applied load so as to avoid radial components or bending the rod.
- avoid high speeds together with long strokes and heavy loads: this would produce kinetic energy which the cylinder cannot absorb, especially if used as a limit stop (in this case use mechanical stop device)
- evaluate the environmental characteristics of cylinder used (high temperature, hard atmosphere, dust, humidity etc.)

Please note: air must be dried for applications with lower temperature.
Our Technical Department will be glad to help.

Standard strokes

Ø16 :

15 - 25 - 50 - 75 - 80 - 100 - 150 - 160 - 200 - 250 - 300 mm

Ø20 - Ø25 :

15 - 25 - 50 - 75 - 80 - 100 - 150 - 160 - 200 - 250 - 300 - 320 - 350 - 400 mm

Ø32 - Ø63 :

15 - 25 - 50 - 75 - 80 - 100 - 150 - 160 - 200 - 250 - 300 - 320 - 350 - 400 - 450 - 500 mm

Coding key

12X _ _ . _ _ _ . _ _ _ _ . _ . _

FUNCTION	
A	Double acting 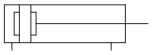
B	Double acting cushioned 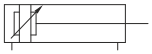
C	Double acting through rod 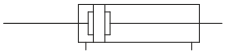
D	Double acting cushioned through rod 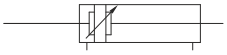

BORE
016
020
025
032
040
050
063

STROKE

MAGNETIC PISTON VARIANTS	
M	Magnetic piston max. temperature +80°C
N	Non magnetic piston

SEALS	
N	NBR
V	FPM
P	PUR

	TYPE		
	FRONT END CAP	BASIC VERSION	REAR END CAP
A	CLEAN PROFILE	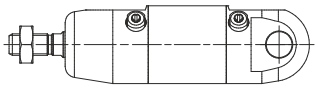	WITH INTEGRATED TRUNNION
B	CLEAN PROFILE	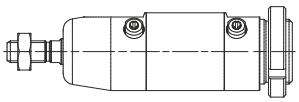	THREADED
C	THREADED	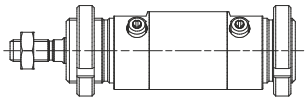	THREADED
D	THREADED	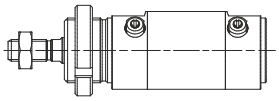	SHORT END CAP
E*	FOR PIN	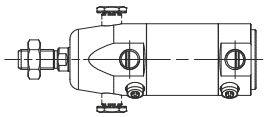	SHORT END CAP

* Available only for Ø32 - Ø40 - Ø50 - Ø63

	END CAP	PUSH/PULL ROD VERSION	END CAP
S	THREADED	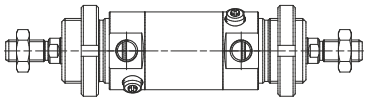	THREADED
T	THREADED	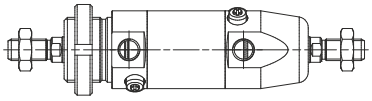	CLEAN PROFILE

4

Cylinder type "A"

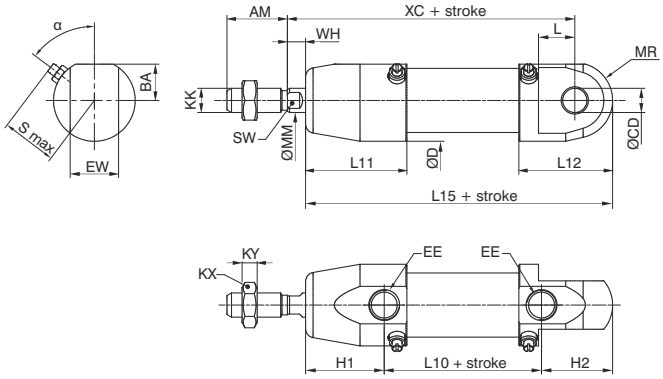

from Ø16 to Ø25

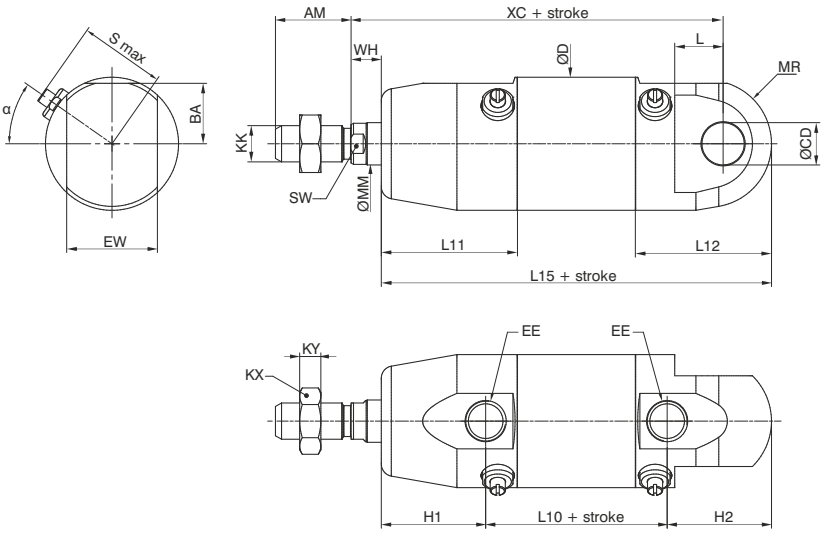

from Ø32 to Ø63

Cylinder type "B"

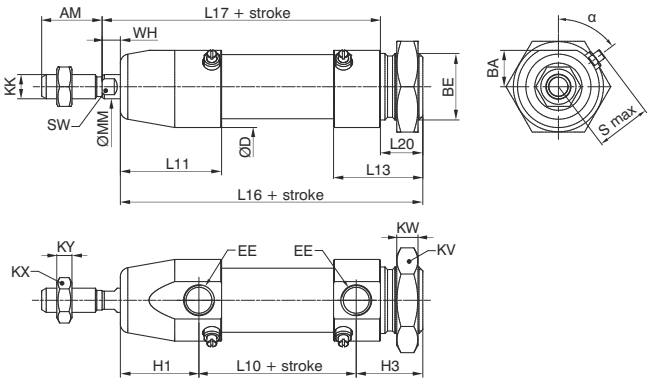

from Ø16 to Ø25

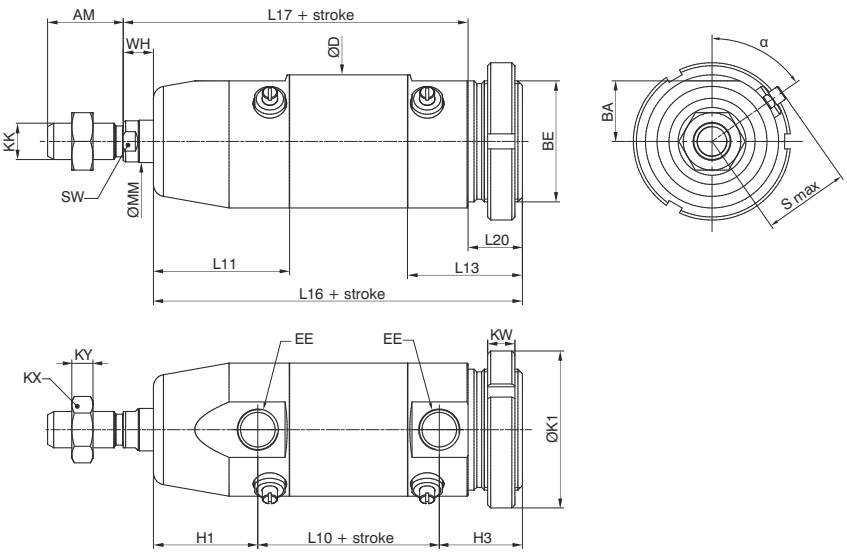

from Ø32 to Ø63

Cylinder type "C"

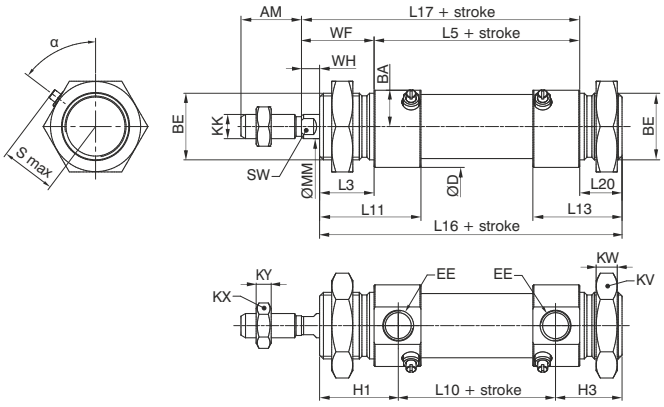

from Ø16 to Ø25

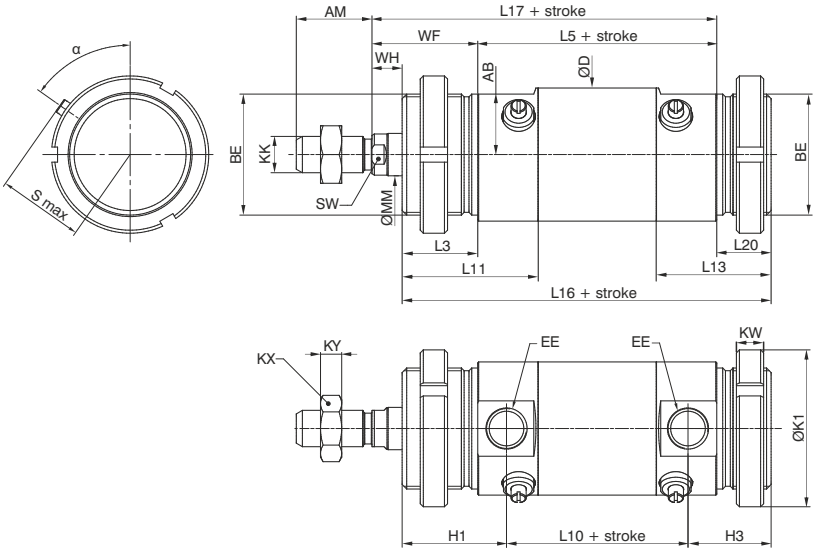

from Ø32 to Ø63

Cylinder type "D"

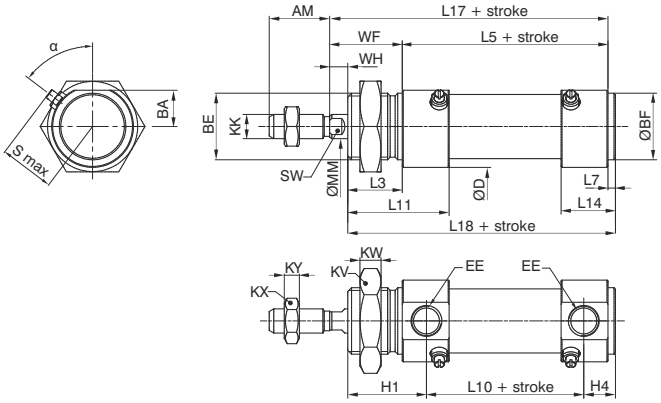

from Ø16 to Ø25

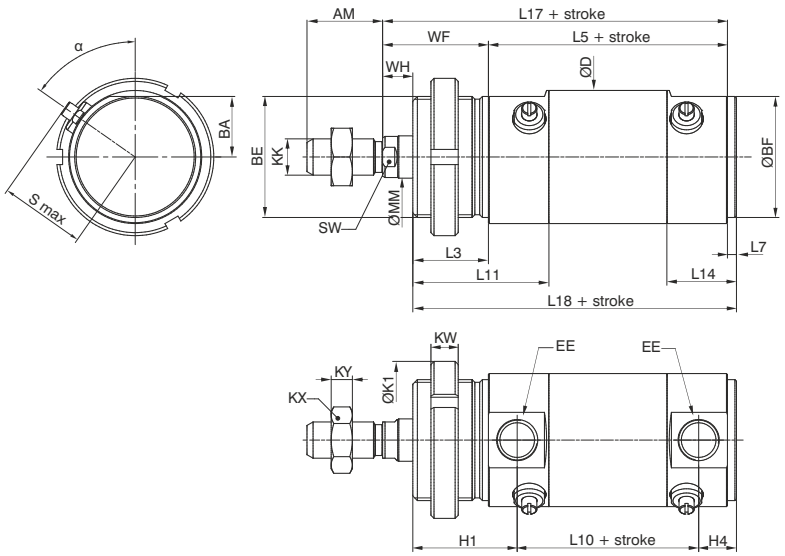

from Ø32 to Ø63

Cylinder type "E"

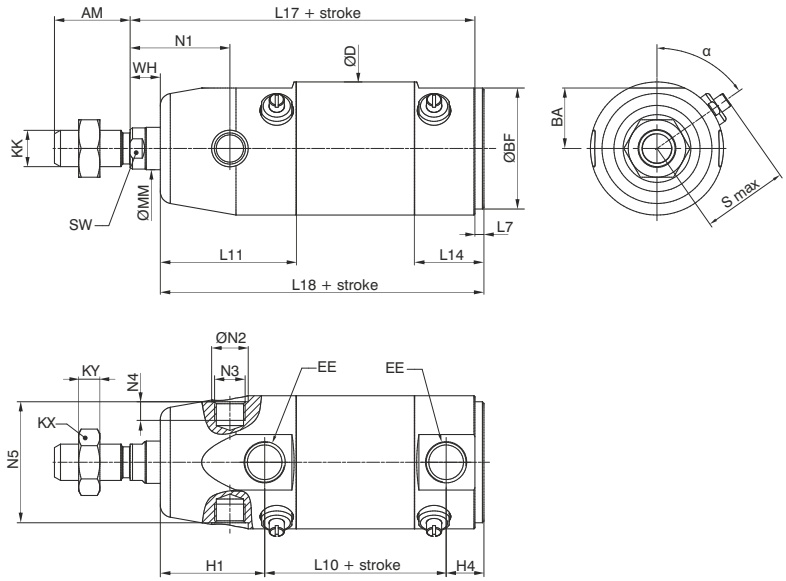

from Ø32 to Ø63

Cylinder type "S"

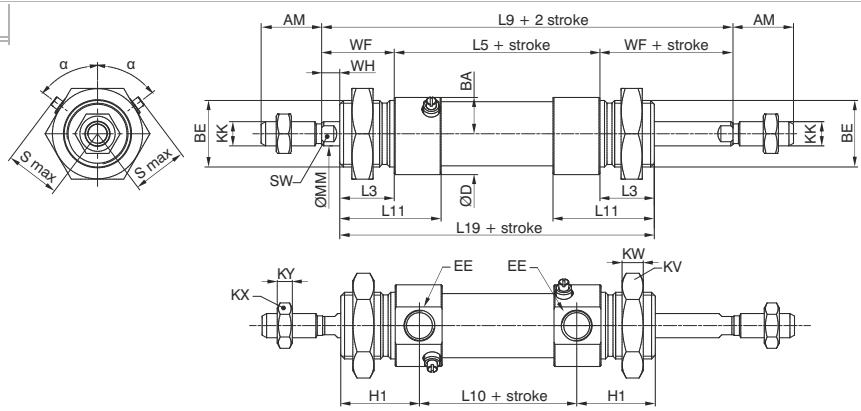

from Ø16 to Ø25

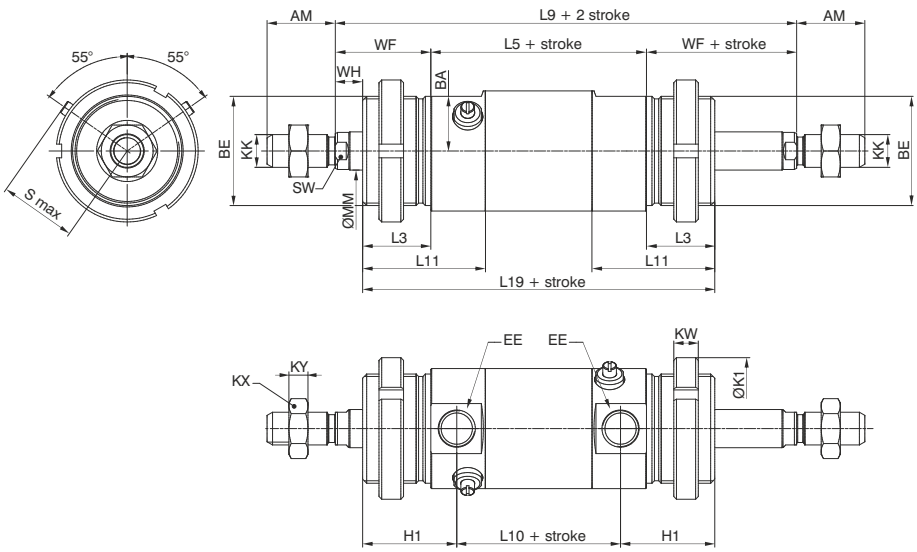

from Ø32 to Ø63

Cylinder type "T"

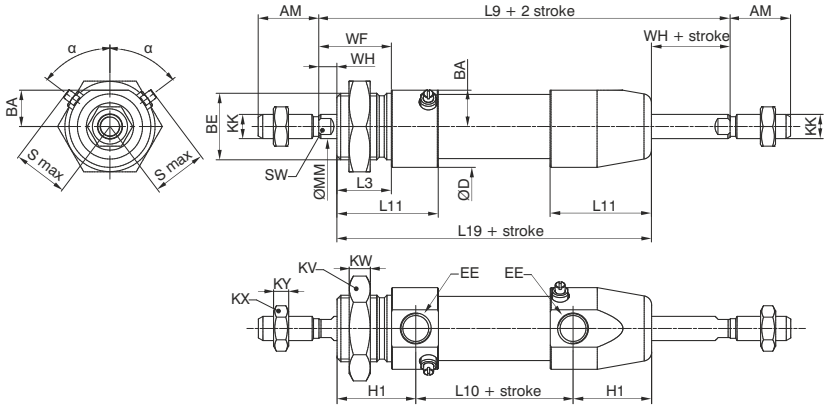

from Ø16 to Ø25

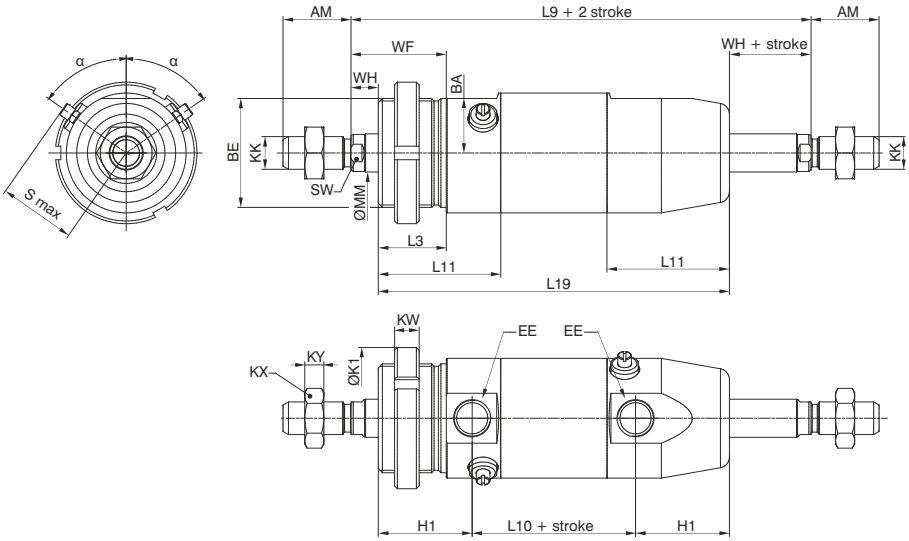

from Ø32 to Ø63

4

Table of dimensions

Bore	Ø16	Ø20	Ø25	Ø32	Ø40	Ø50	Ø63
α	53°	53°	53°	55°	55°	55°	55°
AM	16	20	22	20	25	25	32
BA	9	12	13,5	16	20	25	31
BE	M16x1,5	M22x1,5	M22x1,5	M30x1,5	M40x1,5	M40x1,5	M45x1,5
ØBF	16	22	22	30	40	40	45
EE	M5	G1/8	G1/8	G1/8	G1/4	G1/4	G3/8
EW	12	16	16	26	30	30	40
ØCD ^{H9}	6	8	8	12	14	14	16
ØD	21	27	30	36	44	54	68
H1	22,5	26	30	30	34,5	34,5	40
H2	17,5	23,5	27,5	30	34,5	34,5	40
H3	16,5	22	22	23	27,5	27,5	30
H4	7,5	10,5	10,5	10,5	12,5	12,5	16
ØK1	/	/	/	/	52	52	60
KK	M6x1	M8x1,25	M10x1,25	M10x1,25	M12x1,75	M12x1,75	M16x1,5
KX	10	13	17	17	19	19	24
KY	4	5	6	6	7	7	8
KV	22	30	30	42	/	/	/
KW	6	7	7	8	9	9	10
L	9	12	14	13	16	16	22
L3	17	18	22	22	25	25	28
L5	56	68	69	69	79	82	106
L7	2	2,5	2,5	2,5	3	3	4
L9	100	116	125	125	149	152	180
L10	45	52	53	53	60	63	82
L11	28	33,5	37	38,5	45	45	54
L12	23	31	34,5	38,5	45	45	54
L13	22	29,5	29	31,5	38	38	44
L14	12,8	18	17,5	19	23	23	30
L15	85	101,5	110,5	113	129	132	162
L16	84	100	105	106	122	125	152
L17	78	92	97	97	114	117	143
L18	75	88,5	93,5	93,5	107	110	138
L19	90	104	113	113	129	132	162
L20	11	14	14	15	18	18	18
ØMM	6	8	10	12	14	16	20
MR	8	12,5	12,5	17	21	26	34,5
N1	/	/	/	27	33	40	45
ØN2 $^{+0/-0,05}$	/	/	/	10,1	12,1	14,1	16,1
N3	/	/	/	M8x0,75	M10x1	M12x1	M14x1
N4	/	/	/	5,5	6	8,7	11,7
N5 $^{+0,1/-0}$	/	/	/	32	40	50	64
Smax	15,5	18,5	19,5	25	28,5	33,5	40
SW	5	6	8	10	12	12	17
WF	22	24	28	28	35	35	37
WH	5	6	6	6	10	10	9
XC	82	95	104	105	123	126	154

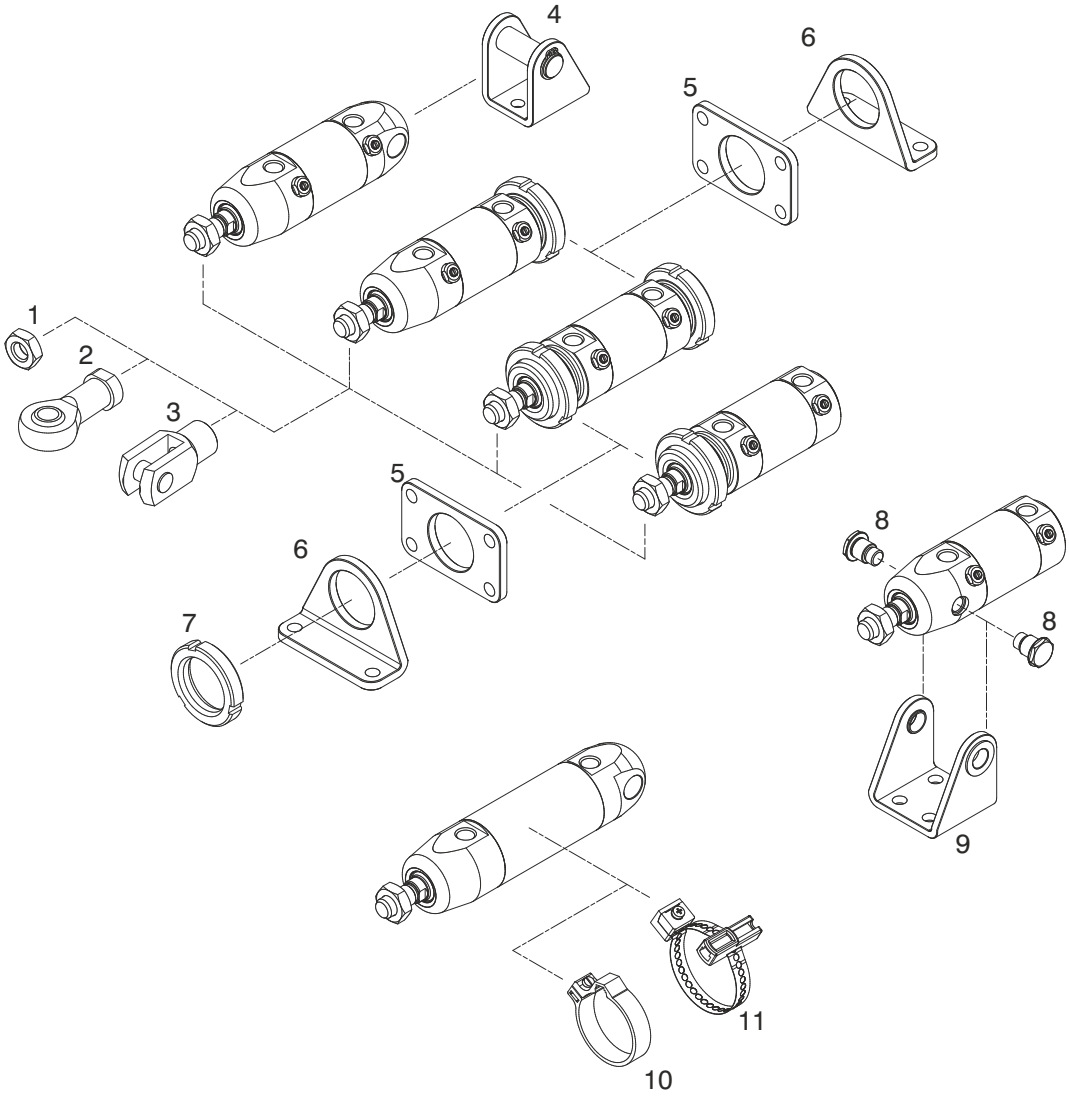

Position	Description	Ordering code	Materials
1	Rod lock nut	12X.Ø.11	Stainless steel AISI 316
2	Ball joint	12X.Ø.10	Stainless steel
3	Fork	12X.Ø.04	Stainless steel
4	Rear clevis	12X.Ø.03	Stainless steel
5	Flange	12X.Ø.02	Stainless steel AISI 316
6	Foot	12X.Ø.01	Stainless steel AISI 316
7	Nut or lock nut for the endcaps	12X.Ø.05	Stainless steel AISI 316
8	Pin for front clevis (Ø32 - Ø63)	12X.Ø.09	Stainless steel AISI 316
9	Front clevis (Ø32 - Ø63)	12X.Ø.08	Stainless steel AISI 316
10	Sensor clamp (Ø16 - Ø50)	12X.Ø.FS	Technopolymer
11	Sensor clamp (Ø16 - Ø63)	12X.Ø.FSX	Stainless steel Technopolymer

Sensor clamps cod. 1580._, MRS._, MHS._

Ordering code	The kit comprises:
12X.Ø.FS	n° 1 clamp (Technopolymer) n° 1 screw (AISI 304) n° 1 nut (AISI 304)

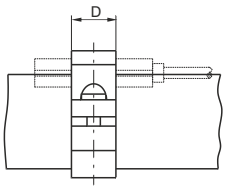

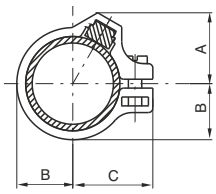

Table of dimensions

Bore	Ø16	Ø20	Ø25	Ø32	Ø40	Ø50
A	14,5	16	17,5	20,5	22	29
B	10,5	12,5	15,3	20	24	29
C	16	18	20,5	26	30	35
D	10	10	10	10	10	10
Weight (gr.)	3	5	7	8	10	11

4

Sensor clamps cod. 1580._, MRS._, MHS._

Ordering code	The kit comprises:
12X.Ø.FSX	n° 1 clamp (AISI 304) n° 1 switch bracket + support (Technopolymer) n° 1 screw (AISI 304) n° 1 nut (AISI 304)

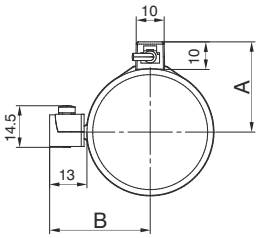

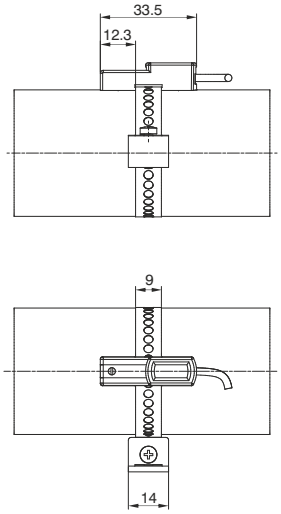

Table of dimensions

Bore	Ø16	Ø20	Ø25	Ø32	Ø40	Ø50	Ø63
A	19	21	23	28	32	37	44
B	22	24	26	31	35	40	47

Foot

Ordering code
12X.Ø.01

The kit comprises:
n° 1 foot (AISI 316)

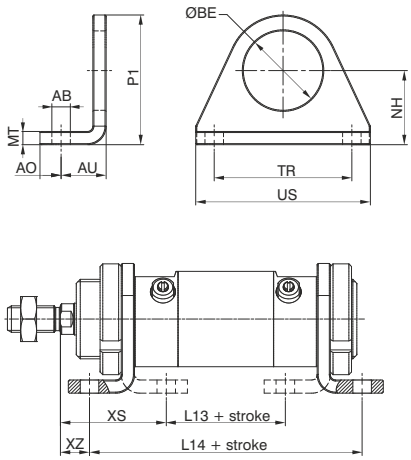

Used to mount the cylinder on the mounting plane with the rod parallel to said plane. Use one for short strokes and two for long strokes.
It is made stamped stainless steel AISI 316.

Bore	16	20	25	32	40	50	63
AB (H13)	5,5	6,5	6,5	6,5	9	9	9
AO	6	8	8	8	10	10	10
AU	14	17	17	17	20	20	20
ØBE	16	22	22	30	40	40	45
L13 (±1)	36	44	44	45	49	52	78
L14 (±1)	84	102	102	103	119	122	146
MT	4	5	5	5	5	5	6
NH (±0.3)	20	25	25	28	40	40	50
P1	33	45	45	50	66,5	66,5	80
TR (Js14)	32	40	40	52	70	70	70
US	42	54	54	66	90	90	90
XS (±1.4)	32	36	40	40	50	50	51
XZ (±1.4)	8	7	11	11	15	15	17
Weight gr.	45	90	90	110	210	210	262

Flange

Ordering code
12X.Ø.02

The kit comprises:
n° 1 flange (AISI 316)

(For Ø16 - Ø20 - Ø25)

(For Ø32 - Ø40 - Ø50 - Ø63)

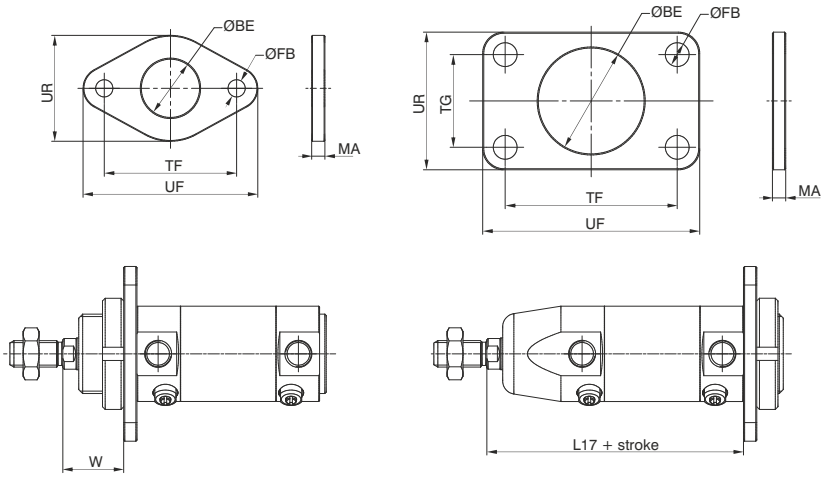

Use to mount the microcylinder at a right angle to the mounting plane.
Made of stainless steel AISI 316.

Bore	16	20	25	32	40	50	63
ØBE	16	22	22	30	40	40	45
ØFB (H13)	5,5	6,5	6,5	6,5	9	9	9
UF	53	66	66	68	82	82	96
UR	30	40	40	50	52	52	70
MA	4	5	5	5	5	5	6
TF (JS14)	40	50	50	52	65	65	76
TG	/	/	/	/	35	35	50
W (±1.4)	18	19	23	23	30	30	31
L17	78	92	97	97	114	117	143
Weight gr.	40	85	85	100	105	105	225

Rear clevis

Ordering code	The kit comprises:
12X.Ø.03	n° 1 clevis (AISI 316) n° 1 pin (AISI 316) n° 2 circlips (AISI 420)

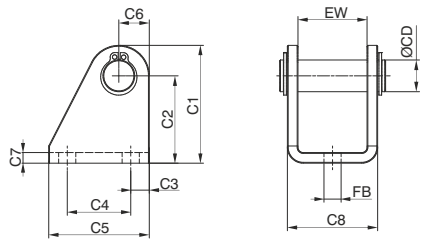

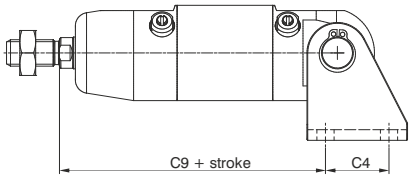

Used to mount by using the rear end cover to mount either parallel or at a right angle to the mounting plane. Allows the cylinder to oscillate and self-align with the linked element to the rod. Necessary to use when the rod may be subject to lateral forces during travel.
Made of stamped stainless steel.

Bore	16	20	25	32	40	50	63
ØCD	6	8	8	12	14	14	16
C1	33,5	39,5	39,5	44,5	53,5	53,5	64
C2 (±0.3)	27	30	30	33	40	40	50
C3	5	6	6	7	10	10	8
C4	15	20	20	24	28	28	34
C5	25	32	32	38	45	45	50
C6	6,5	9,5	9,5	11,5	13,5	13,5	14
C7	3	4	4	4	4	4	6
C8	18	24	24	34	38	38	52
C9 (±0.4)	80,5	91,5	100,5	100,5	119,5	122,5	148
EW	12,1	16,1	16,1	26,1	30,5	30,5	40,5
FB (H13)	5,5	6,5	6,5	6,5	8,5	8,5	9
Weight gr.	35	75	75	135	138	138	284

Rod lock nut / Nut or lock nut for the end cap

Ordering code	
Rod lock nut **12X.Ø.11**	The kit comprises: n° 1 rod lock nut (AISI 316)
Nut / Lock nut for the end cap **12X.Ø.05**	The kit comprises: n° 1 nut / lock nut for the end cap (AISI 316)

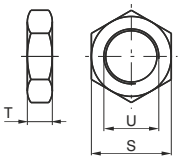

Rod lock nut:
Mounted on the rod thread.
Made of stainless steel AISI 316.
Nut / Lock nut for the end cap:
Used to fasten flanges or feet to the endcaps of the microcylinder. The nuts are mounted on diameters that go from Ø16 to Ø25, the lock nuts from Ø32 to Ø63. Both are supplied with the microcylinders.

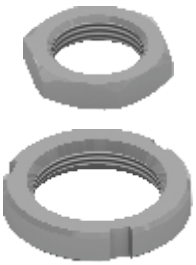

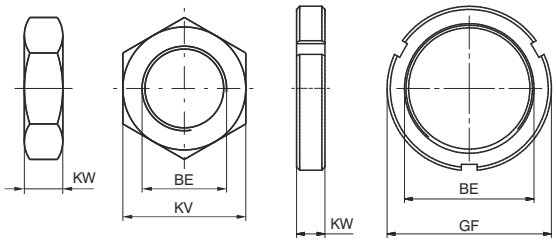

Bore	S	T	U	Rod lock nut weight (gr.)	BE	KV	GF	KW	Nut / Lock nut for the end caps weight (gr.)
16	10	4	M6X1	3	M16X1,5	22	-	6	16
20	13	5	M8X1,25	4	M22X1,5	30	-	7	25
25	17	6	M10X1,25	9	M22X1,5	30	-	7	25
32	17	6	M10X1,25	9	M30X1,5	-	42	8	42
40	19	7	M12X1,75	12	M40X1,5	-	52	9	62
50	19	7	M12X1,75	12	M40X1,5	-	52	9	62
63	24	8	M16X1,5	21	M45X1,5	-	60	10	100

Front clevis

Ordering code
12X.Ø.08

The kit comprises:
n° 1 clevis (AISI 316)
n° 2 bushings (Technopolymer)

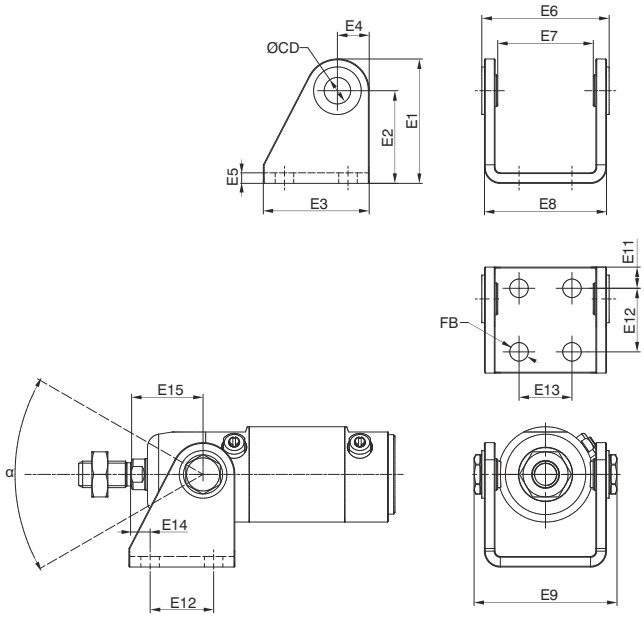

Used to mount by using the front end cap to mount parallel to the mounting plane. Allows the cylinder to oscillate and self-align with the linked element to the rod. Necessary to use when the rod may be subject to lateral forces during travel.
Made of stamped stainless steel AISI 316.

Bore	E1	E2 (±0,2)	E3	E4	E5	E6	E7	E8	E9	E11	E12	E13	E14	E15	FB (H13)	ØCD	α	Weight (gr.)
32	47	35	40	12	4	48	36	46	54	8	24	20	7	27	7	10	50°	121
40	53	40	50	13	4	60	49	58	68	10	30	28	6	33	9	12	50°	175
50	59	45	54	14	6	74	54	72	84	10	34	36	10	40	9	14	50°	330
63	65	50	65	16	6	88	72	86	98	15	35	42	11	45	9	16	40°	458

Pin for front clevis

Ordering code
12X.Ø.09

The kit comprises:
n° 1 pin (AISI 316)

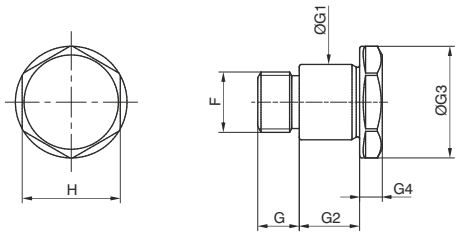

Bore	32	40	50	63
G	5,5	6	8,5	11
G1 (h7)	10	12	14	16
G2	8	10	12	12
G3	15	17	19	24
G4	3	4	5	5
F	M8X0,75	M10X1	M12X1	M14X1
H	13	15	17	21

Ball joint

Ordering code
12X.Ø.10

The kit comprises:
n° 1 ball joint (AISI 304 and 420)

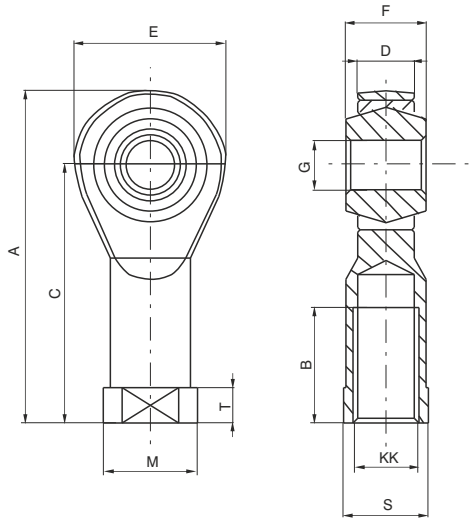

Mounted on the rod thread, assures a regular operation even in the presence of significant forces to the linked element.
Made of stainless steel AISI 304 and 420.

Bore	16	20	25	32	40	50	63
A	40	48	57	57	66	66	85
B	12	16	20	20	22	22	28
C	30	36	43	43	50	50	64
D	6,75	9	10,5	10,5	12	12	15
E	20	24	28	28	32	32	42
F	9	12	14	14	16	16	21
G (H 7)	6	8	10	10	12	12	16
KK	M6	M8	M10X1,25	M10X1,25	M12X1,75	M12X1,75	M16X1,5
M	13	16	19	19	22	22	27
S	11	14	17	17	19	19	22
T	5	5	6,5	6,5	6,5	6,5	8
Weight gr.	25	25	75	75	112	112	222

Cylinder rod fork

Ordering code
12X.Ø.04

The kit comprises:
n° 1 fork (AISI 303)
n° 1 pin (AISI 303)
n° 2 circlips (AISI 420)

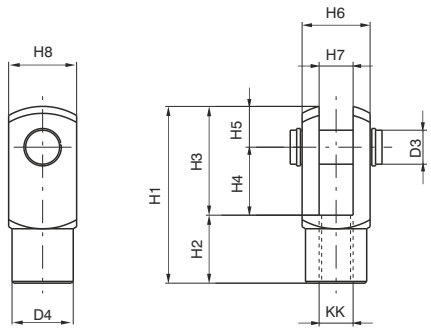

Mounted on the rod thread, assures a regular operation even in the presence of significant forces to the linked element. Made of stainless steel.

Bore	D3	D4	H1	H2	H3	H4	H5	H6	H7 (B12)	H8	KK	Weight gr.
16	6	10	31	12	19	12	7	12	6	12	M6X1	20
20	8	14	42	16	26	16	10	16	8	16	M8X1.25	45
25	10	18	52	20	32	20	12	20	10	20	M10X1.25	90
32	10	18	52	20	32	20	12	20	10	20	M10X1.25	90
40	12	20	62	18	38	24	14	24	12	24	M12X1.75	121
50	12	20	62	18	38	24	14	24	12	24	M12X1.75	121
63	16	26	83	32	51	32	19	32	16	32	M16X1.5	340

General

They conform to CNOMO standards, fully complying with CETOP and ISO standards, with mounted fixing devices 32 to 100.

Construction characteristic

End plates	solid aluminium bar up to Ø100, alloy aluminium from Ø125 to Ø200
Rod	C43 chromed steel, by thickness or stainless steel
Barrel	oxidised aluminium
Tie rods	steel with rolled threads
Cushion bearings	aluminium
Rod-guide bushing	brass (Ø32, 40, 50) in aluminium with self-lubricating bearings in sinterized bronze for the remaining BOREs
Piston	aluminium lathed from bar
Seals	Standard: NBR Oil resistant rubber, PUR Piston rod seals (FPM seals available upon request)

Technical characteristic

Fluid	filtered and lubricated air - hydraulic oil (with special bushing)
Pressure	max. 12 bar (air) - 20 bar (oil)
Operating temperature	-5 °C - +70 °C with 1303-1308 standard seals -5 °C - +80 °C with FPM seals for 1306-1308 series (magnetic piston) -5 °C - +150 °C with FPM seals for 1303-1305 series (non magnetic piston)
Cushioning length	Ø 32 - 40 - 50 - 63 - 80 - 100 - 125 - 160 - 200 mm 20 - 20 - 22 - 24 - 24 - 25 - 27 - 35 - 35

Please follow the suggestions below to ensure a long life for these cylinders:
- use clean and lubricated air
- correct alignment during assembly with regard to the applied load so as to avoid radial components or bending the rod.
- avoid high speeds together with long strokes and heavy loads: this would produce kinetic energy which the cylinder cannot absorb, especially if used as a limit stop (in this case use mechanical stop device)
- evaluate the environmental characteristics of cylinder used (high temperature, hard atmosphere, dust, humidity etc.)

Please note: air must be dried for applications with lower temperature.
Use hydraulic oils H class (ISO Vg32) for correct continued lubrication.
Our Technical Department will be glad to help.

Standard strokes

From 0 to 150 every 25 mm; from 150 to 500 every 50 mm; from 500 to 1000 every 100 mm. (for all BOREs)

Basic version

Ordering code
Non magnetic piston
1303.Ø.stroke.01A (CNOMO) **1304.Ø.stroke.01A** (CETOP) **1305.Ø.stroke.01A** (ISO)
Magnetic piston
1306.Ø.stroke.01A (CNOMO) **1307.Ø.stroke.01A** (CETOP) **1308.Ø.stroke.01A** (ISO)

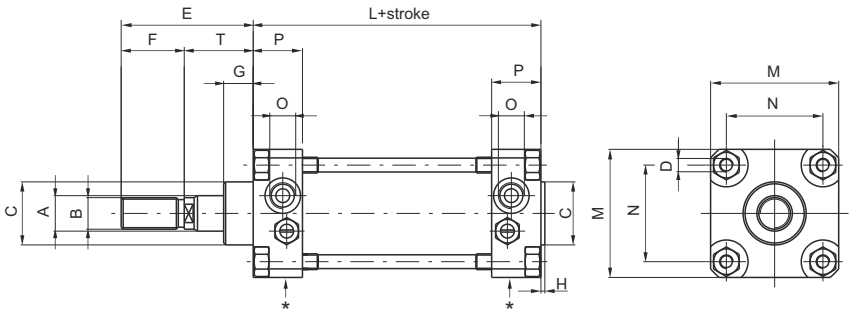

Push/Pull version

Ordering code
Non magnetic piston
1303.Ø.stroke.02A (CNOMO) **1304.Ø.stroke.02A** (CETOP) **1305.Ø.stroke.02A** (ISO)
Magnetic piston
1306.Ø.stroke.02A (CNOMO) **1307.Ø.stroke.02A** (CETOP) **1308.Ø.stroke.02A** (ISO)

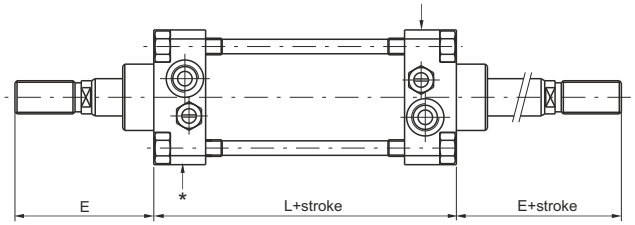

Tandem push with a common rod

Ordering code
Non magnetic piston
1303.Ø.stroke.H (CNOMO) **1304.Ø.stroke.H** (CETOP) **1305.Ø.stroke.H** (ISO)
Magnetic piston
1306.Ø.stroke.H (CNOMO) **1307.Ø.stroke.H** (CETOP) **1308.Ø.stroke.H** (ISO)

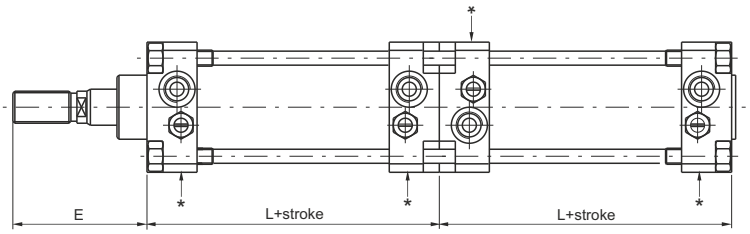

Tandem push with independent rods

Ordering code
Non magnetic piston
1303.Ø.stroke.stroke1.N (CNOMO) **1304.Ø.stroke.stroke1.N** (CETOP) **1305.Ø.stroke.stroke1.N** (ISO)
Magnetic piston
1306.Ø.stroke.stroke1.N (CNOMO) **1307.Ø.stroke.stroke1.N** (CETOP) **1308.Ø.stroke.stroke1.N** (ISO)

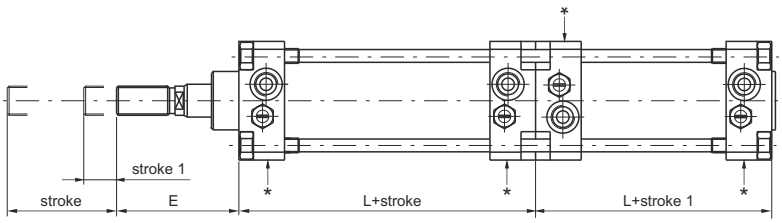

Opposed tandem with common rods

Ordering code
Non magnetic piston
1303.Ø.stroke.stroke1.R (CNOMO) **1304.Ø.stroke.stroke1.R** (CETOP) **1305.Ø.stroke.stroke1.R** (ISO)
Magnetic piston
1306.Ø.stroke.stroke1.R (CNOMO) **1307.Ø.stroke.stroke1.R** (CETOP) **1308.Ø.stroke.stroke1.R** (ISO)

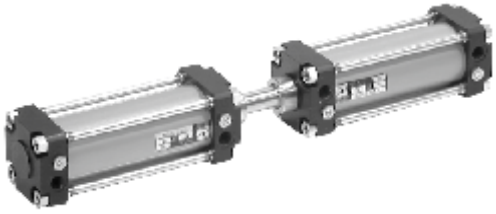

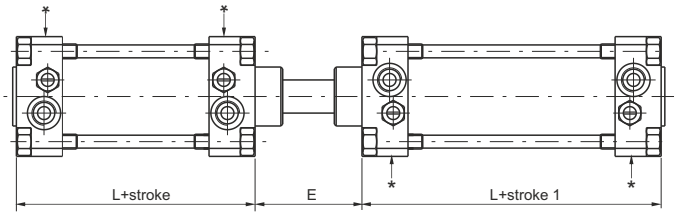

Tandem with opposed rods

Ordering code
Non magnetic piston
1303.Ø.stroke.stroke1.U (CNOMO) **1304.Ø.stroke.stroke1.U** (CETOP) **1305.Ø.stroke.stroke1.U** (ISO)
Magnetic piston
1306.Ø.stroke.stroke1.U (CNOMO) **1307.Ø.stroke.stroke1.U** (CETOP) **1308.Ø.stroke.stroke1.U** (ISO)

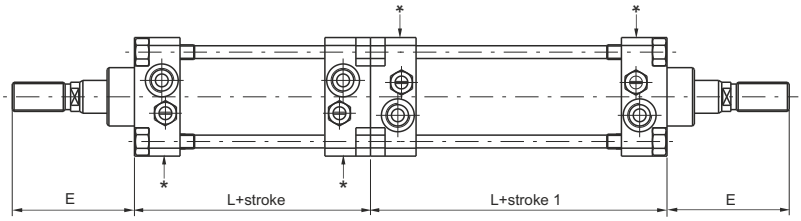

Variants
Add "X" to the cylinder code to order cylinders with STAINLESS STEEL rods. Example:**1303.32.250.01AX.**
Add "V" to the cylinder code to order cylinders with FPM seals. Example:**1303.32.250.01AV.**
Add "MA" to the cylinder code to order cylinders single acting front spring, with strokes not superior to 50. Example:**1303.32.50.01AMA.**
Add "MP" to the cylinder code to order cylinders single acting rear spring, with strokes not superior to 50. Example:**1303.50.25.01AMP.**
Note: Cushion adjustment (for Ø 32, Ø 40, Ø 125, Ø 160 and Ø 200) is on the side indicated by ★ (see drawings).

Table of dimensions

Bore		32	40	50	63	80	100	125	160	200
A (f7)		12	18	18	22	22	30	30	40	40
B - CNOMO (6g)		M10x1,5	M16x1,5	M16x1,5	M20x1,5	M20x1,5	M27x2	M27x2	M36x2	M36x2
B - CETOP (6g)		M10x1,25	M12x1,25	M16x1,5	M16x1,5	M20x1,5	M20x1,5	M24x2	M36x2	M36x2
B - ISO (6g)		M10x1,25	M12x1,25	M16x1,5	M16x1,5	M20x1,5	M20x1,5	M27x2	M36x2	M36x2
C (d11)		25	32	32	45	45	55	55	65	65
H		2,5	2	2	2	2	2	3	3	3
D		M6	M6	M8	M8	M10	M10	M12	M16	M16
E - CNOMO		45	70	70	85	85	110	110	135	135
E - CETOP		44	52	67	67	82	87	109	152	162
E - ISO		46	52	67	67	82	87	115	152	162
F - CNOMO		20	36	36	46	46	63	63	85	85
F - CETOP		20	24	32	32	40	40	48	72	72
F - ISO		22	24	32	32	40	40	54	72	72
G		15	15	15	20	20	20	20	25	25
M		45	52	65	75	95	115	140	180	220
N		33	40	49	59	75	90	110	140	175
O		G 1/8"	G 1/4"	G 1/4"	G 3/8"	G 3/8"	G 1/2"	G 1/2"	G 3/4"	G 3/4"
P		16	23	25	31	31	35	36	45	45
T - CNOMO		25	34	34	39	39	47	47	50	50
T - CETOP-ISO		24	28	35	35	42	47	61	80	90
L - CNOMO (±1)		80	110	110	125	125	145	145	180	180
L - CETOP-ISO (±1)		98	110	110	125	136	145	168	180	190
STROKE TOLERANCE: + 2 mm.										
WEIGHT IN gr. OF THE CYLINDERS WITH VARIOUS BARRELS (BASIC VERSION)										
Bore		32	40	50	63	80	100	125	160	200
Aluminium	stroke 0	580	1010	1350	2110	3350	5400	7450	13300	18300
	every 10 mm	24	38	47	63	75	117	130	235	250
FOR CYLINDERS IN TANDEM THE WEIGHT IS APPROXIMATELY DOUBLE										

4

Sensor brackets codes - 1500._, RS._, HS._

Ordering code	1306.A				1306.B			1306.C	
Bore	Ø32	Ø40	Ø50	Ø63	Ø80	Ø100	Ø125	Ø160	Ø200
L	59	65	76	87	103	121	144	179	215

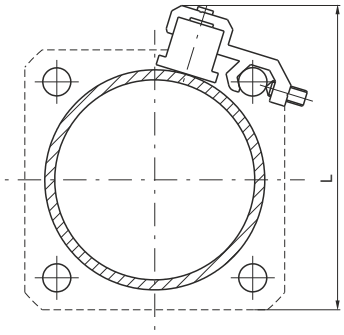

Sensor for microcylinders

For technical characteristics and ordering codes see Chapter 6 (magnetic sensors)

Distributor supports

This accessory allows valves or solenoid valves to mount on the side of the cylinder. Support should be anchored to the tie rods and on it either a threaded distributor can be mounted or a base upon which an ISO distributor can be mounted. Once installed the connections must be done with fittings and pipes. All of the threaded holes on the support plate are dedicated to different valves series as per attached drawing.

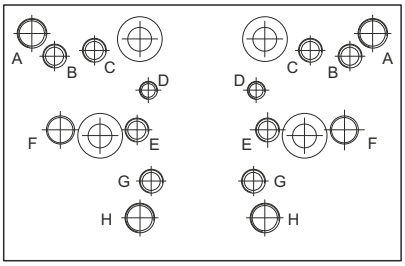

Fixing holes for valves series:

A = 414/2
B = 824
C = 828, T488, 488, 484
D = 2400
E = 2600
F = Bases for ISO distributors
G = 858/2
H = T424

Support

Ordering code
1306.15 (Ø32 - Ø100)

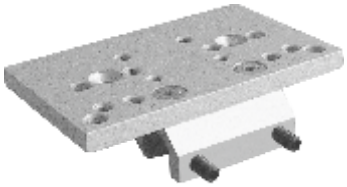

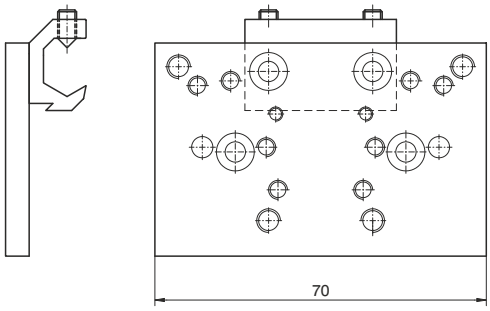

Bases for ISO distributors

Ordering code	
1320.21	bases for ISO 1 electrodistributor
1320.22	bases for ISO 2 electrodistributor

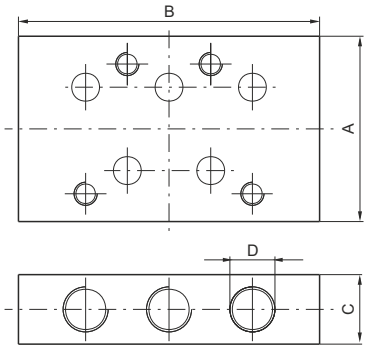

	Dimensions			
	A	B	C	D
bases for ISO 1 electrodistributor	40	75	15	G 1/8"
bases for ISO 2 electrodistributor	50	95	20	G 1/4"

Front and rear flanges

Ordering code
1303.Ø.03F CNOMO) **1304.Ø.03F** (CETOP - ISO)

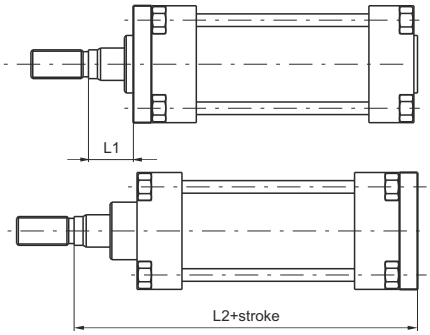

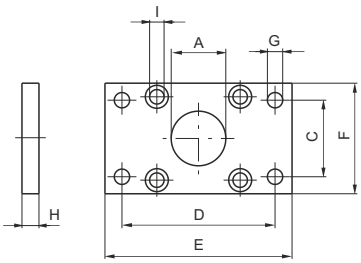

Plate which allows anchorage of the cylinder at a right angle to the plane. It is made of zinc-plated extruded steel.

Bore	32	40	50	63	80	100	125	160	200
A (H11)	25	32	32	45	45	55	55	65	65
C - CNOMO (JS 14)	33	40	49	59	75	90	110	140	175
C - CETOP ISO (JS 14)	32	36	45	50	63	75	90	115	135
D - CNOMO (JS 14)	68	78	94	104	130	150	180	228	268
D - CETOP - ISO (JS 14)	64	72	90	100	126	150	180	230	270
E	80	90	110	120	150	170	205	260	300
F	45	52	65	75	95	115	140	180	220
G - CNOMO (H13)	9	9	11	11	14	14	18	22	22
G - CETOP - ISO (H13)	7	9	9	9	12	14	16	18	22
H (JS 14)	8	8	10	10	12	12	16	20	20
I	6,5	6,5	9	9	10,5	10,5	13,5	16,5	16,5
L1 - CNOMO	17	26	24	29	27	35	31	30	30
L1 - CETOP - ISO	16	20	25	25	30	35	45	60	70
L2 - CNOMO	113	152	154	174	176	204	208	250	250
L2 - CETOP - ISO	130	145	155	170	190	205	245	280	300
Weight gr.	165	200	540	1060	1460	1510	3100	6400	9500

Standard feet

Ordering code
1303.Ø.05F (CNOMO) (1 piece) **1304.Ø.05F** (CETOP - ISO) (1 piece)

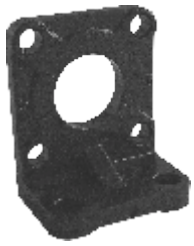

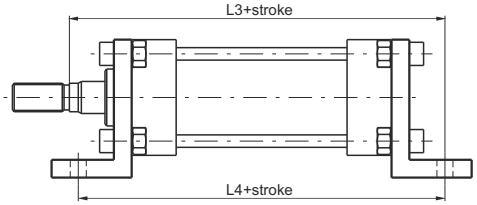

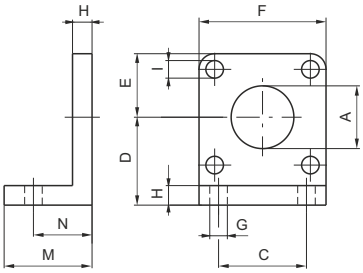

Elements used to anchor the cylinder parallel to the mounting plane. They are made of cast aluminium, painted black.

Bore	32	40	50	63	80	100	125	160	200
A (H11)	25	32	32	45	45	55	55	65	65
C - CNOMO (JS 14)	28	36	45	55	70	90	100	130	170
C - CETOP ISO (JS 14)	32	36	45	50	63	75	90	115	135
D - CNOMO (JS 15)	32	36	45	50	63	73	91	115	135
D - CETOP - ISO (JS 15)	32	36	45	50	63	71	90	115	135
E	22	26	32	37	47	57	70	90	110
F	45	52	65	75	95	115	140	180	220
G - CNOMO (H14)	9	9	11	11	14	14	18	22	22
G - CETOP (H14)	7	9	9	9	12	14	16	18	22
G - ISO (H14)	7	9	9	9	12	14	16	18	22
H	8	8	10	10	12	12	16	20	20
I	7	7	9	9	11	11	13	17	17
M	35	35	45	45	55	55	68	82	91
N - CNOMO (±0,2)	27	27	35	35	43	43	52	62	62
N - CETOP - ISO (±0,2)	22	25,5	30	30	37	37,5	41	60	65
L3 - CNOMO	132	171	179	199	207	235	244	292	292
L3 - CETOP - ISO	144	163	175	190	215	230	270	320	345
L4 - CNOMO	134	164	180	195	211	231	249	304	304
L4 - CETOP - ISO	142	161	170	185	210	220	250	300	320
Weight gr.	55	70	150	175	260	550	920	2200	3200

Short sheet metal feet

Ordering code

1303.Ø.05/1F
(CNOMO - CETOP - ISO)
(1 piece)

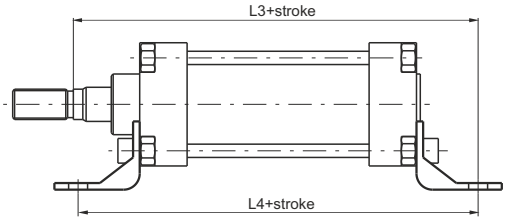

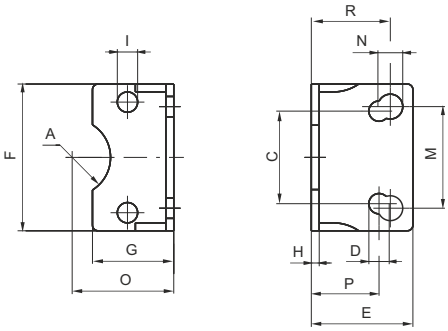

Elements used to anchor the cylinder parallel to the mounting plane. They are made of stamped and pierced sheet metal and painted in black. The mounting holes allow use with CNOMO, CETOP and ISO. Available up to 100 mm. BORE.

Bore	32	40	50	63	80	100
A	13	17	17	23,5	23,5	-
C - CETOP - ISO (JS 14)	32	36	45	50	63	75
D - CETOP - ISO (JS 15)	7	9	9	9	12	14
E	35	36	45	45	55	56
F	45	52	65	75	95	115
G	30	30	36	35	45	44
H	3,5	3,5	3,5	4,5	5	5
I	7	7	9	9	11	11
M - CNOMO (JS 14)	28	36	45	55	70	90
N - CNOMO (JS 15)	9	9	11	11	13	13
O - CNOMO (JS 15)	32	36	45	50	63	73
O - CETOP - ISO (JS 15)	32	36	45	50	63	71
P - CETOP - ISO (±0,2)	22	25,5	30	30	37	37,5
R - CNOMO (±0,2)	27	27	35	35	43	43
L3 - CNOMO	132	171	179	199	207	235
L3 - CETOP - ISO	144	163	175	190	215	230
L4 - CNOMO	134	164	180	195	211	231
L4 - CETOP - ISO	142	161	170	185	210	220
Weight gr.	58	70	118	184	305	385

Large internal and external feet

Ordering code

Internal
1303.Ø.06F
(CNOMO) (1 piece)
(May be used with CETOP-ISO cylinders but are not specified in the standards)
External
1303.Ø.07F
(CNOMO) (1 piece)

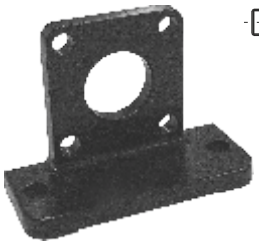

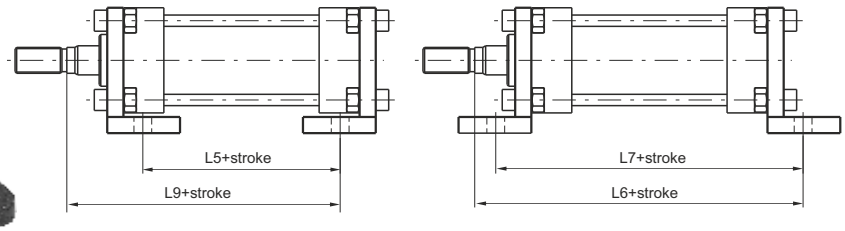

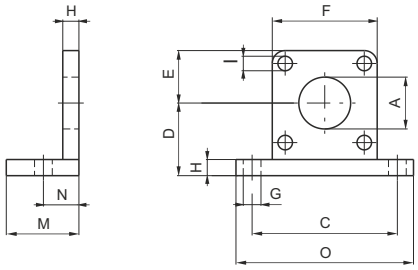

Elements used to anchor the cylinder parallel to the mounting plane. They are made of aluminium alloy and painted black.

Bore	32	40	50	63	80	100	125	160	200
A (H11)	25	32	32	45	45	55	55	65	65
C (JS 14)	65	72	90	100	126	148	180	230	270
D (JS 15)	32	36	45	50	63	73	91	115	135
E	22	26	32	37	47	57	70	90	110
F	45	52	65	75	95	115	140	180	220
G (H14)	9	9	11	11	14	14	18	22	22
H	8	8	10	10	12	12	16	20	20
I	7	7	9	9	11	11	13	17	17
M	35	35	45	45	55	55	67	80	80
N (±0,2)	18	18	22	22	28	28	32	40	40
O	82	90	110	120	155	180	215	275	315
L5 - CNOMO	60	90	86	101	93	113	113	140	140
L5 - CETOP - ISO	78	90	86	101	104	113	136	140	150
L6 - CNOMO	123	162	166	186	192	220	224	270	270
L6 - CETOP - ISO	141	162	166	186	203	220	247	270	280
L7 - CNOMO	116	146	154	169	181	201	209	260	260
L7 - CETOP - ISO	134	146	154	169	192	201	232	260	270
L9 - CNOMO	95	134	132	152	148	176	176	210	210
L9 - CETOP - ISO	112	128	133	148	162	176	213	240	250
Weight gr.	80	90	190	210	460	600	1080	2400	3100

Front clevis

Ordering code

Front
1303.Ø.08F
(CNOMO)
1304.Ø.08F
(CETOP - ISO)

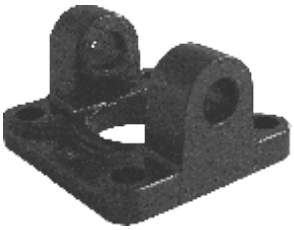

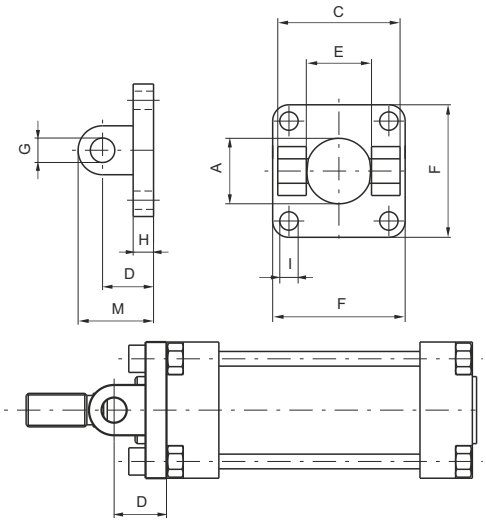

This type of mounting allows anchorage of the cylinder both parallel and at a right angle to the plane; the cylinder rod can oscillate and self-align as necessary. It is made of aluminium alloy and painted black.

Bore	32	40	50	63	80	100	125	160	200
A	25	32	32	45	45	55	55	65	65
C - CNOMO (H1)	45	52	65	75	95	115	140	180	220
C - CETOP - ISO (H14)	45	52	60	70	90	110	130	170	170
D - CNOMO (±0,2)	18	24	26	30	32	37	41	55	55
D - CETOP (±0,2)	20	22	25	30	32	37	46	55	55
E - CNOMO (H14)	26	33	33	47	47	57	57	72	72
E - CETOP (H14)	26	28	32	40	50	60	70	90	90
F	45	52	65	75	95	115	140	180	220
G - CNOMO (H9)	8	12	12	16	16	20	20	25	25
G - CETOP - ISO (H9)	10	12	12	16	16	20	25	30	30
H	8	8	10	10	12	12	16	19	19
I	7	7	9	9	11	11	13	17	17
M - CNOMO	26	36	38	46	48	57	61	80	80
M - CETOP - ISO	30	35	37	46	48	57	71	85	85
Weight gr.	55	60	120	145	325	510	900	2080	3100

Rear clevis complete with pin

Ordering code

Front
1303.Ø.09F
(CNOMO)
1304.Ø.09F
(CETOP - ISO)

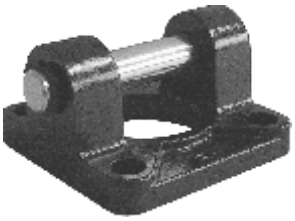

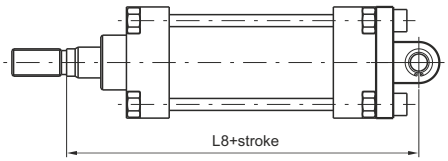

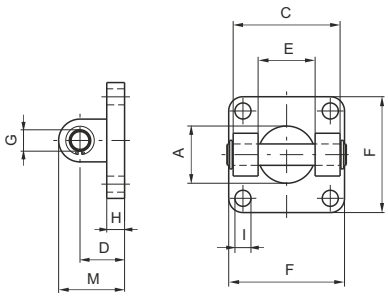

This type of mounting allows anchorage of the cylinder both parallel and at a right angle to the plane; the cylinder rod can oscillate and self-align as necessary. It is made of aluminium alloy and painted black.

Bore	32	40	50	63	80	100	125	160	200
A	25	32	32	45	45	55	55	65	65
C - CNOMO (H1)	45	52	65	75	95	115	140	180	220
C - CETOP - ISO (H14)	45	52	60	70	90	110	130	170	170
D - CNOMO (±0,2)	18	24	26	30	32	37	41	55	55
D - CETOP - ISO (±0,2)	20	22	25	30	32	37	46	55	55
E - CNOMO (H14)	26	33	33	47	47	57	57	72	72
E - CETOP (H14)	26	28	32	40	50	60	70	90	90
F	45	52	65	75	95	115	140	180	220
G - CNOMO (H9)	8	12	12	16	16	20	20	25	25
G - CETOP - ISO (H9)	10	12	12	16	16	20	25	30	30
H	8	8	10	10	12	12	16	19	19
I	7	7	9	9	11	11	13	17	17
M - CNOMO	26	36	38	46	48	57	61	80	80
M - CETOP - ISO	30	35	37	46	48	57	71	85	85
L8 - CNOMO	123	168	170	194	196	229	233	285	285
L8 - CETOP - ISO	142	160	170	190	210	230	275	315	335
Weight gr.	75	110	190	280	490	820	1270	2800	3900

Rear male clevis

Ordering code

1304.Ø.09/1F
(For CETOP-ISO cylinders May be used with CNOMO cylinders but is not specified in the standards)

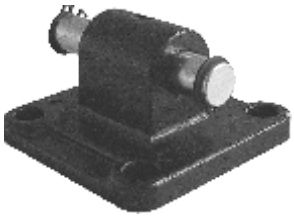

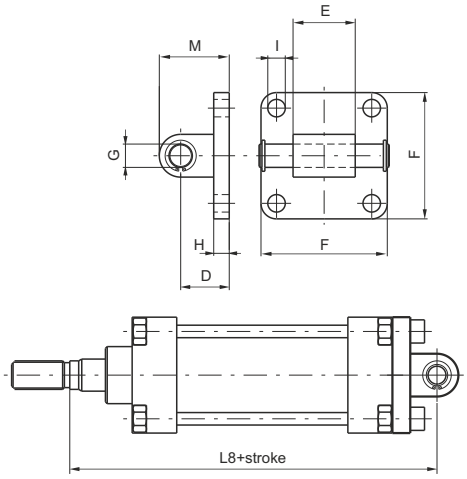

Similar to 09 clevis except for the connection, which is male rather than female. It can also be used as a counter clevis for type 10 (only CETOP - ISO). Allows mounting of cylinder at right angle to the plane of the cylinder rod.

Bore	32	40	50	63	80	100	125	160	200
D (±0,2)	20	22	25	30	32	37	46	55	55
E ($^{-0,2}_{-0,6}$)	26	28	32	40	50	60	70	90	90
F	45	52	65	75	95	115	140	180	220
G (H 9)	10	12	12	16	16	20	25	30	30
H	8	8	8	10	12	12	16	20	20
I	7	7	9	9	11	11	14	18	18
M	30	35	36	45	47	57	71	80	80
L8 - CNOMO	125	166	169	194	196	229	233	285	285
L8 - CETOP - ISO	142	160	170	190	210	230	275	315	335
Weight gr.	50	80	110	185	325	460	1300	2850	3980

Rear clevis bracket

Ordering code

1303.Ø.10F (CNOMO)
(May be used with CETOP - ISO cylinders but is not specified in the standard)

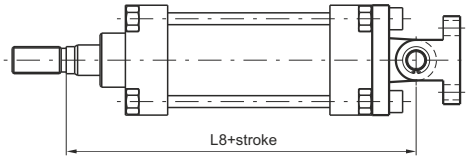

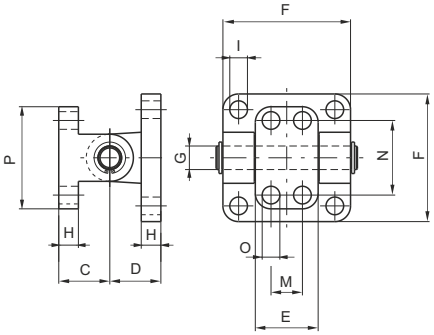

Mounting consists of clevis 09 and counter clevis. Used to mount cylinders at a right angle to the plane to which the counter clevis is attached. Allows self-alignment of the cylinder rod under load with an oscillation of ± 60 degrees.

Bore	32	40	50	63	80	100	125	160	200
C (±0,2)	18	26	26	34	34	41	41	55	55
D (±0,2)	18	24	26	30	32	37	41	55	55
E	25	32	32	46	46	56	56	71	71
F	45	52	65	75	95	115	140	180	220
G (H 9)	8	12	12	16	16	20	20	25	25
H	8	10	10	12	12	16	16	20	20
I	7	7	9	9	11	11	13	17	17
M (JS 14)	-	16	16	25	25	32	32	43	43
N (JS 14)	28	38	38	54	54	90	90	150	150
O (H 13)	7	9	9	11	11	14	14	18	18
P	40	52	52	75	75	115	115	180	180
L8 - CNOMO	123	168	170	194	196	229	233	285	285
L8 - CETOP - ISO	140	162	171	190	210	229	270	315	335
Weight gr.	90	165	240	470	665	1190	1660	3700	4700

Trunnion with support bracket

Ordering code

1303.Ø.11F
(CNOMO)
(May be used with CETOP - ISO cylinders but is not specified in the standards)

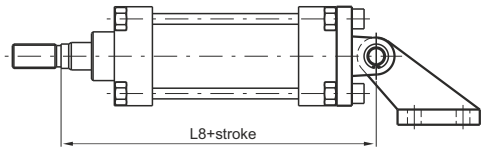

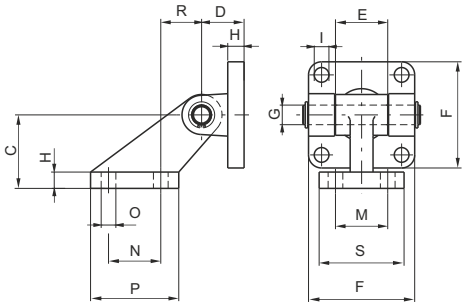

Bore	32	40	50	63	80	100	125	160	200
C (JS 15)	32	45	45	63	63	90	90	140	140
D (±0,2)	18	24	26	30	32	37	41	55	55
E	25	32	32	46	46	56	56	71	71
F	45	52	65	75	95	115	140	180	220
G (H9)	8	12	12	16	16	20	20	25	25
H	8	10	10	12	12	16	16	20	20
I	7	7	9	9	11	11	13	17	17
M (JS14)	25	32	32	40	40	50	50	63	63
N (Js14)	20	32	32	50	50	70	70	110	110
O (JS 13)	7	9	9	11	11	14	14	18	18
P	37	54	54	75	75	102	102	154	154
R	18	25	25	32	32	40	40	50	50
S	41	51	51	62	62	80	80	110	110
L8 - CNOMO	123	168	170	194	196	229	233	285	285
L8 - CETOP - ISO	140	162	171	190	210	229	270	315	335
Weight gr.	125	250	325	600	800	1570	2100	4600	5700

Mounting consists of clevis 09 and right angle counter clevis. Used to mount cylinders parallel to the plane to which the counterclevis is attached. Allows self-alignment of the cylinder rod under load with an oscillation up to 90 degrees from the mounting plane.

Intermediate trunnion

Ordering code

1300.Ø.12F

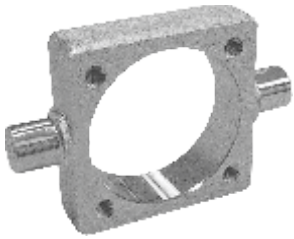

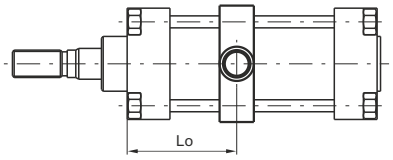

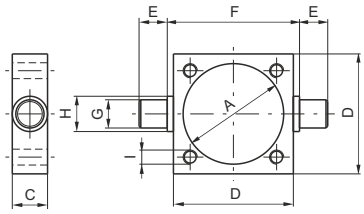

Bore	32	40	50	63	80	100	125	160	200
A	37	46	56	69	87	107	133	170	211
C	15	20	20	25	25	30	32	40	40
D	46	59	69	84	102	125	155	190	240
E (h 14)	12	16	16	20	20	25	25	32	32
F (h 14)	50	63	73	90	108	131	160	200	250
G (e 9)	12	16	16	20	20	25	25	32	32
H	15	20	20	25	25	30	30	40	40
I	M6	M6	M8	M8	M10	M10	M12	M16	M16
Lo min.	32	35	40	47	53	55	61	78	79
Lo max. +stroke - CNOMO	48	75	70	80	72	90	84	103	102
Lo max. + stroke - CETOP - ISO	67	75	70	80	84	90	107	103	112
Weight gr.	130	310	370	700	900	1590	2600	4300	7500

Clevis to be mounted between the endcaps of the cylinder allowing rotation at any point along the barrel. One piece construction from zinc-plated stamped steel. Can be mounted in fixed position or attached to adjustable tie rods.
NOTE: Lo max means at stroke 0.

Fork with pin

Ordering code

1300.Ø.13F (CNOMO)
1301.Ø.13F (CETOP)
1302.Ø.13F (ISO)

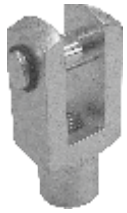

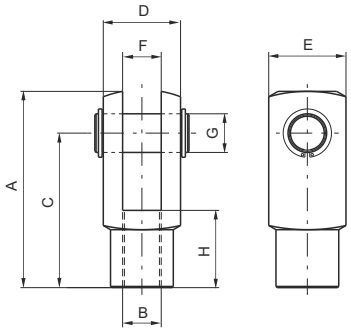

Male fork

Ordering code

1300.Ø.14F
(only for CNOMO cylinders)

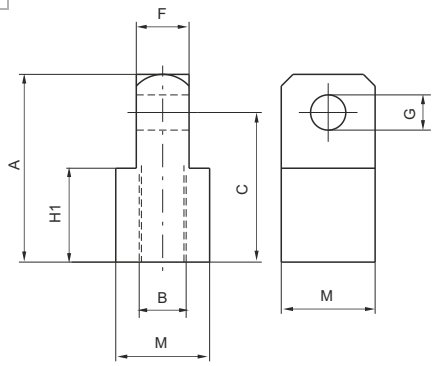

Fork with clips

Ordering code

1300.Ø.13/1F (CNOMO)
1301.Ø.13/1F (CETOP)
1302.Ø.13/1F (ISO)

from Ø32 to Ø100

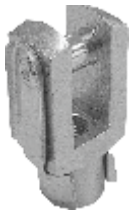

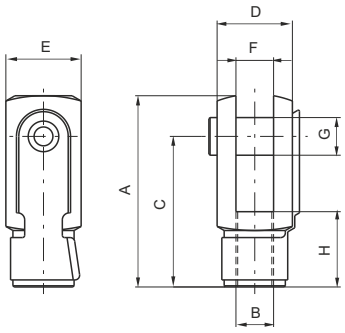

Rod lock nut

Ordering code

1300.Ø.18F (CNOMO)
1301.Ø.18F (CETOP)
1302.Ø.18F (ISO)

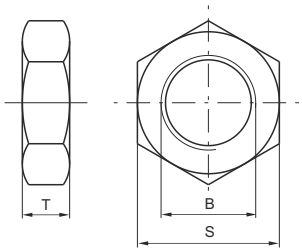

Bore		32	40	50	63	80	100	125	160	200
A - CNOMO		45	64	64	80	80	105	105	140	140
A - CETOP - ISO		51	62	82	82	105	105	132/148	188	188
B - CNOMO (6H)		M10x1,5	M16x1,5	M16x1,5	M20x1,5	M20x1,5	M27x2	M27x2	M36x2	M36x2
B - CETOP (6H)		M10x1,25	M12x1,25	M16x1,5	M16x1,5	M20x1,5	M20x1,5	M24x2	M36x2	M36x2
B - ISO (6 H)		M10x1,25	M12x1,25	M16x1,5	M16x1,5	M20x1,5	M20x1,5	M27x2	M36x2	M36x2
C - CNOMO		36	51	51	63	63	85	85	115	115
C - CETOP - ISO		40	48	64	65	80	80	100/100	144	144
D - CNOMO		22	36	36	45	45	63	63	80	80
D - CETOP - ISO		20	24	32	32	40	40	50/55	70	70
E - CNOMO		22	26	26	34	34	42	42	50	50
E - CETOP - ISO		20	24	32	32	40	40	50/55	70	70
F - CNOMO (H 14)		11	18	18	22	22	30	30	40	40
F - CETOP - ISO (B 12)		10	12	16	16	20	20	25/30	35	35
G - CNOMO (H 9)		8	12	12	16	16	20	20	25	25
G - CETOP - ISO (H 9)		10	12	16	16	20	20	25/30	35	35
H - CNOMO		20	26	26	30	30	45	45	75	75
H - CETOP - ISO		20	24	32	32	40	40	50/56	72	72
H1 - CNOMO		20	32	32	40	40	55	55	75	75
M		22	32	32	36	36	45	45	70	70
S - CNOMO		17	24	24	30	30	41	41	55	55
S - CETOP		17	19	24	24	30	30	36	55	55
S - ISO		17	19	24	24	30	30	41	55	55
T - CNOMO		6	8	8	9	9	12	12	18	18
T - CETOP		6	7	8	8	9	9	10	18	18
T - ISO		6	7	8	8	9	9	12	18	18
Weight gr.	Fork	90	150	350	350	680	680	2500	4000	4000
	Rod lock nut	10	20	20	35	35	80	80	210	210
	Male fork	110	30	330	500	500	1300	1300	3500	3500

Basic version

Ordering code

1315.Ø.stroke.01A
magnetic,aluminium barrel

Ø	BORE
	250 = 250 mm
	320 = 320 mm

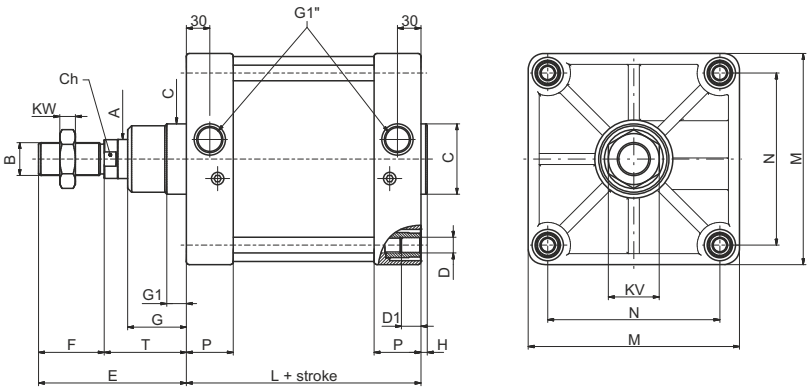

Table of dimensions

BORE	A	B	Ch	C	D	D1	E	F	G	G1	H	KW	KV	L	M	N	P	T	Weight gr.
250	Ø50	M42x2	46	Ø90	M20	25	189	84	75	25	8	21	Es64	200	270	220	60	105	28.170 (increase of 380 gr. each 10 mm stroke)
320	Ø63	M48x2	55	Ø110	M24	28	216	96	90	25	10	24	Es72	220	350	270	65	120	49.810 (increase of 616 gr. each 10 mm stroke)

Front and rear flanges

Ordering code

1315.Ø.03F
(Steel)

Ø	BORE
	250 = 250 mm
	320 = 320 mm

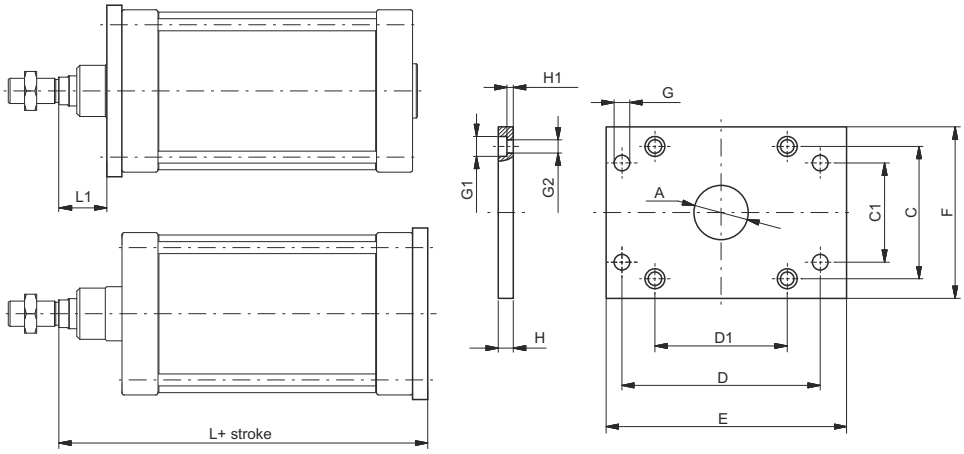

Table of dimensions

BORE	A(H11)	C	C1 (JS14)	D (JS14)	D1	E	F	G (H13)	G1 (H13)	G2 (H13)	H (±0,2)	H1 ($^{+0}_{-0,5}$)	L	L1	Weight gr.
250	90	220	165	330	220	400	285	26	33	22	25	10,5	330	80	20.150
320	110	270	200	400	270	470	350	33	39	26	30	15	370	90	34.000

Rear clevis complete with pin

Ordering code

1315.Ø.09F

Ø	BORE
	250 = 250 mm
	320 = 320 mm

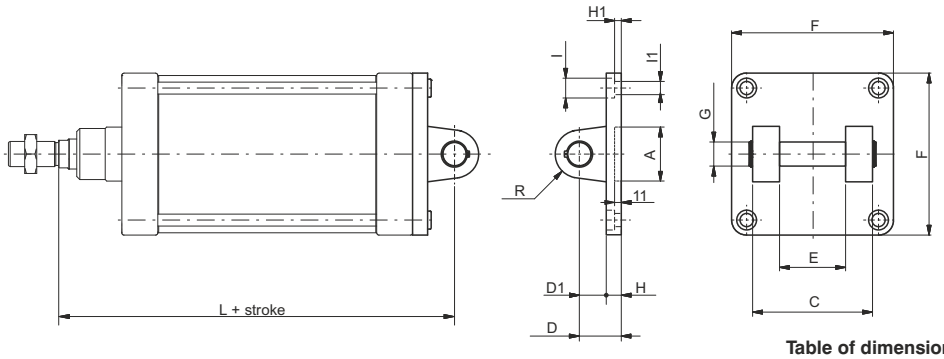

Table of dimensions

BORE	A	C (h14)	D (±0,2)	D1	E (H14)	F	G (H9)	H	H1	I	I1	L	R	Weight gr.
250	Ø90	200	70	45	110	270	40	25	11	33	22	375	40	7.800
320	Ø110	220	80	50	120	350	42,5	30	15	39	26	420	45	13.000

Rear male clevis

Ordering code

1315.Ø.09/1F

Ø	BORE
	250 = 250 mm
	320 = 320 mm

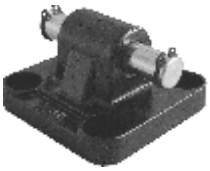

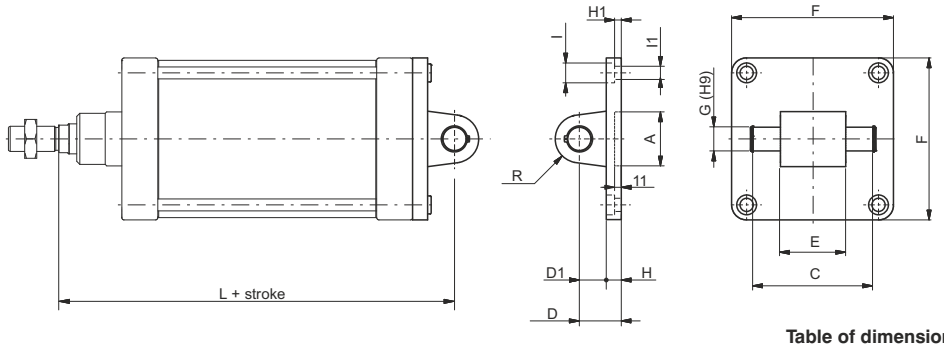

Table of dimensions

BORE	A	C ($^{+0.3}_{-0}$)	D (±0,2)	D1	E ($^{-0.5}_{-1.2}$)	F	G (H9)	H	H1	I	I1	L	R	Weight gr.
250	Ø90	202	70	45	110	270	40	25	11	33	22	375	40	8.300
320	Ø110	222	80	50	120	350	42,5	30	15	39	26	420	45	13.060

Intermediate trunnion

Ordering code	
1315.Ø.12F (Steel)	
Ø	**BORE**
	250 = 250 mm
	320 = 320 mm

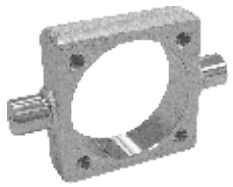

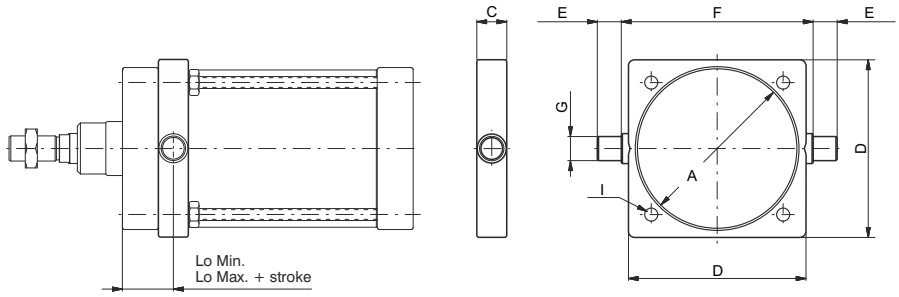

Table of dimensions

BORE	A	C	D	E (h14)	F (h14)	G (e9)	I	Lo Min.	Lo Max.	Weight gr.
250	Ø268	50	295	40	320	Ø40	Ø20,25	85	115 + stroke	10.500
320	Ø343	70	370	50	400	Ø50	Ø24,25	95	125 + stroke	25.300

Fork with pin

Ordering code	
1302.Ø.13F (Steel)	
Ø	**BORE**
	250 = 250 mm
	320 = 320 mm

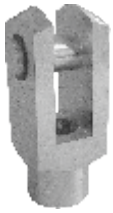

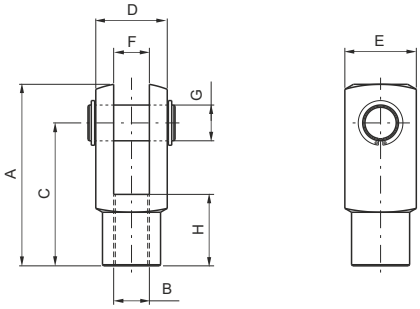

Table of dimensions

BORE	A	B	C	D	E	F	G	H	Weight gr.
250	188	M42x2 (H8)	144	70	70	35 (B12)	Ø35 (H9)	72	3.700
320	265	M48x2	192	96	96	50	Ø50	96	9.700

Rod lock nut

Ordering code	
1302.Ø.18F (Steel)	
Ø	**BORE**
	250 = 250 mm
	320 = 320 mm

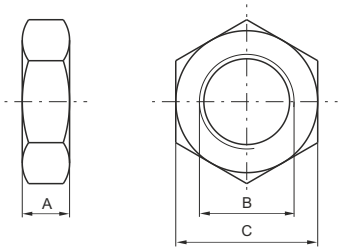

Table of dimensions

BORE	A	B	C	Weight gr.
250	21	M42x2	65	260
320	24	M48x2	72	580

Ball joint

Ordering code	
1302.Ø.32F (Steel)	
Ø	**BORE**
	250 = 250 mm
	320 = 320 mm

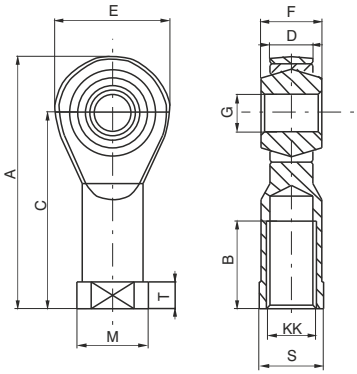

Table of dimensions

BORE	250	320
A	187	218
B	60	65
C	142	162
D (-0.1)	33	45
E	91	117
F	49	60
G (H 7)	40	50
KK	M42x2	M48x2
M	65	75
S	55	65
T	19	23
Weight gr.	2.400	5.000

Sensor bracket - codes 1500._,RS._,HS._

Ordering code
1306.D (Ø250)
1306.E (Ø320)

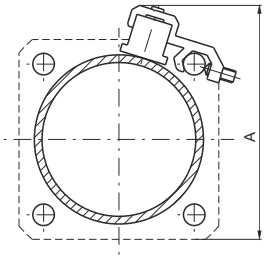

For technical characteristics and Sensors ordering code see Chapter 6 “magnetic sensors”

Table of dimensions

BORE	A
250	250
320	365

General

This series of pneumatic cylinders is manufactured according to ISO 6431 standards adapted to VDMA 24562 and CNOMO/AFNOR 49003 that guarantee the interchangeability of the cylinders even without mounted anchoring.

Construction characteristics

End plates	from Ø32 to Ø125: UNI 5079 aluminium alloy casting painted black by cataphoresis from Ø160 to Ø200: UNI 3051 aluminium chilled painted black by cataphoresis
Rod	stainlees steel or C43 chromed steel
Barrel	oxidised aluminium
Cushion bushings	hardened aluminium
Rod-guide bushing	self-lubricating sintered bronze
Piston	vulcanized rubber block on steel core with incorporated plastoferrite permanent magnet, or without magnet for non magnetic version (plus rear spacer).
Seals	standard: NBR Oil resistant rubber, PUR Piston rod and cushion seals (FPM seals available upon request)
Cushion adjustment screws	brass

Technical characteristics

Fluid	filtered and lubricated air									
Pressure	10 bar									
Operating temperature	-5 °C - +70 °C with standard seals (magnetic or non magnetic piston) -5 °C - +80 °C with FPM seals for 1319 and 1320 series (magnetic piston) -5 °C - +150 °C with FPM seals for 1321 series (non magnetic piston)									
Cushioning length	Ø	32	40	50	63	80	100	125	160	200
	mm	28	32	32	40	44	50	55	55	55

Please follow the suggestions below to ensure a long life for these cylinders:
- use clean and lubricated air
- correct alignment during assembly with regard to the applied load so as to avoid radial components or bending the rod.
- avoid high speeds together with long strokes and heavy loads: this would produce kinetic energy which the cylinder cannot absorb, especially if used as a limit stop (in this case use mechanical stop device)
- evaluate the environmental characteristics of cylinder used (high temperature, hard atmosphere, dust, humidity etc.)

Please note: air must be dried for applications with lower temperature.
Use hydraulic oils H class (ISO Vg32) for correct continued lubrication.
Our Technical Department will be glad to help.

Standard strokes (for all diameters)

from 0 to150, every 25 mm
over 150 up to 500, every 50 mm
over 500 up to 1000, every 100 mm

Stroke tolerance (ISO 15552)

Bore	Stroke	Tolerance
32 - 40 - 50	up to 500	+2 0
	over 500 up to 1250	+3.2 0
63 - 80 - 100	up to 500	+2.5 0
	over 500 up to 1250	+4 0
125 - 160 - 200	up to 500	+4 0
	over 500 up to 1250	+5 0

Minimum and maximum springs load (stroke 0 - 50mm)

Bore	Ø32	Ø40	Ø50 - Ø63	Ø80 - Ø100	Ø125
Min. load(N)	15	25	50	100	150
Max. load(N)	40	80	115	200	250

Basic version "01"

Ordering code
1319.Ø.stroke.01 magnetic chromed rod
1320.Ø.stroke.01 magnetic stainless steel rod
1321.Ø.stroke.01 non magnetic chromed rod
13– –.Ø.stroke.01V FPM seals
13– –.Ø.stroke.01MA Front springs (Ø32-Ø125)*
13– –.Ø.stroke.01MP Rear springs (Ø32-Ø125)*

* Max. stroke 50

This is the configuration that represents the basic cylinder according to ISO-VDMA standards. It can be directly anchored on machine parts using the four thread on the end cover. For other applications see the following pages where different types of attachments are shown.

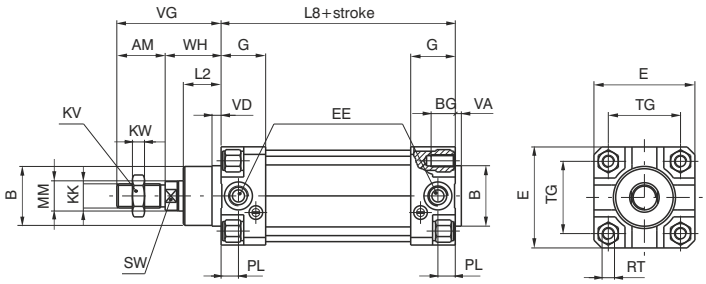

Push/Pull version "02"

Ordering code
1319.Ø.stroke.02 magnetic chromed rod
1320.Ø.stroke.02 magnetic stainless steel rod
1321.Ø.stroke.02 non magnetic chromed rod
13– –.Ø.stroke.02V FPM seals

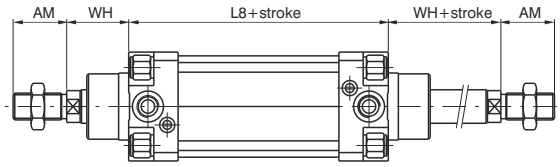

Tandem push with a common rods “G”

Ordering code
1319.Ø.stroke.G magnetic chromed rod
1320.Ø.stroke.G magnetic stainless steel rod
1321.Ø.stroke.G non magnetic chromed rod

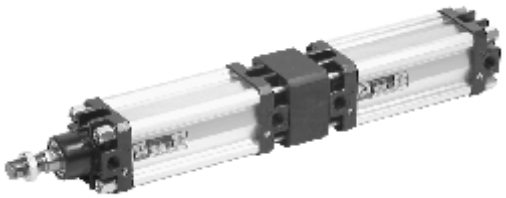

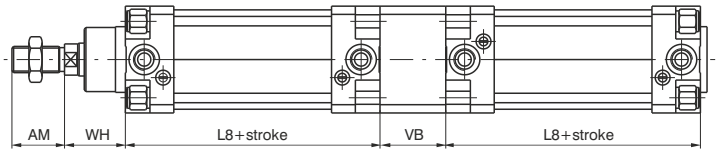

Tandem push with independent rods”F”

Ordering code
1319.Ø.stroke.stroke1.F magnetic chromed rod
1320.Ø.stroke.stroke1.F magnetic stainless steel rod
1321.Ø.stroke.stroke1.F non magnetic chromed rod

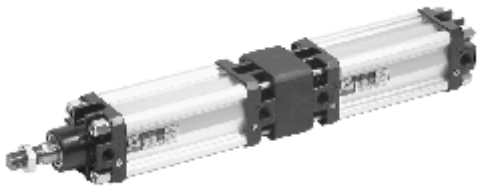

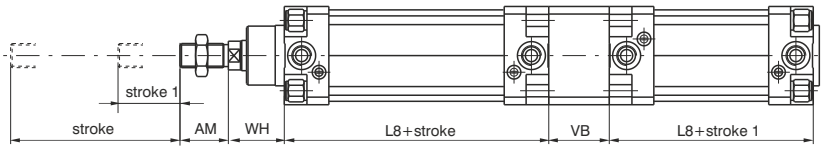

Opposed tandem with common rod "D"

Ordering code
1319.Ø.stroke.stroke1.D magnetic chromed rod
1320.Ø.stroke.stroke1.D magnetic stainless steel rod
1321.Ø.stroke.stroke1.D non magnetic chromed rod

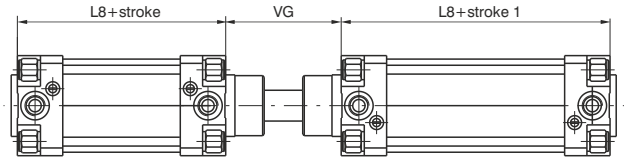

Tandem with opposed rods "E"

Ordering code
1319.Ø.stroke.stroke1.E magnetic chromed rod
1320.Ø.stroke.stroke1.E magnetic stainless steel rod
1321.Ø.stroke.stroke1.E non magnetic chromed rod

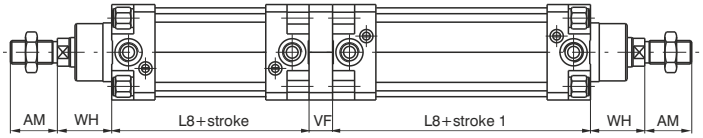

Table of dimensions

Bore		32	40	50	63	80	100	125	160	200
AM		22	24	32	32	40	40	54	72	72
B (d 11)		30	35	40	45	45	55	60	65	75
BG		14	14	16	16	21	21	23	24	24
E		46	52	65	75	95	115	140	180	220
EE		G 1/8"	G 1/4"	G 1/4"	G 3/8"	G 3/8"	G 1/2"	G 1/2"	G 3/4"	G 3/4"
G		25	29	29,5	36	36	40	45	49	49
KK		M10X1,25	M12X1,25	M16x1,5	M16x1,5	M20x1,5	M20x1,5	M27x2	M36x2	M36x2
KV		17	19	24	24	30	30	41	55	55
KW		6	7	8	8	9	9	12	18	18
L2		16	20	25	25	32	35	45	50	60
L8 *		94	105	106	121	128	138	160	180	180
MM		12	16	20	20	25	25	32	40	40
PL		9	11,5	13	14	16	18	19	24	25
RT		M6	M6	M8	M8	M10	M10	M12	M16	M16
SW		10	13	17	17	22	22	27	32	32
TG		32,5	38	46,5	56,5	72	89	110	140	175
VA		4	4	4	4	4	4	6	5	5
VB		25	30	40	40	50	50	75	70	75
VD		5	6	6	6	10	10	12	10	10
VF		12	12	16	16	20	20	25	30	30
VG		48	54	69	69	86	91	119	152	167
WH		26	30	37	37	46	51	65	80	95
Weight	Stroke 0	480	730	1150	1600	2800	3600	7800	15000	21500
gr.	every 10 mm	25	32	56	60	90	100	140	265	325

* For strokes over 50mm, the length does not increase proportionally to the stroke, and allowance must be made for adequate spring allocation (see table of L8 dimensions).

"L8" dimensions for "rear spring" and "front spring"

Bore	32	40	50	63	80	100	125
L8 (Stroke 51 - 100)	134	150	151	166	183	193	230
L8 (Stroke 101 - 150)	174	195	196	211	238	248	300
L8 (Stroke 151 - 200)	214	240	241	256	293	303	370

Construction characteristics

Front cover	anodised aluminium
Rear cover	UNI 5079 aluminium alloy casting
Rod	C43 chromed steel stainless steel
Barrel	RA=0.3-0.5 anodised aluminium
Cushion bushings	hard aluminium
Piston	vulcanized rubber block on steel core with incorporated permanent magnet, or without magnet for non magnetic version (plus spacer).
Flange	zinc plated steel
Rod seal	PUR
Other seals	NBR 80 shore rubbber
Cushioning adjustment screw	nickel-plated steel

Technical characteristics

Fluid	filtered and lubricated air
Max. pressure	10 bar
Working temperature	-5°C - +70°C

Please follow the suggestions below to ensure a long life for these cylinders:
- use clean and lubricated air
- correct alignment during assembly with regard to the applied load so as to avoid radial components or bending the rod.
- avoid high speeds together with long strokes and heavy loads: this would produce kinetic energy which the cylinder cannot absorb, especially if used as a limit stop (in this case use mechanical stop device)
- evaluate the environmental characteristics of cylinder used (high temperature, hard atmosphere, dust, humidity etc.)

Please note: air must be dried for applications with lower temperature.
Use hydraulic oils H class (ISO Vg32) for correct continued lubrication.
Our Technical Department will be glad to help.

4

Cushioning lengths

Bore	Ø	32	40	50	63	80	100
Front length	mm	22	22	24	32	32	32
Rear length	mm	28	32	32	40	44	50

Standard strokes

Ø32 25 - 50 - 75 - 100 - 150 - 200 mm
Ø40 25 - 50 - 75 - 100 - 150 - 200 - 250 mm
Ø50 25 - 50 - 75 - 100 - 150 - 200 - 250 - 300 mm
Ø63 25 - 50 - 75 - 100 - 150 - 200 - 250 - 300 - 350 mm
Ø80 25 - 50 - 75 - 100 - 150 - 200 - 250 - 300 - 350 - 400 - 500 mm
Ø100 25 - 50 - 75 - 100 - 150 - 200 - 250 - 300 - 350 - 400 - 500 mm

Stroke tolerance (ISO 15552)

Bore	Stroke	Tolerance
32 - 40 - 50 63 - 80 - 100	up to 500 mm	+2 0

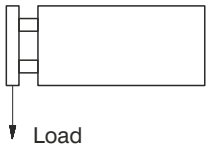

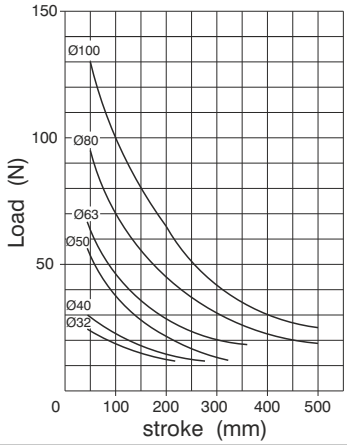

Basic version

Ordering code
1325.Ø.stroke.01 magnetic **1326.Ø.stroke.01** non magnetic **1325.Ø.stroke.01X** magnetic stainless steel rod **1326.Ø.stroke.01X** non magnetic stainless steel rod

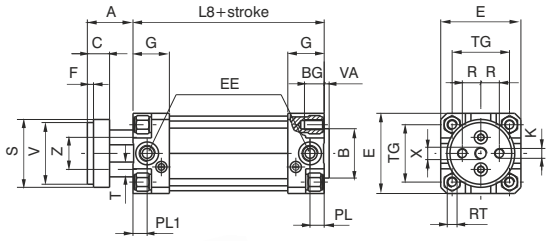

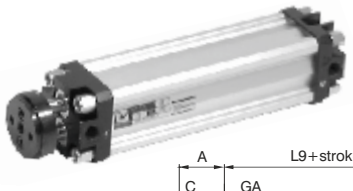

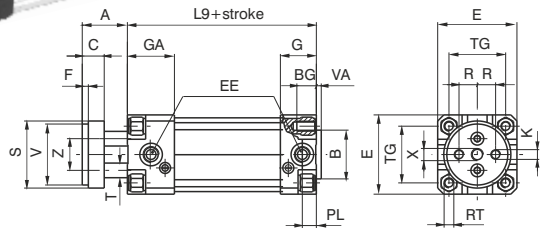

Alesaggio			32	40	50	63	80	100
A			26	30	37	37	46	51
AM			22	24	32	32	40	40
B			30	35	40	45	45	55
BG			12	12	16	16	20	20
C			15	15	18	22	22	22
E			46	52	65	75	95	115
EE			G 1/8"	G 1/4"	G 1/4"	G 3/8"	G 3/8"	G 1/2"
F			4	4	5	5	5	5
G			25	29	29,5	36	36	40
GA			50	54	54,5	61	61	65
K			M6	M8	M8	M10	M12	M12
L8			94	105	106	121	128	138
L9			119	130	131	146	153	163
PL			9	11,5	13	14	16	18
PL1			9,5	11	10,5	14	13	15
R			9,5	11,25	15	19	25	35
RT			M6	M6	M8	M8	M10	M10
S			35	45	55	70	85	105
T			8	10	12	16	20	20
TG			32,5	38	46,5	56,5	72	89
V			32	40	50	63	80	100
VA			4	4	4	4	4	4
Z			18	22	26	35	40	50
WH			26	30	37	37	46	51
X			M8	M10	M10	M12	M14	M14
Weight	Stroke	Basic version	560	810	1380	2300	3680	5740
gr.	0	Extended ver.	650	950	1500	2500	4100	6300
every 10 mm			20	26	30	40	80	90

Extended front cover

1345.Ø.stroke.01 magnetic
1347.Ø.stroke.01 non magnetic
1345.Ø.stroke.01X magnetic stainless steel rod
1347.Ø.stroke.01X non magnetic stainless steel rod

Push-pull rod version with ISO standard

Ordering code	
1325.Ø.stroke.02	magnetic
1326.Ø.stroke.02	non magnetic

Ordering code	
1325.Ø.stroke.02X	magnetic stainless steel rod
1326.Ø.stroke.02X	non magnetic stainless steel rod

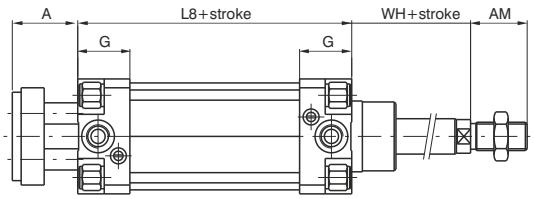

Twin rods push-pull version

Ordering code	
1325.Ø.stroke.06	magnetic
1326.Ø.stroke.06	non magnetic

Ordering code	
1325.Ø.stroke.06X	magnetic stainless steel rod
1326.Ø.stroke.06X	non magnetic stainless steel rod

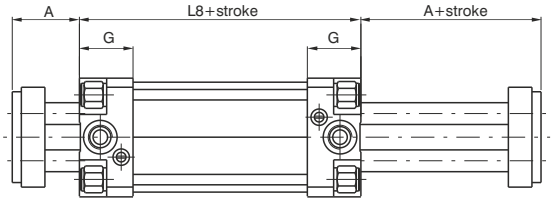

Magnetic sensors

For sensor and sensor support bracket please refer to the 1319 and 1320 series.

Accessories

All of the attachments of the ISO 15552 can be mounted, with the exclusion of the front flange and the foot mounting bracket that, although they are part of the same series, need a small adjustment in the exit zone of the rods. For these there is a different code and the dimensions are indicated below.

Threaded Nipple

Ordering code
1325.Ø.17F

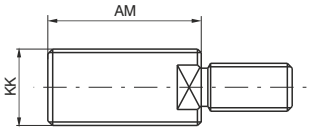

Bore	32	40	50	63	80	100
AM	22	24	32	35	40	40
KK	M10x1,25	M12x1,25	M16x1,5	M16x1,5	M20x1,5	M20x1,5
Weight gr.	17	27	63	65	110	110

Front flange

Ordering code
1325.Ø.03F

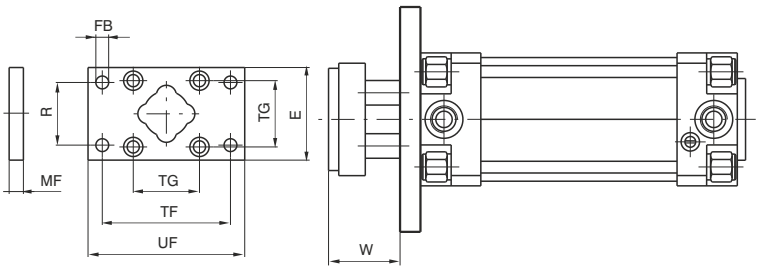

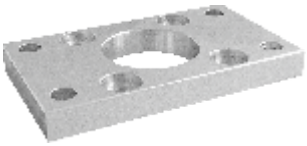

Bore	32	40	50	63	80	100
E	45	52	65	75	95	115
FB (H13)	7	9	9	9	12	14
MF (JS 14)	10	10	12	12	16	16
R (JS 14)	32	36	45	50	63	75
TF (JS 14)	64	72	90	100	126	150
TG	32,5	38	46,5	56,5	72	89
UF	80	90	110	120	150	170
W	16	20	25	25	30	35
Weight gr.	160	250	480	620	1430	3500

Front foot mounting bracket (short)

Ordering code
1325.Ø.05/1F (1 piece)

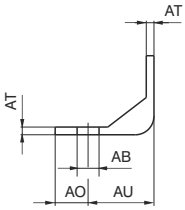

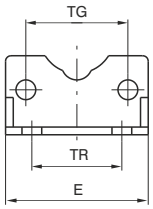

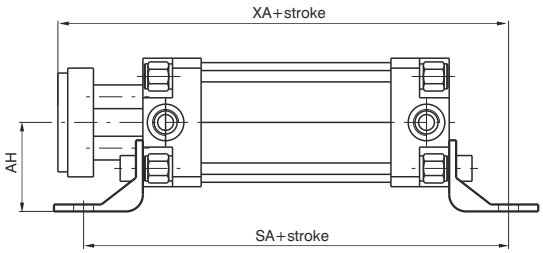

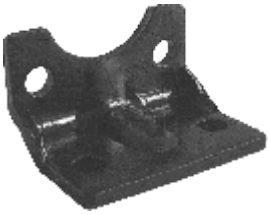

Bore	32	40	50	63	80	100
AB (H14)	7	9	9	9	12	14
AH (JS 15)	32	36	45	50	63	71
AO (± 0,2)	11	8	13	13	14	15
AT	3,5	3,5	3,5	4,5	5	5
AU	24	28	32	32	41	41
E	45	52	65	75	95	115
SA	142	161	170	185	210	220
TG	32,5	38	46,5	56,5	72	89
TR (JS 14)	32	36	45	50	63	75
XA	144	163	175	190	215	230
Weight gr.	50	70	120	180	320	400

Construction characteristics

End plates	UNI 5079 aluminium alloy casting painted black by cataphoresis
Rod	C43 chromed steel Ra = 0.2
Barrel	UNI 9006/1 aluminium alloy square section, hardened 30 micron oxidate
Cushion bushings	2011 UNI 9002/5 hardened alloy aluminium
Piston	polyacetal resin, self-lubricated and anti-wear, with plastoferrite rings in magnetic version
Piston seals	NBR oil-resistant rubber, PUR Piston rod and cushion seals
Cushioning adjustement screw	brass

Technical characteristics

Fluid	filtered and lubricated air
Pressure	10 bar
Operating temperature	-5°C - +70°C

Please follow the suggestions below to ensure a long life for these cylinders:
- use clean and lubricated air
- correct alignment during assembly with regard to the applied load so as to avoid radial components or bending the rod.
- avoid high speeds together with long strokes and heavy loads: this would produce kinetic energy which the cylinder cannot absorb, especially if used as a limit stop (in this case use mechanical stop device)
- evaluate the environmental characteristics of cylinder used (high temperature, hard atmosphere, dust, humidity etc.)

Please note: air must be dried for applications with lower temperature.
Use hydraulic oils H class (ISO Vg32) for correct continued lubrication.
Our Technical Department will be glad to help.

4

Bore	Usable surface (square profile) cm²	Max couple on the rod (max torque) Nm	Grade precision (rest rod, without load) anti-rotation	Cushion length mm.
32	8.31	0.5	12'	22
40	12.41	0.8	12'	27
50	18.41	1.1	12'	27
63	29.67	1.5	12'	32

Standard strokes (for all diameters)

from 0 to150, every 25 mm
Other stroke for these following bores:
Ø 32 80 mm **Ø 40** 80 - 160 mm **Ø 50** 80 - 160 - 200 - 250 mm **Ø 63** 80 - 160 - 200 - 300 - 320 mm

Stroke Tolerance (ISO 15552)

Bore	Stroke	Tolerance
32 - 40 - 50 - 63	up to 500	$^{+2}_{0}$

Basic version

Ordering code

1348.Ø.stroke.01
magnetic chromed rod
1349.Ø.stroke.01
magnetic stainless steel rod
1350.Ø.stroke.01
non-magnetic chromed rod

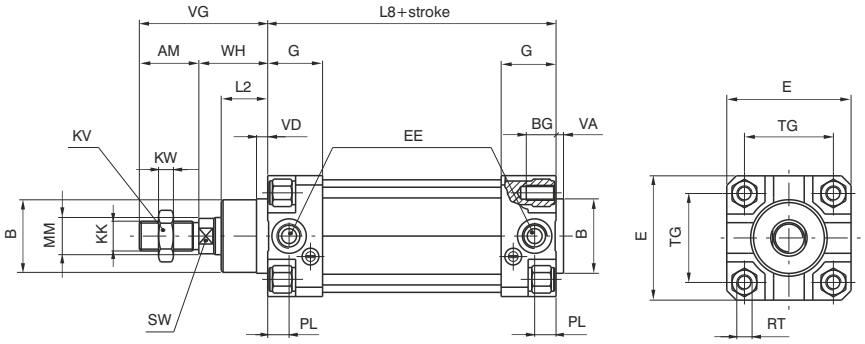

Bore		32	40	50	63
AM		22	24	32	32
B (d 11)		30	35	40	45
BG		12	12	16	16
E		46	52	65	75
EE		G 1/8"	G 1/4"	G 1/4"	G 3/8"
G		25	29	29.5	36
KK		M10x1.25	M12x1.25	M16x1.5	M16x1.5
KV		17	19	24	24
KW		6	7	8	8
L 2		16	20	25	25
L 8		94	105	106	121
MM		12	16	20	20
PL		9	11.5	13	14
RT		M6	M6	M8	M8
SW		10	13	17	17
TG		32.5	38	46.5	56.5
VA		4	4	4	4
VD		5	6	6	6
VG		48	54	69	69
WH		26	30	37	37
Weight	stroke 0	505	705	1320	1710
gr.	every 10 mm	24	33	53	58

This is the configuartion that represents the basic cylinder according to ISO standards. It can be directly anchored on machine parts using the four threads on the end cover. For other applications see the following pages where different types of attachments shown.

Push/pull version

Ordering code

1348.Ø.stroke.02
magnetic chromed rod
1349.Ø.stroke.02
magnetic stainless steel rod
1350.Ø.stroke.02
non-magnetic chromed rod

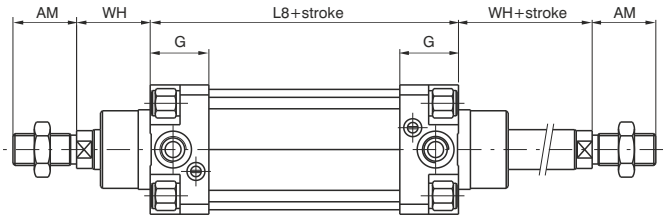

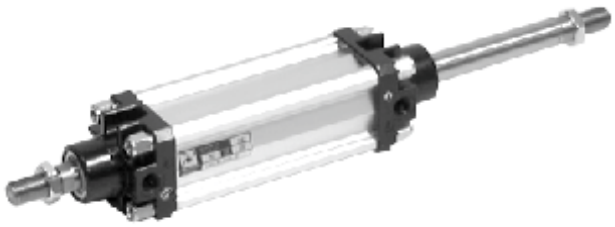

Construction characteristics

Cover plates	UNI 5079 aluminium alloy casting
Central body	oxidised aluminium
Pinion	18 NiCrMo4 cemented and tempered
Rack	C43
Barrel	anodised aluminium Ra=0.3-0.5
Sliding shoe	acetal resin
Cushion bushings	hardened aluminium
Piston	vulcanized rubber block on steel core with incorporated permanent magnet or without magnet plus rear spacer for non magnetic version
Seals	NBR 80 shore rubber
Cushion adjustment screw	nickel plated steel
Rotating angle adjustment assy	nickel plated brass

Technical characteristics

Fluid	filtered and preferably lubricated air
Max. pressure	10 bar
Working temperature	-5°C- +70°C
Standard rotation	90° - 180° - 270° - 360°(+1°)
Rotating angle adjustment assy	±10°

Please follow the suggestions below to ensure a long life for these cylinders:
- use clean and lubricated air
- correct alignment during assembly with regard to the applied load so as to avoid radial components or bending the rod.
- avoid high speeds together with long strokes and heavy loads: this would produce kinetic energy which the cylinder cannot absorb, especially if used as a limit stop (in this case use mechanical stop device)
- evaluate the environmental characteristics of cylinder used (high temperature, hard atmosphere, dust, humidity etc.)

Please note: air must be dried for applications with lower temperature.
Use hydraulic oils H class (ISO Vg32) for correct continued lubrication.
Our Technical Department will be glad to help.

Bore	32	40	50	63	80	100
Torque moments Nm/bar	0.9	1.7	2.9	5.55	13.2	23.8
Axis load max. kg.	8	10	10	12	18	22
Cushioning angle	60°	60°	50°	50°	40°	40°

Female pinion version

Ordering code

1330.Ø.*.01
magnetic
1331.Ø.*.01
non magnetic
1330.Ø.*.01R
magnetic with rotating adjustment angle
1331.Ø.*.01R
non magnetic with rotating adjustment angle
* = rotating angle

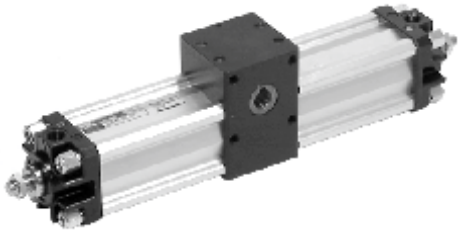

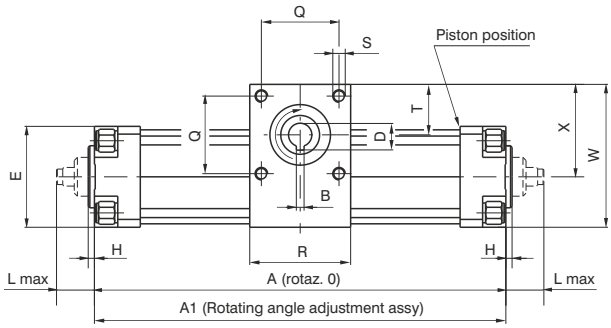

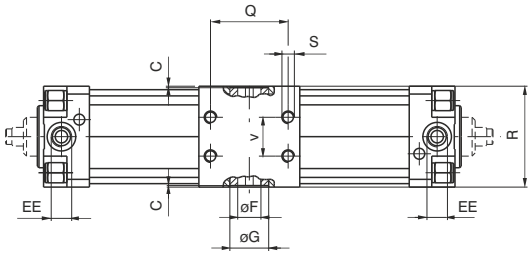

Male pinion version

Ordering code

1332.Ø.*.01
magnetic
1333.Ø.*.01
non magnetic
1332.Ø.*.01R
magnetic with rotating adjustment angle
1333.Ø.*.01R
non magnetic with rotating adjustment angle
* = rotating angle

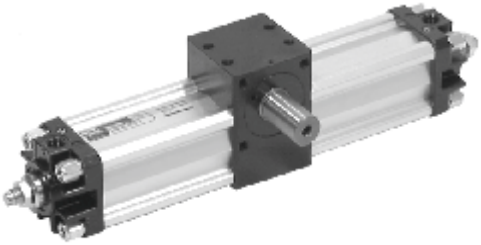

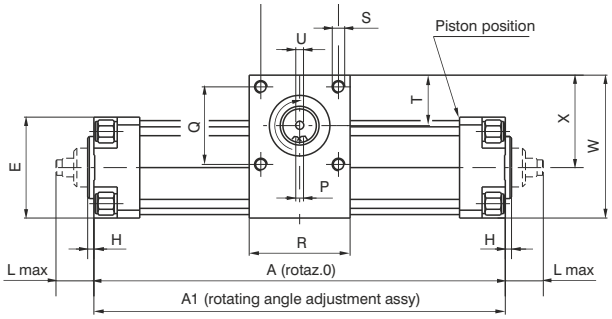

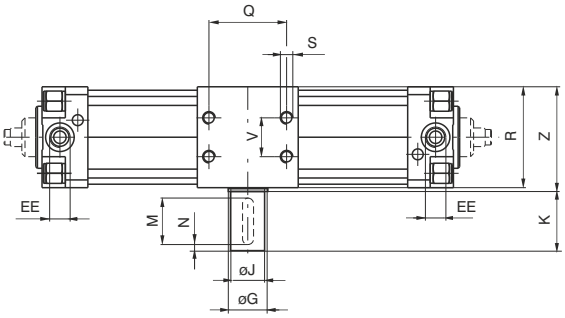

4

Dimensions

Bore		32	40	50	63	80	100
A rot. 0°		171	195	202	233	268	300
A rot. 90°		218	252	265	308	378	427
A rot. 180°		265	308	328	382	488	555
A rot. 270°		312	364	390	457	598	682
A rot. 360°		359	421	453	531	708	809
A1 rot. 0°		174	198	206	237	274	307
A1rot. 90°		221	255	269	312	384	434
A1 rot. 180°		268	311	332	386	494	562
A1 rot. 270°		315	367	394	461	604	689
A1 rot. 360°		362	424	457	535	714	816
B		5	5	5	6	6	8
C		1	1	1	1	1	1
D		17.3	17.3	17.3	20.8	22.8	28.3
E		46	52	65	75	95	115
Ø F (H 7)		15	15	15	18	20	25
Ø G		25	25	25	30	40	55
H		4	4	4	4	4	4
Ø J (h 7)		14	14	22	25	30	35
K		30	30	40	40	50	50
L max.		23	23	28.5	28.5	34.5	34.5
M		25	25	35	35	45	45
N		2.5	2.5	2.5	2,5	2.5	2.5
P		5	5	6	8	8	10
Q		33	40	50	60	80	80
R		50	60	65	75	100	115
S		M6	M6	M8	M8	M10	M10
T		27.5	35	32.5	35.5	50	54.5
U		M5	M5	M6	M8	M8	M10
V		18	22	25	35	50	60
W		71	85	92	105	141	162
X		48	59	59.5	67.5	93.5	104.5
Z		51	61	66	76	101	116
EE		G 1/8"	G 1/4"	G 1/4"	G 3/8"	G 3/8"	G 1/2"
Piston stroke every 10 °of rotation		2.61	3.14	3.49	4.14	6.11	7.07
Female Pinion weight gr.	rot. 90°	1450	2020	3050	4850	10000	14900
	rot. 180°	1600	2240	3350	5350	11000	16350
	rot. 270°	1750	2460	3650	5850	12000	17800
	rot. 360°	1900	2680	3950	6350	13000	19250
Male Pinion weight gr.	rot. 90°	1550	2150	3280	5150	10500	15700
	rot. 180°	1700	2370	3580	5650	11500	17150
	rot. 270°	1850	2590	3880	6150	12500	18600
	rot. 360°	2000	2810	4180	6650	13500	20050

Magnetic sensors

Sensors 1500._, RS._, HS._ series
Mounting brackets codes 1320._(A, B, C)

Sensor brackets

Sensor brackets codes 1500._, RS._, HS._	Sensor brackets codes 1595.HAP	Bore	L
Code	Code		
1320.A	1320.ASC	Ø32	60
		Ø40	65
1320.B	1320.BSC	Ø50	77
		Ø63	87
1320.C	1320.CSC	Ø80	105
		Ø100	125
1320.D	1320.DSC	Ø125	145
1320.E	1320.ESC	Ø160	184
1320.F	1320.FSC	Ø200	222

Sensor brackets codes 1580._, MRS._, MHS._		
Code	Bore	L1
1320.AS	Ø32	48
	Ø40	54
1320.BS	Ø50	66
	Ø63	76
1320.CS	Ø80	96
	Ø100	112
1320.DSC	Ø125	145
1320.ESC	Ø160	184
1320.FSC	Ø200	222

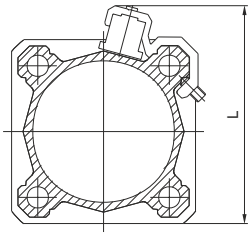

Sensors 1500._,RS._,HS._

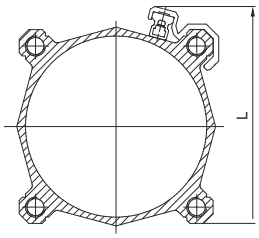

Sensors 1595.HAP

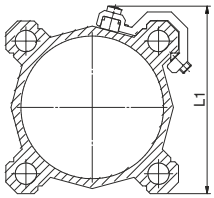

Sensors 1580._, MRS._, MHS._

Sensors for microcylinders: for technical characteristics and ordering codes see Chapter 6 "Magnetic sensors"

Distributor supports

This accessory permits to mount a valve or an electrovalve on a side of the cylinder. The plate can be fitted on the cylinder profiled barrel, and, on it, can be mounted either a threaded distributor or a base on whic can be mounted an ISO distributor. Once installed the connections must be done with fittings and pipes. All of the threaded holes on the support plate are dedicated to different valves series as per attached drawing.

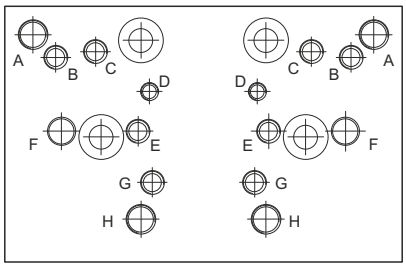

Fixing holes for valves series:

A = 414/2
B = 824
C = 828, T488, 488, 484
D = 2400
E = 2600
F = Bases for ISO distributors
G = 858/2
H = T424

Ordering code	
1320.15	(Ø32 - Ø40)
1320.16	(Ø50 - Ø63)
1320.17	(Ø80 - Ø100)
1320.18	(Ø125)
1320.19	(Ø160)
1320.20	(Ø200)

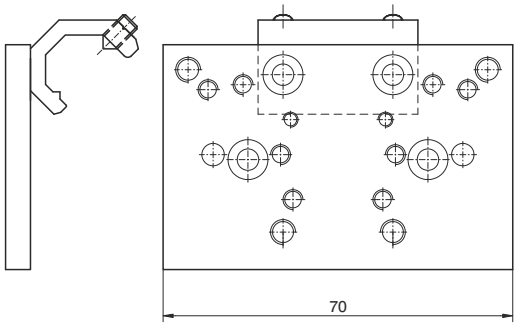

Bases for ISO distributors

Ordering code	
1320.21	bases for ISO 1 electrodistributor
1320.22	bases for ISO 2 electrodistributor

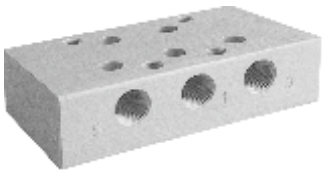

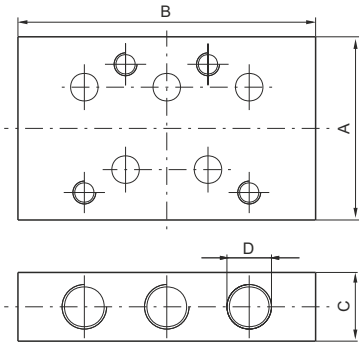

		Dimensions			
		A	B	C	D
1320.21	bases for ISO 1 electrodistributor	40	75	15	G 1/8"
1320.22	bases for ISO 2 electrodistributor	50	95	20	G 1/4"

General

Profiled tube has two "T" slots on the three sides hosting sensors 1580._, MRS._, MHS._. without adaptors.

Construction characteristics

End plates	Series 1386 - 1388: high resistant thermoplastic material	Series 1396 - 1398: Die-casting aluminium
Rod	C43 chromed steel or stainless steel	
Barrel	anodised aluminium alloy	
Rod-guide bushing	self-lubricating sintered bronze	
Piston	acetal resin, aluminium on request	
Seal	standard: NBR Oil resistant rubber, PUR Piston rod seals (PUR seals available upon request)	
Cushion adjusting screws	brass	

Technical characteristics

Fluid	filtered and preferably lubricated air or not (If lubricated the lubrication must be continuous)											
Max. pressure	10 bar											
Operating temperature	-5°C - +70°C with standard seals -30°C - +80°C with PUR seals											
Bore	Ø	32	-	40	-	50	-	63	-	80	-	100
Cushioning lenght	mm	27	-	31	-	31	-	37	-	40	-	44
Cushioning lenght "K" and "PK" version	mm	20	-	20	-	22	-	22	-	32	-	32

Please follow the suggestions below to ensure a long life for these cylinders:
- use clean and lubricated air
- correct alignment during assembly with regard to the applied load so as to avoid radial components or bending the rod;
- avoid high speeds together with long strokes and heavy loads: this would produce kinetic energy which the cylinder cannot absorb, especially if used as a limit stop (in this case use mechanical stop device and aluminium piston);
- evaluate the environmental characteristics of cylinder used (high temperature, hard atmosphere, dust, humidity etc.)

Please note: air must be dried for applications with lower temperature.
Use hydraulic oils H class (ISO VG32) for correct continued lubrication.
Our Technical Department will be glad to help.

Standard strokes (for all diameters)

from 0 to 150, every 25 mm
from 150 to 500, every 50 mm
from 500 to 1000, every 100

Stroke tolerance (ISO 15552)

Bore	Stroke	Tolerance
32 - 40 - 50	up to 500	+2 0
	over 500 up to 1000	+3.2 0
63 - 80 - 100	up to 500	+2.5 0
	over 500 up to 1000	+4 0

Basic version “01”

Ordering code
TECHNOPOLYMER COVERS
1386.Ø.stroke.01 Magnetic chromed rod
1387.Ø.stroke.01 Magnetic stainless steel rod
1388.Ø.stroke.01 Non magnetic chromed rod
ALUMINIUM COVERS
1396.Ø.stroke.01 Magnetic chromed rod
1397.Ø.stroke.01 Magnetic stainless steel rod
1398.Ø.stroke.01 Non magnetic chromed rod

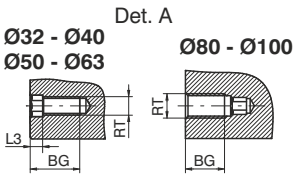

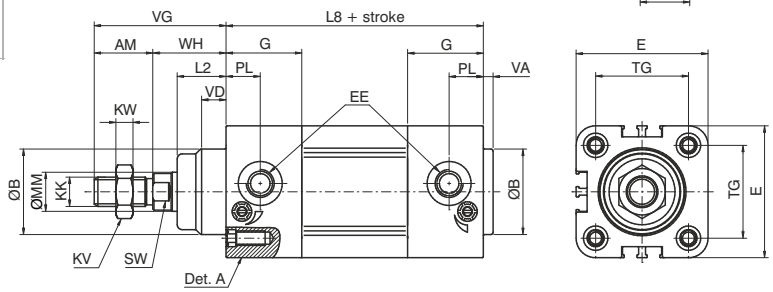

Push/pull version “02”

Ordering code
TECHNOPOLYMER COVERS
1386.Ø.stroke.02 Magnetic chromed rod
1387.Ø.stroke.02 Magnetic stainless steel rod
1388.Ø.stroke.02 Non magnetic chromed rod
ALUMINIUM COVERS
1396.Ø.stroke.02 Magnetic chromed rod
1397.Ø.stroke.02 Magnetic stainless steel rod
1398.Ø.stroke.02 Non magnetic chromed rod

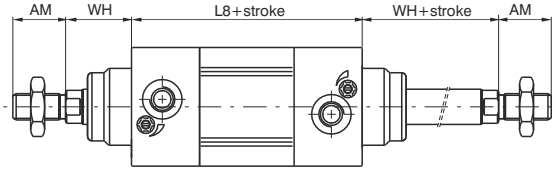

Tandem push with common rods “G”

Ordering code
TECHNOPOLYMER COVERS
1386.Ø.stroke.G Magnetic chromed rod
1387.Ø.stroke.G Magnetic stainless steel rod
1388.Ø.stroke.G Non magnetic chromed rod
ALUMINIUM COVERS
1396.Ø.stroke.G Magnetic chromed rod
1397.Ø.stroke.G Magnetic stainless steel rod
1398.Ø.stroke.G Non magnetic chromed rod

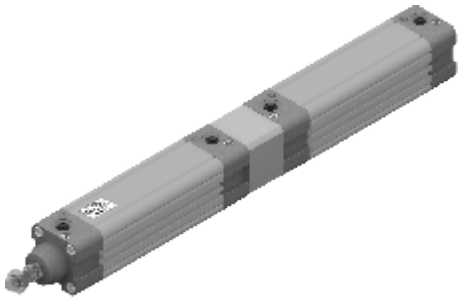

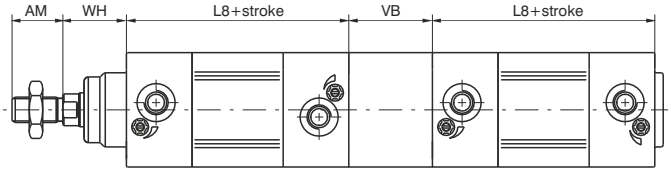

Tandem push with independent rods “F”

Ordering code
TECHNOPOLYMER COVERS
1386.Ø.stroke.stroke1.F Magnetic chromed rod
1387.Ø.stroke.stroke1.F Magnetic stainless steel rod
1388.Ø.stroke.stroke1.F Non magnetic chromed rod
ALUMINIUM COVERS
1396.Ø.stroke.stroke1.F Magnetic chromed rod
1397.Ø.stroke.stroke1.F Magnetic stainless steel rod
1398.Ø.stroke.stroke1.F Non magnetic chromed rod

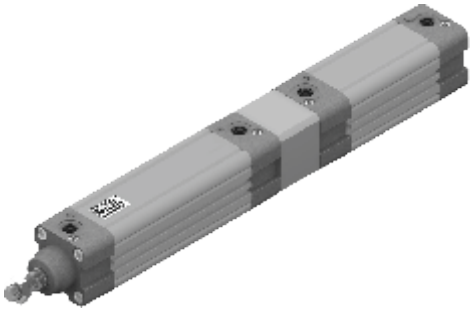

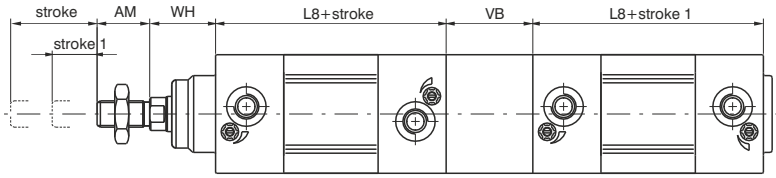

Opposed tandem with common rod "D"

Ordering code
TECHNOPOLYMER COVERS
1386.Ø.stroke.stroke1.D Magnetic chromed rod
1387.Ø.stroke.stroke1.D Magnetic stainless steel rod
1388.Ø.stroke.stroke1.D Non magnetic chromed rod
ALUMINIUM COVERS
1396.Ø.stroke.stroke1.D Magnetic chromed rod
1397.Ø.stroke.stroke1.D Magnetic stainless steel rod
1398.Ø.stroke.stroke1.D Non magnetic chromed rod

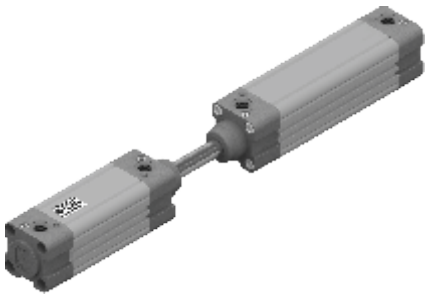

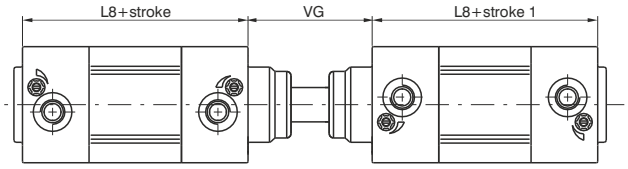

Tandem with opposed rods "E"

Ordering code
TECHNOPOLYMER COVERS
1386.Ø.stroke.stroke1.E Magnetic chromed rod
1387.Ø.stroke.stroke1.E Magnetic stainless steel rod
1388.Ø.stroke.stroke1.E Non magnetic chromed rod
ALUMINIUM COVERS
1396.Ø.stroke.stroke1.E Magnetic chromed rod
1397.Ø.stroke.stroke1.E Magnetic stainless steel rod
1398.Ø.stroke.stroke1.E Non magnetic chromed rod

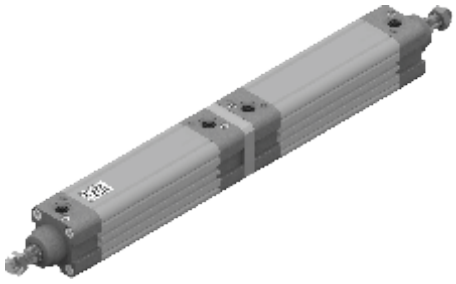

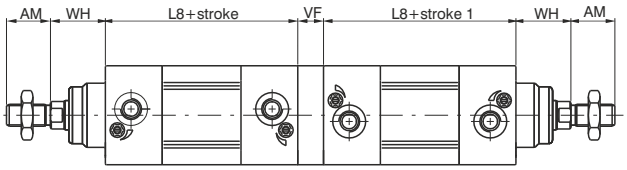

Variants

Ordering code
13_ _.Ø.stroke._ _.P = Version with PUR seals
13_ _.Ø.stroke._ _.K = Version with aluminium piston
13_ _.Ø.stroke._ _.PK =Version with PUR seals and aluminium piston

Table of dimensions

Bore			32	40	50	63	80	100
AM			22	24	32	32	40	40
B (d 11)			30	35	40	45	45	55
BG			16	16	18	18	16	16
E			46	54	65	77,5	95,5	115,5
EE			G 1/8"	G 1/4"	G 1/4"	G 3/8"	G 3/8"	G 1/2"
G			29	31	33	36	40	44
KK			M10X1,25	M12X1,25	M16x1,5	M16x1,5	M20x1,5	M20x1,5
KV			17	19	24	24	30	30
KW			6	7	8	8	9	9
L2			16	20	25	25	32	35
L3			4	4	5	5	/	/
L8			94	105	106	121	128	138
MM			12	16	20	20	25	25
PL			13	14	14	16	16	18
RT			M6	M6	M8	M8	M10	M10
SW			10	13	17	17	22	22
TG			32,5	38	46,5	56,5	72	89
VA			4	4	4	4	4	4
VB			33	41	51	51	65	71
VD			8	10	12	12	15	16
VF			12	12	16	16	20	20
VG			48	54	69	69	86	91
WH			26	30	37	37	46	51
Weight gr.	Aluminium covers	stroke 0	550	690	1200	1590	2500	3670
		every 10 mm	29	40	57	66	96	112
Weight gr.	Technopolymer covers	stroke 0	470	590	1020	1320	2090	3010
		every 10 mm	29	40	57	66	96	112

Distributor supports

This accessory permits to mount a valve or an electrovalve on a side of the cylinder. The plate can be fitted on the cylinder profiled barrel, and, on it, can be mounted either a threaded distributor or a base on whic can be mounted an ISO distributor. Once installed the connections must be done with fittings and pipes. All of the threaded holes on the support plate are dedicated to different valves series as per attached drawing.

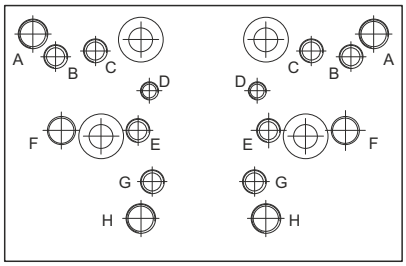

Fixing holes for valves series:

A = 414/2
B = 824
C = 828, T488, 488, 484
D = 2400
E = 2600
G = 858/2
H = T424

Ordering code
1386.15

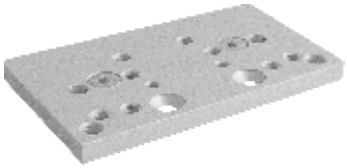

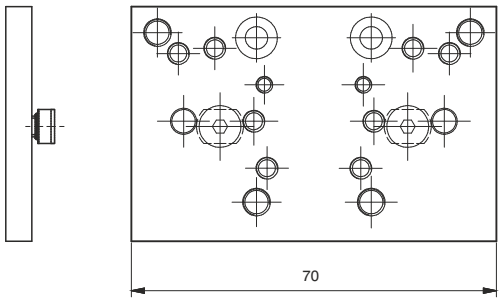

Attention: do not use ISO distributor for base mounting

Bases for ISO distributors

Ordering code	
1320.23	bases for ISO 1 electrodistributor
1320.24	bases for ISO 2 electrodistributor

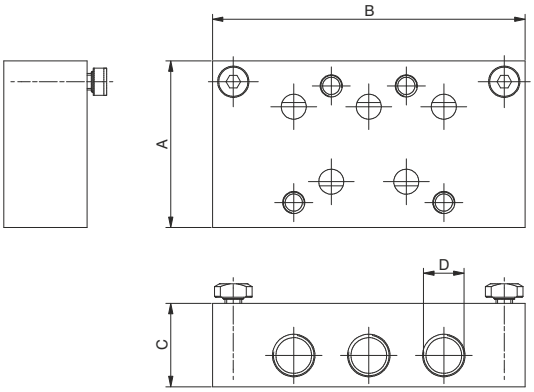

	Dimensions			
	A	B	C	D
bases for ISO 1 electrodistributor	40	75	15	G 1/8"
bases for ISO 2 electrodistributor	50	95	20	G 1/4"

4

Construction characteristics

End plates	die-casting aluminium
Rod	C43 chromed steel or stainless steel
Barrel	aluminium alloy anodised
Rod-guide bushing	spheroid bronze on steel band with P.T.F.E. coat
Piston	Ø32 - Ø100 acetal resin, aluminium on request Ø125 - Ø200 aluminium **V**, **Q**, **R**, **L** versions (Ø32 - Ø100): aluminium
Seals	standard: NBR oil resistant rubber, PUR piston rod seals **V** version: FPM **Q** version: NBR and PUR with plastic rod scraper with a high wear resistance **R** version: PUR with metallic rod scraper **L** version: special PUR
Cushion adjusting screws	brass

Technical characteristics

Fluid	filtered and preferably lubricated air or not (if lubricated the lubrication must be continuous) **L version** (for low temperature): dried air, guarantee a dew point lower than the minimum operating temperature
Max. pressure	10 bar
Operating temperature	-5°C - +70°C with standard seals -30°C - +80°C with PUR seals (**P** version) -5°C - +80°C with FPM seals for 1390 and 1391 series (magnetic piston) (**V** version) -5°C - +150°C with FPM seals for 1392 series (no magnetic piston) (**V** version) -20°C - +80°C (**Q** version) -10°C - +80°C (**R** version) -50°C - +80°C (**L** version)

Bore	Ø	32	40	50	63	80	100	125	160	200
Cushioning lenght	mm	27	31	31	37	40	44	44	50	55
Cushion length version with aluminum piston	mm	20	20	22	22	32	32	/	/	/

Please follow the suggestions below to ensure a long life for these cylinders:
- use clean and lubricated air
- correct alignment during assembly with regard to the applied load so as to avoid radial components or bending the rod;
- avoid high speeds together with long strokes and heavy loads: this would produce kinetic energy which the cylinder cannot absorb, especially if used as a limit stop (in this case use mechanical stop device and the aluminium piston);
- evaluate the environmental characteristics of cylinder used (high temperature, hard atmosphere, dust, humidity etc.)

VERSIONS WITH ADDITIONAL ROD SCRAPER

Version with plastic rod scraper (Q)

The pneumatic seal is manufactured using a special NBR seal material, with the rod scraper that comes in contact with the external environment made of a plastic material with a high wear resistance. The geometric shape with its excellent scraping capacity guarantees additional protection of the piston rod and nose seal against the impurities, liquids, water, and debris.

Version with metallic rod scraper (R)

The pneumatic seal is manufactured using a special FPM seal material with its own scraping lip with the additional rod scraper that comes into contact with the external environment made of metal. This combination of scraping lip and metal rod scraper enable these actuators to be used in particularly extreme environments.

Here are some examples:

Aluminum foundries: To remove the residues of alumina or fluorine compounds that are deposited on the piston rod during the preparation phase of aluminum casting.

Automotive: To prevent debris which has collected on the piston rod damaging the nose seal during operation especially waste produced during the welding process.

Industrial ovens: To eliminate cement powders or those produced during the manufacture of bricks/tiles

Thanks to the high-performance nose seal and scraper protection of the piston rod, the cylinder will be protected against premature wear that you would normally experience using standard cylinders in these harsh environments.

Low temperature version (L): The special seals compound allows the use of the cylinders up to a temperature of -50°C. The rod scraper seal is equipped with a metallic scraper which removes ice crystals which might form at minus temperature

Please note: air must be dry for applications with lower temperature.

Use hydraulic oils H class (ISO VG32) for correct continued lubrication.

Our Technical Department will be glad to help.

Standard strokes (for all diameters)

from 0 to 150, every 25 mm
from 150 to 500, every 50 mm
from 500 to 1000, every 100 mm

Stroke tolerance (ISO 15552)

Alesaggio	Stroke	Tolerance
32 - 40 - 50	up to 500	+2 0
	over 500 up to 1250	+3.2 0
63 - 80 - 100	up to 500	+2.5 0
	over 500 up to 1250	+4 0
125 - 160 - 200	up to 500	+4 0
	over 500 up to 1250	+5 0

4

Basic version “01”

Ordering code
1390.Ø.stroke.01 Magnetic chromed rod
1391.Ø.stroke.01 Magnetic stainless steel rod
1392.Ø.stroke.01 Non magnetic chromed rod

This is the configuration representing the basic cylinder according to ISO–VDMA standards. It can be directly anchored on machine parts using the four threads on the end cover screws. For other applications see “Cylinder section” on the General Catalogue, where different types of attachments are shown.

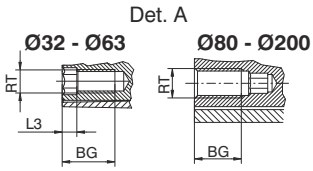

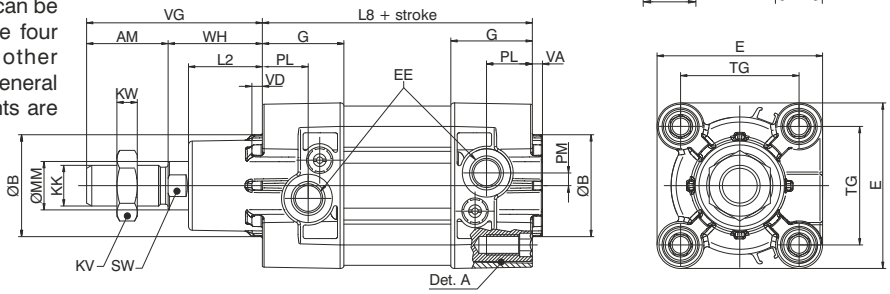

Push/pull version “02”

Ordering code
1390.Ø.stroke.02 Magnetic chromed rod
1391.Ø.stroke.02 Magnetic stainless steel rod
1392.Ø.stroke.02 Non magnetic chromed rod

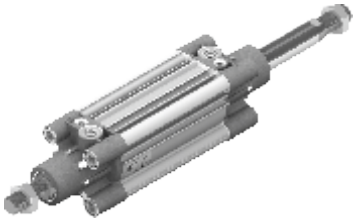

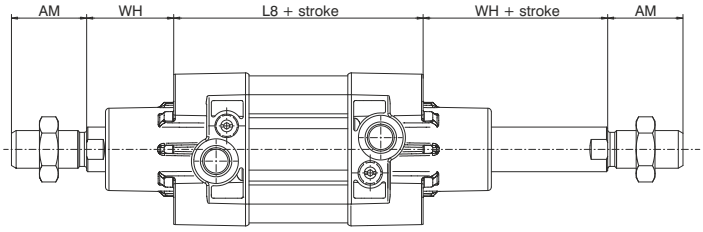

Tandem push with common rods “G”

Ordering code
1390.Ø.stroke.G Magnetic chromed rod
1391.Ø.stroke.G Magnetic stainless steel rod
1392.Ø.stroke.G Non magnetic chromed rod

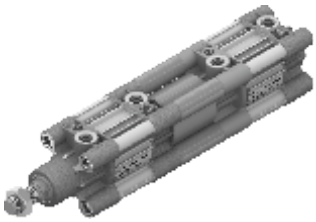

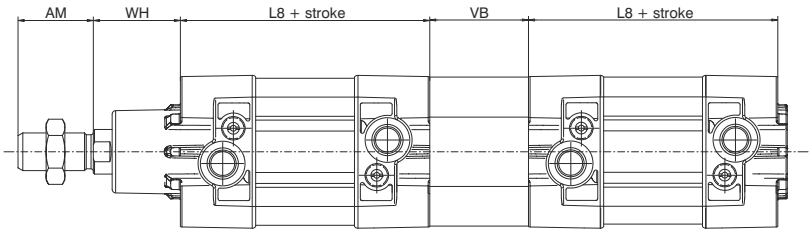

Tandem push with independent rods “F”

Ordering code
1390.Ø.stroke.stroke1.F Magnetic chromed rod
1391.Ø.stroke.stroke1.F Magnetic stainless steel rod
1392.Ø.stroke.stroke1.F Non magnetic chromed rod

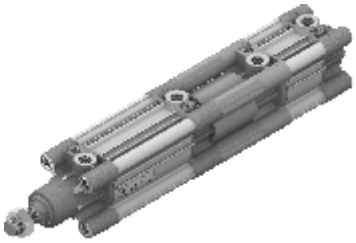

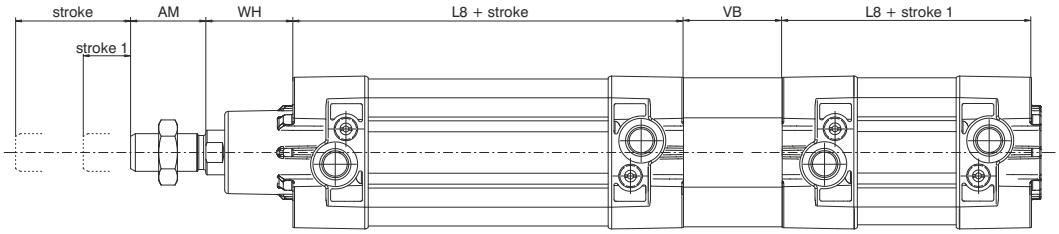

Opposed tandem with common rod "D"

Ordering code
1390.Ø.stroke.stroke1.D Magnetic chromed rod
1391.Ø.stroke.stroke1.D Magnetic stainless steel rod
1392.Ø.stroke.stroke1.D Non magnetic chromed rod

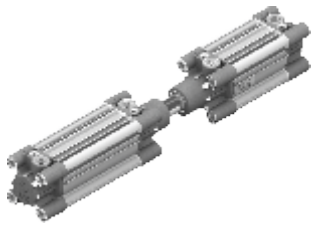

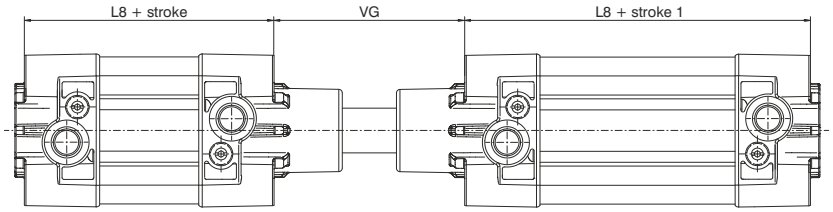

Tandem with opposed rods - "E"

Ordering code
1390.Ø.stroke.stroke1.E Magnetic chromed rod
1391.Ø.stroke.stroke1.E Magnetic stainless steel rod
1392.Ø.stroke.stroke1.E Non magnetic chromed rod

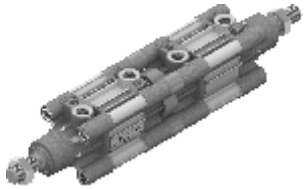

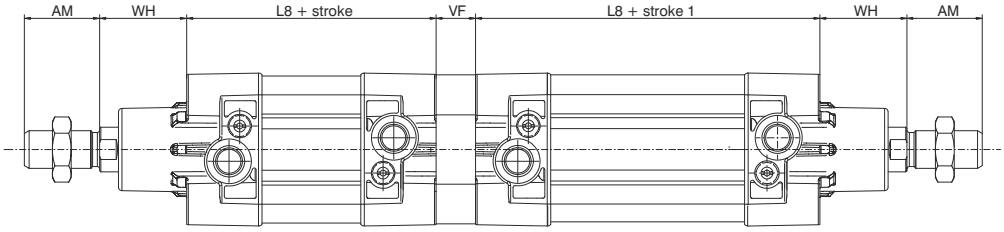

Variants

Ordering code
139_.Ø.stroke._ _.P = Version with PUR seals
139_.Ø.stroke._ _.K = Version with aluminium piston (from Ø32 to Ø100)
139_.Ø.stroke._ _.PK =Version with PUR seals and aluminium piston (from Ø32 to Ø100)
139_.Ø.stroke._ _.V =Version with FPM seals and aluminium piston
139_.Ø.corsa._ _.R = Version with metallic rod scraper and aluminium piston (Ø32-Ø100)
139_.Ø.corsa._ _.Q = Version with plastic rod scraper and aluminium piston (Ø32-Ø100)
139_.Ø.corsa._ _.L = Version for low temperature and aluminium piston (-50°C) (Ø32-Ø100)

Table of dimensions

Bore		32	40	50	63	80	100	125	160	200
AM		22	24	32	32	40	40	54	72	72
B (d 11)		30	35	40	45	45	55	60	65	75
BG		16	16	18	18	16	16	21	25	25
E		47	54	65	76	95	113	138	180	216
EE		G 1/8"	G 1/4"	G 1/4"	G 3/8"	G 3/8"	G 1/2"	G 1/2"	G 3/4"	G 3/4"
G		29.5	33	32	36	38.5	41.5	48	49	49
KK		M10X1.25	M12X1.25	M16x1.5	M16x1.5	M20x1.5	M20x1.5	M27x2	M36x2	M36x2
KV		17	19	24	24	30	30	41	55	55
KW		6	7	8	8	9	9	12	18	18
L2		19	22	29	29	35	36	45	50	60
L3		4	4	5	5	/	/	/	/	/
L8		94	105	106	121	128	138	160	180	180
MM		12	16	20	20	25	25	32	40	40
PL		13	16	18	18	16	18	25	26	25
PM		3	4	5	4.5	2.5	6	8	11	11
RT		M6	M6	M8	M8	M10	M10	M12	M16	M16
SW		10	13	17	17	22	22	27	36	36
TG		32.5	38	46.5	56,5	72	89	110	140	175
VA		4	4	4	4	4	4	6	6	6
VB		33	41	51	51	65	71	75	70	75
VD		4	4	4	4	4	4	6	6	6
VF		12	12	16	16	20	20	25	30	30
VG		48	54	69	69	86	91	119	152	167
WH		26	30	37	37	46	51	65	80	95
Weight	stroke 0	460	650	1030	1360	2180	2890	5700	11200	14900
gr.	every 10 mm	23	32	45	49	75	81	130	195	245

On the ECOLIGHT series it is possible to use three sensor types, according to bore, as indicated below:

Sensors code **1500._**
RS._
HS._

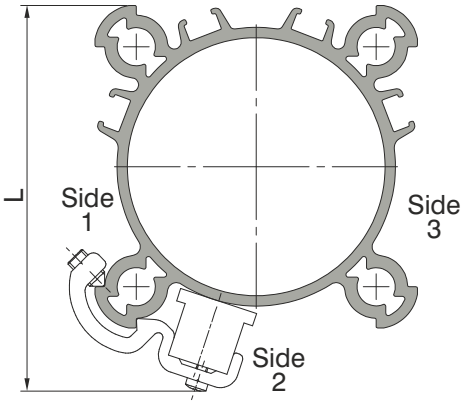

Ø32 - Ø100: the sensors can be fixed on the three sides as indicated in the drawing, by using suitable brackets (except for Ø32 on side 2)

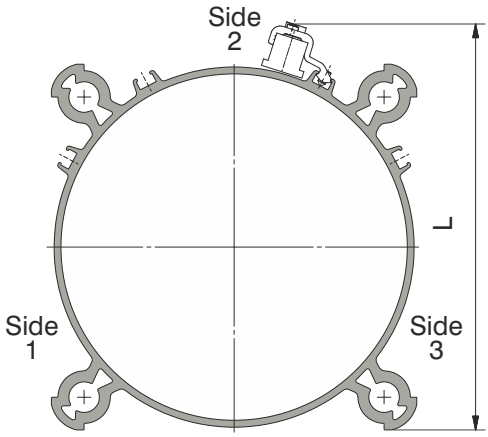

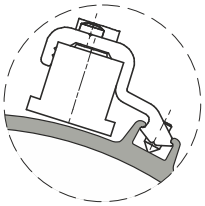

Ø125 - Ø200: the sensors can be fixed on the three sides as indicated in the drawing, by using suitable bracket

Code	Bore	L
1390.A	Ø32	58
	Ø40	65
1390.B	Ø50	75
	Ø63	86
1390.C	Ø80	105
	Ø100	122
1390.D	Ø125	150
	Ø160	190
	Ø200	225

Sensors code **1580._**
MRS._
MHS._

Feeding connections side sensors slots

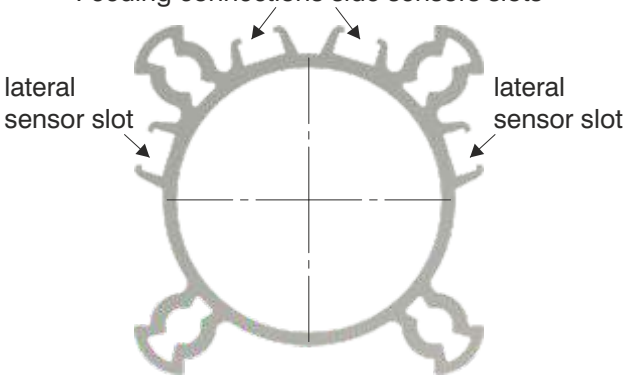

Sensors code **1590._**
LRS._
LHS._

1590 series sensor only

1580 and 1590 series sensors

1580 and 1590 series sensors

Ø32 - Ø63

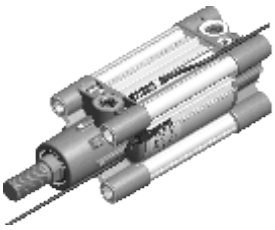

CYLINDERS - BORE SIZES Ø32 to Ø63:
The two slots on connection side are plugged, therefore only sensor 1590 can be used. Suitable for top housing and once placed by means of its screw, it can be fixed in desired position.

1580 and 1590 series sensors

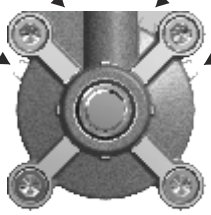

Ø80

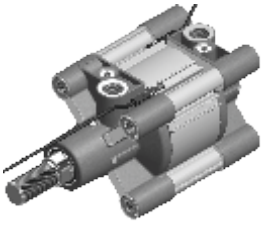

CYLINDERS - BORE SIZE Ø80:
The two top housing can be accessed from the front of the unit, one housing can be accessed from the front end cap and the opposite housing from the rear end cap. It is therefore possible to use both type of sensors: 1580 - 1590.

1580 and 1590 series sensors

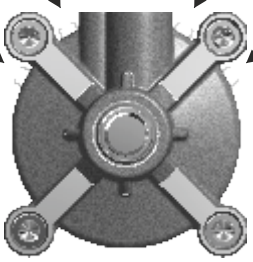

Ø100 - Ø200

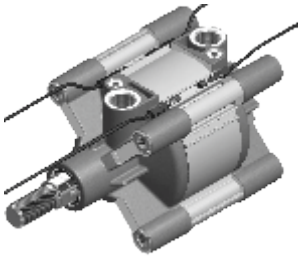

CYLINDERS - BORE SIZE Ø100-Ø200:
All four housings can be accessed from the front of the unit. It is therefore possible to use both type of sensors: 1580 - 1590.

Distributor supports

This accessory permits to mount a valve or an electrovalve on a side of the cylinder. The plate can be fitted on the cylinder profiled barrel. Once installed the connections must be done with fittings and pipes. All of the threaded holes on the support plate are dedicated to different valves series as per attached drawing.

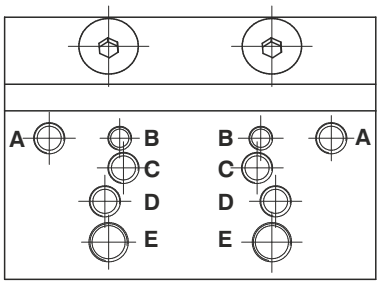

Fixing holes for valves series:

A = 488 / 484
B = 2400
C = T488
D = 2600
E = T424

Ordering code
1390.25 (for Ø32) **1390.26** (for Ø40) **1390.27** (for Ø50) **1390.28** (for Ø63) **1390.29** (for Ø80) **1390.30** (for Ø100)

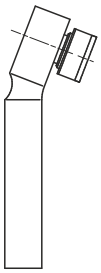

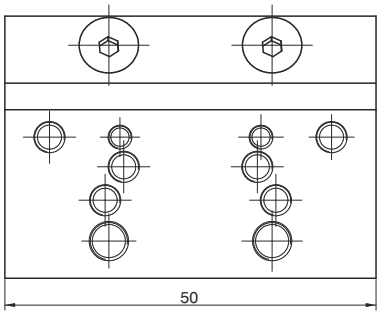

Attention: do not use ISO distributor for base mounting

4

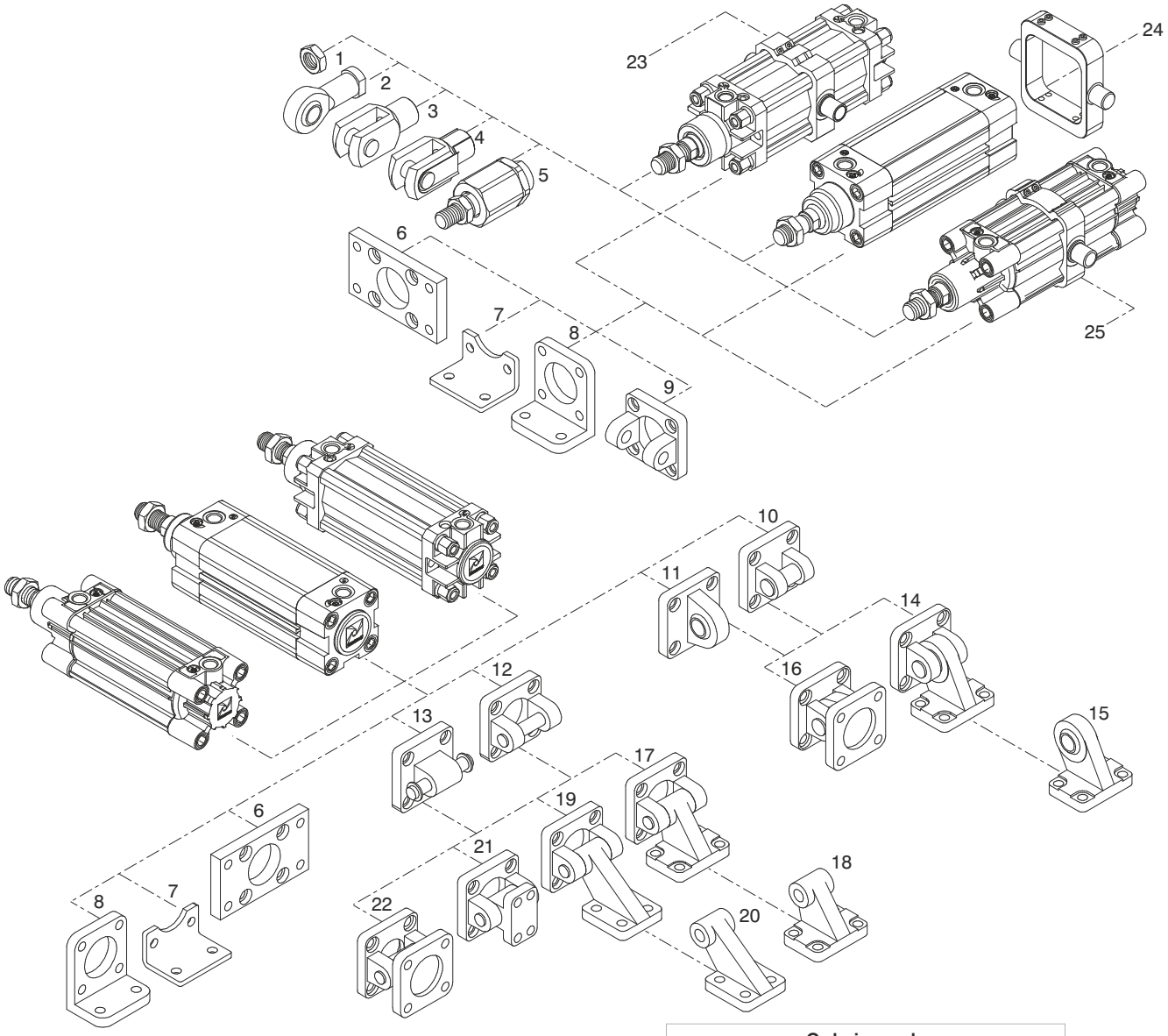

		Ordering code	
Pos.	**Description**	**Aluminium**	**Steel**
1	Rod nut	/	**1320.Ø.18F**
2	Ball joint	/	**1320.Ø.32F**
3	Forks	/	**1320.Ø.13F**
4	Fork with clips	/	**1320.Ø.13/1F**
5	Self-aligning joint	/	**1320.Ø.33F**
6	Flange (MF1-MF2)	**1390.Ø.03F** **1390.Ø.03FP**	**1380.Ø.03F**
7	Short mounting foot brackets (in sheet metal MS1)	/	**1320.Ø.05/1F**
8	Standard mounting foot brackets	**1320.Ø.05F**	/
9	Front clevis	**1380.Ø.08F**	**1320.Ø.19F**
10	Rear narrow clevis (AB6)	**1380.Ø.30F**	**1320.Ø.29F**
11	Rear male clevis (with jointed head according to DIN 648K standard)	**1380.Ø.15F**	**1320.Ø.25F**
12	Rear female clevis (MP2)	**1380.Ø.09F**	**1320.Ø.20F**
13	Rear male clevis (MP4)	**1380.Ø.09/1F**	**1320.Ø.21F**
14	Complete square angle trunnion (pos.10 + pos.15)	/	**1320.Ø.27F**
15	Simple square counter clevis (pos.14)	/	**1320.Ø.28F**
16	Square angle trunnion with joined head (pos.10 + pos.11)	**1380.Ø.36F**	**1320.Ø.26F**
17	Square angle trunnion (AB7) (pos.18 + pos.12)	**1380.Ø.35F**	**1320.Ø.23F**
18	Simple square counter clevis (pos.17)	**1320.Ø.11/2F**	**1320.Ø.24F**
19	Simple rear trunnion with support brackets (pos.20 + pos.12)	**1380.Ø.11F**	/
20	Simple square counter clevis (pos.19)	**1320.Ø.11/1F**	/
21	Standard trunnion	**1380.Ø.10F**	/
22	Standard complete trunnion (pos.12 + pos.13)	**1380.Ø.22F**	**1320.Ø.22F**
23	1319 - 1321 cylinders series Intermediate trunnion	**1320.Ø.12BF**	**1320.Ø.12F**
24	1386 - 1388 / 1396 - 1398 Ecoplus series Intermediate trunnion	/	**1386.Ø.12F**
25	1390 - 1392 Ecolight series Intermediate trunnion	**1390.Ø.12F**	/

Front and rear flanges (MF1 - MF2)

Ordering code		
Steel	: **1380.Ø.03F**	(Ø32 - Ø200)
Aluminium	: **1390.Ø.03F**	(Ø32 - Ø100)
Die-casting aluminium	: **1390.Ø.03FP**	(Ø32 - Ø100)

Plate which allows anchorage of the cylinder at a right angle to the plane. It is made of zinc-plated extruded steel.

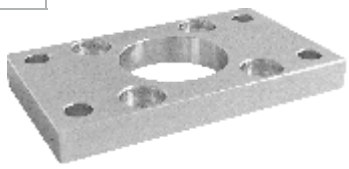

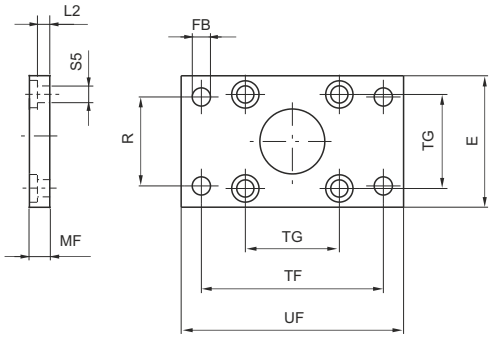

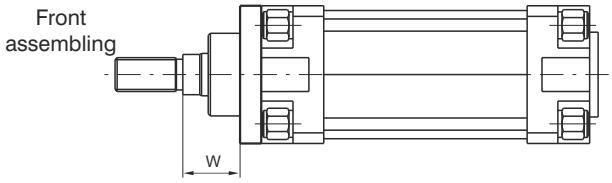

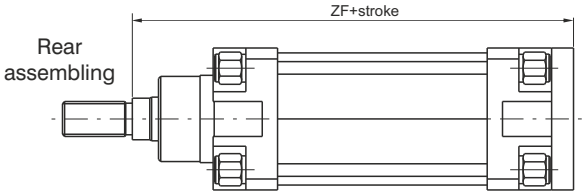

Bore	E	FB (H 13)	MF (JS 14)	R (JS 14)	TF (JS 14)	TG	UF	ZF	W	L2	S5	Weight(gr.) steel	Weight(gr.) aluminium	Weight(gr.) Die-casting aluminium
32	45	7	10	32	64	32,5	80	130	16	5	6,6	190	65	60
40	52	9	10	36	72	38	90	145	20	5	6,6	250	90	69
50	65	9	12	45	90	46,5	110	155	25	6,5	9	480	170	130
63	75	9	12	50	100	56,5	120	170	25	6,5	9	620	220	170
80	95	12	16	63	126	72	150	190	30	8	11	1430	500	345
100	115	14	16	75	150	89	170	205	35	8	11	1990	690	485
125	140	16	20	90	180	110	205	245	45	10,5	14	3750	/	/
160	180	18	20	115	230	140	260	280	60	9,5	18	6350	/	/
200	220	22	25	135	270	175	300	300	70	12,5	18	11350	/	/

Standard mounting foot brackets

Ordering code	
Aluminium:	**1320.Ø.05F** (1 piece)

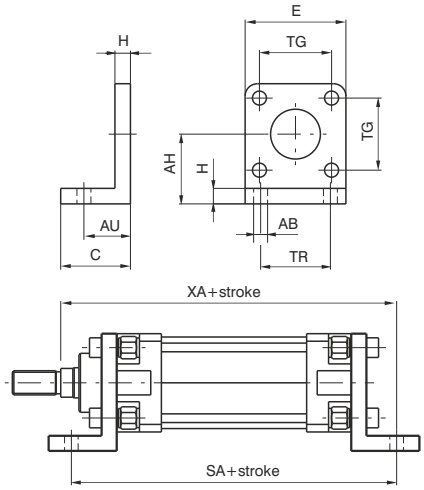

Elements used to anchor the cylinder parallel to the mounting plane. They are made of cast aluminium, painted black.

Bore	32	40	50	63	80	100	125	160	200
AB (H 14)	7	9	9	9	12	14	16	18	22
AH (JS 15)	32	36	45	50	63	71	91	115	135
AU (±0,2)	24	28	32	32	41	41	45	60	70
C	35	35	45	45	55	56	68	82	90
E	45	52	65	75	95	115	140	180	220
H	8	8	10	10	12	12	16	20	20
SA	142	161	170	185	210	220	250	300	320
TG	32,5	38	46,5	56,5	72	89	110	140	175
TR (JS 14)	32	36	45	50	63	75	90	115	135
XA	144	163	175	190	215	230	270	320	345
Weight gr.	45	65	140	175	380	470	920	2300	3200

Short mounting foot brackets (in sheet metal MS1)

Ordering code	
Steel:	**1320.Ø.05/1F** (1 piece)

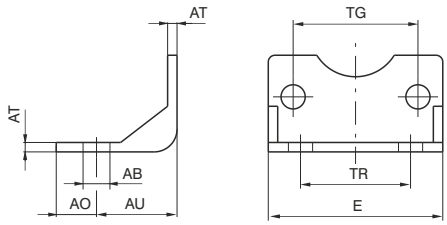

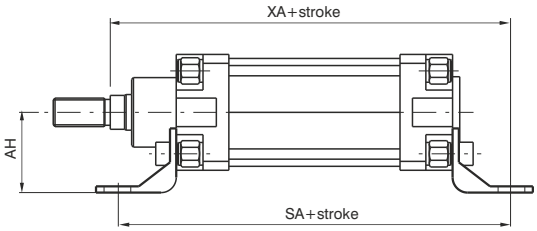

Elements used to anchor the cylinder parallel to the mounting plane. They are made of steel, and painted black.

Bore	32	40	50	63	80	100	125	160	200
AB (H 14)	7	9	9	9	12	14	16	18	22
AH (JS 15)	32	36	45	50	63	71	90	115	135
AU (± 0.2)	24	28	32	32	41	41	45	60	70
AO (± 0.2)	11	8	15	13	14	16	25	15	30
E	45	52	65	75	95	115	140	180	220
AT	4	4	5	5	6	6	8	9	12
SA	142	161	170	185	210	220	250	300	320
TG	32,5	38	46,5	56,5	72	89	110	140	175
TR (JS 14)	32	36	45	50	63	75	90	115	135
XA	144	163	175	190	215	230	270	320	345
Weight gr.	65	80	170	190	380	452	1090	1190	3450

Front clevis (not specified by ISO-VDMA standards)

Ordering code	
Aluminium:	**1380.Ø.08F**
Steel:	**1320.Ø.19F**

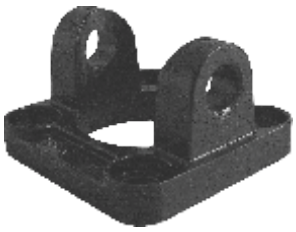

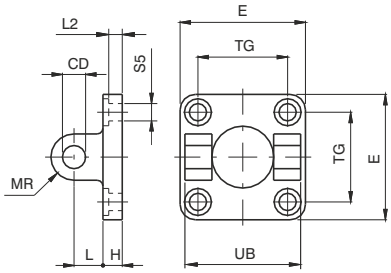

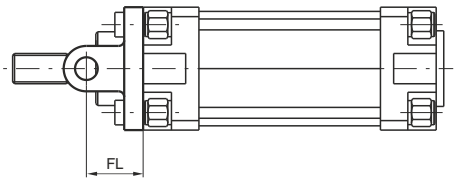

Used to mount the cylinder either parallel or at a right angle to the mounting plane; allows the cylinder to self-align under load. Made of aluminium alloy or steel (see ordering code) and painted black.

Bore		32	40	50	63	80	100	125	160	200
CD (H9)		10	12	12	16	16	20	25	30	30
E	Aluminium	45	52	65	75	95	115	140	180	220
	Steel	45	55	65	75	95	115	140	180	220
FL (±0,2)		22	25	27	32	36	41	50	55	60
H	Aluminium	9	9	11	11	14	14	20	20	25
	Steel	10	10	10	12	14	16	20	20	20
L	Aluminium	13	16	16	21	22	27	30	35	35
	Steel	12	15	17	20	22	25	30	35	40
MR		10	12	12	16	16	20	25	25	25
TG		32,5	38	46,5	56,5	72	89	110	140	175
UB (h14)		45	52	60	70	90	110	130	170	170
L2(±0,5)		5,5	5,5	6,5	6,5	10	10	10	10	11
S5 (H13)		6,6	6,6	9	9	11	11	14	18	18
Weight gr.	Aluminium	50	75	125	190	380	620	1180	1780	2900
	Steel	150	235	340	550	1010	1710	3360	5750	8960

Rear clevis (MP2)

Ordering code

Aluminium: **1380.Ø.09F**
Steel: **1320.Ø.20F**

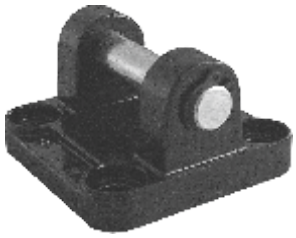

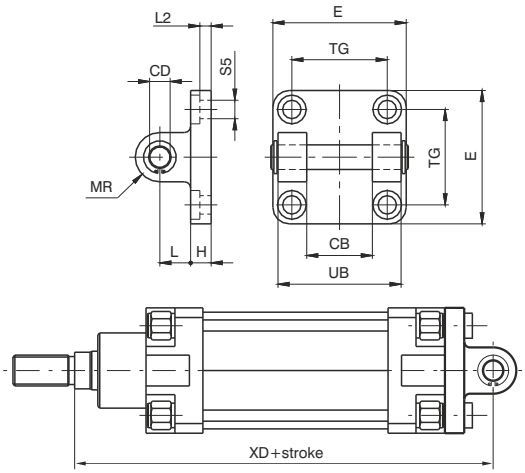

Similar to type 08 but includes a hinge pin. This type of mounting allows anchorage of the cylinder either parallel or right angle to plane; the cylinder rod can oscillate and self-align as necessary when under load. Made of aluminium alloy or steel (see ordering code) and painted black.

Bore		32	40	50	63	80	100	125	160	200
CB (H 14)		26	28	32	40	50	60	70	90	90
CD		10	12	12	16	16	20	25	30	30
E	Aluminium	45	52	65	75	95	115	140	180	220
	Steel	45	55	65	75	95	115	140	180	220
H	Aluminium	9	9	11	11	14	14	20	20	25
	Steel	10	10	10	12	14	16	20	20	20
L	Aluminium	13	16	16	21	22	27	30	35	35
	Steel	12	15	17	20	22	25	30	35	40
MR		10	12	12	16	16	20	25	25	25
TG		32,5	38	46,5	56,5	72	89	110	140	175
UB (h14)		45	52	60	70	90	110	130	170	170
XD		142	160	170	190	210	230	275	315	335
L2(±0,5)		5,5	5,5	6,5	6,5	10	10	10	10	11
S5		6,6	6,6	9	9	11	11	14	18	18
Weight	Aluminium	80	130	185	310	530	910	1710	2760	3820
gr.	Steel	180	290	400	670	1160	2000	3890	6730	9880

Rear male clevis (MP4)

Ordering code

Aluminium: **1380.Ø.09/1F**
Steel: **1320.Ø.21F**

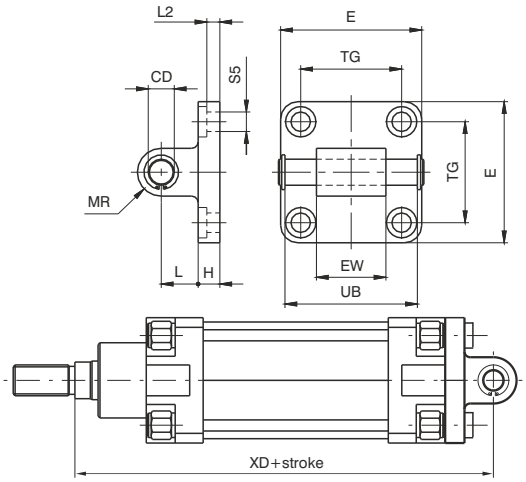

Similar to 09 clevis except for the connection, which is male rather than female. Used to mount the cylinder either parallel or at a right angle to the plane; the cylinder rod can oscillate and self-align as necessary when under load. Made of aluminium alloy or steel (see ordering code) and painted black.

Bore		32	40	50	63	80	100	125	160	200
CD		10	12	12	16	16	20	25	30	30
E	Aluminium	45	52	65	75	95	115	140	180	220
	Steel	45	55	65	75	95	115	140	180	220
EW		$26^{-0,2}_{-0,6}$	$28^{-0,2}_{-0,6}$	$32^{-0,2}_{-0,6}$	$40^{-0,2}_{-0,6}$	$50^{-0,2}_{-0,6}$	$60^{-0,2}_{-0,6}$	$70^{-0,5}_{-1,2}$	$90^{-0,5}_{-1,2}$	$90^{-0,5}_{-1,2}$
H	Aluminium	9	9	11	11	14	14	20	20	25
	Steel	10	10	10	12	14	16	20	20	20
L	Aluminium	13	16	16	21	22	27	30	35	35
	Steel	12	15	17	20	22	25	30	35	40
MR		10	12	12	16	16	20	25	25	25
TG		32,5	38	46,5	56,5	72	89	110	140	175
UB $(^{-0,5}_{-0})$		46	53	61	71	91	111	132	171,5	171,5
XD		142	160	170	190	210	230	275	315	335
L2 (±0.5)		5,5	5,5	6,5	6,5	10	10	10	10	11
S5		6,6	6,6	9	9	11	11	14	18	18
Weight	Aluminium	90	130	190	340	580	960	1890	2830	3940
gr.	Steel	210	330	430	810	1350	2400	4300	6880	8560

Simple rear trunnion with support brackets (not specified by ISO-VDMA standards)

Ordering code

Aluminium: **1380.Ø.11F**
Counter clevis can be ordered separately with code1320.Ø.11/1F

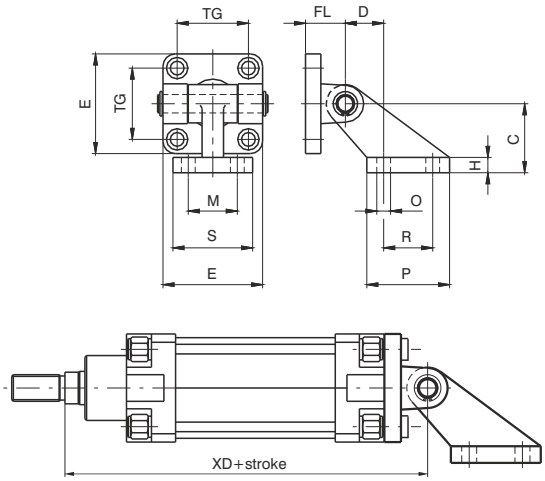

Used to mount cylinders parallel to the plane to which the counter clevis is attached. Allows self-alignment of the cylinder rod under load with an oscillation up to 90 degrees from the mounting plane.

Bore	32	40	50	63	80	100	125	160	200
C (±0,2)	32	45	45	63	63	90	90	140	140
D (±0,5)	18	25	25	32	32	40	40	50	50
E	45	52	65	75	95	115	140	180	220
H	8	10	10	12	12	17	17	20	20
FL	22	25	27	32	36	41	50	55	60
M (JS 14)	25	32	32	40	40	50	50	63	63
TG	32,5	38	46,5	56,5	72	89	110	140	175
O (H 13)	7	9	9	11	11	14	14	18	18
P	37	54	54	75	75	103	103	154	154
R (JS 14)	20	32	32	50	50	70	70	110	110
S	41	52	52	63	63	80	80	110	110
XD	142	160	170	190	210	230	275	315	335
Weight gr.	130	260	330	600	820	1560	2530	4735	5795

Square angle trunnion

Ordering code

Aluminium: **1380.Ø.35F**
Counter clevis can be ordered separately with code1320.Ø.11/2F

Steel: **1320.Ø.23F** (Ø32-Ø100)
Counter clevis can be ordered separately with code1320.Ø.24F

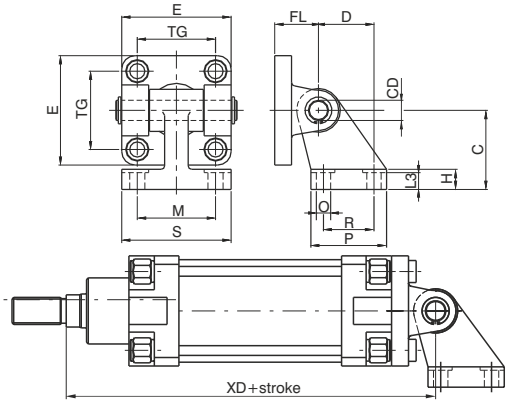

Bore		32	40	50	63	80	100	125	160	200
E	Aluminium	45	52	65	75	95	115	140	180	220
	Steel	45	55	65	75	95	115	140	180	220
TG		32,5	38	46,5	56,5	72	89	110	140	175
FL		22	25	27	32	36	41	50	55	60
D (JS14)		21	24	33	37	47	55	70	97	105
CD		10	12	12	16	16	20	25	30	30
C (JS15)		32	36	45	50	63	71	90	115	135
H	Aluminium	8	10	12	14	14	17	20	25	30
	Steel	8	10	12	12	14	15	/	/	/
L3	Aluminium	6,4	8,4	10,4	12,4	11,5	14,5	16,8	21	26
	Steel	6,5	8,5	10,5	10,5	11,5	12,5	/	/	/
R (JS14)		18	22	30	35	40	50	60	88	90
P		31	35	45	50	60	70	90	126	130
O (H13)		6,6	6,6	9	9	11	11	14	14	18
S		51	54	65	67	86	96	124	156	162
M (JS14)		38	41	50	52	66	76	94	118	122
XD		142	160	170	190	210	230	275	315	335
Weight gr.	Aluminium	120	180	225	435	730	1220	2325	3780	4950
	Steel	340	500	640	1250	2100	3500	/	/	/

Standard trunnion (not specified by ISO-VDMA standards)

Ordering code
Aluminium: **1380.Ø.10F**

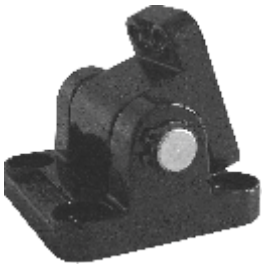

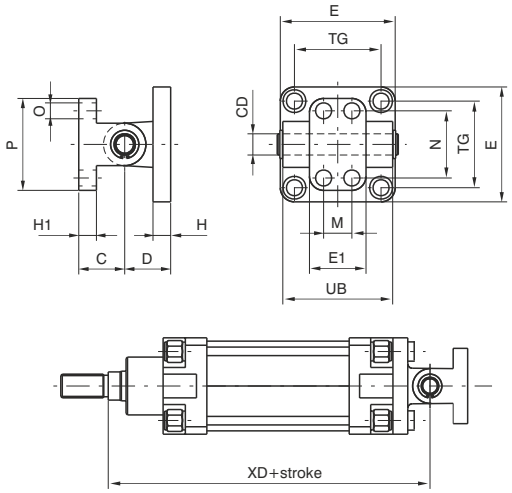

Mounting consists of clevis 09 and counter clevis. Used to mount cylinders at a right angle to the plane to which the counter clevis is attached. Allows self-alignment of the cylinder rod under load with an oscillation of ± 60 degrees.

Bore	32	40	50	63	80	100	125	160	200
C (±0.2)	18	26	26	34	34	41	41	55	55
CD	10	12	12	16	16	20	25	30	30
D	22	25	27	32	36	41	50	55	60
E	45	52	65	75	95	115	140	180	220
E1	25	32	32	46	46	56	56	71	71
H	10	10	12	12	16	16	20	20	25
H1	8	10	10	12	12	16	16	20	20
M (±0.2)	-	16	16	25	25	32	32	43	43
N (±0.2)	28	38	38	54	54	90	90	150	150
O	7	9	9	11	11	14	14	18	18
P	40	52	52	75	75	115	115	180	180
TG	32.5	38	46.5	56.5	72	89	110	140	175
UB	45	52	60	70	90	110	130	170	170
XD	142	160	170	190	210	230	275	315	335
Weight gr.	110	190	240	490	710	1290	2090	3690	4810

Rear narrow clevis

Ordering code
Aluminium: **1380.Ø.30F**
Steel: **1320.Ø.29F** (Ø32-Ø125)

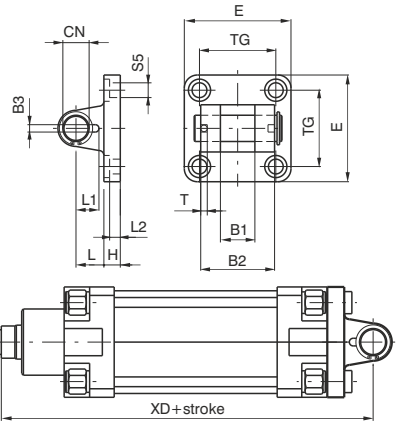

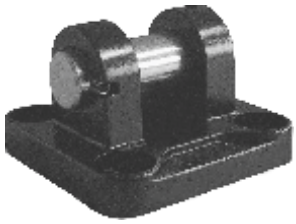

Utilised with clevis 15F allows the cylinder to oscillate in all directions. Made of aluminium alloy or steel (see ordering code) and painted black.

Bore		32	40	50	63	80	100	125	160	200
B1 (H 14)		14	16	21	21	25	25	37	43	43
B2 (d 12)		34	40	45	51	65	75	97	122	122
B3 ($^{+0.2}_{-0}$)		3,3	4,3	4,3	4,3	4,3	6,3	6,3	6,3	6,3
CN		10	12	16	16	20	20	30	35	35
E	Aluminium	45	52	65	75	95	115	140	180	220
	Steel	45	55	65	75	95	115	140	180	220
H	Aluminium	9	9	11	11	14	14	20	20	25
	Steel	10	10	10	12	14	16	20	/	/
L	Aluminium	13	16	16	21	22	27	30	35	35
	Steel	12	15	17	20	22	25	30	/	/
L1		11,5	12	14	14	16	16	24	26,5	26,5
L2 (±0,5)		5,5	5,5	6,5	6,5	10	10	10	10	11
S5		6,6	6,6	9	9	11	11	14	18	18
T		3	4	4	4	4	4	6	6	6
TG		32,5	38	46,5	56,5	72	89	110	140	175
XD		142	160	170	190	210	230	275	315	335
Weight gr.	Aluminium	70	115	200	290	570	820	1710	3010	4380
	Steel	160	270	370	670	1110	2100	4150	/	/

Rear male clevis (with jointed head according to DIN 648K standard)

Ordering code

Aluminium: **1380.Ø.15F**
Steel: **1320.Ø.25F**(Ø32-Ø125)

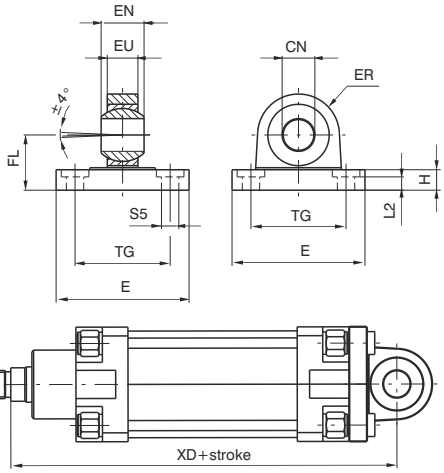

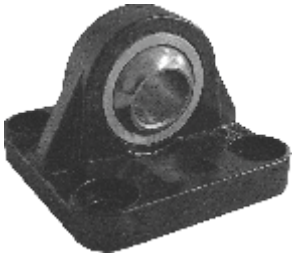

Utilised with clevis 30F allows the cylinder to oscillate in all directions. Made of aluminium alloy or steel (see ordering code) and painted black.

Bore		32	40	50	63	80	100	125	160	200
CN (H 7)		10	12	16	16	20	20	30	35	35
E	Aluminium	45	52	65	75	95	115	140	180	220
	Steel	45	55	65	75	95	115	140	180	220
EN (-0.1)		14	16	21	21	25	25	37	43	43
ER	Aluminium	16	19	21	24	28.5	30	40	45	48
	Steel	15	18	20	23	27	30	40	/	/
EU		10.5	12	15	15	18	18	25	28	28
FL (JS 15)		22	25	27	32	36	41	50	55	60
H	Aluminium	9	9	11	11	14	14	20	20	25
	Steel	10	10	10	12	14	16	20	/	/
L2 (±0.5)		5.5	5.5	6.5	6.5	10	10	10	10	11
S5		6.6	6.6	9	9	11	11	14	18	18
TG		32.5	38	46.5	56.5	72	89	110	140	175
XD		142	160	170	190	210	230	275	315	335
Weight	Aluminium	60	100	180	245	480	650	1410	2420	3840
gr.	Steel	210	310	400	710	1350	2400	4000	/	/

Complete standard trunnion (with joined head according to DIN 648K standards)

Ordering code

Aluminium: **1380.Ø.36F**
Counter clevis can be ordered separately with code 1380.Ø.15F

Steel: **1320.Ø.26F** (Ø32-Ø125)
Counter clevis can be ordered separately with code 1320.Ø.25F

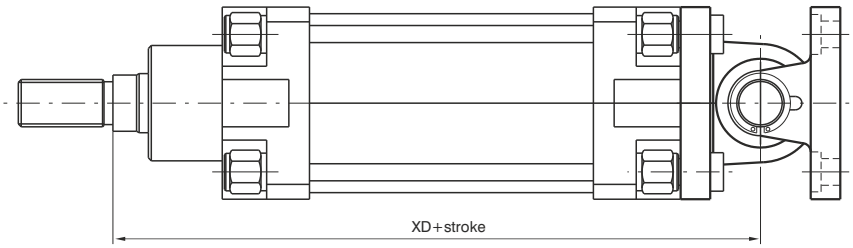

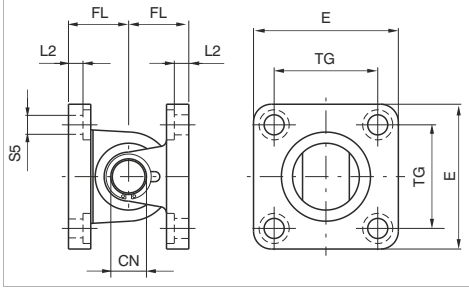

Bore		32	40	50	63	80	100	125	160	200
CN		10	12	16	16	20	20	30	35	35
E	Aluminium	45	52	65	75	95	115	140	180	220
	Steel	45	55	65	75	95	115	140	180	220
FL (JS 15)		22	25	27	32	36	41	50	55	60
L2 (±0.5)		5.5	5.5	6.5	6.5	10	10	10	10	11
S5		6.6	6.6	9	9	11	11	14	18	18
TG		32.5	38	46.5	56,5	72	89	110	140	175
XD		142	160	170	190	210	230	275	315	335
Weight	Aluminium	130	215	380	535	1050	1470	3120	5430	8220
gr.	Steel	380	580	770	1380	2460	4500	8150	/	/

Standard complete trunnion

Ordering code

Aluminium: **1380.Ø.22F**
Mounting consists of rear clevis code 1380.Ø.09F
+ rear male clevis code1380.Ø.09/1F
(ordering separately)

Steel: **1320.Ø.22F**
Mounting consists of rear clevis code 1320.Ø.20F
+ rear male clevis code 1320.Ø.21F
(ordering separately)

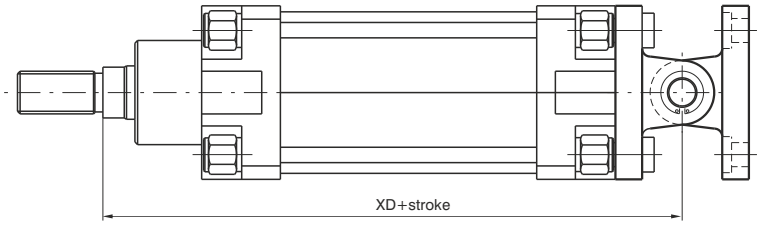

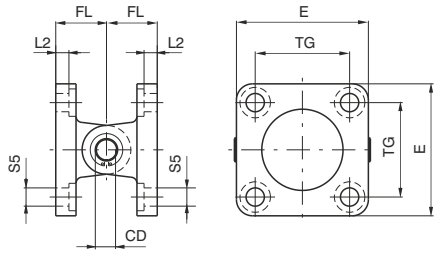

Bore	32	40	50	63	80	100	125	160	200
CD	10	12	12	16	16	20	25	30	30
E	45	55	65	75	95	115	140	180	220
FL	22	25	27	32	36	41	50	55	60
L2 (±0.5)	5,5	5,5	6,5	6,5	10	10	10	10	11
S5	6,6	6,6	9	9	11	11	14	18	18
TG	32,5	38	46,5	56,5	72	89	110	140	175
XD	142	160	170	190	210	230	275	315	335
Weight gr.	360	580	780	1370	2370	4110	7670	12650	17480

Complete square angle trunnion (with joined head according to DIN 648K standards)

Ordering code

Steel: **1320.Ø.27F**
Mounting consists of rear clevis narrow code 1320.Ø.29F
+ simple counter clevis code 1320.Ø.28F
(ordering separately)

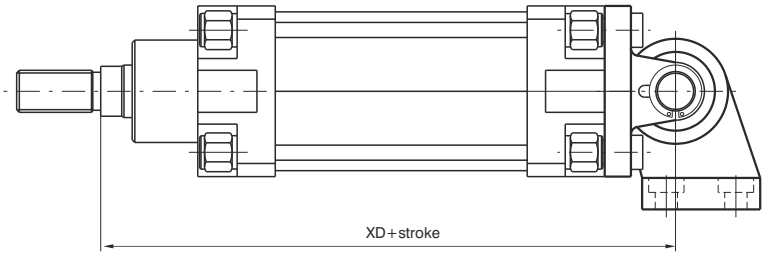

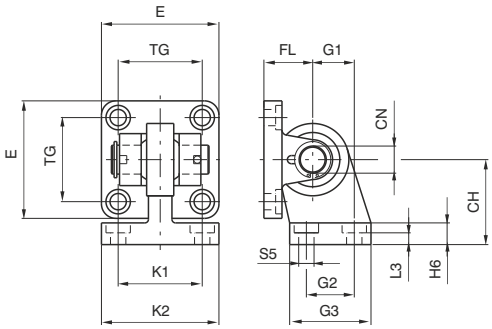

Bore	32	40	50	63	80	100	125
CH (JS 15)	32	36	45	50	63	71	90
CN	10	12	16	16	20	20	30
E	45	55	65	75	95	115	140
FL (JS 15)	22	25	27	32	36	41	50
G1 (JS 15)	21	24	33	37	47	55	70
G2 (JS 14)	18	22	30	35	40	50	60
G3	31	35	45	50	60	70	90
H6	10	10	12	12	14	15	20
K1 (JS 14)	38	41	50	52	66	76	94
K2	51	54	65	67	86	96	124
L3 ($^{+0,5}_{-0}$)	8,5	8,5	10,5	10,5	11,5	12,5	17
S5	6,6	6,6	9	9	11	11	14
TG	32,5	38	46,5	56,5	72	89	110
XD	142	160	170	190	210	230	275
Weight gr.	330	480	830	1220	2100	3580	7000

Intermediate trunnion Series 1319 - 1321

Ordering code

Steel: **1320.Ø.12F**

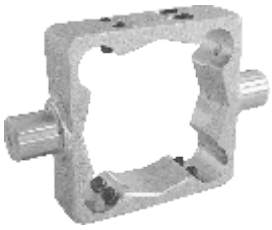

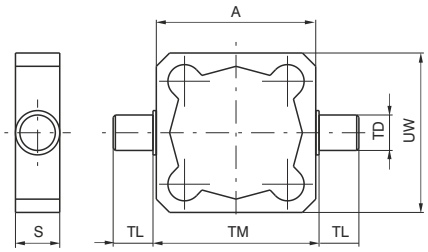

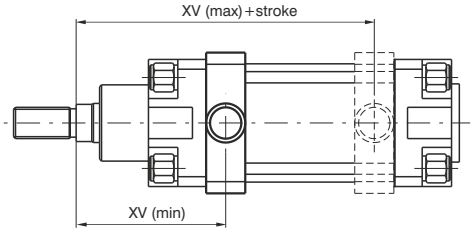

Clevis to be mounted on the barrel to have the centre of rotation of the hinge pin at a point between the end plates of the cylinder. It is attached to the barrel by means of eight pointed grains that block in the "V" groove of the four protruding shapes. In the case of anchorage subject to heavy use, it is recommended to connect the clevis once the right position has been found.
Attention: mounting of the clevis with contact to the end plates does not allow the use of the magnetic sensors as the switch limits.

Bore	32	40	50	63	80	100	125	160	200
A	49	62	73	87	109	130	155	190	240
S	18	21	21	27	27	32	32	40	40
TD (e9)	12	16	16	20	20	25	25	32	32
TL (h14)	12	16	16	20	20	25	25	32	32
TM (h14)	50	63	75	90	110	132	160	200	250
UW	59	62	73	87	109	130	155	190	240
XV (max.)	85	96	102	109	123.5	131.5	162	193	204
XV (min.)	61	69	78	86	96.5	108.5	128	150	168
Weight gr.	180	270	330	650	890	1550	1950	3580	5850

Intermediate trunnion Series 1386 - 1388 - 1396 - 1398

Ordering code

Steel: **1386.Ø.12F**

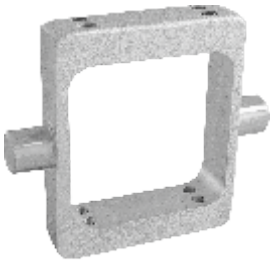

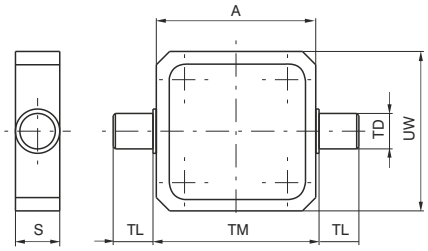

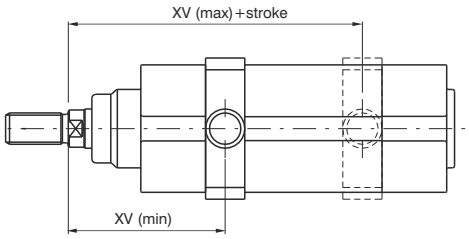

Clevis to be mounted on the barrel to have the centre of rotation of the hinge pin at a point between the end plates of the cylinder. It is attached to the barrel by means of eight pointed grains. In the case of anchorage subject to heavy use, it is recommended to connect the clevis once the right position has been found.

Attention: mounting of the clevis with contact to the end plates does not allow the use of the magnetic sensors as the switch limits.

Bore	32	40	50	63	80	100
A	49.8	62.6	74.1	89.1	109.1	130.1
S	18	21	21	27	27	30
TD (e 9)	12	16	16	20	20	25
TL (h 14)	12	16	16	20	20	25
TM (h 14)	50	63	75	90	110	132
UW	70	78	91	94	130	145
XV (max.)	80	91.5	97.5	106.5	118.5	127
XV (min.)	66	73.5	82.5	88.5	101.5	113
Weight gr.	195	350	430	565	1035	1450

Intermediate trunnion Series 1319 - 1321

Ordering code
1320.Ø.12BF (Aluminium with steel bushes)

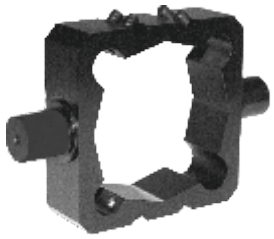

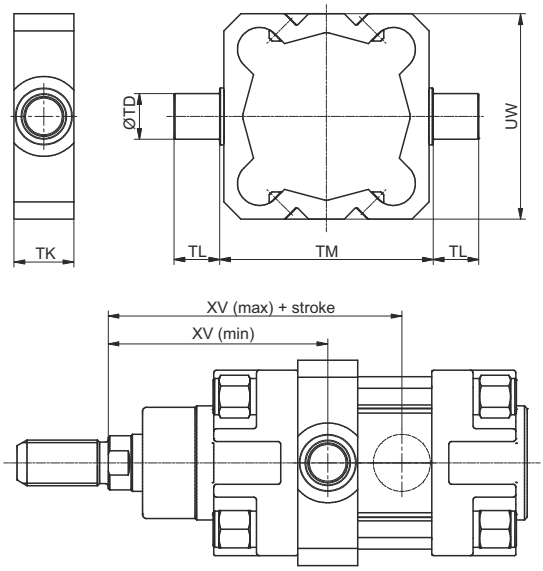

Aluminium Intermediate Trunnion with steel bushes to be mounted on the barrel. This solution allows the cylinder to rotate around the hinge which can be mounted in any position between the end caps. It is attached to the barrel by means of 8 grub screws which secure the Trunnion to the extruded barrel. In the case of heavy duty applications it is recommended that the Trunnion is secured using expansion pins.
In case off applications with high speed, high load and high pressure please contact our technical office.
Please note: If the Trunnion is mounted in direct contact with the cylinder end cap, it will not be possible to fit magnetic sensors at the end of stroke.

Bore	32	40	50	63	80	100
TD	Ø12	Ø16	Ø16	Ø20	Ø20	Ø25
TL	12	16	16	20	20	25
TM	50	63	75	90	110	132
TK	18	21	21	27	27	32
UW	54	60	72	87	109	130
XV min.	61	69	78	86	96.5	108.5
XV max.	85	96	102	109	123.5	131.5
Weight gr.	70	110	140	280	370	630

Intermediate trunnion Series 1390 - 1392

Ordering code
1390.Ø.12F (Aluminium with steel bushes)

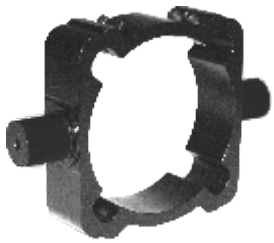

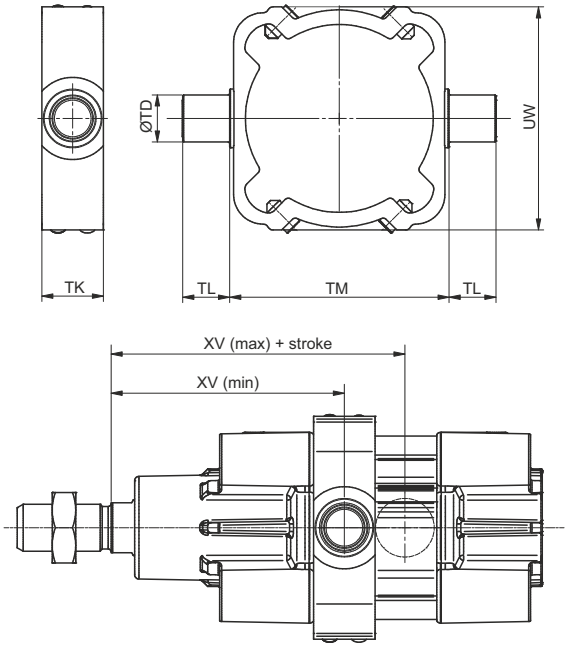

Aluminium Intermediate Trunnion with steel bushes to be mounted on the barrel. This solution allows the cylinder to rotate around the hinge which can be mounted in any position between the end caps. It is attached to the barrel by means of 8 grub screws which secure the Trunnion to the extruded barrel. In the case of heavy duty applications it is recommended that the Trunnion is secured using expansion pins.
In case off applications with high speed, high load and high pressure please contact our technical office.
Please note: If the Trunnion is mounted in direct contact with the cylinder end cap, it will not be possible to fit magnetic sensors at the end of stroke 1500._, RS._, HS._ series.

Bore	32	40	50	63	80	100
TD	Ø12	Ø16	Ø16	Ø20	Ø20	Ø25
TL	12	16	16	20	20	25
TM	53*	63	75	90	110	132
TK	18	21	21	27	27	32
UW	56	64	76	92	112	134
XV min.	65	74	80	87	99	109
XV max.	81	91	100	108	121	130.5
Weight gr.	60	100	125	240	320	540

* (Ø32, TM: not according to standard ISO 15552

Support for intermediate trunnion

Ordering code
1320.Ø.12/1F (1 piece)

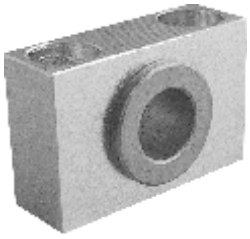

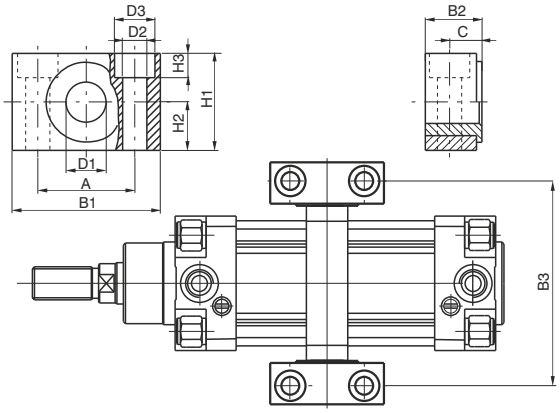

Combining two supports to the intermediate trunnion it is possible to fix the cylinder on plane surface.

Bore	32	40	50	63	80	100	125	160	200
A (±0.2)	32	36	36	42	42	50	50	60	60
B1	46	55	55	65	65	75	75	92	92
B2	18	21	21	23	23	28.5	28.5	40	40
B3	71	87	99	116	136	164	192	245	295
C	10.5	12	12	13	13	16	16	22.5	22.5
D1 (F7)	12	16	16	20	20	25	25	32	32
D2	6.6	9	9	11	11	14	14	18	18
D3	11	15	15	18	18	20	20	26	26
H1	30	36	36	40	40	50	50	60	60
H2 (±0.1)	15	18	18	20	20	25	25	30	30
H3	7	9	9	11	11	13	13	17	17
Weight gr. (1 piece)	100	150	150	235	235	435	435	850	850

Rod forks and nuts

Ordering code
1320.Ø.13F
1320.Ø.13/1F (from ø32 to ø100)
1320.Ø.18F

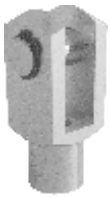

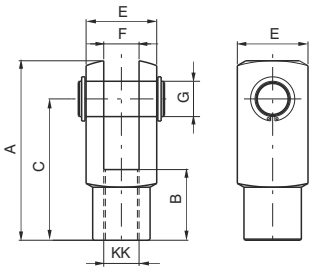

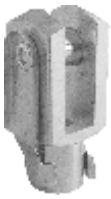

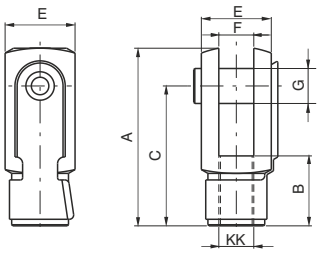

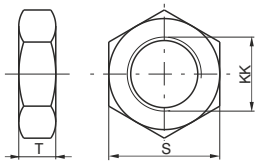

Fork:
Element that when screwed to the rod consents a regular functioning even when there are significant lateral forces as the connection point. Made of zinc-plated steel.
Nut:
Used to block the position of the fork.

Bore		32	40	50	63	80	100	125	160	200
A		52	62	83	83	105	105	148	188	188
B		20	24	32	32	40	40	56	72	72
C		40	48	64	64	80	80	110	144	144
E		20	24	32	32	40	40	55	70	70
F(B12)		10	12	16	16	20	20	30	35	35
G		10	12	16	16	20	20	30	35	35
S		17	19	24	24	30	30	41	55	55
T		6	7	8	8	9	9	12	18	18
KK		M10X1.25	M12X1.25	M16X1.5	M16X1.5	M20X1.5	M20X1.5	M27X2	M36X2	M36X2
Weight	forks	100	140	340	340	680	680	2500	4000	4000
gr.	nut	15	20	20	20	40	40	100	210	210

Ball joint

Ordering code
1320.Ø.32F

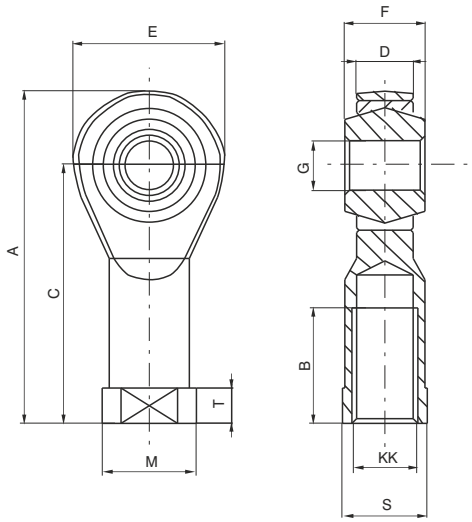

Bore	32	40	50	63	80	100	125	160	200
A	57	66	85	85	102	102	145	165	165
B	20	22	28	28	33	33	51	56	56
C	43	50	64	64	77	77	110	125	125
D (-0.1)	10.5	12	15	15	18	18	25	28	28
E	28	32	42	42	50	50	70	80	80
F	14	16	21	21	25	25	37	43	43
G (H 7)	10	12	16	16	20	20	30	35	35
KK	M10x1.25	M12x1.25	M16x1.5	M16x1.5	M20x1.5	M20x1.5	M27x2	M36x2	M36x2
M	19	22	27	27	34	34	50	58	58
S	17	19	22	22	30	30	41	50	50
T	6.5	6.5	8	8	10	10	15	17	17
Weight gr.	76	110	220	220	410	410	1200	1600	1600

Self-aligning joint

Ordering code
1320.Ø.33F

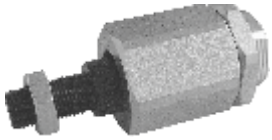

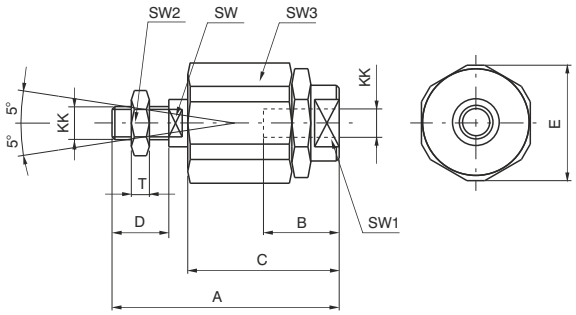

Bore	32	40	50	63	80	100
A	71	75	103	103	119	119
B	20	20	32	32	40	40
C	46	46	63	63	71	71
D	20	24	32	32	40	40
E	32	32	45	45	45	45
KK	M10x1.25	M12x1.25	M16x1.5	M16x1.5	M20x1.5	M20x1.5
SW	12	12	20	20	20	20
SW1	19	19	27	27	27	27
SW2	17	19	24	24	30	30
SW3	30	30	41	41	41	41
T	6	7	8	8	9	9
Weight gr.	220	230	660	660	700	700

Construction characteristics

Body	extruded shape anodized aluminium alloy 6060
Bushings	sintered bronze
Wiper	oil resitant NBR rubber
Rods	chromed C43 steel
Plate	plated zinc steel
Mounting block	plated zinc steel

Technical characteristics

Max. suggested strokes for 1200 series:

Diameter	20	25
Stroke mm	200	250

Max. suggested strokes for 1320 series:

Diameter	32	40	50	63	80
Stroke mm	300	350	450	500	550

Loading diagram based on dimension "**A**"

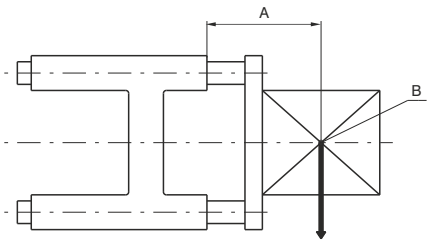

A = Protusion
B = Load centre of gravity

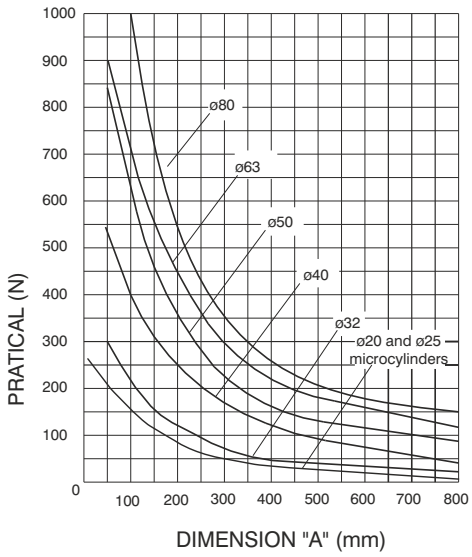

Use and maintenance

Follow the indication of the above diagram as far as loads are concerned. A large quantity of grease is placed between the two wipers during assembly, therefore the linear control units should not require special maintenance.

Dimensions for microcylinders ISO 6432

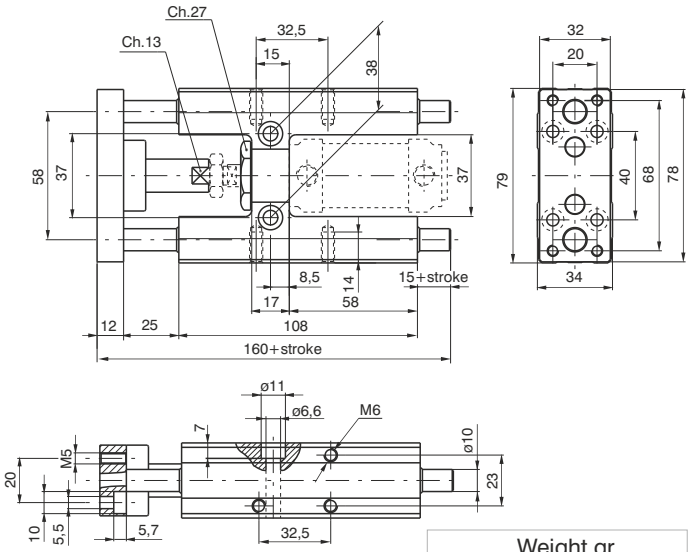

Ordering code
1260.Ø.stroke.GLB (Microcylinders ISO 6432 must be ordered separately)

Weight gr.	
stroke 100	every 50 mm
970	60

Standard strokes
ø 20 100 - 150 - 200 mm
ø 25 100 - 150 - 200 - 250 mm

Sensors and sensor clamps: Use standard sensors and clamps.

Dimensions for microcylinders ISO 15552

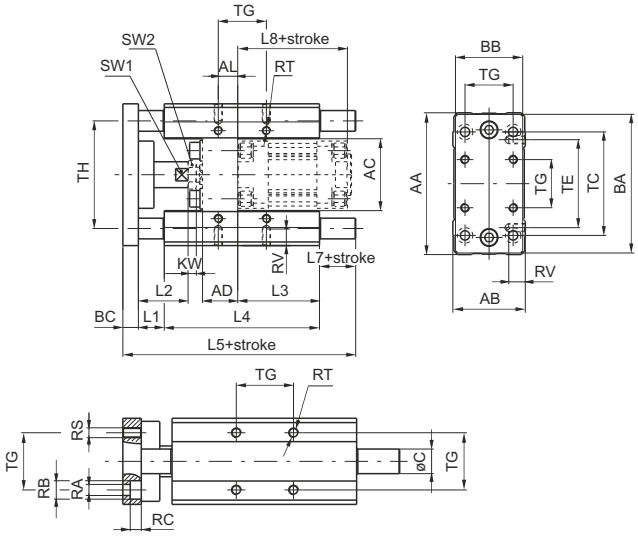

Ordering code
1320.Ø.stroke.GLB (Cylinders must be ordered separately)

Weight gr.	Bore	Ø32	Ø40	Ø50	Ø63	Ø80
	stroke 100	1720	2900	4700	6000	11300
	every 50 mm	91	159	159	250	380

Bore	AA	AB	AC	AD	AL	BA	BB	BC	C	KW	L1	L2	L3	L4	L5
32	97	49	50	24	4.3	93	45	12	12	6	25	39	76	125	187
40	115	58	57.5	28	11	112	55	12	16	7	25	44	81	140	207
50	137	70	69.5	34	18.8	134	65	15	20	8	25	48	79	150	225
63	152	85	84.5	34	15.3	149	80	15	20	8	25	48	111	182	242
80	189	105	106	34	21	180	100	20	25	9	25	53	128	215	302

Bore	L7	L8	RA	RB	RC	RS	RT	RV	SW1	SW2	TC	TE	TG	TH
32	25	94	6.6	11	6.5	M6	M6	12	15	17	78	61	32.5	74
40	30	105	6.6	11	6.5	M6	M6	14	15	19	84	69	38	87
50	35	106	9	15	9	M8	M8	16	22	24	100	85	46.5	104
63	20	121	9	15	9	M8	M8	16	22	24	105	100	56.5	119
80	42	128	11	18	11	M10	M10	20	27	24	130	130	72	148

Standard strokes
Ø 32 100 - 150 - 200 - 250 - 300 mm
Ø 40 100 - 150 - 200 - 250 - 300 - 350 mm
Ø 50 100 - 150 - 200 - 250 - 300 - 350 - 400 - 450 mm
Ø 63 100 - 150 - 200 - 250 - 300 - 350 - 400 - 450 - 500 mm
Ø 80 100 - 150 - 200 - 250 - 300 - 350 - 400 - 450 - 500 - 550 mm

Sensor clamps and brackets for 1319-1320 series
Use standard sensors and brackets on the rear and following special brackets on front of cylinders for use sensors codes 1500._, RS._, HS._ which have the following ordering codes:

1320.AGL sensor bracket for cylinders Ø32 and Ø40
1320.BGL sensor bracket for cylinders Ø50 and Ø63
1320.CGL sensor bracket for cylinders Ø80

General

The 1393-1394 stainless steel ISO 15552 cylinders series are designed for corrosion resistance application such as marine, pharmaceutical and food ambiences.
The pre lubrication grease used is NSF H1 certified for food application.
Specific care has been taken during the design stages and the result is a clean profile cylinder easy to clean and free from possible residue build-up areas.
All parts in contact with the external environment are in Stainless steel 316L and the seals are available in two different compounds for different temperature applications: PUR -30C° - +80 C° and FPM -5°C - +150°C.
The range starts from 32 bore up to 100 bore , round barrel and tie rods design. Double acting version standard or with through rod, magnetic or not magnetic piston available.
The piston is aluminium and the sensor bracket, when required is in stainless steel 316.
The cylinder can be fixed via the threaded holes in the tie rod nuts or with the wide range of stainless steel accessories.

Construction characteristics

End caps, piston rod, barrel, cushion screws	Stainless steel AISI 316
Rod-guide bushings	Stainless steel AISI 316 with P.T.F.E. coat
Half-pistons	Aluminium
Seals	PUR or FPM on request
Lubricating grease	NSF-H1 certified grease for incidental contact with food

Technical characteristics

Fluid	Filtered and preferably lubricated air or not (if lubricated the lubrication must be continuous)
Max. pressure	10 bar
Operating temperature	-30° C - +80°C with PUR seals -5° C - +150°C with FPM seals and non magnetic piston -5° C - +80°C with FPM seals and magnetic piston
Bore	Ø 32 - 40 - 50 - 63 - 80 - 100
Cushioning lenght	mm 20 - 20 - 22 - 22 - 32 - 32

Please follow the suggestions below to ensure a long life for these cylinders:
- use clean and lubricated air
- correct alignment during assembly with regard to the applied load so as to avoid radial components or bending the rod.
- avoid high speeds together with long strokes and heavy loads: this would produce kinetic energy which the cylinder cannot absorb, especially if used as a limit stop (in this case use mechanical stop device)
- evaluate the environmental characteristics of cylinder used (high temperature, hard atmosphere, dust, humidity etc.)

Please note: air must be dried for applications with lower temperature.
Our Technical Department will be glad to help.

Standard strokes (for all diameters)

from 0 to 150, every 25 mm
over 150 up to 500, every 50 mm
over 500 up to 1000, every 100

Stroke tolerance (ISO 15552)

Bore	Stroke	Tolerance
32 - 40 - 50	up to 500	+2 0
	over 500 up to 1250	+3.2 0
63 - 80 - 100	up to 500	+2.5 0
	over 500 up to 1250	+4 0

Basic version “01”

Ordering code
1393.Ø.stroke.01 Magnetic **1394.Ø.stroke.01** Non magnetic

This is the configuration representing the basic cylinder according to ISO standards. It can be directly anchored on machine parts using the four threads on the end cover screws. For other applications see the pages about different types of stainless steel fixings.

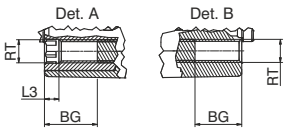

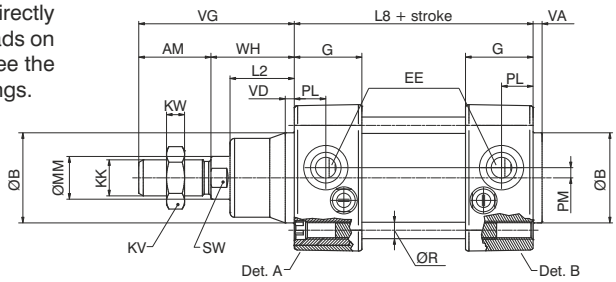

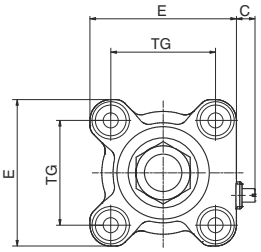

Push/pull version - “02”

Ordering code
1393.Ø.stroke.02 Magnetic **1394.Ø.stroke.02** Non magnetic

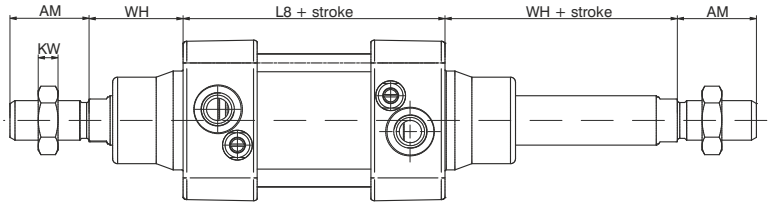

Variants

Version with FPM seals

Ordering code
139_.(93.94) Ø.stroke._ _ V

Table of dimensions

Bore		32	40	50	63	80	100
AM		22	24	32	32	40	40
ØB (d 11)		30	35	40	45	45	55
BG min.		16	16	16	16	18	17
C	min.	4	4	4	4	3,5	3,5
	max.	7.5	7,5	8,5	8,5	9	9
E		47	52	65	76	95	113
EE		G1/8"	G1/4"	G1/4"	G3/8"	G3/8"	G1/2"
G		29	31	30	34	36	40,5
KK		M10X1,25	M12X1,25	M16X1,5	M16X1,5	M20x1,5	M20X1,5
KV		17	19	24	24	30	30
KW		16	7	8	8	9	9
L2		20	22	28,5	29	35	36
L3		4,5	4,5	5	5	6	6
L8		94	105	106	121	128	138
ØMM		12	16	20	20	25	25
PL		13	14	14	16	16	18
PM		3	3,5	4,5	7	8	8
ØR		Ø5,2	Ø5,2	Ø7,1	Ø7,1	Ø8,9	Ø8,9
RT		M6	M6	M8	M8	M10	M10
SW		10	13	17	17	22	22
TG		32,5	38	46,5	56,5	72	89
VA		4	4	4	4	4	4
VD		4	4	4	4	4	4
VG		48	54	69	69	86	91
WH		26	30	37	37	46	51
Weight	stroke 0	1000	1430	2150	3000	4400	6400
gr.	every 10 mm	35	45	63	80	120	135

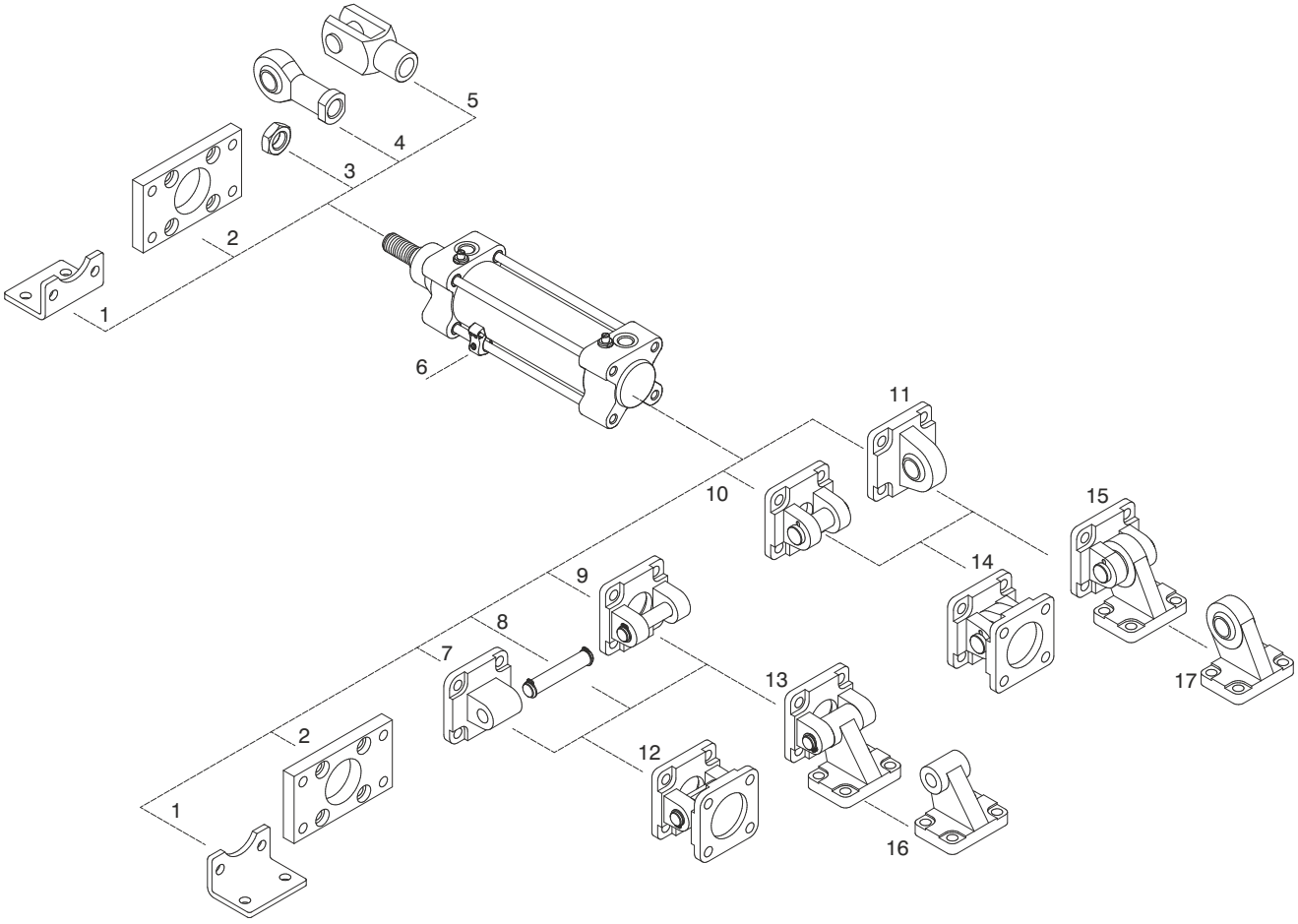

Position	Description	Ordering code	Materials
1	Short mounting foot brackets (MS1)	1393.Ø.05/1F	Stainless steel AISI 316
2	Flange (MF1-MF2)	1393.Ø.03F	Stainless steel AISI 316
3	Rod nut	1393.Ø.18F	Stainless steel AISI 316
4	Ball joint	1393.Ø.32F	Stainless steel
5	Fork	1393.Ø.13F	Stainless steel
6	Sensor bracket	1393._	Stainless steel AISI 316
7	Rear male clevis (MP4)	1393.Ø.09/1F	Stainless steel AISI 316
8	Pin (AA4) with circlips for rear clevis (MP2) (pos. 9)	1393.Ø.37F	Stainless steel AISI 316
9	Rear female clevis (MP2)	1393.Ø.09F	Stainless steel AISI 316
10	Rear narrow clevis (AB6)	1393.Ø.30F	Stainless steel AISI 316
11	Rear male clevis (with jointed head - MP6)	1393.Ø.15F	Stainless steel AISI 316
12	Standard complete trunnion (pos. 7 + pos. 9)	1393.Ø.22F	Stainless steel AISI 316
13	Square angle trunnion (pos. 9 + pos. 16)	1393.Ø.35F	Stainless steel AISI 316
14	Standard complete trunnion with jointed head (pos. 10 + pos.11)	1393.Ø.36F	Stainless steel AISI 316
15	Complete square angle trunnion (pos. 10 + pos.17)	1393.Ø.27F	Stainless steel AISI 316
16	Simple square counter clevis (AB7) (pos. 13)	1393.Ø.11/2F	Stainless steel AISI 316
17	Simple square counter clevis (pos. 15)	1393.Ø.28F	Stainless steel AISI 316

Sensor bracket

Ordering code
1393.A (Ø32 - Ø40) **1393.B** (Ø50 - Ø63) **1393.C** (Ø80 - Ø100)

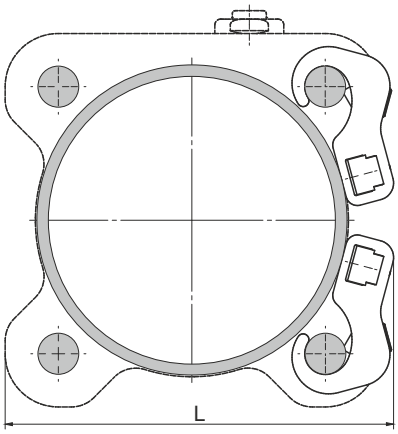

Fixing bracket made of stainless steel AISI 316 for sensor mounting on cylinders.

Sensors code **1580._**
MRS._
MHS._

Bore	L
Ø32	51
Ø40	57
Ø50	67
Ø63	79
Ø80	98
Ø100	115

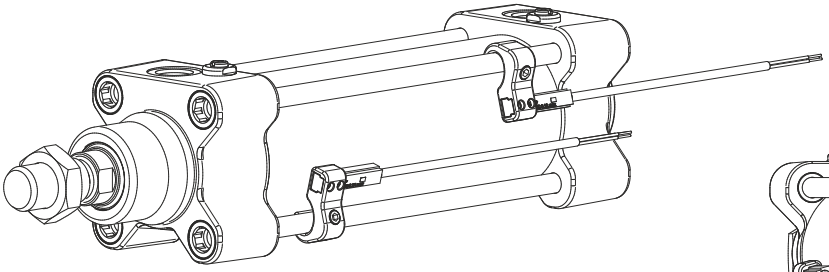

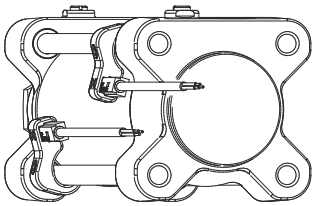

To mount the brackets on the tie rods use the dedicated stainless steel grub screw.

Front and rear flanges (MF1 - MF2)

Ordering code
1393.Ø.03F

Plate in stainless steel AISI 316 which allows anchorage of the cylinder at a right angle to the plane.

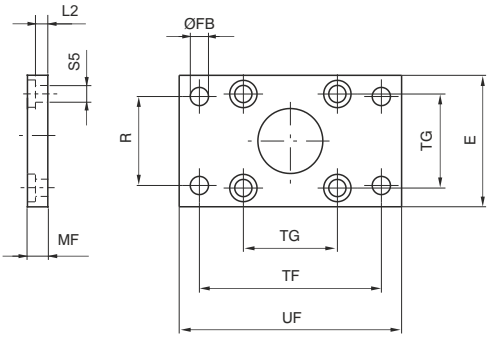

Front assembling

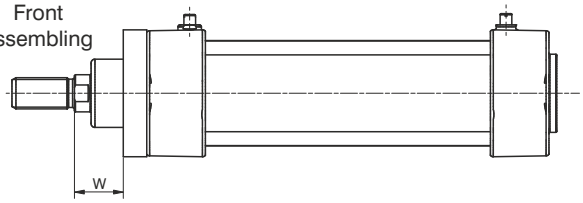

Rear assembling

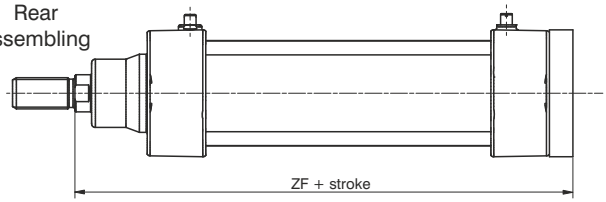

Bore	E	ØFB (H 13)	MF (JS 14)	R (JS 14)	TF (JS 14)	TG	UF	ZF	W	L2	ØS5	Weight (gr.)
32	45	7	10	32	64	32,5	80	130	16	5	6,6	190
40	52	9	10	36	72	38	90	145	20	5	6,6	250
50	65	9	12	45	90	46,5	110	155	25	6,5	9	480
63	75	9	12	50	100	56,5	120	170	25	6,5	9	620
80	95	12	15	63	126	72	150	189	31	7	11	1430
100	115	14	15	75	150	89	170	204	36	7	11	1990

Short mounting foot brackets (MS1)

Ordering code
1393.Ø.05/1F

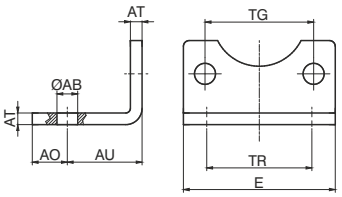

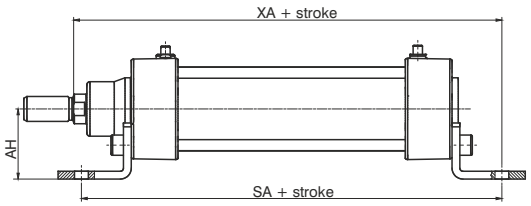

Elements used to anchor the cylinder parallel to the mounting plane. They are made of stainless steel AISI 316.

Bore	32	40	50	63	80	100
ØAB (H 14)	7	9	9	9	12	14
AH	32	36	45	50	63	71
AU (± 0.2)	24	28	32	32	41	41
AO	11	8	15	13	14	16
E	45	52	65	75	95	115
AT	4	4	5	5	6	6
SA	142	161	170	185	210	220
TG	32,5	38	46,5	56,5	72	89
TR (JS 14)	32	36	45	50	63	75
XA	144	163	175	190	215	230
Weight gr.	60	70	160	180	370	430

Rear clevis (MP2)

Ordering code
1393.Ø.09F

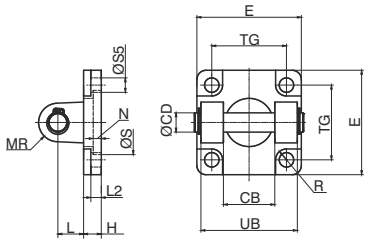

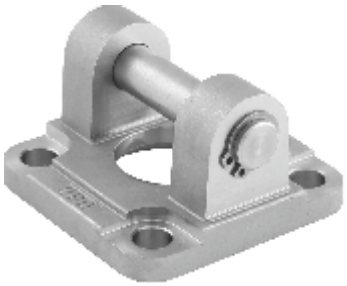

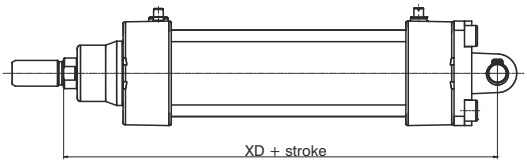

This type of mounting allows anchorage of the cylinder either parallel or right angle to plane; the cylinder rod can oscillate and self-align as necessary when under load. Made of stainless steel AISI 316.

Bore	32	40	50	63	80	100
CB (H 14)	26	28	32	40	50	60
ØCD	10	12	12	16	16	20
E	45	55	65	75	95	115
ØS (H11)	30	35	40	45	45	55
N	5	5	5	5	/	/
R (H13)	5,5	5,5	7,5	7,5	9	9
H	10	10	10	12	14	16
L	12	15	17	20	22	25
MR	10	12	12	16	16	20
TG	32,5	38	46,5	56,5	72	89
UB (h14)	45	52	60	70	90	110
XD	142	160	170	190	210	230
L2 (±0,5)	5,5	5,5	6,5	6,5	10	10
S5 (H13)	6,6	6,6	9	9	11	11
Weght gr.	140	230	370	540	1000	1700

Rear male clevis (MP4)

Ordering code
1393.Ø.09/1F

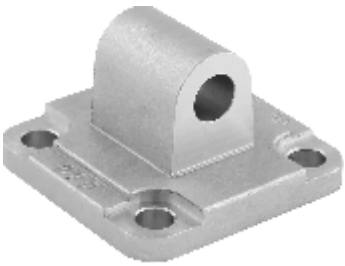

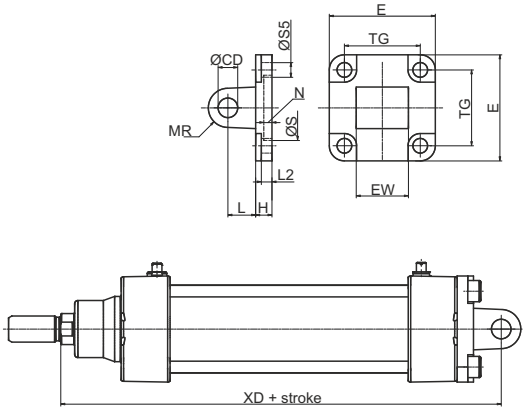

Similar to 09 clevis except for the connection, which is male rather than female. Used to mount the cylinder either parallel or at a right angle to the plane; the cylinder rod can oscillate and self-align as necessary when under load. Made of stainless steel AISI 316.

Bore	32	40	50	63	80	100
CD (H 9)	10	12	12	16	16	20
E	45	55	65	75	95	115
EW ($^{-0,2}_{-0,6}$)	26	28	32	40	50	60
H	10	10	10	12	14	16
L	12	15	17	20	22	25
ØS (H11)	30	35	40	45	45	55
N	5	5	5	5	/	/
R (H13)	5,5	5,5	7,5	7,5	9	9
MR	10	12	12	16	16	20
TG	32,5	38	46,5	56,5	72	89
XD	142	160	170	190	210	230
L2 (±0,5)	5,5	5,5	6,5	6,5	10	10
S5 (H13)	6,6	6,6	9	9	11	11
Weight gr.	180	280	370	680	1200	2100

Pin with circlips for rear clevis (MP4 and MP2)

Ordering code
1393.Ø.37F

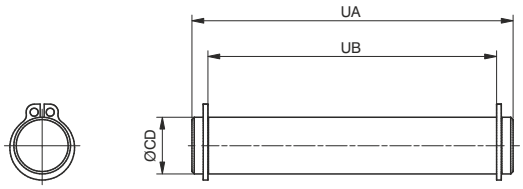

Stainless steel AISI 316 pin, complete with stainless steel circlips, which can be used with clevis code 1393.Ø.09/1F and 1393.Ø.09F

Bore	32	40	50	63	80	100
CD (e8)	10	12	12	16	16	20
UA	53	60	68	78	98	118
UB ($^{-0,5}_{-0}$)	46	53	61	71	91	111
Weight gr.	35	50	60	120	150	290

Standard complete trunnion

Ordering code
1393.Ø.22F Mounting consists of rear clevis code 1380.Ø09F +rear male clevis code 1380.Ø.09/1F (ordering separately)

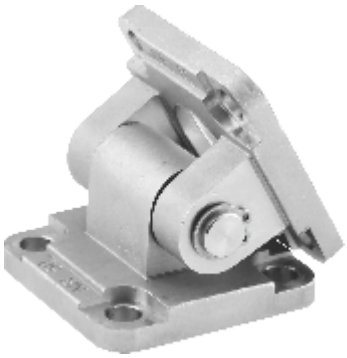

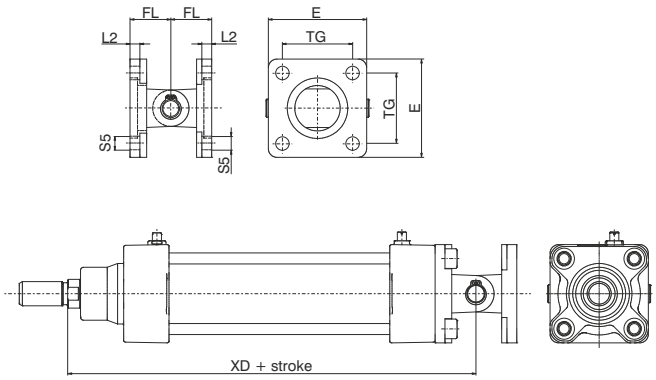

Made of stainless steel AISI 316.

Bore	32	40	50	63	80	100
E	45	55	65	75	95	115
FL	22	25	27	32	36	41
L 2 (±0,5)	5,5	5,5	6,5	6,5	10	10
S 5	6,6	6,6	9	9	11	11
TG	32,5	38	46,5	56,5	72	89
XD	142	160	170	190	210	230
Weight gr.	360	580	780	1370	2370	4110

Square angle trunnion (AB7)

Ordering code
1393.Ø.35F Counter clevis can be ordered separately with code 1393.Ø.11/2F

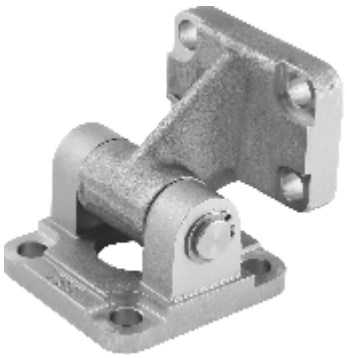

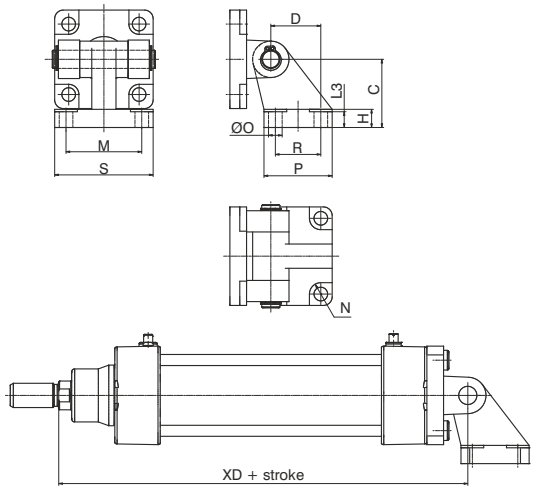

Made of stainless steel AISI 316.

Bore	32	40	50	63	80	100
D (JS 15)	21	24	33	37	47	55
C (JS 15)	32	36	45	50	63	71
H	8	10	12	12	14	15
N (H 13)	5,5	5,5	7,5	7,5	9	9
L3	6,5	8,5	10,5	10,5	11,5	12,5
R (JS 14)	18	22	30	35	40	50
P	31	35	45	50	60	70
O (H 13)	6,6	6,6	9	9	11	11
S	51	54	65	67	86	96
M (JS 14)	38	41	50	52	66	76
XD	142	160	170	190	210	230
Weight gr.	330	520	810	1200	2200	4710

Rear narrow clevis (AB6)

Ordering code
1393.Ø.30F

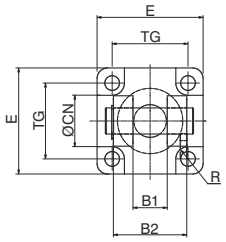

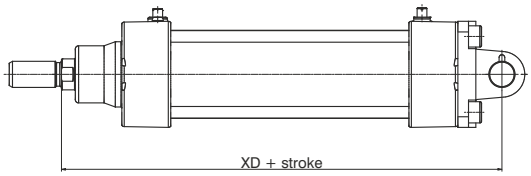

Utilised with clevis 1393.Ø.15F allows the cylinder to oscillate in all directions (see standard complete trunnion 1393.Ø.36F)
Made of stainless steel AISI 316.

Bore	32	40	50	63	80	100
B1 (H 14)	14	16	21	21	25	25
B2 (h 14)	34	40	45	51	65	75
ØCN	10	12	16	16	20	20
E	45	55	65	75	95	115
H	10	10	10	12	14	16
L	12	15	17	20	22	25
L2 (±0,5)	5,5	5,5	6,5	6,5	10	10
S5 (H 13)	6,6	6,6	9	9	11	11
TG	32,5	38	46,5	56,5	72	89
XD	142	160	170	190	210	230
ØS (H 12)	30	35	40	45	45	55
R (H 13)	5,5	5,5	7,5	7,5	9	9
N	5	5	5	5	5	5
Weight gr.	170	270	420	650	1380	2050

Rear male clevis (MP6) with jointed head according to DIN 648K standard

Ordering code
1393.Ø.15F

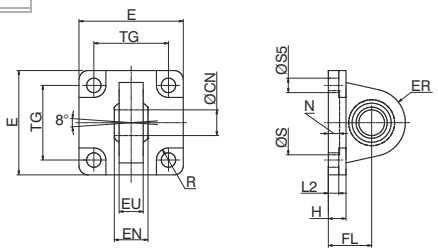

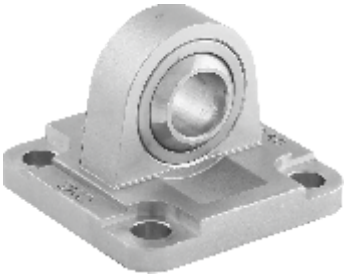

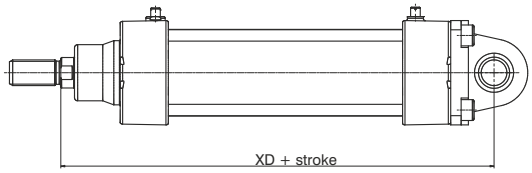

Utilised with clevis 1393.Ø.30F allows the cylinder to oscillate in all directions.
Made of stainless steel AISI 316.

Bore	32	40	50	63	80	100
ØCN (H 7)	10	12	16	16	20	20
E	45	55	65	75	95	115
EN (-0.1)	14	16	21	21	25	25
ER	15	18	20	23	27	30
EU	10,5	12	15	15	18	18
FL (JS 15)	22	25	27	32	36	41
H	10	10	10	12	14	16
L2	5,5	5,5	6,5	6,5	10	10
S5 (H 13)	6,6	6,6	9	9	11	11
TG	32,5	38	46,5	56,5	72	89
XD	142	160	170	190	210	230
ØS (H 11)	30	35	40	45	45	55
R (H 13)	5,5	5,5	7,5	7,5	9	9
N	5	5	5	5	5	5
Weight gr.	150	260	370	600	1130	1800

Standard complete trunnion with jointed head according to DIN 648K standard

Ordering code
1393.Ø.36F Mounting consists of rear narrow clevis code 1393.Ø.30F with rear male clevis code 1393.Ø.15F

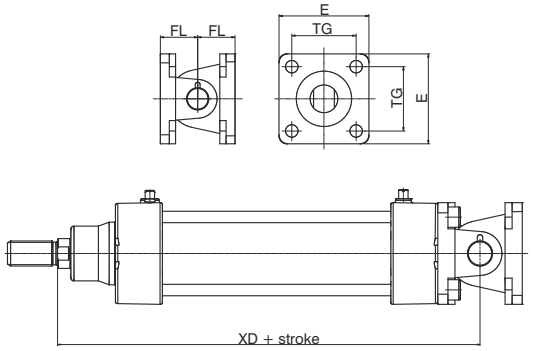

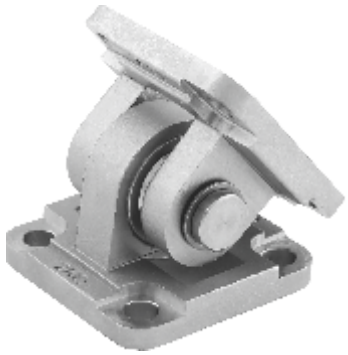

Made of stainless steel AISI 316.

Bore	32	40	50	63	80	100
E	45	55	65	75	95	115
FL (JS 15)	22	25	27	32	36	41
TG	32,5	38	46,5	56,5	72	89
XD	142	160	170	190	210	230
Weight gr.	320	530	790	1250	2510	3850

Complete square angle trunnion with joined head acc. to DIN 648K standards

Ordering code
1393.Ø.27F Mounting consist of rear narrow clevis cod. 1393.Ø.30F with Simple square counter clevis cod. 1393.Ø.28F (ordering separately)

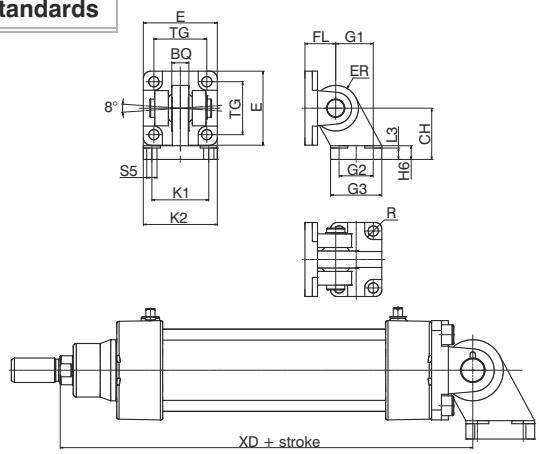

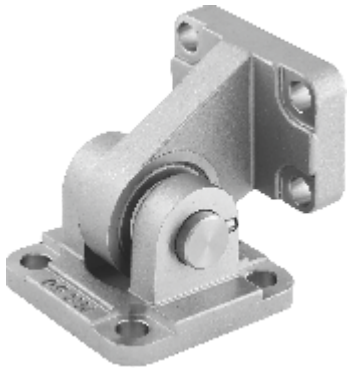

Made of stainless steel AISI 316.

Bore	32	40	50	63	80	100
CH (JS 15)	32	36	45	50	63	71
E	45	55	65	75	95	115
FL	22	25	27	32	36	41
G1 (JS 15)	21	24	33	37	47	55
G2 (JS 14)	18	22	30	35	40	50
G3	31	35	45	50	60	70
H6	10	10	12	12	14	15
K1 (JS 14)	38	41	50	52	66	76
K2	51	54	65	67	86	96
L3 ($^{+0,5}_{-0}$)	8,5	8,5	10,5	10,5	11,5	12,5
S5 (H13)	6,6	6,6	9	9	11	11
TG	32,5	38	46,5	56,5	72	89
XD	142	160	170	190	210	230
BQ	10,5	12	15	15	18	18
ER	15	18	20	23	27	30
R (H 13)	5,5	5,5	7,5	7,5	9	9
Weight gr.	350	540	880	1200	2350	3380

Rod fork and nuts

Ordering code
1393.Ø.13F
1393.Ø.18F

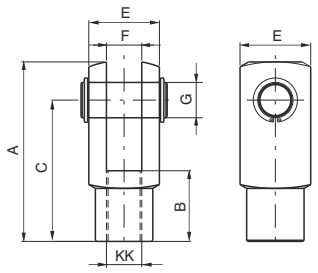

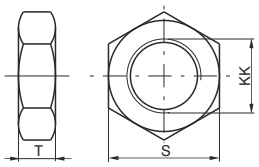

Fork:
Element that when screwed to the rod consents a regular functioning even when there are significant lateral forces as the connection point.
Made of stainless steel AISI 303.
Nut:
Used to block the position of the fork.
Made of stainless steel AISI 316.

Bore		32	40	50	63	80	100
A		52	62	83	83	105	105
B		20	24	32	32	40	40
C		40	48	64	64	80	80
E		20	24	32	32	40	40
F(B13)		10	12	16	16	20	20
G		10	12	16	16	20	20
S		17	19	24	24	30	30
T		6	7	8	8	9	9
KK		M10X1,25	M12X1,25	M16X1,5	M16X1,5	M20X1,5	M20X1,5
Weight	fork	100	140	340	340	680	680
gr.	nut	15	20	20	20	40	40

Ball joint

Ordering code
1393.Ø.32F

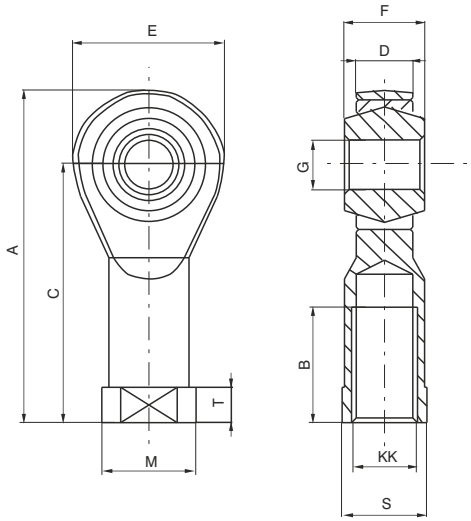

Ball joint:
Mounted on the rod thread, assures a regular operation even in the presence of significant forces to the linked element.
Made of stainless steel AISI 304 and 420.

Bore	32	40	50	63	80	100
A	57	66	85	85	102	102
B	20	22	28	28	33	33
C	43	50	64	64	77	77
D	10,5	12	15	15	18	18
E	28	32	42	42	50	50
F	14	16	21	21	25	25
G (H 7)	10	12	16	16	20	20
KK	M10x1,25	M12x1,25	M16x1,5	M16x1,5	M20x1,5	M20x1,5
M	19	22	27	27	34	34
S	17	19	22	22	30	30
T	6,5	6,5	8	8	10	10
Weight gr.	75	110	220	220	410	410

General

The piston rod lock devices are clamping units mounted on the microcylinders front head. They allow the piston rod to lock in any position.
Piston rod clamping is mechanically obtained by springs actuated purpose-made jaws. This method allows to lock the cylinder in the desired position, should the air pressure drop.
The piston rod lock device is not a safety device.

Construction characteristics

Mounting bracket	anodised aluminium
Body	anodised aluminium
Clamping jaws	hardened alloy copper
Piston	acetal resin
Seal	NBR Oil resistant rubber
Springs	springs steel

Technical characteristics

Fluid	filtered and lubricated air						
Working pressure	3 bar - 6 bar						
Working temperature	-5°C - +70°C						
Functioning	mechanical double jaws						
Locking	axial, two-direction (normally locked)						
Unlocking	pneumatic						
Clamping force with static load (microcylinders)	Ø12	Ø16	Ø20	Ø25	Ø32		
	180N	180N	350N	350N	600N		
Clamping force with static load (cylinders)	Ø32	Ø40	Ø50	Ø63	Ø80	Ø100	Ø125
	600N	1000N	1400N	2000N	5000N	5000N	7000N

"Attention: Dry air must be used for application below 0°C"

Use and maintenance

Operate within the specified technical characteristics.
The piston rod lock does not require maintenance if properly utilised.
The working inlet port has to be pressurised for assembling the piston rod lock device on cylinder. Alternatively adjust the jaws with screw located on connection.
Spare parts are not available.

Microcylinders for piston rod lock

Threaded end covers version

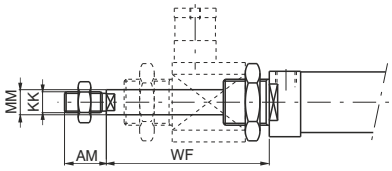

Ordering code
12_ _.Ø.stroke.B

Order piston rod lock separately. Do not use with stainless steel or hexagonal piston rod.

Cylinders for piston rod lock

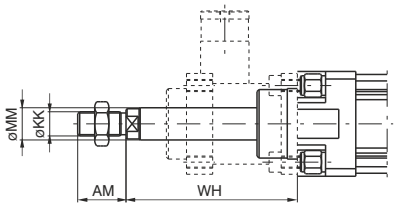

Order piston rod lock separately. Do not use with stainless steel piston rod.

Ordering code
13 – –.Ø.stroke.– –.B

Piston rod lock complete

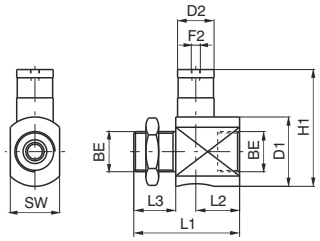

Do not use as safety device

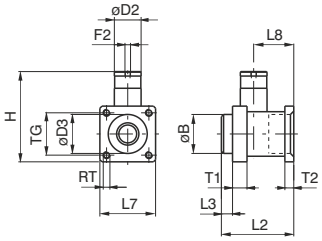

Ordering code	Ø	12	16	20	25	32
1260.Ø.51BS	Weight gr.	82	82	140	140	188

Ordering code	Ø	32	40	50	63	80	100	125
1320.Ø.51BS	Weight gr.	191	276	535	852	1772	2412	5250

Piston rod lock bracket

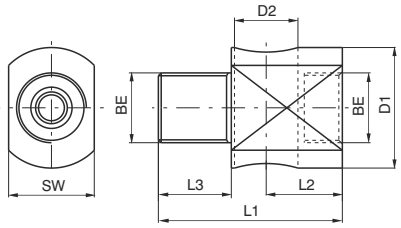

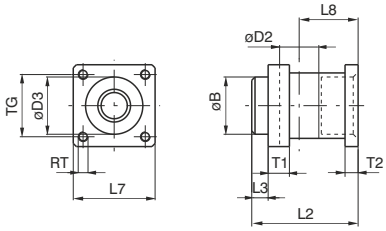

Ordering code	Ø	12	16	20	25	32
1260.Ø.51S	Weight gr.	60	60	85	85	133

Ordering code	Ø	32	40	50	63	80	100	125
1320.Ø.51S	Weight gr.	142	171	360	486	1060	1700	3500

Piston rod lock and housing

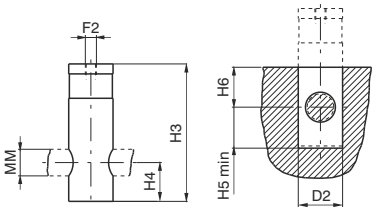

Do not use as safety device

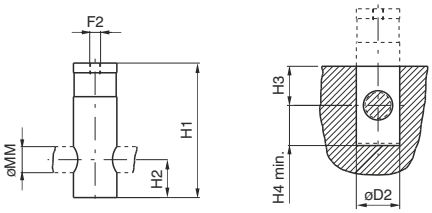

Ordering code	Ø	12	16	20	25	32
1260.Ø.51B (Ø12-Ø25)	Weight gr.	22	22	55	55	55
1320.32.51B (Ø32)						

Ordering code	Ø	32	40	50	63	80	100	125
1320.Ø.51B	Weight gr.	49	105	175	366	712	712	1750

Table of dimensions (series 1200)

Bore	AM	BE	D1	D2	F2	H1	H3	H4	H5	H6	KK	L1	L2	L3	MM	SW	WF
12	16	M16x1.5	20	16	M5	35	35	10	11	10	M6x1	42	21	12	6	20	55
16	16	M16x1.5	20	16	M5	35	35	10	11	10	M6x1	42	21	12	6	20	55
20	20	M22x1.5	38	20	M5	64	62	17.5	19	18	M8x1.25	58	24	23	8	27	73
25	22	M22x1.5	38	20	M5	64	62	17.5	19	18	M10x1.25	58	24	23	10	27	77
32	20	M30x1.5	39.5	20	M5	64	62	17.5	18.5	18	M10x1.25	60	26	22	12	35	76.5

Table of dimensions (series 1300)

Bore	AM	B	D2	D3	F2	H	H1	H2	H3	H4	KK	L2	L3	L7	L8	MM	RT	T1	T2	TG	WH
32	22	30	20	30.5	M5	67	62	17.5	18	18.5	M10x1.25	58	10	45	31.5	12	M6	13	8	32.5	74
40	24	35	24	35	G 1/8”	86	83	22	22	23	M12x1.25	65	10	50	36	16	M6	13	8	38	85
50	32	40	30	40	G 1/8”	105	100	25	25	26	M16x1.5	82	12	60	45.5	20	M8	16	15	46.5	107
63	32	45	38	45	G 1/8”	121	116	30	30	31	M16x1.5	82	12	70	49.5	20	M8	16	15	56.5	107
80	40	45	48	45	G 1/8”	164	155	36	36	37	M20x1.5	110	20	90	61	25	M10	20	18	72	126
100	40	55	48	55	G 1/8”	172	155	36	36	37	M20x1.5	115	23	105	65	25	M10	20	18	89	143
125	54	60	65	60	G 1/8”	210	195	56	55	56	M27x2	167	45	140	86.5	32	M12	30	22	110	187

General

Profiled tube has two "T" slots on the side hosting sensors 1580._, MRS._, MHS._. without adaptors. Two additional connections are also available on rear cover for cylinder feeding.

Construction characteristics

End plates	aluminium anodised
Rod	C43 chromed steel or stainless steel
Barrel	aluminium alloy anodised
Piston	acetal resin, aluminium on request
Piston-seal	PUR
Rod-seal	PUR (FPM upon request)
Adjusting screw	zinc plated steel
Shock absorber	NBR

Technical characteristics

Fluid	filtered air, with or without lubrication (If lubricated the lubrication must be continuous)
Max. pressure	10 bar
Operating temperature	-5° C - +70°C

Please follow the suggestions below to ensure a long life for these cylinders:
- use clean and lubricated air
- correct alignment during assembly with regard to the applied load so as to avoid radial components or bending the rod;
- avoid high speeds together with long strokes and heavy loads: this would produce kinetic energy which the cylinder cannot absorb, especially if used as a limit stop (in this case use mechanical stop device and aluminium piston);
- evaluate the environmental characteristics of cylinder used (high temperature, hard atmosphere, dust, humidity etc.)

Please note: air must be dried for applications with lower temperature.
Use hydraulic oils H class (ISO VG32) for correct continued lubrication.
Our Technical Department will be glad to help.

4

Maximum standard strokes

Size 25	200 mm
Size 32 - 63	300 mm

Sections (cm^2)

Size	25	32	40	50	63
Out stroke (cm^2)	5.28	8.09	13.09	20.28	32.68
In stroke (cm^2)	4.49	6.96	11.08	17.14	29.54

In order to calculate the theoretical force generated by the unit, both outstroke and instroke, it is necessary to use the following equation
FORCE(Kg) = Surface (cm^2) x Pressure(bar)
It is also necessary to remember that the theoretical force must be reduced by 10-15% in order to account for the unit internal friction.

Maximum rod radial movement (°)

Size	25	32	40	50	63
rod radial movement	±0.8	±0.7	±0.6	±0.5	±0.4

Maximum torque applicable on the piston rod (Nm):

Size	25	32	40	50	63
Maximum torque	0.8	1	1.3	1.8	2.1

The maximum torque values must also be accounted for while mounting accessories on the piston rod.

Basic version “1” female rod

Ordering code
SIDE CONNECTION
1370.size.stroke.1 Magnetic chrome plated rod
1371.size.stroke.1 Magnetic stainless steel rod
1372.size.stroke.1 Non magnetic chrome plated rod
1373.size.stroke.1 Non magnetic stainless steel rod
REAR CONNECTION
1370.size.stroke.1.P Magnetic chrome plated rod
1371.size.stroke.1.P Magnetic stainless steel rod
1372.size.stroke.1.P Non magnetic chrome plated rod
1373.size.stroke.1.P Non magnetic stainless steel rod

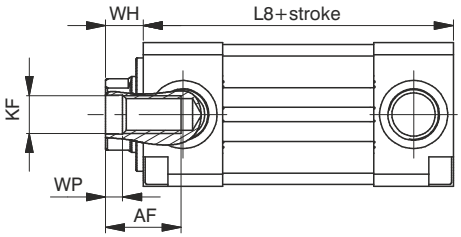

Basic version “2” male rod

Ordering code
SIDE CONNECTION
1370.size.stroke.2 Magnetic chrome plated rod
1371.size.stroke.2 Magnetic stainless steel rod
1372.size.stroke.2 Non magnetic chrome plated rod
1373.size.stroke.2 Non magnetic stainless steel rod
REAR CONNECTION
1370.size.stroke.2.P Magnetic chrome plated rod
1371.size.stroke.2.P Magnetic stainless steel rod
1372.size.stroke.2.P Non magnetic chrome plated rod
1373.size.stroke.2.P Non magnetic stainless steel rod

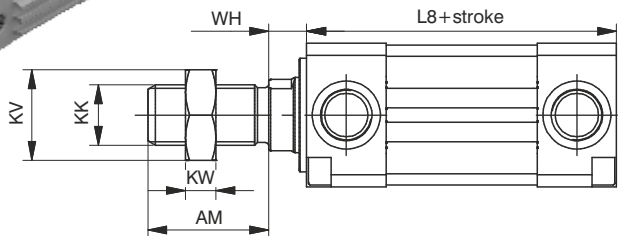

Female Push/Pull version “3”

Ordering code
1370.size.stroke.3 Magnetic chrome plated rod
1371.size.stroke.3 Magnetic stainless steel rod
1372.size.stroke.3 Non magnetic chrome plated rod
1373.size.stroke.3 Non magnetic stainless steel rod

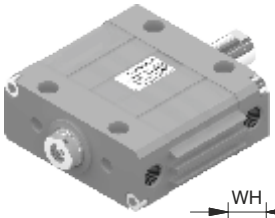

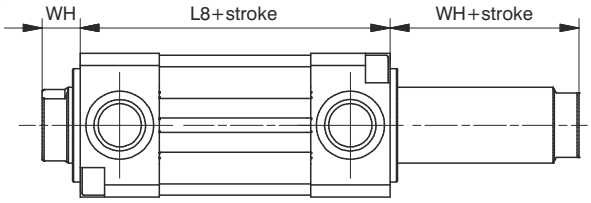

Male Push/Pull version “4”

Ordering code
1370.size.stroke.4 Magnetic chrome plated rod
1371.size.stroke.4 Magnetic stainless steel rod
1372.size.stroke.4 Non magnetic chrome plated rod
1373.size.stroke.4 Non magnetic stainless steel rod

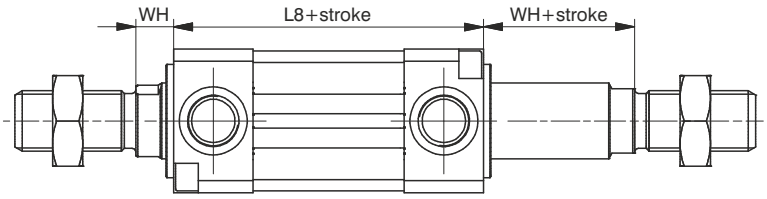

Variants

Ordering code
137_.size.stroke._.K = Version with aluminium piston

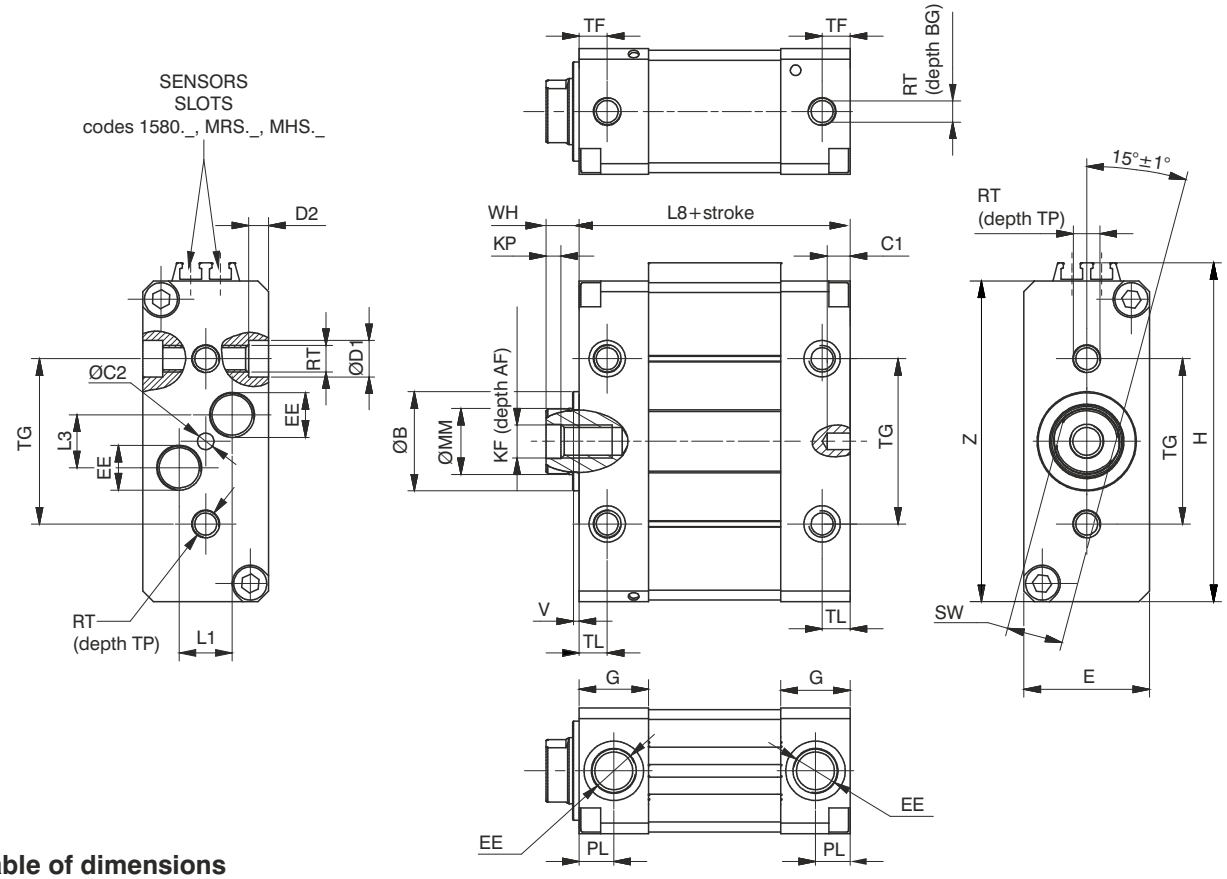

Table of dimensions

Size				25	32	40	50	63
AM				22	22	24	32	32
AF				12	14	16	20	20
Ø B (h9)				16	20	25	30	30
BG				8	9	9	12	14
C1				7	7	7	7	7
C2 (H9)				4	4	4	5	5
Ø D1				8	10	10	11	15
D2				4	4	5	6	6
E				20	24	30	38	50
EE				M5	G1/8"	G1/8"	G1/4"	G1/4"
G				12	17	17	21	21
H				56,5	65,5	82,5	102,5	127
KF				M5	M6	M8	M10	M10
KK				M10x1,25	M10x1,25	M12x1,25	M16x1,5	M16x1,5
KP				2	2,5	3	4,5	4,5
KV				17	17	19	24	24
KW				6	6	7	8	8
L1				6	7,5	7,5	16	19
L3				10	14,5	14,5	16	21
L8				62	72	76	82	82
Ø MM				10	12	16	20	20
PL				6,5	8,5	8,5	10,5	10,5
RT				M5	M6	M6	M8	M10
SW (H13)				8	10	13	17	17
TF				5	8,5	8,5	8,5	8,5
TG				25	32	40	50	60
TL				5	8,5	8,5	8,5	8,5
TP				8	9	9	12	14
V				2	2	2	2	2
VG				30	30	33	42	42
WH				8	8	9	10	10
Z				51	60	77	97	1215
Weight gr.	Versions	1	stroke 0	180	285	482	848	1350
		2	stroke 0	203	309	520	929	1431
	every 10 mm			22	29	49	79	118
Weight gr.	Versions	3	stroke 0	195	314	534	959	1478
		4	stroke 0	242	362	610	1096	1615
	every 10 mm			28	38	65	103	143

Front and rear flange

Ordering code
1370.size.03

Size 25-32-40

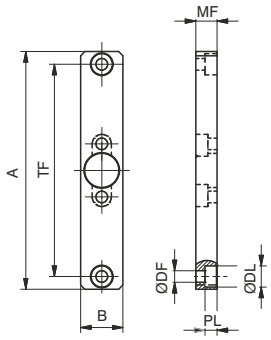

Size 50-63

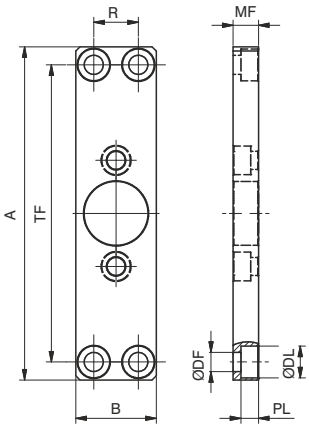

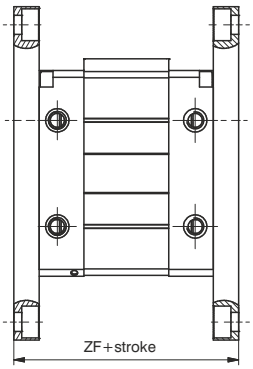

Plate which allows anchorage of the cylinder at a right angle to the plane. Mounted to the cylinder by screws.

Size	25	32	40	50	63
A	112	130	146	157	157
B	20	24	30	38	50
ØDF	5.5	6.6	6.6	9	9
ØDL	10	11	11	15	15
PL	5.7	6.5	6.3	8.3	8.3
MF	10	10	10	12	15
R	/	/	/	21	33
TF	100	115	132	140	140
ZF	82	92	96	106	112

Foot bracket

Ordering code
1370.size.05/1F (n° 1 piece)

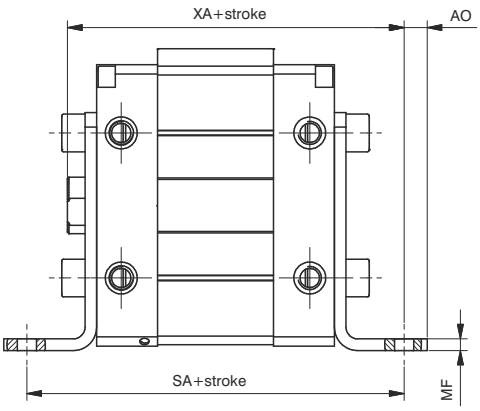

Size 25

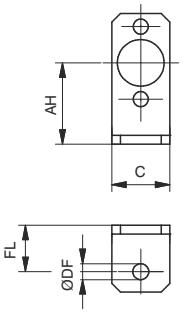

Size 25-40-50-63

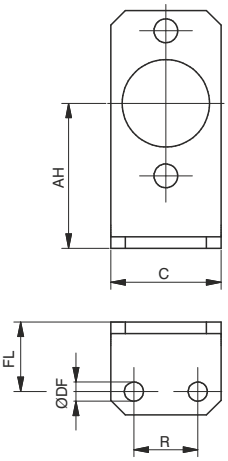

Brackets used to anchor the cylinder parallel to the mounting plane. Manufactured from steel with a rust proof protective treatment. Mounted to the cylinder end caps with bolts.

Size	25	32	40	50	63
AH	28	32	40	50	63
AO	7	5.5	7	8	10
C	20	24	30	38	50
ØDF	5.5	5.5	5.5	6.6	9
FL	16	18	20	24	27
MF	3	3	4	4	4
R	/	13	16	22	30
SA	94	108	116	130	136
XA	86	98	105	116	119

Rear male clevis

Ordering code
1370.size.09/1F

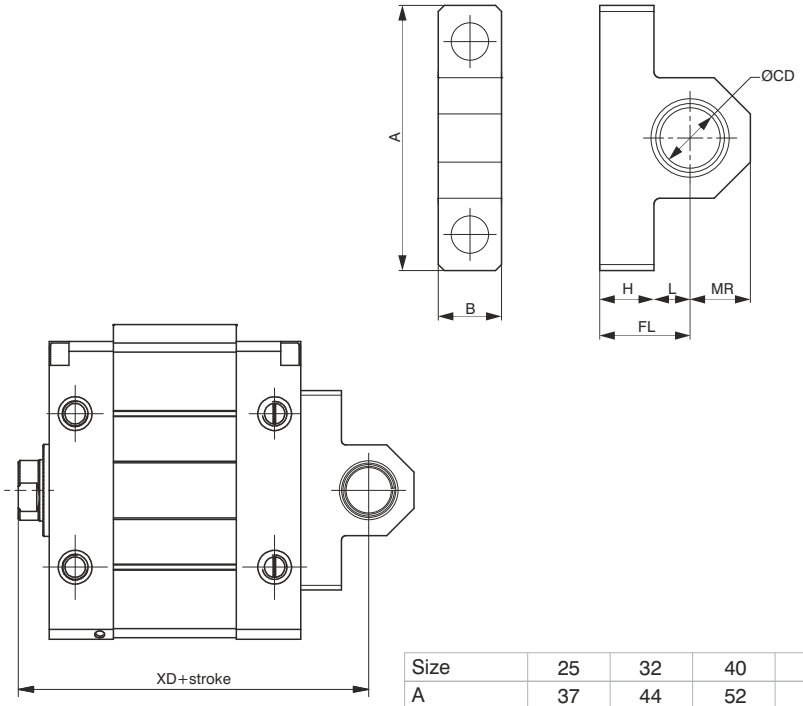

This type of mounting allows anchorage of the cylinder either parallel or right angle to plane; the cylinder rod can oscillate and self-align as necessary when under load.

Size	25	32	40	50	63
A	37	44	52	65	78
B	9	10.5	10.5	20	25
ØCD (H7)	8	10	12	12	16
FL	14	15	18	20	24
H	6	9	9	11	11
L	8	6	9	9	13
MR	7.5	10	13	13	17
XD	84	95	103	112	116

Rear clevis

Ordering code
1370.size.09F

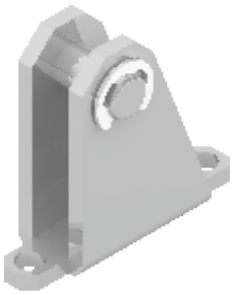

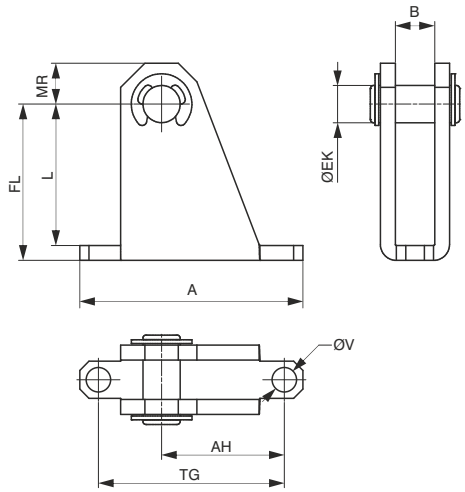

To be used in conjunction with 09/1 clevis. Similar to type 08 but includes a hinge pin. This type of mounting allows anchorage of the cylinder either parallel or right angle to plane; the cylinder rod can oscillate and self-align as necessary when under load. Manufactured from sheet metal with rust proof protective treatment.

Size	25	32	40	50	63
A	49	60	60	46	60
AH	25.5	33	29.5	24	32
B	9.1	10.6	10.6	20.1	25.1
ØEK	8	10	12	12	16
FL	35	42	51	55	68
L	32	38	47	50	63
MR	9.5	11	14	14	18
TG	40	50	50	30	40
ØV	5.5	6.6	6.6	9	11

Fork

Ordering code
1320.32.13F (for ø25 and ø32) **1320.40.13F** (for ø40) **1320.50.13F** (for ø50) **1320.63.13F** (for ø63)

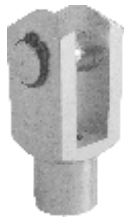

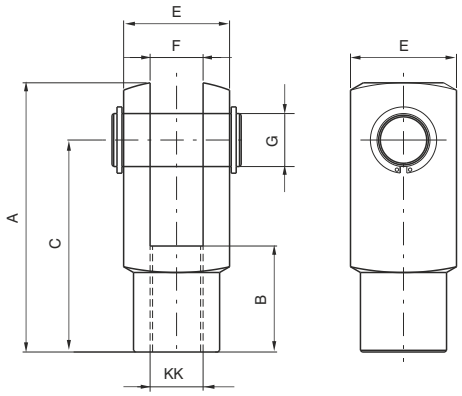

Fork with a clips

Ordering code
1320.32.13/1F (for ø25 and ø32) **1320.40.13/1F** (for ø40) **1320.50.13/1F** (for ø50) **1320.63.13/1F** (for ø63)

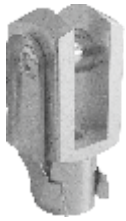

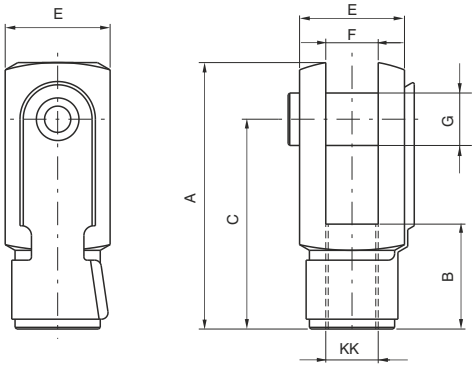

Nut

Ordering code
1320.32.18F (for ø25 and ø32) **1320.40.18F** (for ø40) **1320.50.18F** (for ø50) **1320.63.18F** (for ø63)

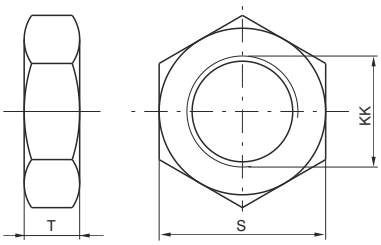

Fork:
Element that when screwed to the rod consents a regular functioning even when there are significant lateral forces as the connection point. Made of zinc-plated steel.
Nut:
Used to block the position of the fork.

Bore		25	32	40	50	63
A		52	52	62	83	83
B		20	20	24	32	32
C		40	40	48	64	64
E		20	20	24	32	32
F(B12)		10	10	12	16	16
G		10	10	12	16	16
S		17	17	19	24	24
T		6	6	7	8	8
KK		M10X1.25	M10X1.25	M12X1.25	M16X1.5	M16X1.5
Weight	forks	100	100	140	340	340
gr.	nut	15	15	20	20	20

Ball joint

Ordering code

1320.32.32F
(for ø25 and ø32)
1320.40.32F
(for ø40)
1320.50.32F
(for ø50)
1320.63.32F
(for ø63)

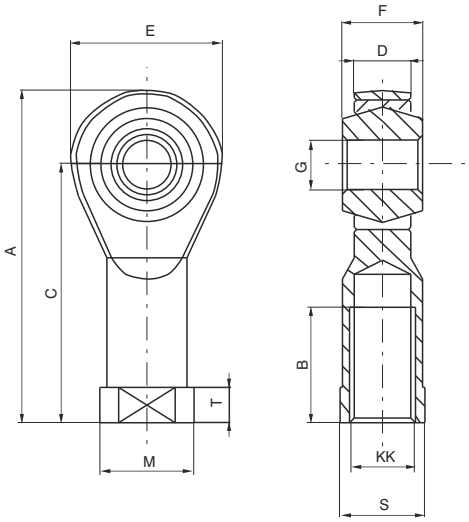

Bore	25	32	40	50	63
A	57	57	66	85	85
B	20	20	22	28	28
C	43	43	50	64	64
D (-0,1)	10.5	10.5	12	15	15
E	28	28	32	42	42
F	14	14	16	21	21
G (H 7)	10	10	12	16	16
KK	M10x1.25	M10x1.25	M12x1.25	M16x1.5	M16x1.5
M	19	19	22	27	27
S	17	17	19	22	22
T	6.5	6.5	6.5	8	8
Weight gr.	76	76	110	220	220

Self-aligning joint

Ordering code

1320.32.33F
(for ø25 and ø32)
1320.40.33F
(for ø40)
1320.50.33F
(for ø50)
1320.63.33F
(for ø63)

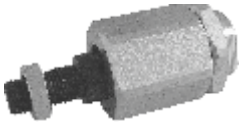

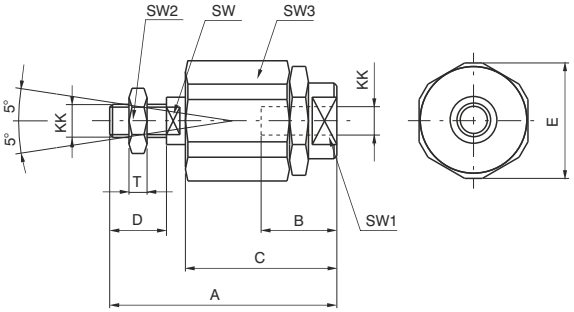

Bore	25	32	40	50	63
A	71	71	75	103	103
B	20	20	20	32	32
C	46	46	46	63	63
D	20	20	24	32	32
E	32	32	32	45	45
KK	M10x1,25	M10x1,25	M12x1,25	M16x1,5	M16x1,5
SW	12	12	12	20	20
SW1	19	19	19	27	27
SW2	17	17	19	24	24
SW3	30	30	30	41	41
T	6	6	7	8	8
Weight gr.	220	220	230	660	660

General

The SKIP and STOP valves are pneumatically actuated 2 ways poppet valves. The SKIP valve (accelerating device) is normally open and is equipped with a supplementary regulator for maximum speed control. It must be activated to obtain speed regulation.
The STOP valve can be normally closed or normally open.

Construction characteristics

Covers	black anodised aluminium
Barrels	bright painted drawn steel
Rod	C43 chromed steel
Tie rods	plated zinc steel
Piston	aluminium
Waterproof seals	NBR rubber
Piston seal	FPM
Rod seal	PUR
Regulators group	brass
Skip and stop valves	black anodised aluminium
Circuit oil	hydraulic with viscosity 2.9° E at 50°C (viscosity index minimum 118)
Bore	40 mm and 63 mm diameter

Technical characteristics

Max connecting load	600 kg (Ø40) -1200 Kg (Ø63)
Min. and max. speed	60 - 10000 mm/min.
Working temperature	-5°C - +70°C
Minimum pressure for the actuation of skip and stop valves	4 bar

"Attention: Dry air must be used for application below 0°C"

Standard strokes

50 - 100 - 150 - 200 - 250 - 300 - 350 - 400 - 450 - 500 mm
minimum stroke for type 1400.stroke.03.05 and 1400.stroke.03.06, 150 mm.

Important: For heavier load we have available the hydraulic speed control check cylinders of 63 mm diameter suitable to withstand loads up to 1200 kg. For more information please contact our technical department.

Maintenance

The speed control check is a closed system and there are no external factors that can adversely affect its function. Care however, has to be exercised not to allow the hydraulic fluid level to drop below the minimum indicated on the auxiliary tank. Should this occur, cavitation, or worse, an air pocket would result causing erratic control. Additional fluid should be put in exclusively through a unidirectional valve by means of an appropriate syringe (such as our code number 1400.99.01). Excess fluid will be expelled through a vent into an appropriate container. It is necessary to completely disassemble the regulator and be sure to bleed the system to eliminate air pockets. We suggest that you create a vacuum before beginning to refill. This can be done with a small unidirectional valve turned up and repeatedly loaded with a syringe. The rod must be manually actuated successively releasing air through the valve using a small and pointed instrument.

Functional schematics

Outward Stroke Control

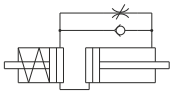

1400.Ø.stroke.01.2
1400.40.stroke.01.1

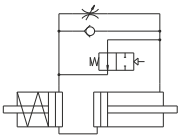

1400.Ø.stroke.01.04

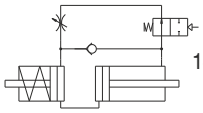

1400.Ø.stroke.01.05

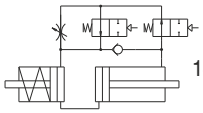

1400.Ø.stroke.01.06

Inward Stroke Control

1400.Ø.stroke.02.2

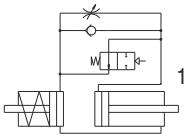

1400.Ø.stroke.02.04

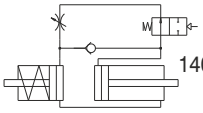

1400.Ø.stroke.02.05

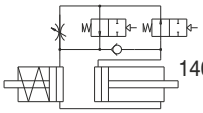

1400.Ø.stroke.02.06

Inward & Outward Stroke Control

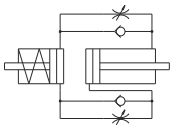

1400.Ø.stroke.03.2

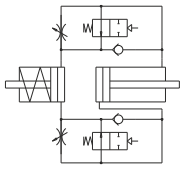

1400.Ø.stroke.03.04

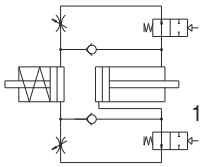

1400.Ø.stroke.03.05

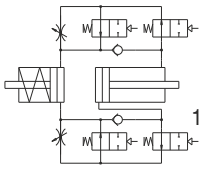

1400.Ø.stroke.03.06

Regulation on the outward stroke - Tank in line

Ordering code

1400.40.stroke.01.1

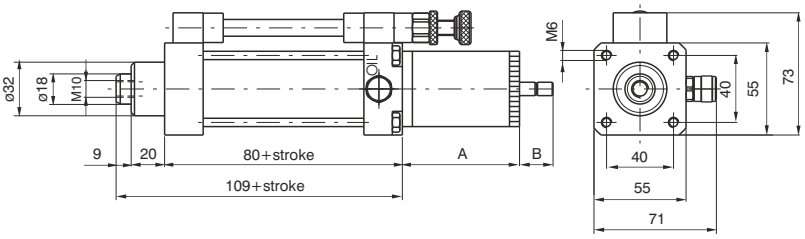

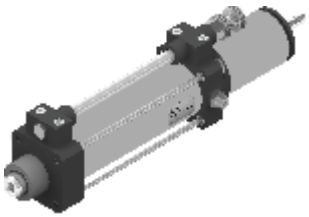

Strokes	A	B max.
< 75	78	30
75 - <150	102	45
150 - <250	127	60
250 - <350	187	90
350 - <500	202	120

Weight gr.1450 + gr. 300 every 50 mm. stroke

Regulation on the outward stroke – Lateral tank

Ordering code

1400.40.stroke.01.2

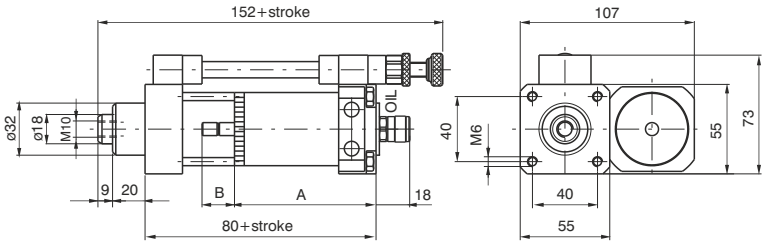

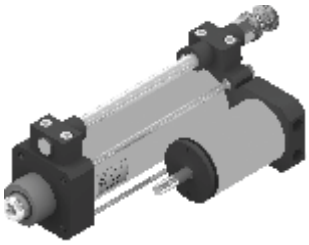

Strokes	A	B max.
< 75	93	30
75 - <150	118	45
150 - <250	143	60
250 - <350	183	90
350 - <500	218	120

Weight gr. 1530 + gr. 300 every 50 mm. stroke

Regulation on the inward stroke

Ordering code

1400.40.stroke.02.2

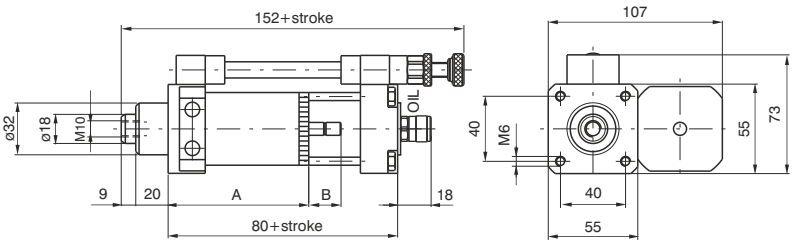

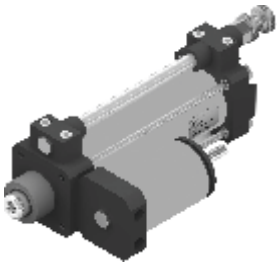

Strokes	A	B max.
< 75	93	30
75 - <150	118	45
150 - <250	143	60
250 - <350	183	90
350 - <500	218	120

Weight gr. 1530 + gr. 300 every 50 mm. stroke

Regulation in both directions

Ordering code
1400.40.stroke.03.2

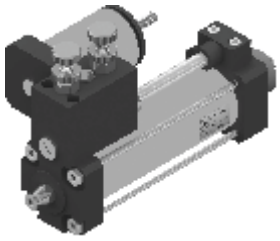

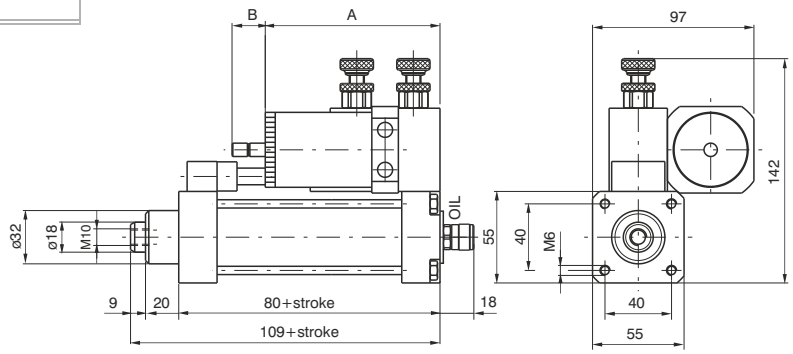

Weight gr. 1870 + gr. 300 every 50 mm. stroke

Attention: Minimum stroke=150mm when fitted in tandem (parallel or in-line) with 1319-1320-1321 cylinders series Ø80mm or Ø100mm.

Strokes	A	B max.
< 75	110	30
75 - <150	135	45
150 - <250	160	60
250 - <350	200	90
350 - <500	235	120

Regulation on the outward stroke with skip
(Acceleration valve)

Ordering code
1400.40.stroke.01.04

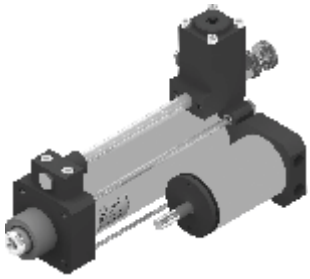

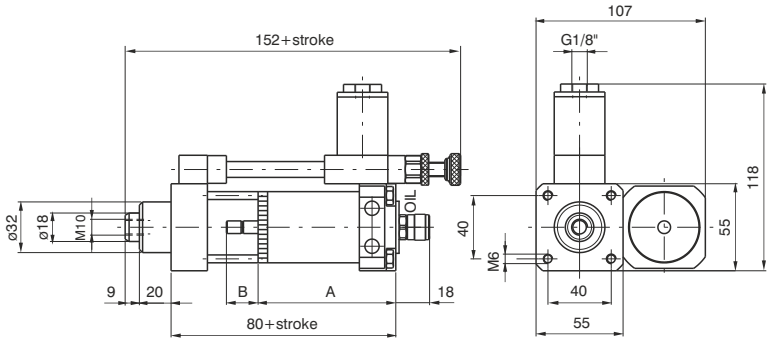

Weight gr. 1670 + gr. 300 every 50 mm. stroke

Strokes	A	B max.
< 75	93	30
75 - <150	118	45
150 - <250	143	60
250 - <350	183	90
350 - <500	218	120

Regulation on the outward stroke with stop
(Stop valve)

Ordering code
1400.40.stroke.01.05

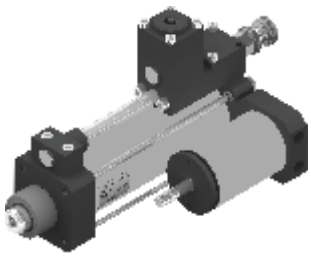

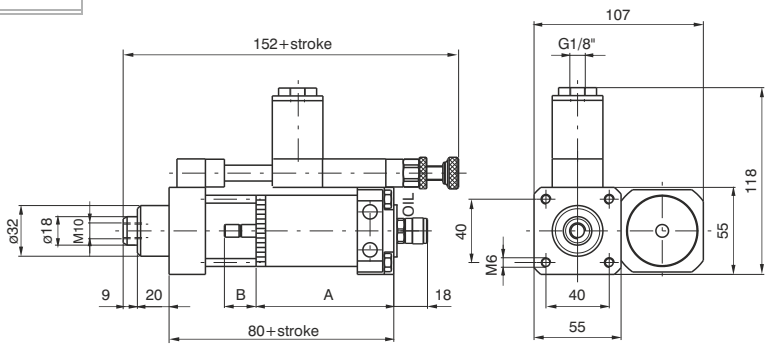

Weight gr. 1710 + gr. 300 every 50 mm. stroke

Strokes	A	B max.
< 75	93	30
75 - <150	118	45
150 - <250	143	60
250 - <350	183	90
350 - <500	218	120

Regulation on the outward stroke with skip and stop
(Acceleration and stop valves)

Ordering code
1400.40.stroke.01.06

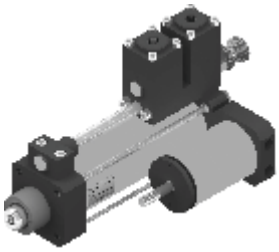

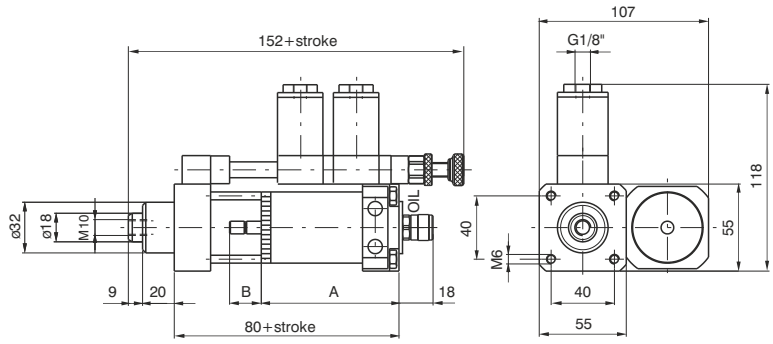

Strokes	A	B max.
< 75	93	30
75 - <150	118	45
150 - <250	143	60
250 - <350	183	90
350 - <500	218	120

Weight gr. 1830 + gr. 300 every 50 mm. stroke

Regulation on the inward stroke with skip
(Acceleration valve)

Ordering code
1400.40.stroke.02.04

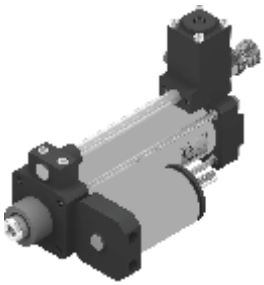

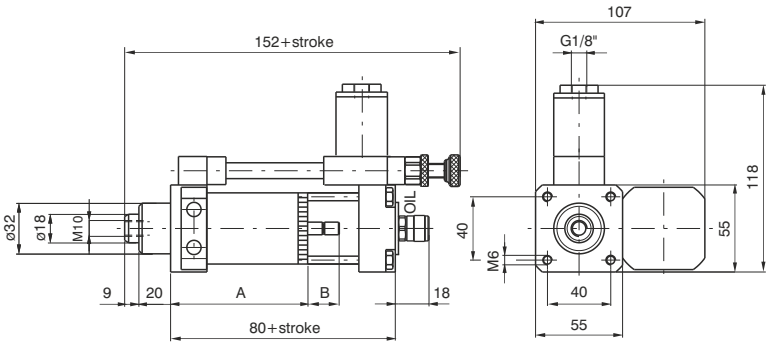

Strokes	A	B max.
< 75	93	30
75 - <150	118	45
150 - <250	143	60
250 - <350	183	90
350 - <500	218	120

Weight gr.1670 + gr. 300 every 50 mm. stroke

Regulation on the inward stroke with stop
(Stop valve)

Ordering code
1400.40.stroke.02.05

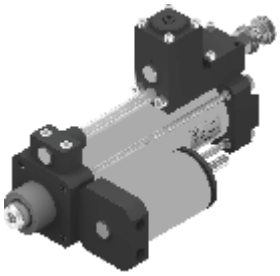

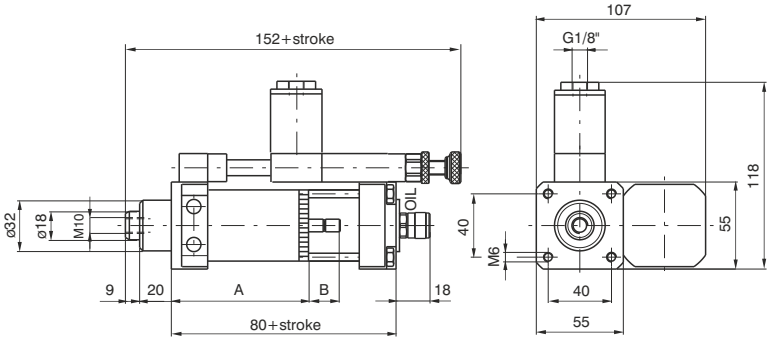

Strokes	A	B max.
< 75	93	30
75 - <150	118	45
150 - <250	143	60
250 - <350	183	90
350 - <500	218	120

Weight gr. 1710 + gr. 300 every 50 mm. stroke

Regulation on the inward stroke with skip and stop
(Acceleration and stop valves)

Ordering code
1400.40.stroke.02.06

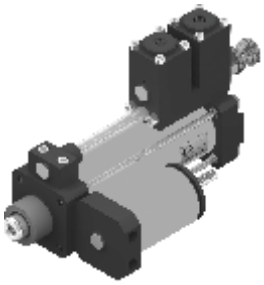

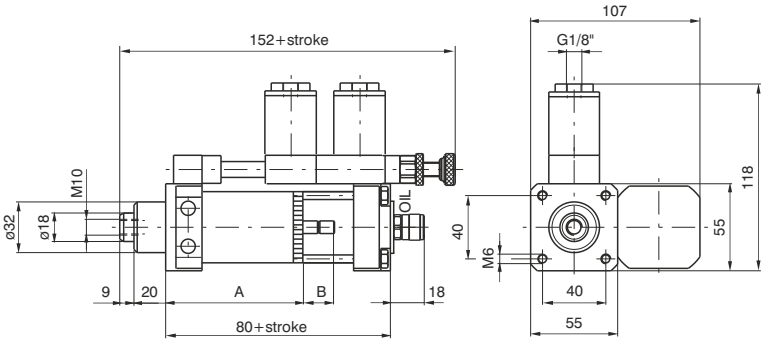

Strokes	A	B max.
< 75	93	30
75 - <150	118	45
150 - <250	143	60
250 - <350	183	90
350 - <500	218	120

Weight gr. 1830 + gr. 300 every 50 mm. stroke

Regulation in both directions with skip
(Acceleration valves in both directions)

Ordering code
1400.40.stroke.03.04

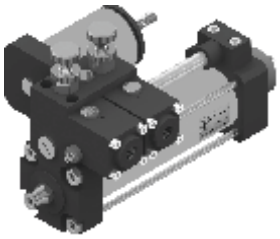

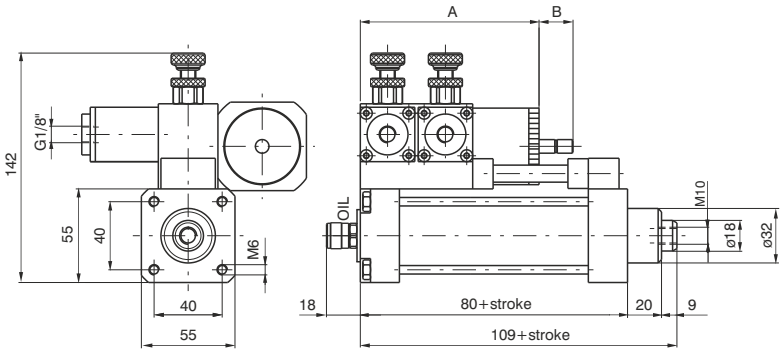

Attention: Minimum stroke=150mm when fitted in tandem (parallel or in-line) with 1319-1320-1321 cylinders series Ø80mm or Ø100mm.

Strokes	A	B max.
< 75	110	30
75 - <150	135	45
150 - <250	160	60
250 - <350	200	90
350 - <500	235	120

Weight gr. 2110 + gr. 300 every 50 mm. stroke

Regulation in both directions with stop
(Stop valves in both directions)

Ordering code
1400.40.stroke.03.05

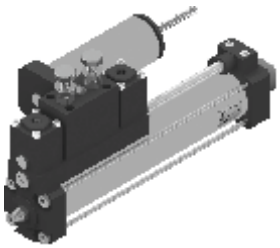

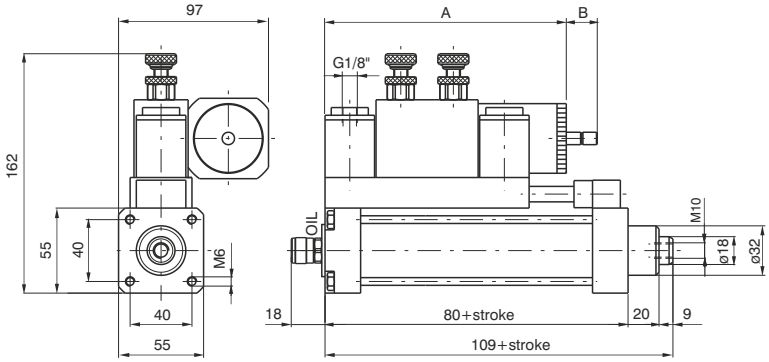

Strokes	A	B max.
150 - <250	197	60
250 - <350	237	90
350 - <500	272	120

Min. stroke 150 mm
Weight gr. 2390 + gr. 300 every 50 mm. stroke

Regulation in both directions with skip and stop
(Acceleration and stop valves in both directions)

Ordering code
1400.40.stroke.03.06

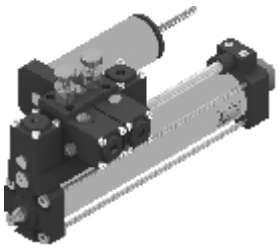

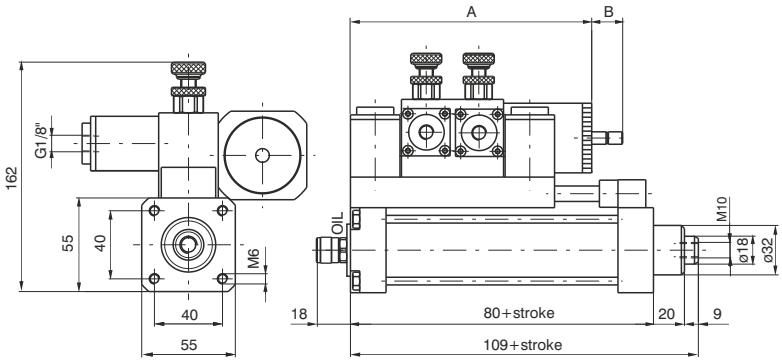

Strokes	A	B max.
150 - < 250	197	60
250 - < 350	237	90
350 - < 500	272	120

Min. stroke 150 mm
Weight gr. 2630 + gr. 300 every 50 mm. stroke

4

Regulation on the outward stroke – Lateral tank

Ordering code
1400.63.stroke.01.2

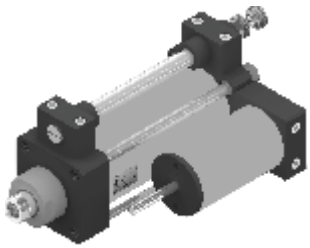

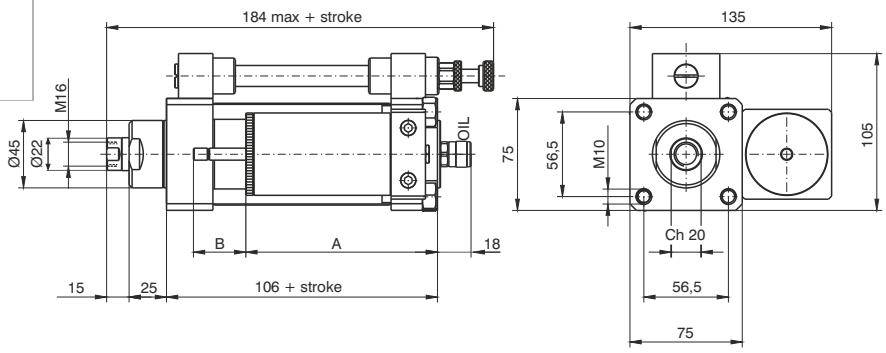

Strokes	A	B max
≥75 - <150	128	50
≥150 - <250	188	80
≥250 - <350	238	100
≥350 - <450	298	130
≥450 - ≤600	358	160

Min. stroke 75 mm
Weight gr. 2950 + gr. 850 every 50 mm. stroke

Regulation on the inward stroke

Ordering code
1400.63.stroke.02.2

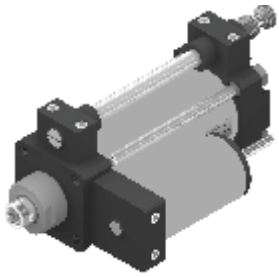

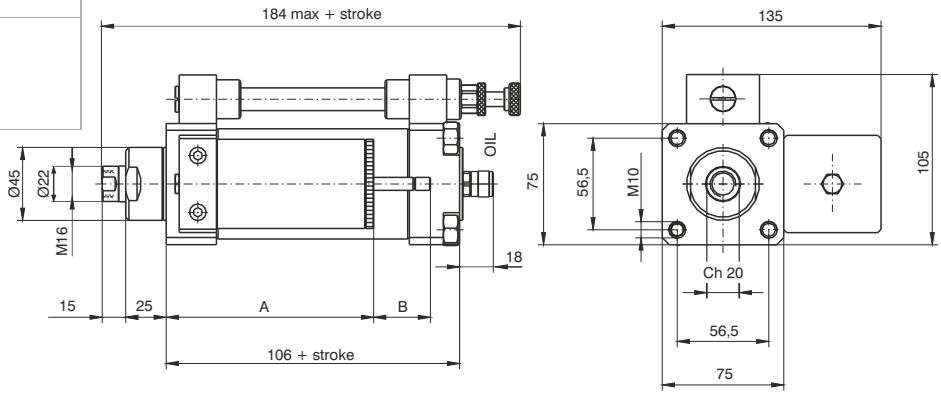

Strokes	A	B max
≥75 - <150	128	50
≥150 - <250	188	80
≥250 - <350	238	100
≥350 - <450	298	130
≥450 - ≤600	358	160

Min. stroke 75 mm
Weight gr. 2950 + gr. 850 every 50 mm. stroke

Regulation in both directions

Ordering code
1400.63.stroke.03.2

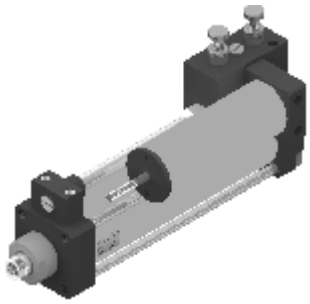

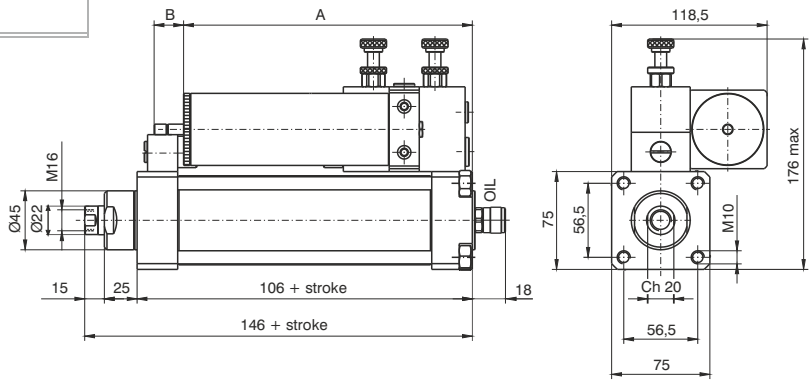

Strokes	A	B max
≥100 - <150	160	50
≥150 - <250	220	80
≥250 - <350	270	100
≥350 - <450	330	130
≥450 - ≤600	390	160

Min. stroke 100 mm
Weight gr. 3600 + gr. 850 every 50 mm. stroke

Regulation on the outward stroke with skip
(Acceleration valve)

Ordering code
1400.63.stroke.01.04

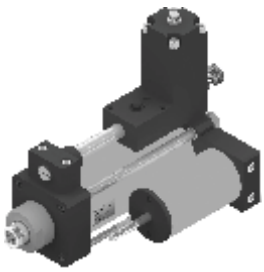

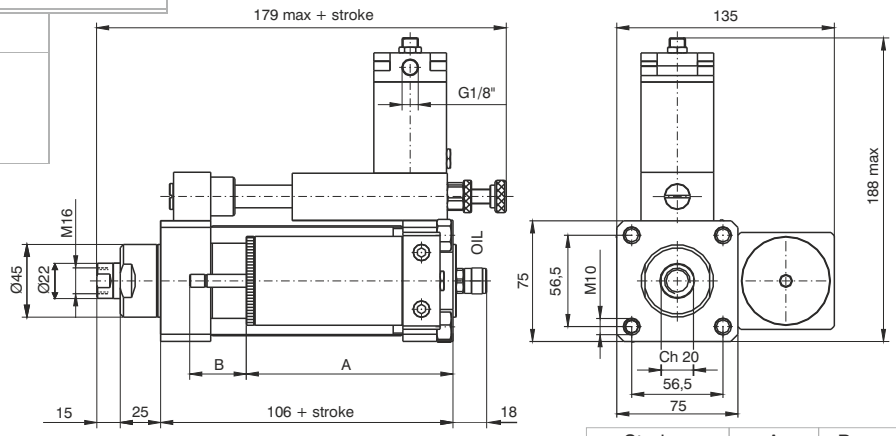

Strokes	A	B max
≥75 - <150	128	50
≥150 - <250	188	80
≥250 - <350	238	100
≥350 - <450	298	130
≥450 - ≤600	358	160

Min. stroke 75 mm
Weight gr. 3450 + gr. 850 every 50 mm. stroke

Regulation on the outward stroke with stop
(Stop valve)

Ordering code
1400.63.stroke.01.05

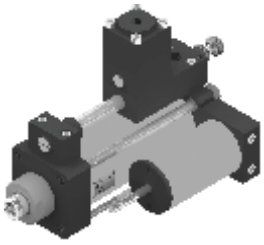

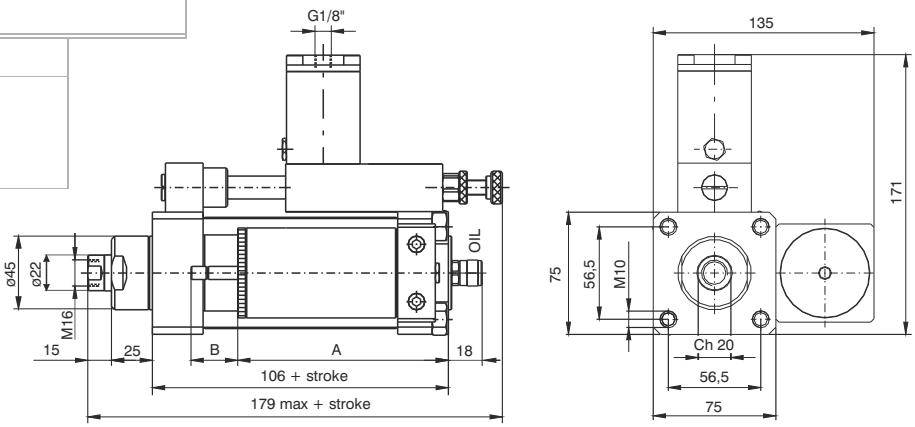

Strokes	A	B max
≥75 - <150	128	50
≥150 - <250	188	80
≥250 - <350	238	100
≥350 - <450	298	130
≥450 - ≤600	358	160

Min. stroke 75 mm
Weight gr. 3450 + gr. 850 every 50 mm. stroke

Regulation on the outward stroke with skip and stop
(Acceleration and stop valves)

Ordering code
1400.63.stroke.01.06

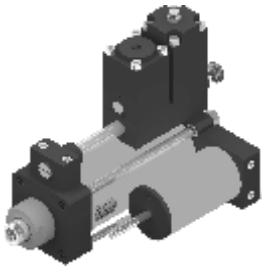

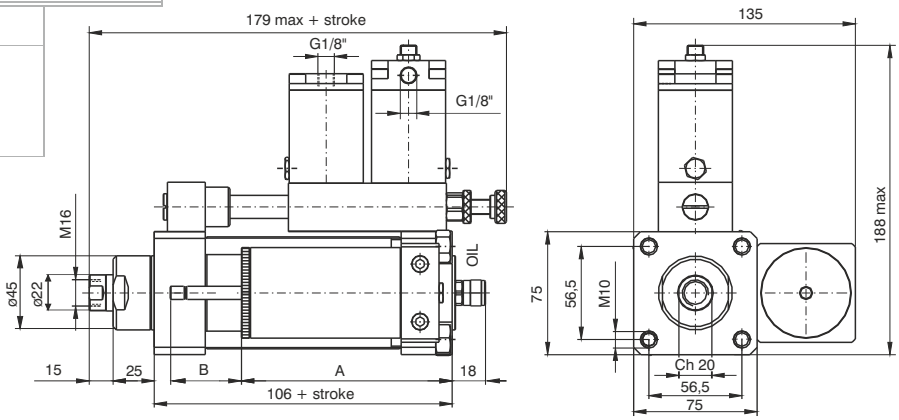

Strokes	A	B max
≥75 - <150	128	50
≥150 - <250	188	80
≥250 - <350	238	100
≥350 - <450	298	130
≥450 - ≤600	358	160

Min. stroke 75 mm
Weight gr. 3700 + gr. 850 every 50 mm. stroke

Regulation on the inward stroke with skip
(Acceleration valve)

Ordering code
1400.63.stroke.02.04

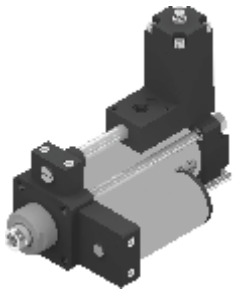

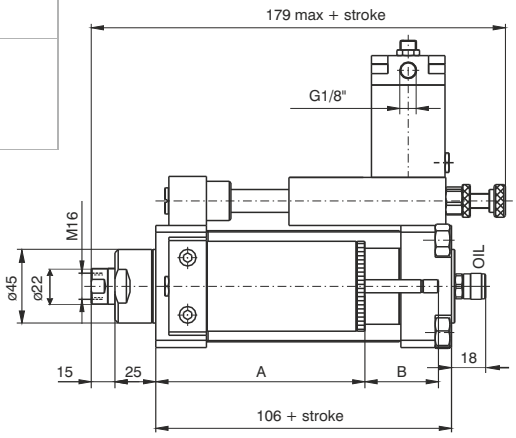

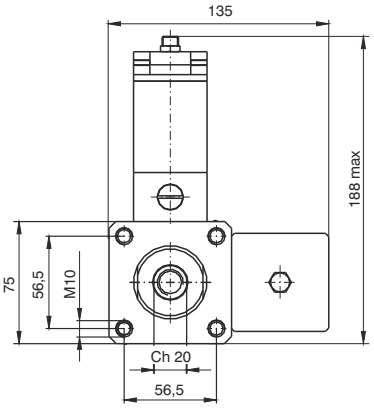

Strokes	A	B max
≥75 - <150	128	50
≥150 - <250	188	80
≥250 - <350	238	100
≥350 - <450	298	130
≥450 - ≤600	358	160

Min. stroke 75 mm
Weight gr. 3450 + gr. 850 every 50 mm. stroke

Regulation on the inward stroke with stop
(Stop valves)

Ordering code
1400.63.stroke.02.05

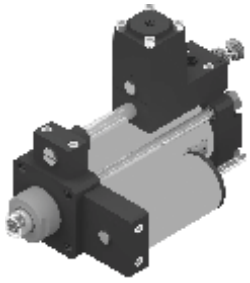

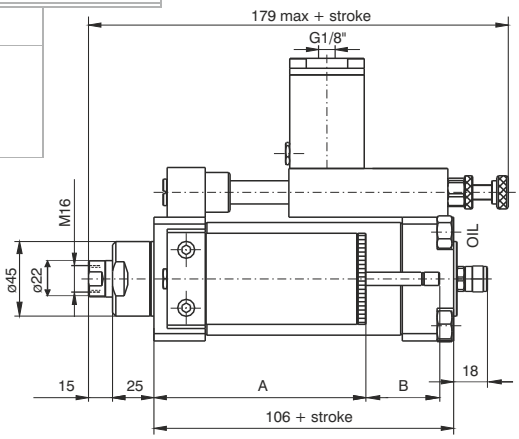

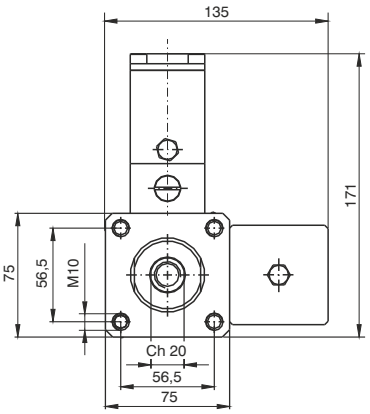

Strokes	A	B max
≥75 - <150	128	50
≥150 - <250	188	80
≥250 - <350	238	100
≥350 - <450	298	130
≥450 - ≤600	358	160

Min. stroke 75 mm
Weight gr. 3450 + gr. 850 every 50 mm. stroke

Regulation on the inward stroke with skip and stop
(Acceleration and stop valve)

Ordering code
1400.63.stroke.02.06

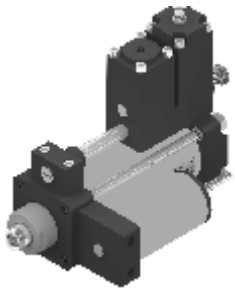

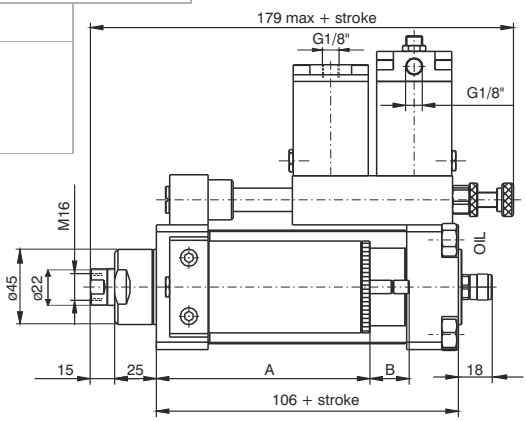

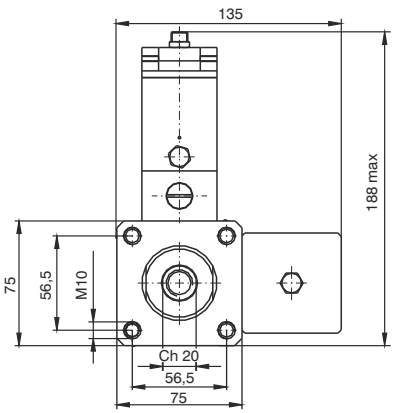

Strokes	A	B max
≥75 - <150	128	50
≥150 - <250	188	80
≥250 - <350	238	100
≥350 - <450	298	130
≥450 - ≤600	358	160

Min. stroke 75 mm
Weight gr. 3700 + gr. 850 every 50 mm. stroke

Regulation in both direction with skip
(Accelerations valve in two directions)

Ordering code

1400.63.stroke.03.04

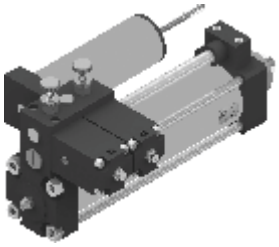

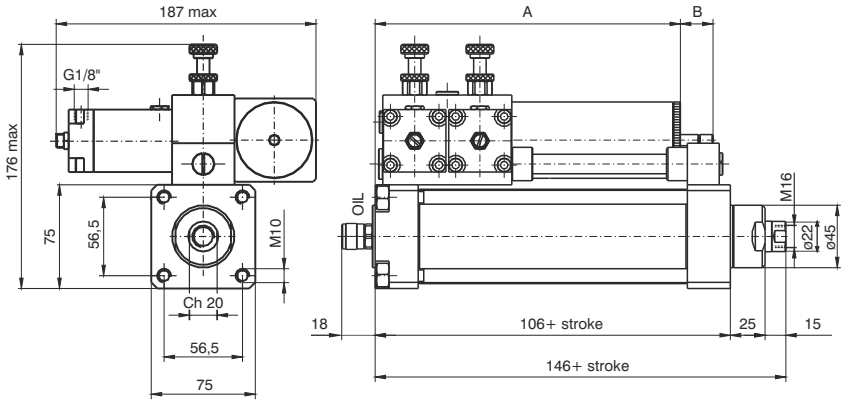

Strokes	A	B max
≥100 - <150	160	50
≥150 - <250	220	80
≥250 - <350	270	100
≥350 - <450	330	130
≥450 - ≤600	390	160

Min. stroke 100 mm
Weight gr. 4100 + gr. 850 every 50 mm. stroke

Regulation in both direction with stop
(Stop valves in two directions)

Ordering code

1400.63.stroke.03.05

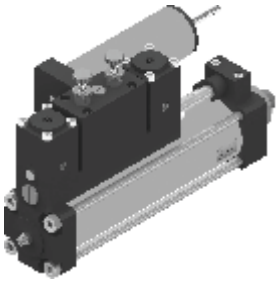

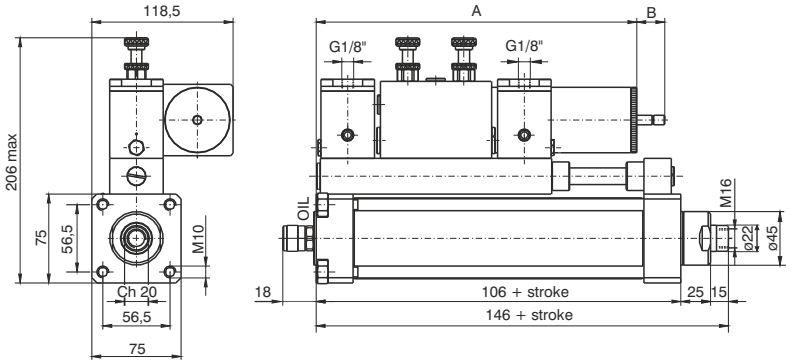

Strokes	A	B max
≥200 - <250	269	80
≥250 - <350	319	100
≥350 - <450	379	130
≥450 - ≤600	439	160

Min. stroke 200 mm
Weight gr. 4850 + gr. 850 every 50 mm. stroke

Regulation in both direction with skip and stop
(Acceleration and stop valves in two directions)

Ordering code

1400.63.stroke.03.06

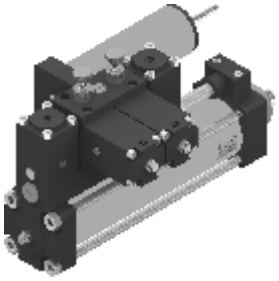

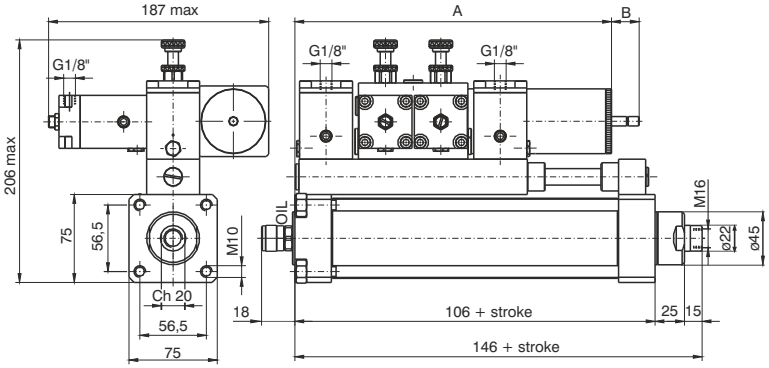

Strokes	A	B max
≥200 - <250	269	80
≥250 - <350	319	100
≥350 - <450	379	130
≥450 - ≤600	439	160

Min. stroke 200 mm
Weight gr. 5400 + gr. 850 every 50 mm. stroke

Dimensional releases and power supply positions with N.C. stop valves

Ordering code
1400.Ø.stroke.01.07 regulation on the outward stroke + stop N.C.
1400.Ø.stroke.01.08 regulation on the outward stroke + skip + stop N.C.
1400.Ø.stroke.02.07 regulation on the inward stroke + stop N.C.
1400.Ø.stroke.02.08 regulation on the inward stroke +skip and stop N.C.
1400.Ø.stroke.03.07 regulation in both directions + stop N.C.
1400.Ø.stroke.03.08 regulation in both directions + skip + stop N.C.

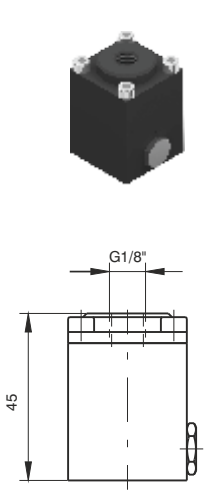

STOP N.O.
Ø40

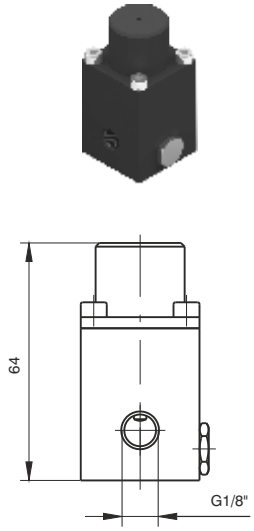

STOP N.C.
Ø40

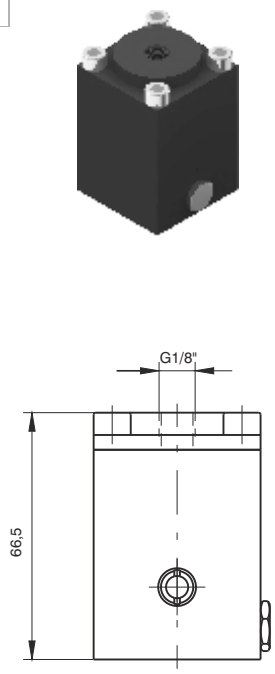

STOP N.O.
Ø63

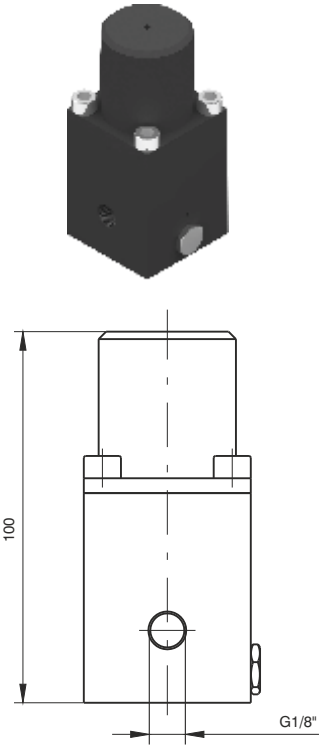

STOP N.C.
Ø63

Hydraulic fluid refill syringe

Ordering code
1400.99.02

Weight gr. 420

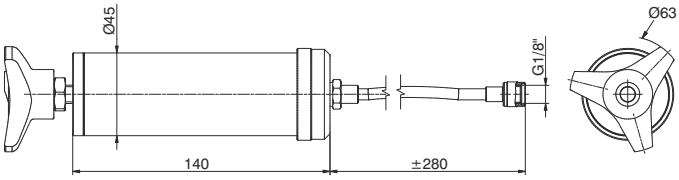

Oil for hydraulic and pneumatic circuits

Ordering code
PNEUMOIL 01 (1 litre bottles)

This oil is suitable to lubricate pneumatic circuits and also to refill hydraulic speed control tanks. It is completely compatible with our seals.

General

Pneumatic cylinder ISO 15552 handling and controlling movement by means of internal hydraulic circuit.
All ISO fixing devices can be used except for:

- Cylinder Ø63 front clevis code 1463.63.08F
- Cylinder Ø63 front flange code 1463.63.03F
- Cylinder Ø63 foot code 1463.63.05/1F

Ordering key

14_.stroke._._ . _

Ø50
Ø63

Regulation
A = Regulation on extraction
B = Regulation on compression
D = Double regulation

STOP function
0 = None
A = Stop N.C. extraction
B = Stop N.C. compression
C = Double Stop N.C.
D = Stop N.O. extraction
E = Stop N.O. compression
F = Double Stop N.O.

SKIP function
0 = None
A = Skip N.C. extraction
B = Skip N.C. compression
C = Double Skip N.C.
D = Skip N.O. extraction
E = Skip N.O. compression
F = Double Skip N.O.

Construction characteristics

End cap	aluminium black anodised
Piston Rod	steel tube externally chrome plated
Barrel	aluminium alloy anodised
Magnetic piston	aluminium
Cushion screw	nickel plated steel
Oil tank	aluminium
Pneumatic piston seal (pneumatic side)	oil resitant NBR rubber
Rod and cushion seal	PUR
Hydraulic piston seal (hydraulic side)	PUR

Technical characteristics

Pneumatic media	filtered and lubricated air
Hydraulic media	filtered 1μ hydraulic oil
Maximum pressure	8 bar
Skip & Stop valve minimum operating pressure	3 bar
Environment temperature	-5°C +70°C
Minimum regulated speed	40 mm/min.
Maximum regulated speed	6000 mm/min. *
Speed with SKIP	150 mm/sec. *
Free speed (without regulation)	300 mm/sec. *
Cushion speed	20 mm *
Standard stroke	from 50 to 450 steps 50 mm
Possibility of rear regulation (on request)	

*** Attenction:** speed recorded with cylinder on horizontal position fed at 8 bar without load on piston rod.

Force (N)

BORE	FORCE	PRESSURE (bar)									
		1	**2**	**3**	**4**	**5**	**6**	**7**	**8**	**9**	**10**
50	Extraction	181.4	362.9	544.3	725.7	907.2	1088.6	1270	1451.5	1632.9	1814.3
	Compression	144.4	288.8	433.2	577.6	722	866.3	1010.7	1155.1	1299.5	1443.9
63	Extraction	294.6	589.1	883.7	1178.2	1472.8	1767.3	2061.9	2356.5	2651	2945.6
	Compression	211.3	422.6	633.9	845.2	1056.6	1267.9	1479.2	1690.5	1901.8	2113.1

Base cylinder dimensions

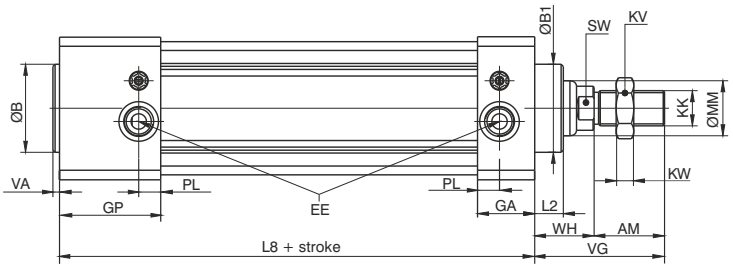

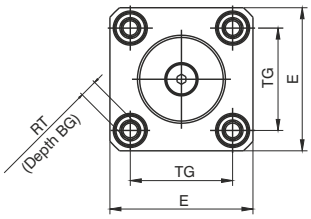

Bore	AM	B (d11)	B1 (d11)	BG	E	EE	GA	GP	KK	KV	KW	L2	L8	MM	PL	RT	SW	TG	VA	VG	WH
50	32	40	40	16	65	G1/4"	26	46	M16x1.5	24	8	13	116	25	10	M8	17	46.5	3	59	27
63		45	50		75	G3/8"			M16x1.5			20	121	35	12			56.5	4	69	37

Function valves and regulators position for the different versions

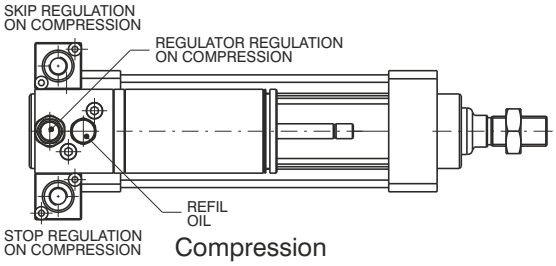

Compression

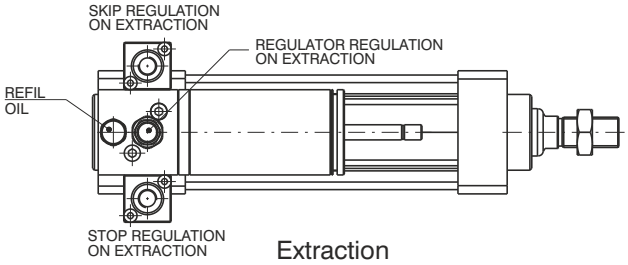

Extraction

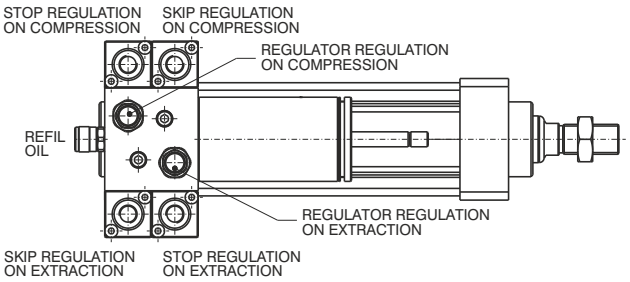

Double regulation

Rear regulator dimensions

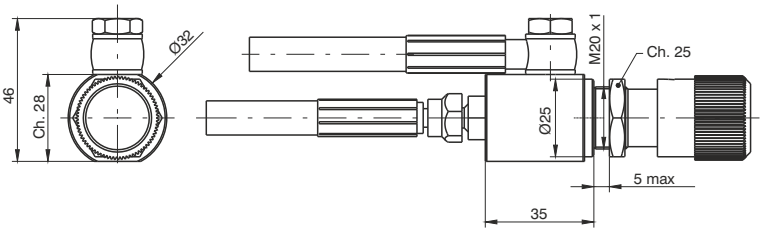

SKIP and STOP valves inlet feed position

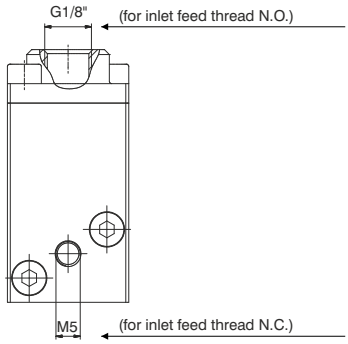

Sensor brackets codes 1500._, RS._, HS._

Dimensions

Bore	L
Ø50	77
Ø63	87

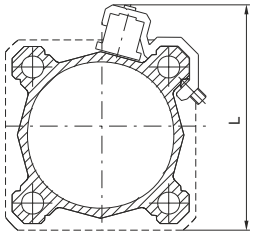

Ordering code	
1320.B	Brackets for cylinder sensors Ø50 - Ø63

Sensor brackets codes 1580._, MRS._, MHS._

Dimensions

Bore	L
Ø50	66
Ø63	76

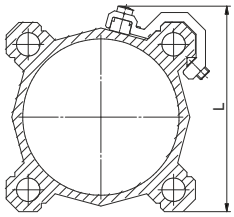

Ordering code	
1320.BS	Brackets for cylinder sensors Ø50 - Ø63

Sensor for cylinder

For technical characteristics and code see Chapter 6 “Magnetic sensor”

Regulation on the outward stroke

Ordering code
14Ø.stroke.A.0.0

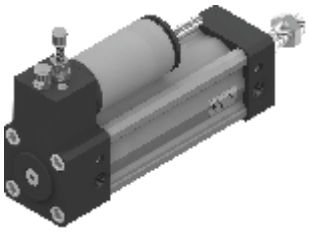

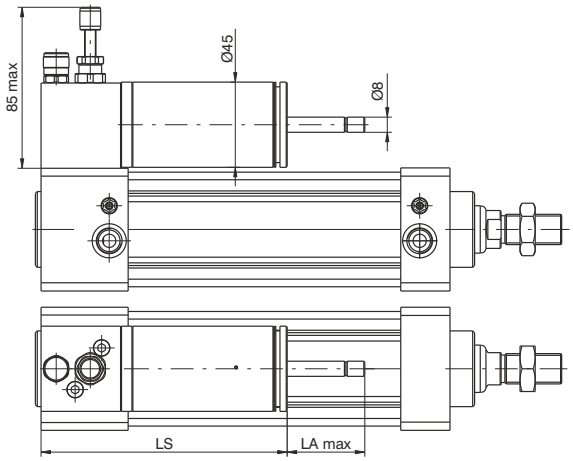

Ø50 Weight gr. 1970 + gr. 200 every 50 mm. stroke
Ø63 Weight gr. 2591 + gr. 280 every 50 mm. stroke

Strokes	LS	LA max
0 - 150	130	41
151 - 350	185	66
351 - 450	255	106

Regulation on the inward stroke

Ordering code
14Ø.stroke.B.0.0

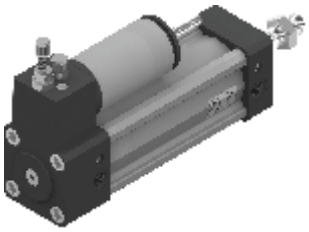

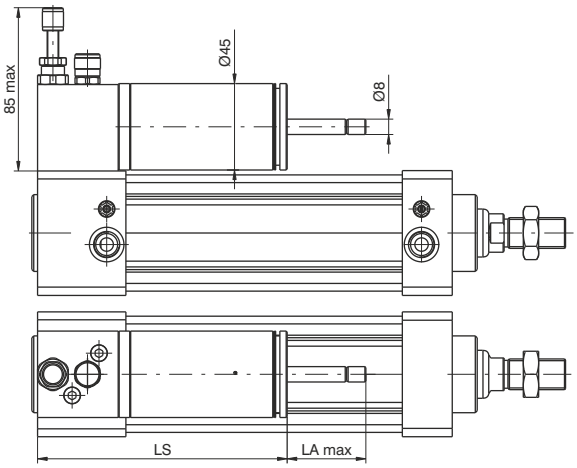

Ø50 Weight gr. 1970 + gr. 200 every 50 mm. stroke
Ø63 Weight gr. 2591 + gr. 280 every 50 mm. stroke

Strokes	LS	LA max
0 - 150	130	41
151 - 350	185	66
351 - 450	255	106

Regulation in both directions

Ordering code
14Ø.stroke.D.0.0

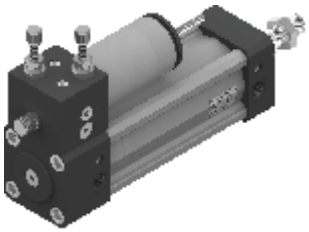

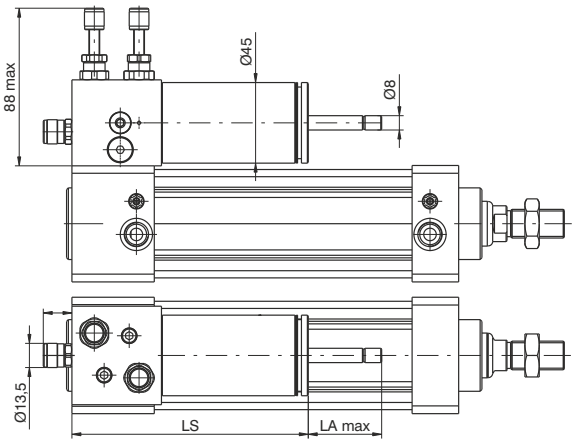

Ø50 Weight gr. 2128 + gr. 200 every 50 mm. stroke
Ø63 Weight gr. 2749 + gr. 280 every 50 mm. stroke

Strokes	LS	LA max
0 - 150	132	41
151 - 350	187	66
351 - 450	257	106

Regulation on the outward stroke with Skip N.O.

Ordering code
14Ø.stroke.A.0.D

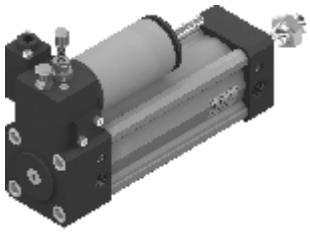

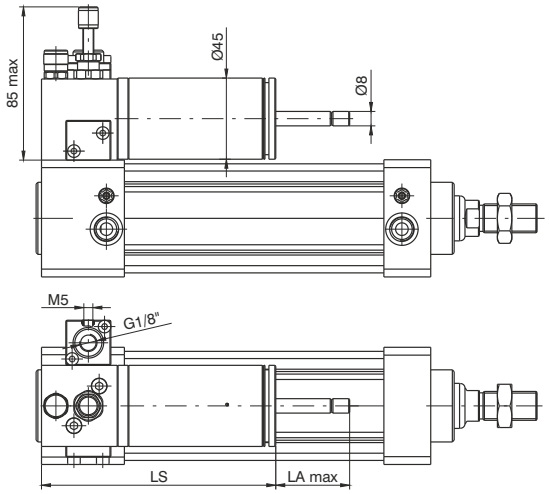

Strokes	LS	LA max
0 - 150	130	41
151 - 350	185	66
351 - 450	255	106

Ø50 Weight gr. 2059 + gr. 200 every 50 mm. stroke
Ø63 Weight gr. 2928 + gr. 280 every 50 mm. stroke

Regulation on the inward stroke with Skip N.O.

Ordering code
14Ø.stroke.B.0.E

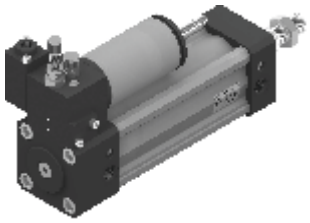

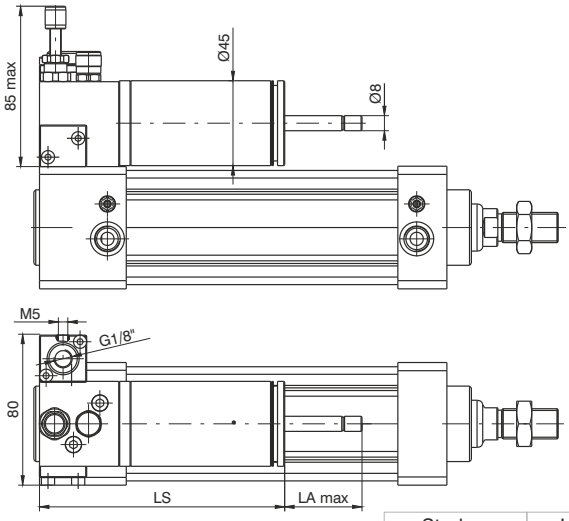

Strokes	LS	LA max
0 - 150	130	41
151 - 350	185	66
351 - 450	255	106

Ø50 Weight gr. 2059 + gr. 200 every 50 mm. stroke
Ø63 Weight gr. 2928 + gr. 280 every 50 mm. stroke

Regulation on the outward stroke with Stop N.O.

Ordering code
14Ø.stroke.A.D.0

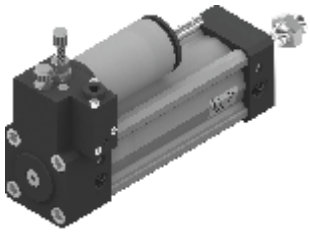

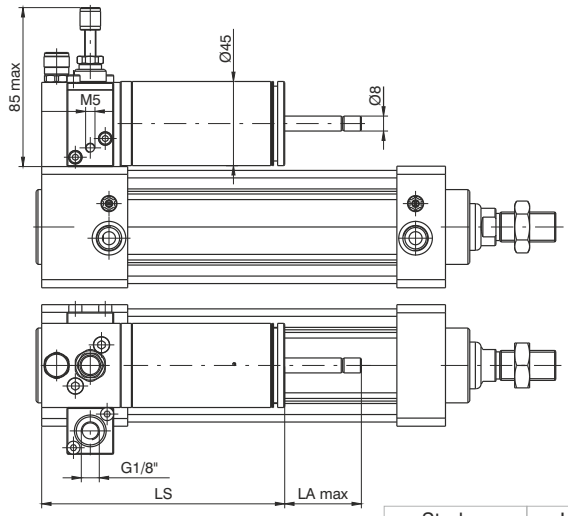

Strokes	LS	LA max
0 - 150	130	41
151 - 350	185	66
351 - 450	255	106

Ø50 Weight gr. 2059 + gr. 200 every 50 mm. stroke
Ø63 Weight gr. 2928 + gr. 280 every 50 mm. stroke

Regulation on the inward stroke with Stop N.O.

Ordering code
14Ø.stroke.B.E.0

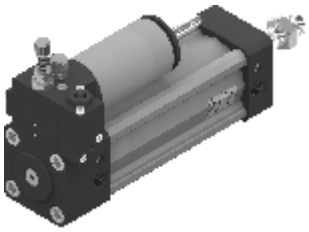

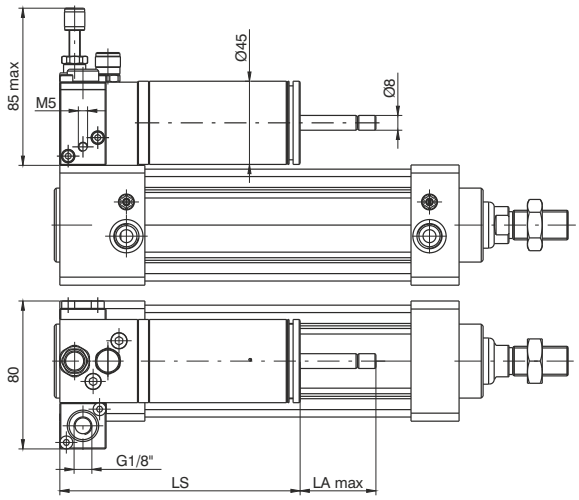

Strokes	LS	LA max
0 - 150	130	41
151 - 350	185	66
351 - 450	255	106

Ø50 Weight gr. 2059 + gr. 200 every 50 mm. stroke
Ø63 Weight gr. 2928 + gr. 280 every 50 mm. stroke

Regulation on the outward stroke with Skip N.O. - Stop N.O.

Ordering code
14Ø.stroke.A.D.D

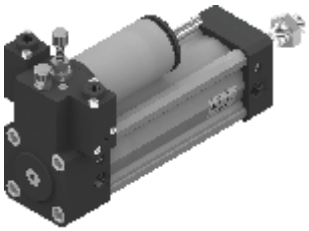

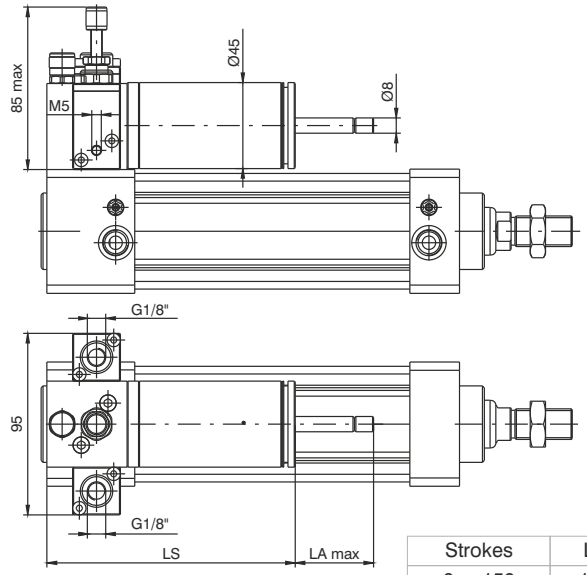

Strokes	LS	LA max
0 - 150	130	41
151 - 350	185	66
351 - 450	255	106

Ø50 Weight gr. 2140 + gr. 200 every 50 mm. stroke
Ø63 Weight gr. 2761 + gr. 280 every 50 mm. stroke

Regulation on the inward stroke with Skip N.O. - Stop N.O.

Ordering code
14Ø.stroke.B.E.E

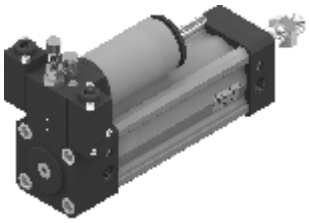

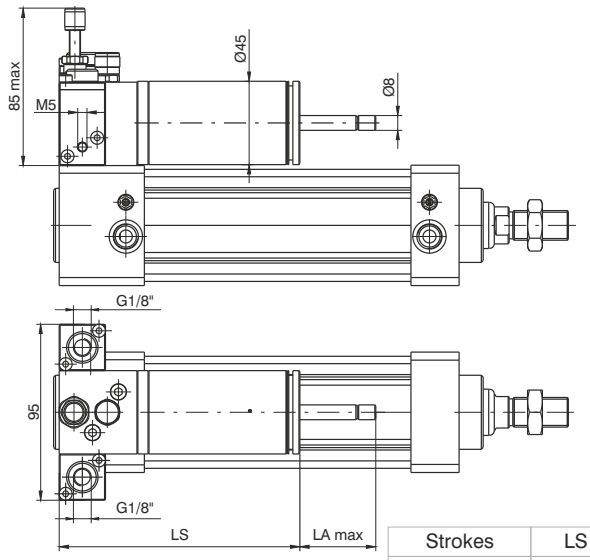

Strokes	LS	LA max
0 - 150	130	41
151 - 350	185	66
351 - 450	255	106

Ø50 Weight gr. 2140 + gr. 200 every 50 mm. stroke
Ø63 Weight gr. 2761 + gr. 280 every 50 mm. stroke

Regulation and Skip in both directions
(N.O. Skip valves in both directions)

Ordering code
14Ø.stroke.D.0.F

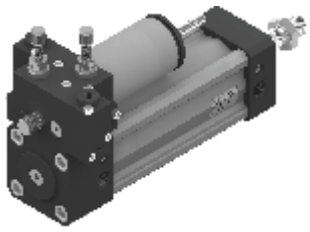

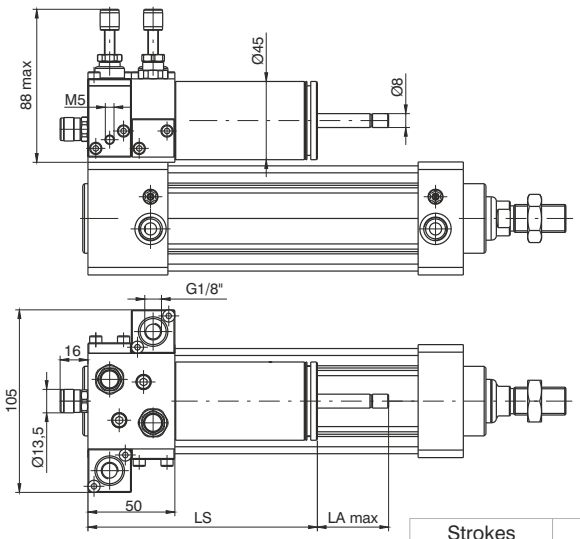

Strokes	LS	LA max
0 - 150	132	41
151 - 350	187	66
351 - 450	257	106

Ø50 Weight gr. 2311 + gr. 200 every 50 mm. stroke
Ø63 Weight gr. 2932 + gr. 280 every 50 mm. stroke

Regulation and Stop in both directions
(N.O. Stop valves in both directions)

Ordering code
14Ø.stroke.D.F.0

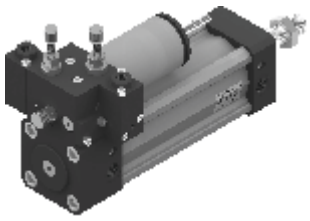

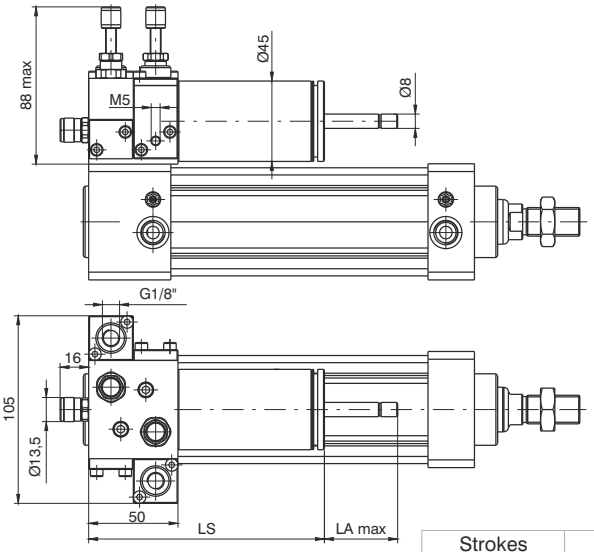

Strokes	LS	LA max
0 - 150	132	41
151 - 350	187	66
351 - 450	257	106

Ø50 Weight gr. 2311 + gr. 200 every 50 mm. stroke
Ø63 Weight gr. 2932 + gr. 280 every 50 mm. stroke

Regulation with Skip and Stop in both directions
(N.O. Skip and Stop valves in both directions)

Ordering code
14Ø.stroke.D.F.F

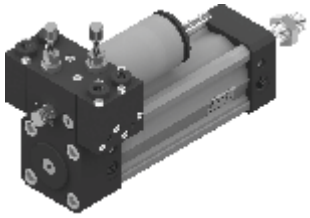

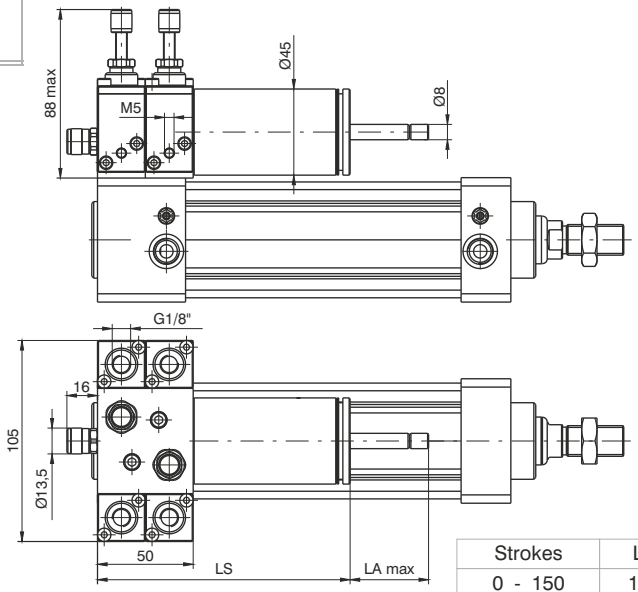

Strokes	LS	LA max
0 - 150	132	41
151 - 350	187	66
351 - 450	257	106

Ø50 Weight gr. 2473 + gr. 200 every 50 mm. stroke
Ø63 Weight gr. 3094 + gr. 280 every 50 mm. stroke

General

Profiled tube has three "T" slots on the three sides hosting sensors 1500._, RS._, HS._. without adaptors and with adaptor code 1380.01F codes 1580._, MRS._, MHS._.

A complete range of clamps makes them easy to install under any conditions.

It is interesting to note that as these cylinders (from Ø 32 to Ø 100) have anchoring holes with the same lead and thread as those of series 1320 ISO 6431, they accept all mountings except for the intermediate trunnion.

Construction characteristics

Body	anodised aluminium
Rod	C43 chromed steel (stainless steel for magnetic cylinder Ø20 and Ø25)
Piston	aluminium
Rod bushing	anodised aluminium
End plate	anodised aluminium
Seals	Standard: NBR Oil resistant rubber, PUR Piston rod seals (HNBR or FPM seals available upon request)

Technical characteristics

Fluid	filtered and preferably lubricated air
Max. pressure	10 bar
Working temperature	-5°C - +70°C with standard seals magnetic or non magnetic piston -5°C - +80°C with FPM seals magnetic piston -5°C - +80°C with HNBR seals magnetic piston -5°C - +120°C with HNBR seals non magnetic piston -5°C - +150°C with FPM seals non magnetic piston

Please follow the suggestions below to ensure a long life for these cylinders:
- use clean and lubricated air
- correct alignment during assembly with regard to the applied load so as to avoid radial components or bending the rod.
- avoid high speeds together with long strokes and heavy loads: this would produce kinetic energy which the cylinder cannot absorb, especially if used as a limit stop (in this case use mechanical stop device)
- evaluate the environmental characteristics of cylinder used (high temperature, hard atmosphere, dust, humidity etc.)

Please note: air must be dried for applications with lower temperature.
Use hydraulic oils H class (ISO VG32) for correct continued lubrication.
Our Technical Department will be glad to help.

Standard strokes

Type 1501, 1504, 1511, 1514, 1515, 1516, 1517 and 1518:
for all bores from 5 to 50 mm every 5 mm.

Type 1502, 1503, 1512 and 1513:
for all bores from 5 to 10 mm.

Type with non-rotating device:

Ø 20 and Ø 25	from 5 to 40 mm every 5 mm.
Ø 32 and Ø 40	from 5 to 50 mm every 5 mm.
Ø 50 and Ø 63	from 5 to 60 mm every 5 mm.
Ø 80 and Ø 100	from 5 to 80 mm every 5 mm.

Double acting version

Ordering code
1501.Ø.stroke standard seals **1501.Ø.stroke.V** FPM seals **1501.Ø.stroke.T** HNBR seals

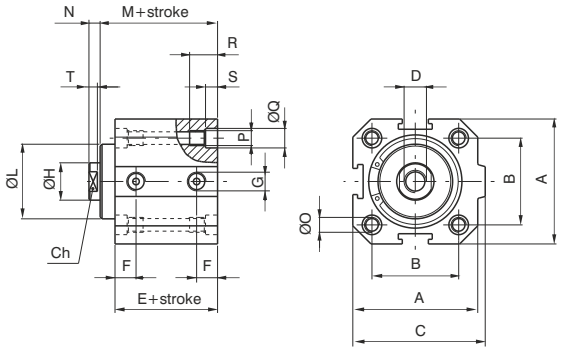

Double acting version with magnetic piston

Ordering code
1511.Ø.stroke standard seals **1511.Ø.stroke.V** FPM seals **1511.Ø.stroke.T** HNBR seals

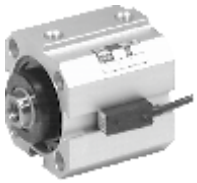

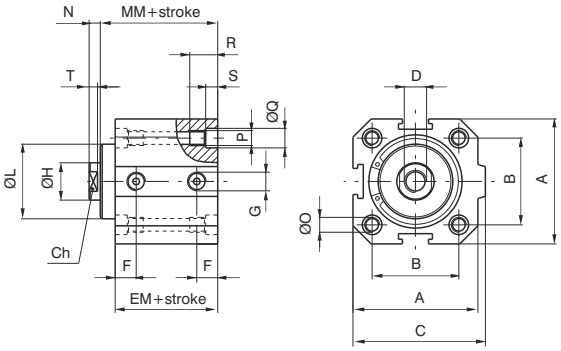

Bore	20	25	32	40	50	63	80	100
A	35	41	48	57	67	80	100	120
B	26	28	32,5	38	46,5	56,5	72	89
C	39,5	44,5	52	61	71	84	106	126
D	M4x8	M5x10	M6x12	M10x15	M12x18	M12x18	M16x20	M16x20
E	29	30,5	32	33,5	35	38	44	47
EM	34	35,5	37	38,5	40	43	49	52
F	9	9,15	9,75	10,5	11	11,25	13,75	15,25
G	G 1/8"	G 1/8"	G 1/8"	G 1/8"	G 1/8"	G 1/8"	G 3/8"	G 3/8"
Ø H	8	10	12	16	20	20	25	25
Ø L $^{\pm 0,05}$ $\left(^{0}_{-0,1 \text{ for Ø80 and Ø 100}}\right)$	17	20,5	26	31	39	40	55	55
M	32	33	35,5	39,5	43	46	51,5	54,5
MM	37	38	40,5	44,5	48	51	56,5	59,5
N	4	4	4	5	6	6	8	8
Ø O	4,3	5,3	5,3	5,3	7	7	9	9
P	M5	M6	M6	M6	M8	M8	M10	M10
Ø Q	7,5	8,5	8,5	8,5	10,5	10,5	13,5	13,5
R	15	18	18	18	22	22	30	30
S	4,5	5,5	5,5	5,5	6,5	6,5	8,5	8,5
T	3	3	3	4	4,5	4,5	5,5	5,5
Ch	6	8	10	13	17	17	22	22

Non magnetic

Weight	stroke 0	75	110	170	260	400	600	800	1500
gr.	every 10 mm	20	30	40	60	80	100	120	145

Magnetic

Weight	stroke 0	90	130	200	310	460	700	910	1620
gr.	every 10 mm	20	30	40	60	80	100	120	145

Single acting version with front spring

Ordering code

1502.Ø.stroke standard seals
1502.Ø.stroke.V FPM seals
1502.Ø.stroke.T HNBR seals

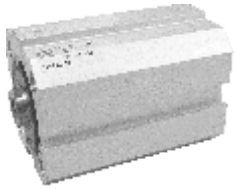

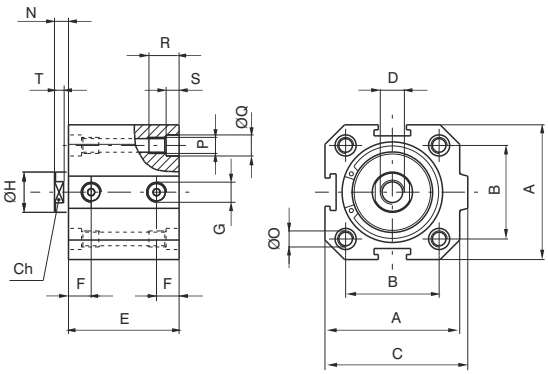

Single acting version front spring with magnetic piston

Ordering code

1512.Ø.stroke standard seals
1512.Ø.stroke.V FPM seals
1512.Ø.stroke.T HNBR seals

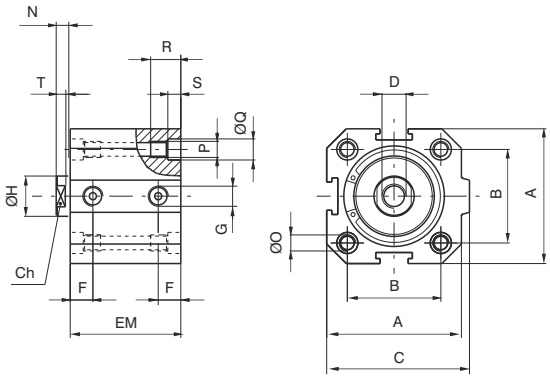

4

Bore		20	25	32	40	50	63	80	100
A		35	41	48	57	67	80	100	120
B		26	28	32,5	38	46,5	56,5	72	89
C		39,5	44,5	52	61	71	84	106	126
D		M4X8	M5X10	M6X12	M10X15	M12X18	M12X18	M16X20	M16X20
E	stroke 5	29	30,5	32	33,5	35	38	44	47
	stroke 10	34	35,5	37	38,5	40	43	49	52
EM	stroke 5	34	35,5	37	38,5	40	43	49	52
	stroke 10	39	40,5	42	43,5	45	48	54	57
F		9	9,15	9,75	10,5	11	11,25	13,75	15,25
G		G 1/8"	G 1/8"	G 1/8"	G 1/8"	G 1/8"	G 1/8"	G 3/8"	G 3/8"
Ø H		8	10	12	16	20	20	25	25
N		4	4	4	5	6	6	8	8
Ø O		4,3	5,3	5,3	5,3	7	7	9	9
P		M5	M6	M6	M6	M8	M8	M10	M10
Ø Q		7,5	8,5	8,5	8,5	10,5	10,5	13,5	13,5
R		15	18	18	18	22	22	30	30
S		4,5	5,5	5,5	5,5	6,5	6,5	8,5	8,5
T		3	3	3	4	4,5	4,5	5,5	5,5
Ch		6	8	10	13	17	17	22	22

Non magnetic

Weight gr.	stroke 5	70	105	160	250	370	550	750	1440
	stroke 10	80	120	180	280	410	600	810	1500

Magnetic

Weight gr.	stroke 5	85	125	190	300	430	650	860	1560
	stroke 10	95	140	210	330	470	700	920	1620

Single acting version with rear spring

Ordering code
1503.Ø.stroke standard seals **1503.Ø.stroke.V** FPM seals **1503.Ø.stroke.T** HNBR seals

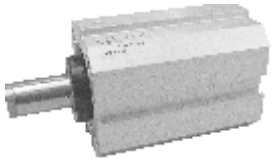

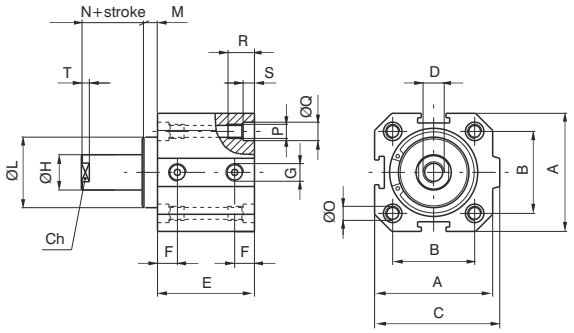

Single acting version rear spring with magnetic piston

Ordering code
1513.Ø.stroke standard seals **1513.Ø.stroke.V** FPM seals **1513.Ø.stroke.T** HNBR seals

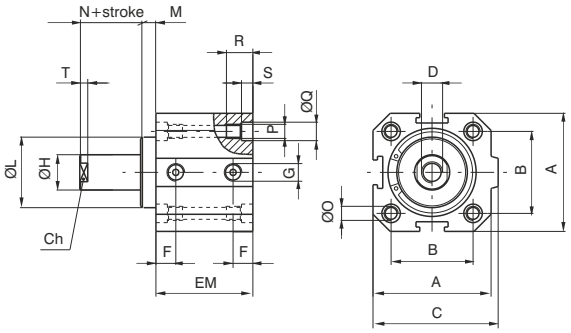

Bore		20	25	32	40	50	63	80	100
A		35	41	48	57	67	80	100	120
B		26	28	32,5	38	46,5	56,5	72	89
C		39,5	44,5	52	61	71	84	106	126
D		M4X8	M5X10	M6X12	M10X15	M12X18	M12X18	M16X20	M16X20
E	stroke 5	29	30,5	32	33,5	35	38	44	47
	stroke 10	34	35,5	37	38,5	40	43	49	52
EM	stroke 5	34	35,5	37	38,5	40	43	49	52
	stroke 10	39	40,5	42	43,5	45	48	54	57
F		9	9,15	9,75	10,5	11	11,25	13,75	15,25
G		G 1/8"	G 1/8"	G 1/8"	G 1/8"	G 1/8"	G 1/8"	G 3/8"	G 3/8"
Ø H		8	10	12	16	20	20	25	25
Ø L $^{\pm 0,05}$ ($^{0}_{-0,1}$ for Ø80 and Ø100)		17	20,5	26	31	39	40	55	55
M		3	2,5	3,5	6	8	8	7,5	7,5
N		4	4	4	5	6	6	8	8
Ø O		4,3	5,3	5,3	5,3	7	7	9	9
P		M5	M6	M6	M6	M8	M8	M10	M10
Ø Q		7,5	8,5	8,5	8,5	10,5	10,5	13,5	13,5
R		15	18	18	18	22	22	30	30
S		4,5	5,5	5,5	5,5	6,5	6,5	8,5	8,5
T		3	3	3	4	4,5	4,5	5,5	5,5
Ch		6	8	10	13	17	17	22	22

Non magnetic

Weight	stroke 5	70	105	160	250	370	550	750	1440
gr.	stroke 10	80	120	180	280	410	600	810	1500

Magnetic

Weight	stroke 5	85	125	190	300	430	650	860	1560
gr.	stroke 10	95	140	210	330	470	700	920	1620

Double acting push-pull rod version

Ordering code

1504.Ø.stroke standard seals
1504.Ø.stroke.V FPM seals
1504.Ø.stroke.T HNBR seals

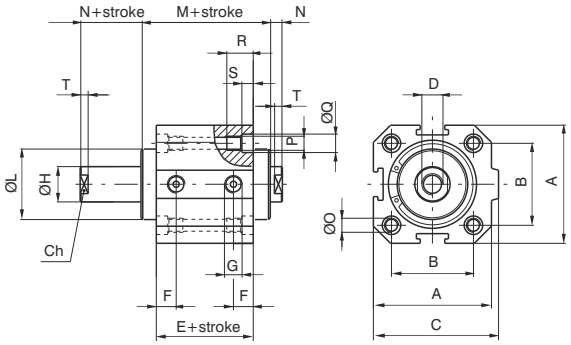

Double acting push-pull rod version with magnetic piston

Ordering code

1514.Ø.stroke standard seals
1514.Ø.stroke.V FPM seals
1514.Ø.stroke.T HNBR seals

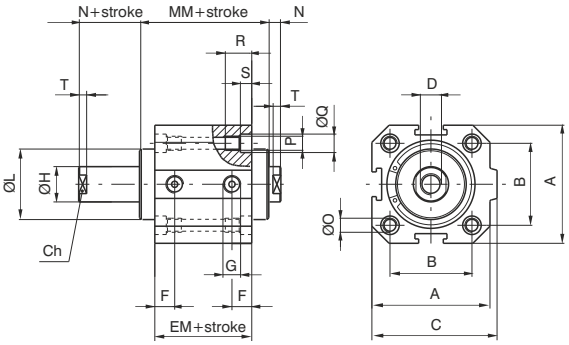

4

Bore	20	25	32	40	50	63	80	100
A	35	41	48	57	67	80	100	120
B	26	28	32,5	38	46,5	56,5	72	89
C	39,5	44,5	52	61	71	84	106	126
D	M4X8	M5X10	M6X12	M10X15	M12X18	M12X18	M16X20	M16X20
E	29	30,5	32	33,5	35	38	44	47
EM	34	35,5	37	38,5	40	43	49	52
F	9	9,15	9,75	10,5	11	11,25	13,75	15,25
G	G 1/8"	G 1/8"	G 1/8"	G 1/8"	G 1/8"	G 1/8"	G 3/8"	G 3/8"
Ø H	8	10	12	16	20	20	25	25
Ø L $\pm 0{,}05$ ($^{0}_{-0{,}1}$ for Ø80 and Ø 100)	17	20,5	26	31	39	40	55	55
M	35	35,5	39	45,5	51	54	59	62
MM	40	40,5	44	50,5	56	59	64	67
N	4	4	4	5	6	6	8	8
Ø O	4,3	5,3	5,3	5,3	7	7	9	9
P	M5	M6	M6	M6	M8	M8	M10	M10
Ø Q	7,5	8,5	8,5	8,5	10,5	10,5	13,5	13,5
R	15	18	18	18	22	22	30	30
S	4,5	5,5	5,5	5,5	6,5	6,5	8,5	8,5
T	3	3	3	4	4,5	4,5	5,5	5,5
Ch	6	8	10	13	17	17	22	22

Non magnetic

Weight	stroke 0	90	130	200	320	460	670	1100	1680
gr.	every 10 mm	20	35	50	70	90	110	155	185

Magnetic

Weight	stroke 0	105	160	240	380	530	740	1210	1820
gr.	every 10 mm	20	35	50	70	90	110	155	185

Tandem with opposed rods

Ordering code

1515.Ø.stroke.stroke 1 standard seals
1515.Ø.stroke.stroke 1.V FPM seals
1515.Ø.stroke.stroke 1.T HNBR seals
1515.Ø.stroke.stroke 1.M standard seals, magnetic piston
1515.Ø.stroke.stroke 1.MV FPM seals, magnetic piston
1515.Ø.stroke.stroke 1.MT HNBR seals, magnetic piston

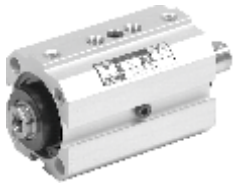

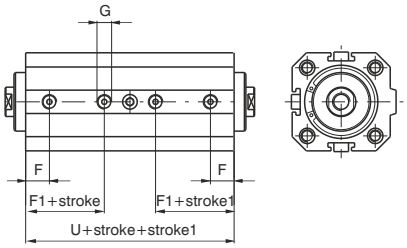

Tandem push with common rods

Ordering code

1516.Ø.stroke standard seals
1516.Ø.stroke.V FPM seals
1516.Ø.stroke.T HNBR seals
1516.Ø.stroke.M standard seals, magnetic piston
1516.Ø.stroke.MV FPM seals, magnetic piston
1516.Ø.stroke.MT HNBR seals, magnetic piston

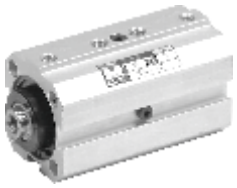

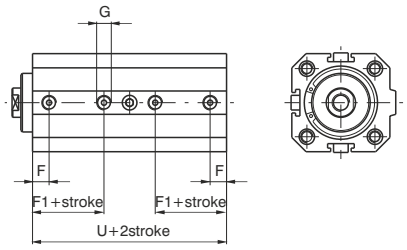

Tandem push with independent rods

Ordering code

1517.Ø.stroke.stroke 1 standard seals
1517.Ø.stroke.stroke 1.V FPM seals
1517.Ø.stroke.stroke 1.T HNBR seals
1517.Ø.stroke.stroke 1.M standard seals, magnetic piston
1517.Ø.stroke.stroke 1.MV FPM seals, magnetic piston
1517.Ø.stroke.stroke 1.MT HNBR seals, magnetic piston

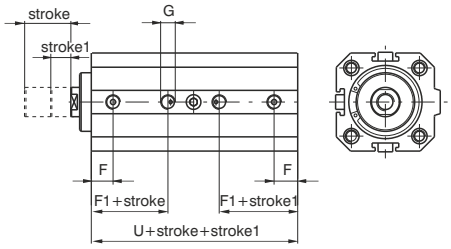

Opposed tandem with common rods

Ordering code

1518.Ø.stroke.stroke 1 standard seals
1518.Ø.stroke.stroke 1.V FPM seals
1518.Ø.stroke.stroke 1.T HNBR seals
1518.Ø.stroke.stroke 1.M standard seals, magnetic piston
1518.Ø.stroke.stroke 1.MV FPM seals, magnetic piston
1518.Ø.stroke.stroke 1.MT HNBR seals, magnetic piston

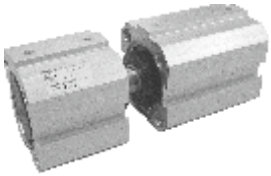

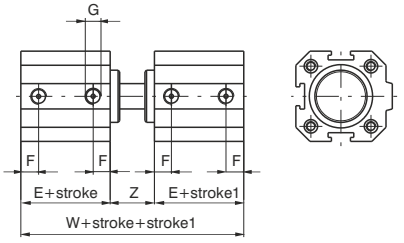

Bore	20	25	32	40	50	63	80	100
E	29	30,5	32	33,5	35	38	44	47
F	9	9,15	9,75	10,5	11	11,25	13,75	15,25
F1	17,5	18,35	19,75	20,5	21,5	24,25	24,75	26,25
G	G 1/8"	G 1/8"	G 1/8"	G 1/8"	G 1/8"	G 1/8"	G 3/8"	G 3/8"
U	59	60,5	67	68,5	70	78	89	97
W	72	74	79	89	98	104	119	125
Z	14	13	15	22	28	28	31	31

Variations with magnetic piston

E	34	35,5	37	38,5	40	43	49	52
F1	22,5	23,35	24,75	25,5	26,5	29,25	29,75	31,25
U	69	70,5	77	78,5	80	88	99	107
W	82	84	89	99	108	114	129	135

Double acting version

Ordering code
1501.Ø.stroke.AR standard seals **1501.Ø.stroke.AR.V** FPM seals **1501.Ø.stroke.AR.T** HNBR seals

Double version with magnetic piston

Ordering code
1511.Ø.stroke.AR standard seals **1511.Ø.stroke.AR.V** FPM seals **1511.Ø.stroke.AR.T** HNBR seals

Cylinders with non-rotating device

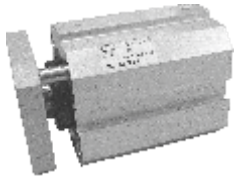

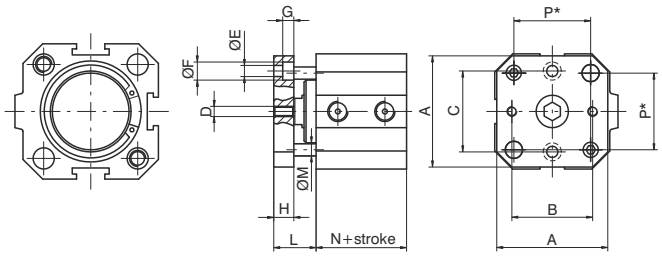

* = Distance between rods centres

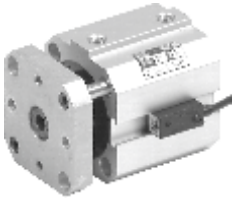

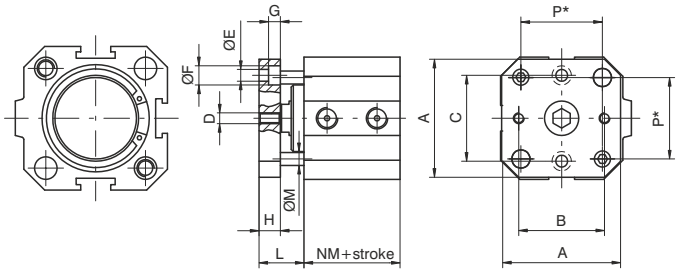

* = Distance between rods centres

It is possible, upon request to have four holes threaded and with counter bores in order to rear mount the cylinder as if it was standard.

Bore		20	25	32	40	50	63	80	100
A		35	40	45	55	65	80	100	120
B		22	26	32	40	50	62	82	103
C		22	28	34	40	50	62	82	103
D		M4	M5	M5	M5	M6	M6	M8	M8
Ø E		4,5	5,5	5,5	5,5	6,5	8,5	8,5	8,5
Ø F		7,5	9	9	9	10,5	13,5	13,5	13,5
G		4,5	5,5	5,5	5,5	6,5	8,5	8,5	8,5
H		8	8	10	10	12	12	15	15
L		15	14,5	17,5	21	26	26	30,5	30,5
Ø M		6	6	6	6	8	8	10	10
N		29	30,5	32	33,5	35	38	44	47
NM		34	35,5	37	38,5	40	43	49	52
P		26	28	32,5	38	46,5	56,5	72	89
Max. suggestion stroke		40	40	50	50	60	60	80	80
Weight gr.	stroke 0	40	50	70	90	200	250	490	650
	every 10 mm	5	5	5	5	10	10	20	20

Rear clevis

Ordering code
1500.Ø.09F

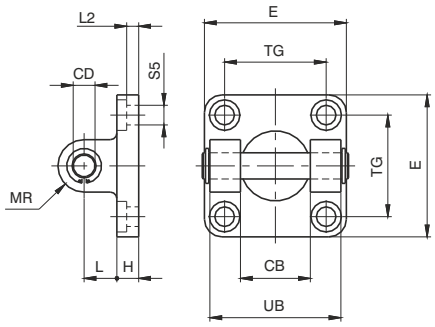

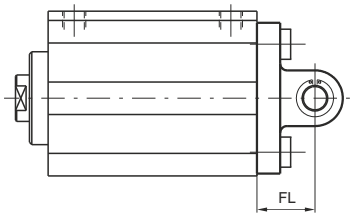

This allows anchorage of the cylinder both parallel and at a right angle to the plane; the cylinder rod can oscillate and self-align as necessary. It is made of aluminium alloy and painted black.

Bore	20	25	32	40	50	63	80	100
CB (h 9)	16	20	26	28	32	40	50	60
CD (H 9)	8	10	10	12	12	16	16	20
E	35	40	45	52	65	75	95	115
H	6	8	9	9	11	11	14	14
L	12	12	13	16	16	21	22	27
MR	8	9	10	12	12	16	16	20
TG	26	28	32,5	38	46,5	56,5	72	89
UB	35	40	45	52	60	70	90	110
FL	18	20	22	25	27	32	36	41
L2	/	/	5,5	5,5	6,5	6,5	10	10
S5 (H13)	5,5	6,6	6,6	6,6	9	9	11	11
Weight gr.	45	75	80	130	185	310	530	910

Rear clevis male

Ordering code
1500.Ø.09/1F

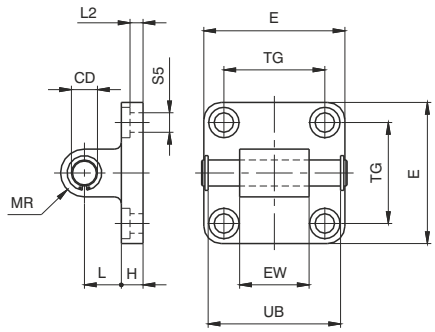

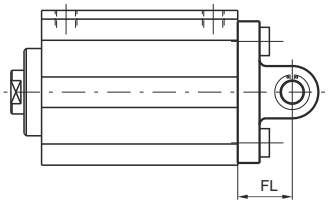

This allows anchorage of the cylinder both parallel and at a right angle to the plane; the cylinder rod can oscillate and self-align as necessary. It is made of aluminium alloy and painted black.

Bore	20	25	32	40	50	63	80	100
CD (h 9)	8	10	10	12	12	16	16	20
E	35	40	45	52	65	75	95	115
EW	16	20	26	28	32	40	50	60
H	6	8	9	9	11	11	14	14
L	12	12	13	16	16	21	22	27
MR	8	9	10	12	12	16	16	20
TG	26	28	32,5	38	46,5	56,5	72	89
UB	35	40	46	53	61	71	91	111
FL	18	20	22	25	27	32	36	41
L2	/	/	5,5	5,5	6,5	6,5	10	10
S5 (H 13)	5,5	6,6	6,6	6,6	9	9	11	11
Weight gr.	53	85	90	130	190	340	580	960

Slot fixing screws

Ordering code
1500.15F (from Ø20 to Ø32) **1500.16F** (from Ø40 to Ø63) **1500.18F** (Ø80 and Ø100)

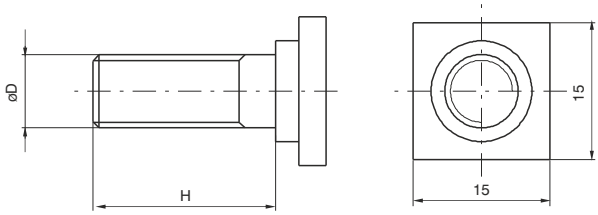

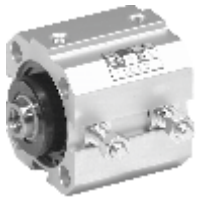

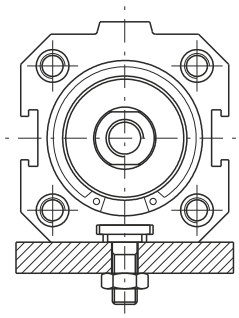

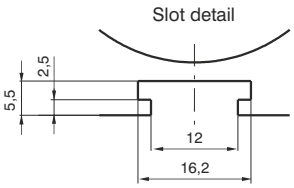

Example mounted with square headed screws on the plane.

Bore	20	25	32	40	50	63	80	100
ØD	M6	M6	M6	M8	M8	M8	M10	M10
H	15	15	15	20	20	20	25	25
Weight gr.	10			18			25	

Nipple with ISO standard thread

Ordering code
1500.Ø.17F

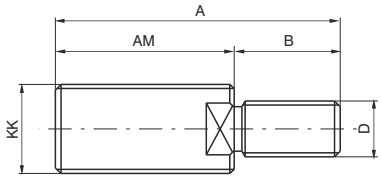

Fitted on the female thread of the compact cylinders, restore the ISO configurations rod (ISO 6432 for cylinders Ø 20 and Ø 25; ISO 6431 for cylinders from Ø 32 to Ø 100).

Bore	20	25	32	40	50	63	80	100
KK	M8x1,25	M10x1,25	M10x1,25	M12x1,25	M16x1,5	M16x1,5	M20x1,5	M20x1,5
AM	20	22	22	24	32	32	40	40
A	26	30	32	36	47	47	58	58
B	6	8	10	12	15	15	18	18
D	M4	M5	M6	M10	M12	M12	M16	M16
Weight gr.	8	15	16	27	65	65	110	110

General

This series of cylinders is available in two versions with different threaded fixing holes.
The first one includes cylinders from Ø 32 to Ø 100 called "ISO" with fixing holes same as cylinders ISO 6431 - VDMA 24562. Cylinders from Ø 20 to Ø 100 called "UNITOP", parts of second series, are mainly according to standard UNITOP RU - P/6 - P/7. Cylinders Ø 12 and Ø 16 non standard, are interchangeable with similar products available on the market. The ISO version uses all fixing devices of series 1320 with exception of intermediate trunnion, while for cylinders Ø 12, Ø 16 and for "UNITOP" version are available fixing devices as flanges, foot, male and female clevis made with aluminium or steel. For use of magnetic sensors see directions on next page.

Construction characteristics

Body	anodised aluminium
Heads	from Ø12 to Ø25 aluminium alloy UNI 9006/1 anodised from Ø32 to Ø100 UNI 5076 aluminium die-casting and painted (cataphoresis)
Piston rod bushing	sintered bronze
Piston rod	from Ø12 to Ø25 stainless steel froml Ø32 to Ø100 C43 chromed (on request stainless steel for all bores)
Piston	from Ø12 to Ø25 plated zinc steel dal Ø32 al Ø100 aluminium alloy 2011 UNI 9002/5
Seals	PUR (on request HNBR)
Spring	zinc plated steel for springs
Fixing screws	zinc plated steel

Technical characteristics

Fluid	filtered air, with or without lubrication
Maximum working pressure	10 bar
Working temperature	-30°C - +80°C with standard seals (magnetic or non magnetic piston) -5°C - +80°C with HNBR seals (magnetic piston) -5°C - +120°C with HNBR seals (non magnetic piston)

Please follow the suggestions below to ensure a long life for these cylinders:
- use clean and lubricated air
- correct alignment during assembly with regard to the applied load so as to avoid radial components or bending the rod.
- avoid high speeds together with long strokes and heavy loads: this would produce kinetic energy which the cylinder cannot absorb, especially if used as a limit stop (in this case use mechanical stop device)
- evaluate the environmental characteristics of cylinder used (high temperature, hard atmosphere, dust, humidity etc.)

Please note: air must be dried for applications with lower temperature.
Use hydraulic oils H class (ISO Vg32) for correct continued lubrication.
Our Technical Department will be glad to help.

Standard strokes for single acting cylinders

Ø12	10 mm max.
from Ø16 to Ø100	25 mm max.

Standard strokes for double acting cylinders

Ø12 and Ø16	from 5 to 40mm every 5mm
Ø20 and Ø25	from 5 to 50mm every 5mm
Ø32 - Ø100	from 5 to 80mm every 5mm

Maximum suggested strokes

Ø12 and Ø16	100 mm
Ø20 and Ø25	200 mm
Ø32 and Ø40	300 mm
Ø50 and Ø63	400 mm
Ø80 and Ø100	500 mm

Longer strokes may be utilised if there is no radial loads on piston rod considering there isn't adjustable cushioning system.

Maximum suggested strokes with non-rotating device

from Ø12 to Ø25	40 mm
from Ø32 to Ø100	80 mm

Minimum and maximum springs load

Bore	12	16	20	25	32	40	50	63	80	100
Min. load (N)	3,9	4,4	4,9	9,8	12,3	16,7	27,5	37,3	59,4	101,3
Max. load (N)	9,3	17,7	18,1	25,5	34,3	44,1	51,0	63,8	99,4	141,9

BASIC version
double and single acting

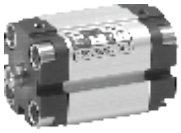

for bores from Ø 12 to Ø 25
use sensors codes
1580._, MHS._, MRS._ only

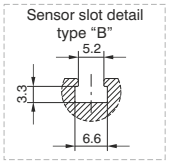

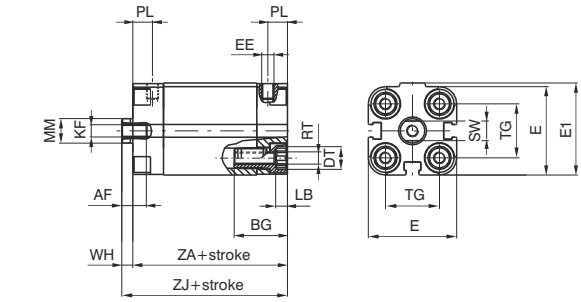

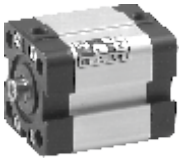

for bores from Ø 32 to Ø 50
use sensors codes
1500._, RS._, HS._ (slot A)
1580._, MHS._, MRS._
(slot B and slot A with adapter code 1380.01F)

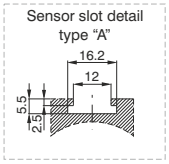

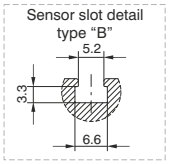

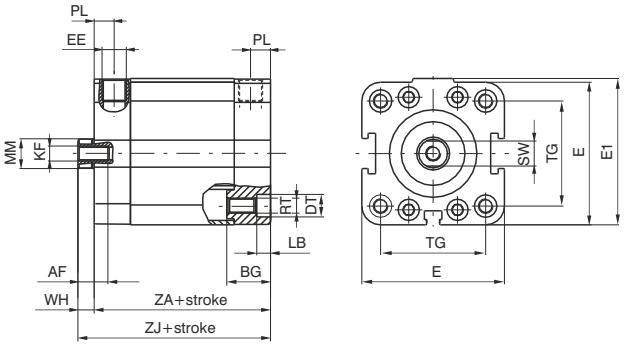

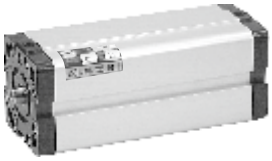

for bores from Ø 63 to Ø 100
use sensors codes
1500._, RS._, HS._ and
1580._, MHS._, MRS._
(with adapter code 1380.01F)

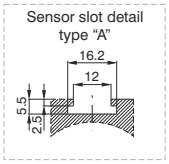

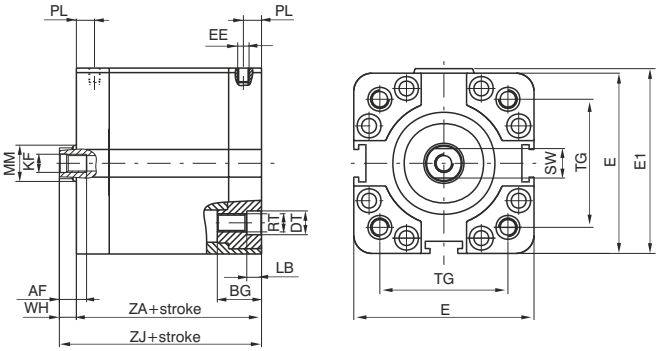

4

PUSH/PULL rod version
double and single acting

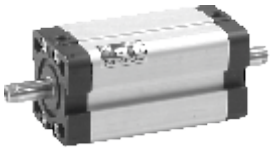

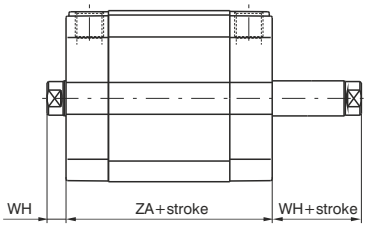

Tandem with opposite rods

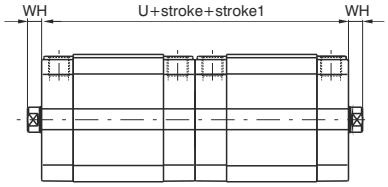

Tandem push with common rods

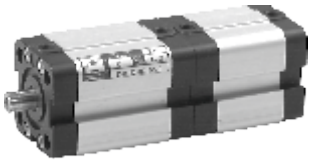

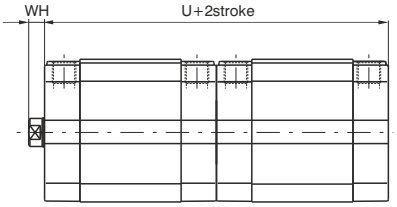

Opposed tandem with common rod

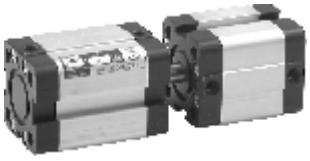

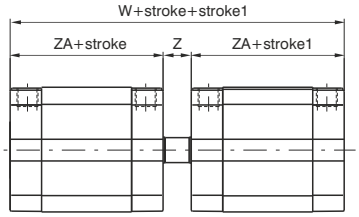

Tandem push with independent rods

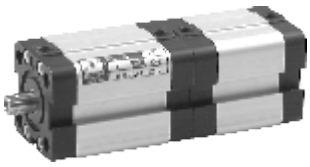

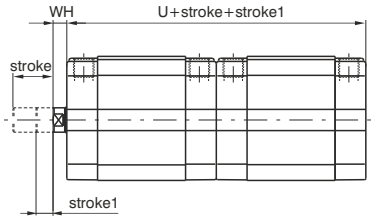

Ordering code

Basic version push/pull

15_ _. Ø . stroke . _ _ . _

- 1 = Double acting (magnetic)
- 2 = Front spring (magnetic)
- 3 = Rear spring (magnetic)
- 4 = Double acting (non magnetic)
- 5 = Front spring (non magnetic)
- 6 = Rear spring (non magnetic)

- 01 = Basic version - female piston rod
- 02 = Basic version - male piston rod
- 03 = Push / pull version - female piston rod
- 04 = Push / pull version - male piston rod
- 05 = Push / pull version - bored male piston rod
- 06 = Push / pull version - bored female piston rod
- 07 = Non - rotating version
- 08 = Push / pull version with non rotating device on one side - female piston rod *
- 09 = Push / pull version with non rotating device on one side - male piston rod *

- 1 = Chromed rod C43 (from Ø12 to Ø25 stainless steel)
- 2 = Stainless steel rod(from Ø32 to Ø100)

- 6 = ISO (Ø32 - Ø100)
- 7 = ISO HNBR (Ø32 - Ø100)
- 8 = UNITOP (Ø12 - Ø100)
- 9 = UNITOP HNBR (Ø12 - Ø100)

* for single acting version, the spring is on the anti-rotation side

Tandem version

15_ _. Ø . stroke .(stroke1) . _

- A = Tandem with opposite rods female thread
- E = Tandem with opposite rods male thread
- L = Tandem opposite rods with non rotating device on both sides
- C = Tandem push with common rods female thread
- G = Tandem push with common rods male thread
- H = Tandem push with common rods, push-pull version rod female threads
- N = Tandem push with common rods with non rotating device
- D = Opposed tandem with common rod
- B = Tandem push with independent rods female thread
- F = Tandem push with independent rods male thread
- M = Tandem push with independent rods with non rotating device
- P = Tandem push/pull with independent rods - female thread
- Q = Tandem push/pull with independent rods - male thread

- 1 = Chromed rod C43 (from Ø12 to Ø25 stainless steel)
- 2 = Stainless steel rod(from Ø32 to Ø100)

- 6 = ISO (Ø32 - Ø100)
- 7 = ISO HNBR (Ø32 - Ø100)
- 8 = UNITOP (Ø12 - Ø100)
- 9 = UNITOP HNBR (Ø12 - Ø100)

Table of dimensions

Bore		12	16	20	25	32	40	50	63	80	100
AF		6	8	10	10	12	12	12	12	16	20
BG		19	19	20	20	17.5	17.5	19.5	19.5	23.5	24.5
DT		6	6	8	8	10	9	10.5	10.5	14	14
E		29	29	36	40	48	57	67	80	102	122
E1		30	30	37.5	41.5	49.5	58.5	69	82	105	125
EE		M 5	M 5	M 5	M 5	G 1/8"	G 1/8"	G 1/8"	G 1/8"	G 1/8"	G 1/4"
KF		M 3	M 4	M 5	M 5	M 6	M 6	M 8	M 8	M 10	M12
LB		3.5	3.5	4,8	4.8	5,5	5.5	6.5	6.5	8.5	8.5
MM		6	8	10	10	12	12	16	16	20	25
PL		8	8	8	8	8	8	8	8	8.5	10.5
RT		M 4	M 4	M 5	M 5	M 6	M 6	M 8	M 8	M 10	M 10
SW		5	7	8	8	10	10	13	13	17	22
TG ISO		/	/	/	/	32.5	38	46.5	56.5	72	89
TG UNITOP		18	18	22	26	32	42	50	62	82	103
U		76	76	76	79	89	91	91	100	112	133
W		85	85	85	90	101	104	106	115	128	153
WH		4.5	4.5	4.5	5.5	6	6.5	7.5	7.5	8	10
Z		9	9	9	11	12	13	15	15	16	20
ZA	*	38	38	38	39.5	44.5	45.5	45.5	50	56	66.5
ZJ	*	42.5	42.5	42.5	45	50.5	52	53	57.5	64	76.5
Weight	stroke 0	88	90	140	170	210	320	460	690	1390	2290
gr.	every 5 mm	8	8	12	13	15	19	25	31	50	66

*** These dimensions increase of 10 mm for cylinders ø 12 front spring version.**

Tabular weights above refer to Basic Versions. The weights of Tandem versions are approximately double those shown.

Basic version male piston rod

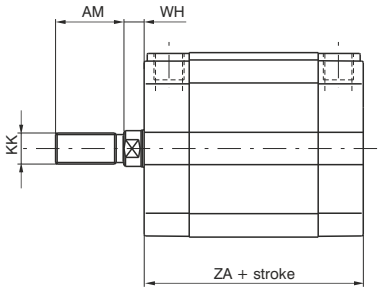

Push - pull version male rod

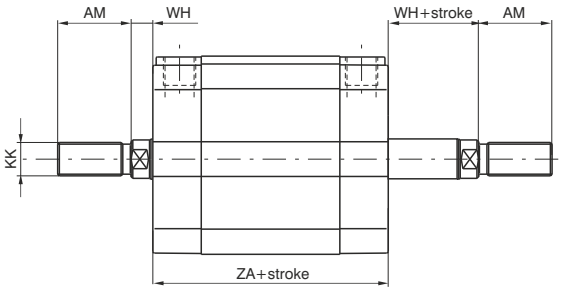

Push - pull version bored male piston rod

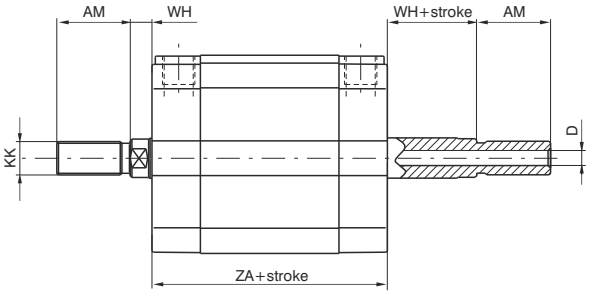

Push - pull version bored female piston rod

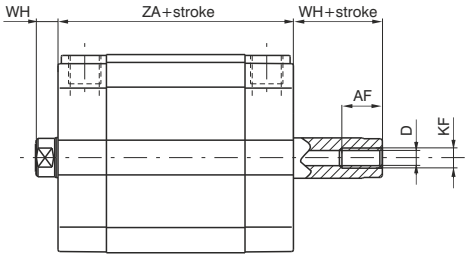

Maximum allowed stroke = ZB (see table)

Non-rotating version

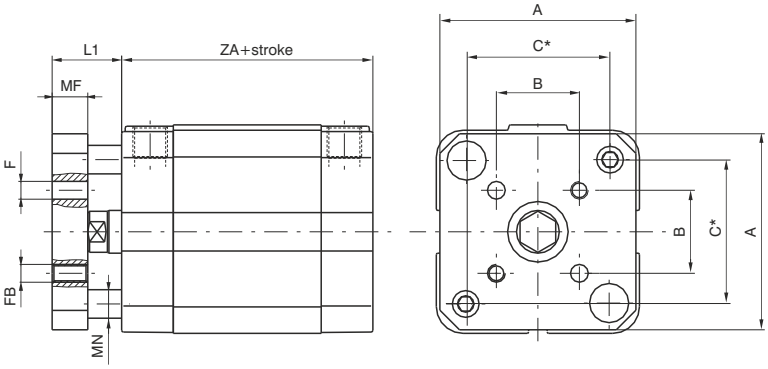

* = Distance between rods centres

Bore	12	16	20	25	32	40	50	63	80	100
A	28.5	28.5	35.5	39.5	45	55	65	80	100	120
AF	6	8	10	10	12	12	12	12	16	20
AM	16	20	22	22	22	22	24	24	32	40
B	9.9	9.9	12	15.6	19.8	23.3	29.7	35.4	46	56.6
C	18	18	22	26	34	40.5	49	59.5	77	94
D	2.3	3.2	3.8	3.8	4.5	4.5	6	6	8	10
F	3	3	4	5	5	5	6	6	8	10
FB	M 3	M 3	M 4	M 5	M 5	M 5	M 6	M 6	M 8	M 10
KF	M 3	M 4	M 5	M 5	M 6	M 6	M 8	M 8	M 10	M 12
KK	M6X1	M8X1.25	M10X1.25	M10X1.25	M10X1.25	M10X1.25	M12X1.25	M12X1.25	M16X1.5	M20X1.5
L1	10.5	10.5	12.5	13.5	16	16.5	19.5	19.5	22	24
MF	6	6	8	8	10	10	12	12	14	14
MN	5	5	6	6	8	8	10	10	12	12
WH	4.5	4.5	4.5	5.5	6	6.5	7.5	7.5	8	10
ZA	38	38	38	39.5	44.5	45.5	45.5	50	56	66.5
ZB	20	25	50	50	50	50	75	75	80	80

Front and rear flanges

Ordering code

ISO
1500.Ø.03F
steel

UNITOP
1580.Ø.03F
steel

1580.Ø.03/1F
aluminium

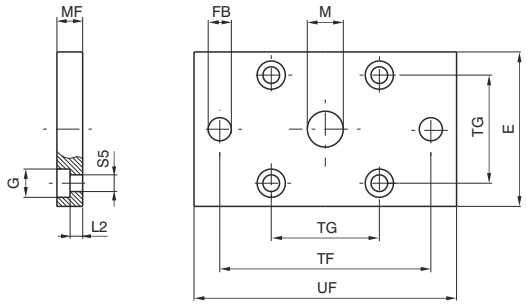

For bores from 12 to 25

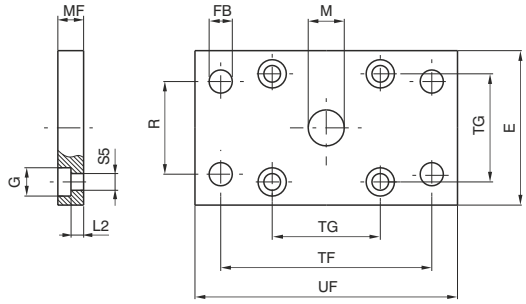

For bores from 32 to 100

Plate which allows anchorage of the cylinder at a right angle to the plane. It is made with zinc-plated extruded steel or with aluminium.

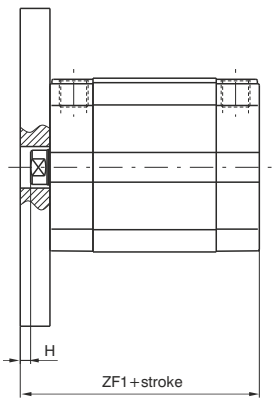

Front

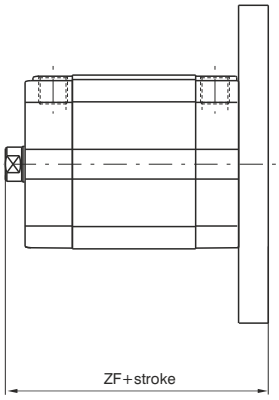

Rear

		ISO Dimensions						UNITOP Dimensions								
Bore		32	40	50	63	80	100	12-16	20	25	32	40	50	63	80	100
E		45	52	65	75	95	115	29	36	40	50	60	68	87	107	128
S5 (H13)		6,6	6,6	9	9	11	11	4,5	5,5	5,5	6,6	6,6	9	9	11	11
FB(H13)		7	9	9	9	12	14	5,5	6,6	6,6	7	9	9	9	12	14
G		10,5	11	15	15	18	18	9	10	10	11	11	15	15	18	18
H		4	3,5	4,5	4,5	8	6	5,5	5,5	4,5	4	3,5	4,5	7,5	7	5
L2		5	5	6,5	6,5	8	8	4,6	4,6	4,6	3,6	3,6	3,4	6,4	4,4	4,4
M(H11)		30	35	40	45	45	55	10	12	12	14	14	18	18	23	28
MF(JS14)		10	10	12	12	16	16	10	10	10	10	10	12	15	15	15
R(JS14)		32	36	45	50	63	75	/	/	/	32	36	45	50	63	75
TF(JS14)		64	72	90	100	126	150	43	55	60	65	82	90	110	135	163
TG		32,5	38	46,5	56,5	72	89	18	22	26	32	42	50	62	82	103
UF		80	90	110	120	150	170	55	70	76	80	102	110	130	160	190
ZF		60,5	62	65	69,5	80	92,5	52,5	52,5	55	60,5	62	65	72,5	79	91,5
ZF1		54,5	55,5	57,5	62	72	82,5	48	48	49,5	54,5	55,5	57,5	65	71	81,5
Weight	Steel	160	250	480	620	1430	1970	100	170	210	270	430	600	1210	1810	2610
gr.	Aluminium	/	/	/	/	/	/	35	60	70	90	150	210	420	630	900

Foot

Ordering code

ISO
1500.Ø.05/1F
(1 piece)
UNITOP
1580.Ø.05/1F
(1 piece)

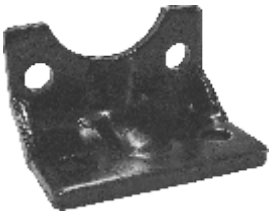

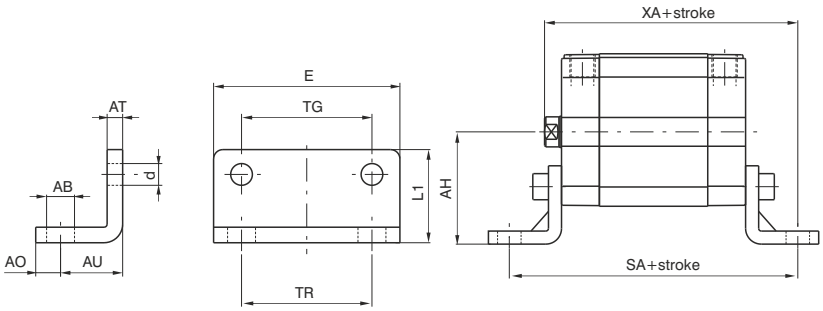

Element used to anchor the cylinder parallel to the mounting plane. They are made with stamped and pierced sheet metal black painted.

	ISO Dimensions						UNITOP Dimensions								
Bore	32	40	50	63	80	100	12-16	20	25	32	40	50	63	80	100
AB (H14)	7	9	9	9	12	14	5.5	6.6	6.6	6.6	9	9	11	11	13.5
AH (JS15)	32	36	45	50	63	71	22	27	30	32	42.5	47	59.5	65.5	78
AO (±0.2)	11	8	15	13	14	16	4.5	6	6	8	8	8	12	12	12
AT	4	4	5	5	6	6	3	4	4	5	5	6	6	8	8
AU (±0.2)	24	28	32	32	41	41	13	16	16	18	20	24	27	30	33
d	7	7	9	9	11	11	4.4	5.4	5.4	6.6	6.6	9	9	11	11
E	45	52	65	75	95	115	30	36	40	50	60	68	84	102	123
L1	30	30	36	35	47	53	17.5	22	23	24	29.5	30	39	36.5	38.5
SA	92.5	101.5	109.5	114	138	148.5	64	70	71.5	80.5	85.5	93.5	104	116	132.5
TG	32.5	38	46.5	56.5	72	89	18	22	26	32	42	50	62	82	103
TR	32	36	45	50	63	75	18	22	26	32	42	50	62	82	103
XA	74.5	80	85	89.5	105	117.5	55.5	58.5	61	68.5	72	77	84.5	94	109.5
Weight gr.	50	70	120	180	320	400	20	35	45	75	100	150	250	390	500

UNITOP rear male clevis for bores from 12 to 25

Ordering code

1580.Ø.09/1F (Aluminium)
1580.Ø.09/2F (Steel)

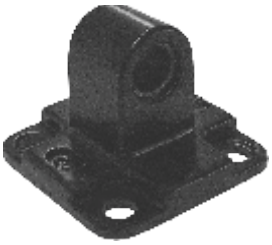

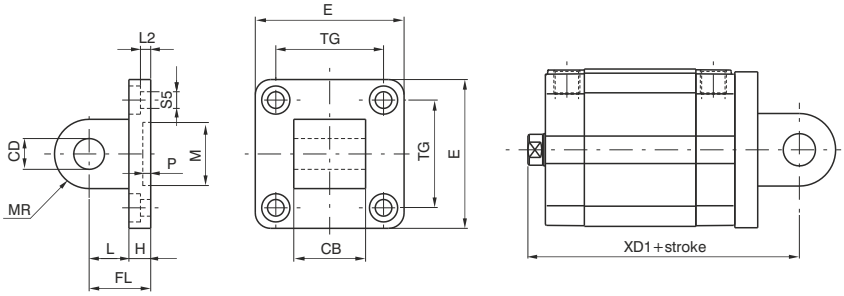

This type of mounting allows anchorage of the cylinder both parallel and at the right angle to the plane. The cylinder rod can oscillate and self-align to the connected load. It's made with aluminium alloy black painted or with zinc plated steel (from Ø 20).

Bore		12-16	20	25
CB(h14)		12	16	16
CD (H9)		6	8	8
E (±0.5)		27	34	38
FL		16	20	20
H		6	6	6
L		10	14	14
L2 (±0.5)		2.6	2.6	2.6
M (H11)		10	12	12
MR		6	8	8
P (+0.3)		3	3	3
S5 (H13)		4.5	5.5	5.5
TG (±0.2)		18	22	26
XD1		58.5	62.5	65
Weight gr.	Steel	/	70	80
	Aluminium	13	25	28

Front female clevis for bores from 32 to 100

Ordering code
ISO Aluminium **1500.Ø.08F** *UNITOP* (Aluminium) **1580.Ø.11F** *UNITOP* (Steel) **1580.Ø.13F**

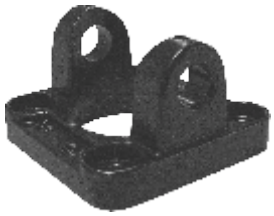

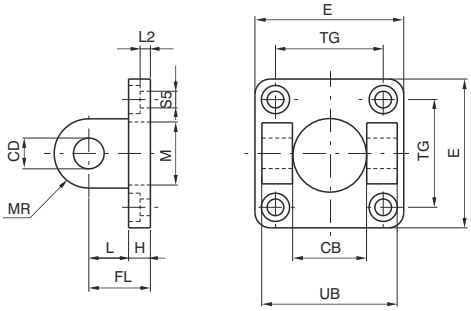

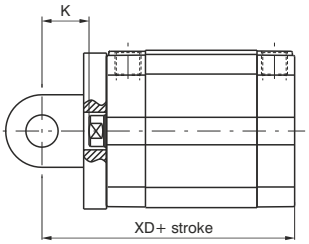

This type of mounting allows anchorage of the cylinder both parallel and at the right angle to the plane. The cylinder rod can oscillate and self-align to the connected load. It's made with aluminium alloy black painted or with zinc plated steel.

Rear female clevis for bores from 32 to 100

Ordering code
ISO Aluminium **1500.Ø.09F** *UNITOP* (Aluminium) **1580.Ø.10F** *UNITOP* (Steel) **1580.Ø.12F**

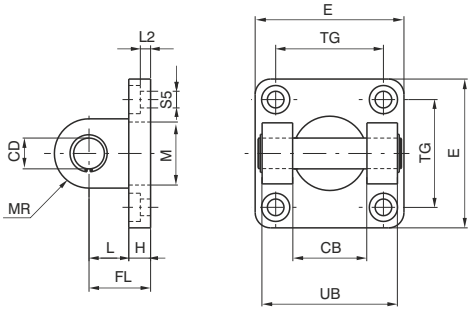

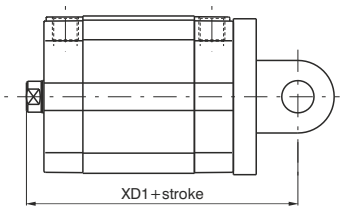

This type of mounting allows anchorage of the cylinder both parallel and at the right angle to the plane. The cylinder rod can oscillate and self-align to the connected load. It's made with aluminium alloy black painted or with zinc plated steel.

			ISO Dimensions						UNITOP Dimensions					
Bore			32	40	50	63	80	100	32	40	50	63	80	100
CB (H14)			26	28	32	40	50	60	26	28	32	40	50	60
CD (H9)			10	12	12	16	16	20	10	12	12	16	16	20
E			45	52	65	75	95	115	48	58	66	83	102	123
FL			22	25	27	32	36	41	22	25	27	32	36	41
H			9	9	11	11	14	14	9	9	11	11	13	15
K			16	18.5	19.5	24.5	28	31	16	18.5	19.5	24.5	28	31
L			13	16	16	21	22	27	13	16	16	21	23	26
L2			5.5	5.5	6.5	6.5	10	10	5,5	5.5	6.5	6.5	10	10
M			30	35	40	45	45	55	14	14	18	18	23	28
MR			10	12	12	16	16	20	10	12.5	12.5	15	15	20
S5			6.6	6.6	9	9	11	11	6.6	6.6	9	9	11	11
TG			32.5	38	46.5	56.5	72	89	32	42	50	62	82	103
UB			45	52	60	70	90	110	45	52	60	70	90	110
XD			66.5	70.5	72.5	82	92	107.5	66.5	70.5	72.5	82	92	107.5
XD1			72.5	77	80	89.5	100	117.5	72.5	77	80	89.5	100	117.5
Weight gr.	Steel	Front	/	/	/	/	/	/	180	310	420	700	1240	2210
		Rear	/	/	/	/	/	/	220	360	480	830	1390	2500
	Alum.	Front	40	70	120	170	360	570	65	110	145	240	430	770
		Rear	80	120	180	300	500	860	80	125	170	290	480	865

Slot fixing screws

Ordering code
1500.17F small slot (from Ø12 to Ø50) **1500.15F** large slot (Ø32) **1500.16F** large slot (from Ø40 to Ø63) **1500.18F** large slot (from Ø80 to Ø100)

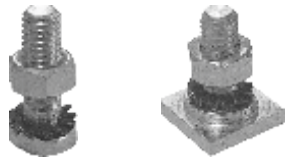

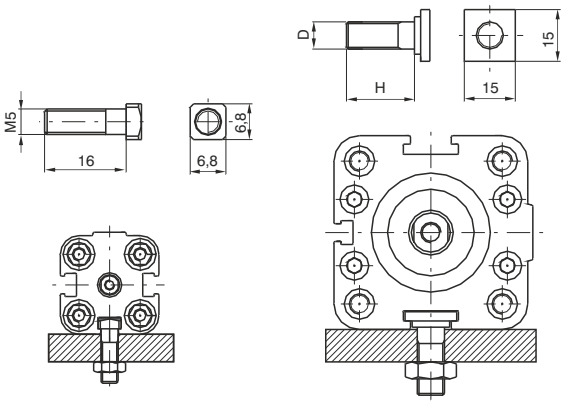

Example of mounting with square head screws

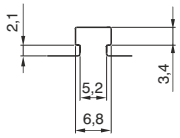

Small slot detail

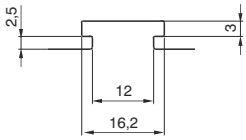

Large slot detail

Bore	12 - 50	32	40 - 63	80 - 100
D	/	M6	M8	M10
H	/	15	20	25
Weight gr.	8	10	18	25

Centering rings

Ordering code
1580.Ø.02F

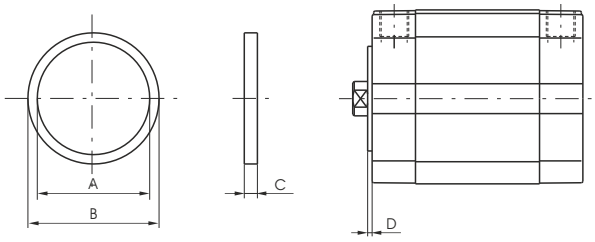

This aluminium ring allows the center assembling of the cylinder.

Bore	32	40	50	63	80	100
A	25	30	35	40	40	50
B (e11)	30	35	40	45	45	55
C	3,5	3,5	3,5	4,5	5,5	5,5
D	1,5	1,5	1,5	2	2,5	2,5
Weight gr.	2	2	3	4	5	6

Sensor adapter

Ordering code
1380.01F

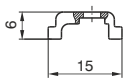

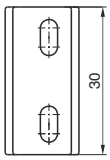

Weight gr. 2

Nylon accessory for sensor mounting 1580._, MRS._, MHS._ inside "A" shape.

General

These cylinders are built according to ISO 21287 standards. New barrel profile has two sensor slots on the three sides (Ø20 and Ø25 one slot) suitable for sensors 1580._, MRS._, MHS._ series housing, without need for adaptors.
Versions with end stroke adjustable pneumatic cushioning are also available, allowing adjustments to deceleration and keeping the required overall dimensions according to ISO 21287.
For fixing operation is possible to use the four threaded holes on the end covers, or screws in body holes, alternatively all the fixing devices of UNITOP RU-P/6-P/7 (Ø20 and Ø25) and ISO 15552 (from Ø32 to Ø100) series.

Construction characteristics

Body	anodised aluminium
End cap	aluminium alloy casting painted
Bearing piston rod	sintered bronze
Piston rod	from Ø20 to Ø25 stainless steel from Ø32 to Ø100 C43 chromed (on request stainless steel)
Piston	from Ø20 to Ø40 acetal resin (aluminium on request), Ø50 and Ø100 aluminium (with FPM seals, aluminium piston for all standard diameters)
Seals	Standard: NBR Oil resistant rubber, PUR Piston rod seals (PUR or FPM seals available upon request)
Spring	stainless steel
Fixing screws	plated zinc steel

Technical characteristics

Fluid	filtered and preferably lubricated air, or non-lubricated (if air is lubricated, the lubrication must be constant)
Max. pressure	10 bar
Operating temperature	-5°C - +70°C with standard seals (magnetic or non magnetic piston) -30°C - +80°C with PUR seals (magnetic or non magnetic piston) -5°C - +80°C with FPM seals (magnetic piston) -5°C - +150°C with FPM seals (non magnetic piston)

4

Please follow the suggestions below to ensure a long life for these cylinders:
- use clean and lubricated air
- correct alignment during assembly with regard to the applied load so as to avoid radial components or bending the rod.
- avoid high speeds together with long strokes and heavy loads: this would produce kinetic energy which the cylinder cannot absorb, especially if used as a limit stop (in this case use mechanical stop device and aluminium piston)
- evaluate the environmental characteristics of cylinder used (high temperature, hard atmosphere, dust, humidity etc.)

Please note: air must be dried for applications with lower temperature.
Use hydraulic oils H class (ISO Vg32) for correct continued lubrication.
Our Technical Department will be glad to help.

Stroke tolerance, minimum and maximum spring loads and cushioning length

Bore	Stroke tolerance	Minimum and maximum springs load		Cushioning length
(mm)	(mm)	(N)		(mm)
		min.	max.	
Ø20	+1.5 / 0 mm	10.8	19.6	/
Ø25		16.7	22.6	5
Ø32	+2 / 0 mm	19.6	25.5	6.5
Ø40		25.5	42.2	8
Ø50		44.1	96.3	7.5
Ø63	+2.5 / 0mm	44.1	96.3	7.5
Ø80		63.8	100.1	8
Ø100		107.9	193.3	12

Standard stroke

DOUBLE ACTING BASIC version and PUSH/PULL ROD

Bore	Stroke 5	10	15	20	25	30	35	40	45	50	55	60	65	70	75	80	100	125	150	160	200	250	300	320	350	400	450	500
	WITHOUT CUSHIONING DEVICE																											
Ø20	●	●	●	●	●	●	●	●	●	●	●	●	●	●	●	●	●	●	●	●	●							
Ø25	●	●	●	●	●	●	●	●	●	●	●	●	●	●	●	●	●	●	●	●	●							
Ø32	●	●	●	●	●	●	●	●	●	●	●	●	●	●	●	●	●	●	●	●	●	●	●					
Ø40	●	●	●	●	●	●	●	●	●	●	●	●	●	●	●	●	●	●	●	●	●	●	●					
Ø50	●	●	●	●	●	●	●	●	●	●	●	●	●	●	●	●	●	●	●	●	●	●	●	●	●	●		
Ø63	●	●	●	●	●	●	●	●	●	●	●	●	●	●	●	●	●	●	●	●	●	●	●	●	●	●		
Ø80	●	●	●	●	●	●	●	●	●	●	●	●	●	●	●	●	●	●	●	●	●	●	●	●	●	●	●	●
Ø100	●	●	●	●	●	●	●	●	●	●	●	●	●	●	●	●	●	●	●	●	●	●	●	●	●	●	●	●
	WITH CUSHIONING DEVICE																											
Ø20																												
Ø25					●	●	●	●	●	●	●	●	●	●	●	●	●	●	●	●	●							
Ø32					●	●	●	●	●	●	●	●	●	●	●	●	●	●	●	●	●	●	●					
Ø40					●	●	●	●	●	●	●	●	●	●	●	●	●	●	●	●	●	●	●					
Ø50					●	●	●	●	●	●	●	●	●	●	●	●	●	●	●	●	●	●	●	●	●	●		
Ø63					●	●	●	●	●	●	●	●	●	●	●	●	●	●	●	●	●	●	●	●	●	●		
Ø80					●	●	●	●	●	●	●	●	●	●	●	●	●	●	●	●	●	●	●	●	●	●	●	●
Ø100					●	●	●	●	●	●	●	●	●	●	●	●	●	●	●	●	●	●	●	●	●	●	●	●

DOUBLE ACTING PUSH/PULL ROD BORED version

Bore	Stroke 5	10	15	20	25	30	35	40	45	50	55	60	65	70	75	80	25	30	35	40	45	50	55	60	65	70	75	80
	WITHOUT CUSHIONING DEVICE																WITH CUSHIONING DEVICE											
Ø20	●	●	●	●	●	●	●	●	●	●																		
Ø25	●	●	●	●	●	●	●	●	●	●							●	●	●	●	●	●						
Ø32	●	●	●	●	●	●	●	●	●	●							●	●	●	●	●	●						
Ø40	●	●	●	●	●	●	●	●	●	●							●	●	●	●	●	●						
Ø50	●	●	●	●	●	●	●	●	●	●	●	●	●	●	●		●	●	●	●	●	●	●	●	●	●	●	
Ø63	●	●	●	●	●	●	●	●	●	●	●	●	●	●	●		●	●	●	●	●	●	●	●	●	●	●	
Ø80	●	●	●	●	●	●	●	●	●	●	●	●	●	●	●	●	●	●	●	●	●	●	●	●	●	●	●	●
Ø100	●	●	●	●	●	●	●	●	●	●	●	●	●	●	●	●	●	●	●	●	●	●	●	●	●	●	●	●

DOUBLE ACTING version WITH NON-ROTATING DEVICE

Bore	Stroke 5	10	15	20	25	30	35	40	45	50	55	60	65	70	75	80	25	30	35	40	45	50	55	60	65	70	75	80
	WITHOUT CUSHIONING DEVICE																WITH CUSHIONING DEVICE											
Ø20	●	●	●	●	●	●	●	●																				
Ø25	●	●	●	●	●	●	●	●									●	●	●	●								
Ø32	●	●	●	●	●	●	●	●	●	●	●	●	●	●	●	●	●	●	●	●	●	●	●	●	●	●	●	●
Ø40	●	●	●	●	●	●	●	●	●	●	●	●	●	●	●	●	●	●	●	●	●	●	●	●	●	●	●	●
Ø50	●	●	●	●	●	●	●	●	●	●	●	●	●	●	●	●	●	●	●	●	●	●	●	●	●	●	●	●
Ø63	●	●	●	●	●	●	●	●	●	●	●	●	●	●	●	●	●	●	●	●	●	●	●	●	●	●	●	●
Ø80	●	●	●	●	●	●	●	●	●	●	●	●	●	●	●	●	●	●	●	●	●	●	●	●	●	●	●	●
Ø100	●	●	●	●	●	●	●	●	●	●	●	●	●	●	●	●	●	●	●	●	●	●	●	●	●	●	●	●

SINGLE ACTING version

Bore	Stroke 5	10	15	20	25
Ø20	●	●	●	●	●
Ø25	●	●	●	●	●
Ø32	●	●	●	●	●
Ø40	●	●	●	●	●
Ø50	●	●	●	●	●
Ø63	●	●	●	●	●
Ø80	●	●	●	●	●
Ø100	●	●	●	●	●

BASIC version
double and single acting

Ø20 and Ø25

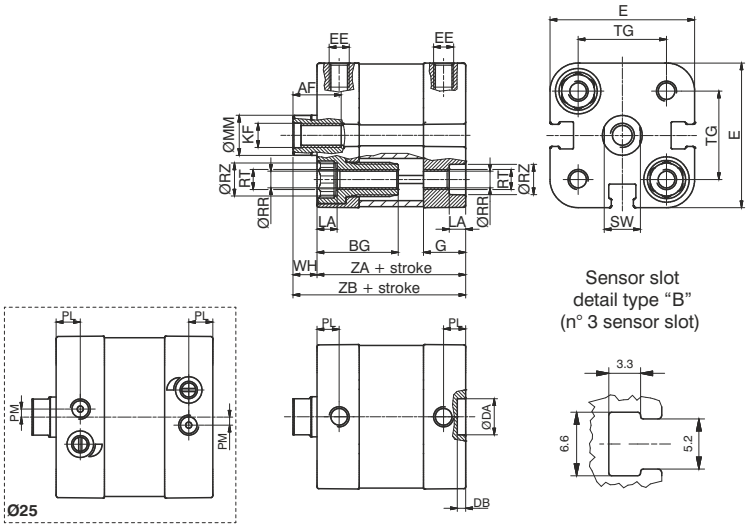

from Ø32 to Ø63

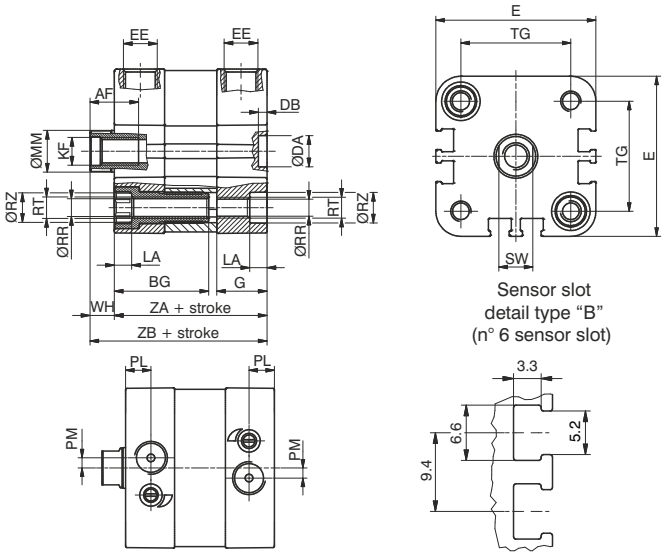

Ø80 and Ø100

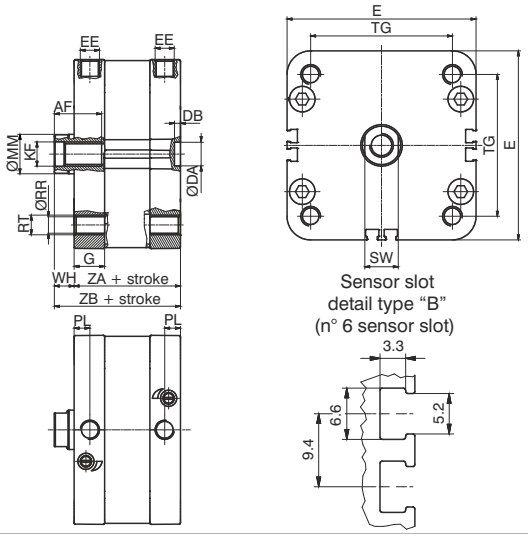

PUSH/PULL rod version
double and single acting

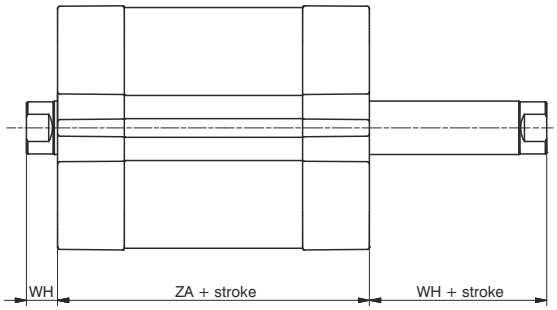

TANDEM version


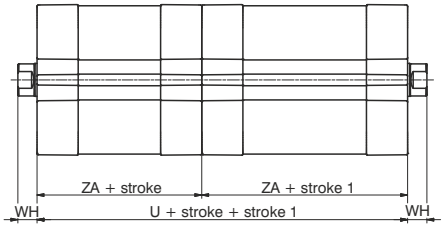

Tandem with opposed rods

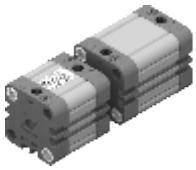
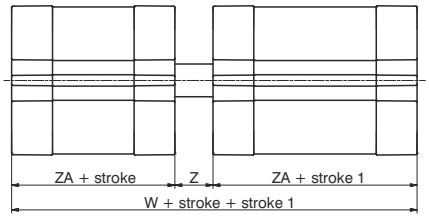

Opposed tandem with common rods


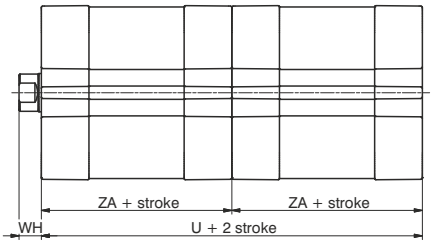

Tandem push with common rod


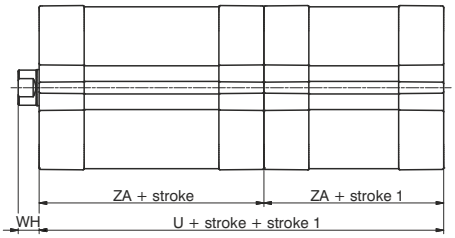

Tandem push with independent rod

Ordering code

Basic and push/pull version

15 _ _.Ø.stroke. _ _ . _

- **1**= magnetic piston, Double acting
- **2**= magnetic piston, Single acting with front spring
- **3**= magnetic piston, Single acting with rear spring
- **4**= non magnetic piston, Double acting
- **5**= non magnetic piston, Single acting with front spring
- **6**= non magnetic piston, Single acting with rear spring

- **01**= Basic, female threaded rod
- **02**= Basic, male threaded rod
- **03**= through rod, female threaded rod
- **04**= through rod, male threaded rod
- **05**= through rod, bored female threaded rod **
- **06**= through rod, bored male threaded rod
- **07**= with non-rotating device
- **08**= through rod, female threaded rod, with non-rot. device on one side ***
- **09**= through rod, male threaded rod, with non-rot. device on one side ***

- **0**=NBR seals and C43 chromed plated rod*
- **1**=NBR seals and stainless steel rod (starting from bore Ø32)
- **4**=PUR seals and C43 chromed plated rod *
- **5**=PUR seals and stainless steel rod (starting from bore Ø32)
- **6**=FPM seals and C43 chromed plated rod*
- **7**=FPM seals and stainless steel rod (starting from bore Ø32)

* (Ø20 and Ø25 stainless steel)

- **4**=Non-cushioned versions (mechanical cushioning only)
- **5**=Versions with adjustable end of stroke cushioning system (from Ø25)

** It is possible to order the Ø20, Ø25, Ø32 and Ø40 cylinders with an aluminium piston by replacing the '0' with 'K' in the ordering code.
Example: 1540.20.10.01.1 (Acetyl Resin Piston)
1540.20.10.K1.1 (Aluminium Piston version)
*** for single acting version, the spring is on the anti-rotation side

TANDEM version (magnetic pistons)

15 _ _ . Ø .stroke. (stroke 1) . _

C= female threaded rod **G**= male threaded rod **H**= with through rod and female threaded rod **R**= with through rod and male threaded rod **N**= with non-rotating device	**Tandem push with common rods**
B= female threaded rod **F**= male threaded rod **M**= with non-rotating device **P**= with through rod and female threaded rod **Q**= with through rod and male threaded rod	**Tandem push with independent rods**
D= **Opposed tandem with common rod**	
A= female threaded rod **E**= male threaded rod **L**= with non-rotating device on both ends	**Tandem with opposite rods**

- **0**=NBR seals and C43 chromed plated rod*
- **1**=NBR seals and stainless steel rod (starting from bore Ø32)
- **4**=PUR seals and C43 chromed plated rod*
- **5**=PUR seals and stainless steel rod (starting from bore Ø32)
- **6**=FPM seals and C43 chromed plated rod*
- **7**=FPM seals and stainless steel rod (starting from bore Ø32)

* (Ø20 and Ø25 stainless steel)

- **4**= Non-cushioned version (mechanical cushioning only)
- **5**= Versions with adjustable end of stroke cushioning system (from Ø25)

Seals compounds scheme: **NBR** oil resistant nitrilic rubber
PUR: polyurethane seals **FPM**: fluoropolymer rubber seals

Table of dimensions

Bore		Ø20	Ø25	Ø32	Ø40	Ø50	Ø63	Ø80	Ø100
AF (min)		12	12	14	14	18	18	24	24
BG		20	20	16	16	16	16	/	/
DA (H9)	Ø	9	9	9	9	12	12	12	12
DB (+0.1/0)		2.1	2.1	2.5	2.5	2.6	2.6	3	3
E (max)		36	40.5	47.5	55	66	78	96	116
EE		M5	M5	G1/8	G1/8	G1/8	G1/8	G1/8	G1/8
G		10.5	12	14.5	15	15	15	15.5	18.5
KF		M6	M6	M8	M8	M10	M10	M12	M12
LA (0/-0.1)		4.1	4.1	5	5	5	5	/	/
MM (f 7)	Ø	10	10	12	12	16	16	20	25
PL (+0.1/0)		5.5	6	7.5	8	8	8	8	8
PM		/	2	3	/	/	/	/	/
RR (min)	Ø	4.1	4.1	5.1	5.1	6.6	6.6	8.4	8.4
RT		M5	M5	M6	M6	M8	M8	M10	M10
RZ (min)	Ø	7.5	7.5	8.5	8.5	10.5	10.5	/	/
SW (0/-0.1)		9	9	10	10	13	13	17	22
TG (±0.2)		22	26	32.5	38	46.5	56.5	72	89
U		74	78	88	90	90	98	108	134
W		83	89	100	103	105	113	124	154
WH (±1)		6	6	7	7	8	8	10	10
Z		9	11	12	13	15	15	16	20
ZA (±0.5)		37	39	44	45	45	49	54	67
ZB (+1/0)		43	45	51	52	53	57	64	77
Weight	stroke	105	110	200	270	420	550	760	1400
gr.	every 5mm	10	10.5	13	17	23.5	27	37	51

Basic version male piston rod

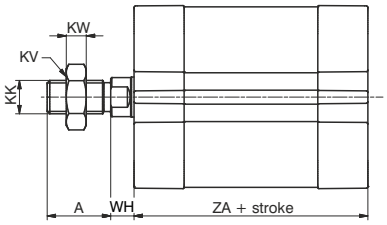

Push/pull version male rod

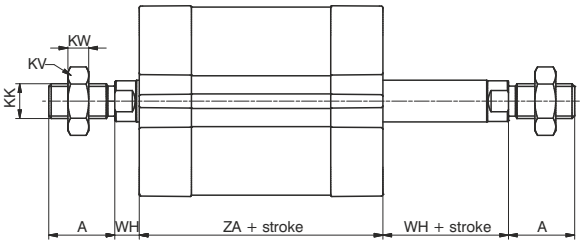

Push - pull version bored female piston rod

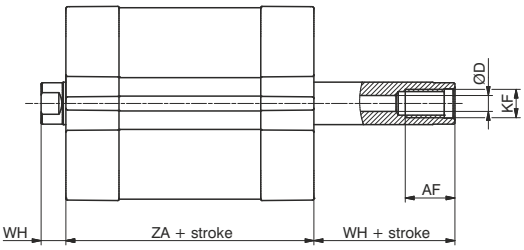

Push - pull version bored male piston rod

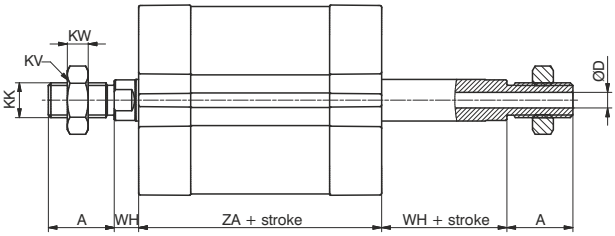

Non-rotating version

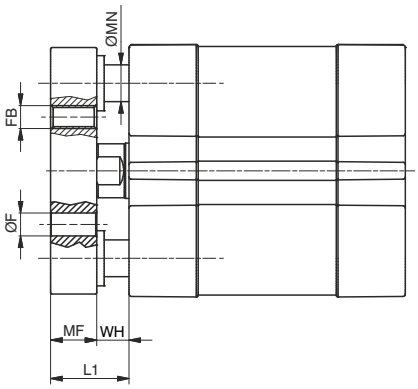

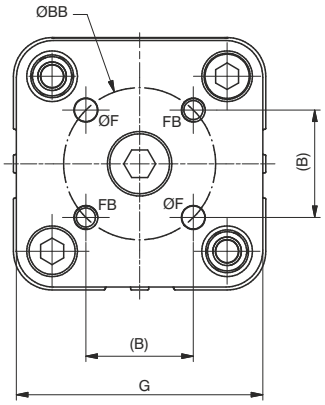

Bore		Ø20	Ø25	Ø32	Ø40	Ø50	Ø63	Ø80	Ø100
A (0/-0.5)		16	16	19	19	22	22	28	28
AF (min)		12	12	14	14	18	18	24	24
B		12	15.6	19.8	23.3	29.7	35.4	46	56.6
BB (±0.1)	Ø	17	22	28	33	42	50	65	80
D	Ø	3	3.8	4.5	4.5	6	6	8	10
F (+0.1/0)	Ø	4	5	5	5	6	6	8	10
FB		M4	M5	M5	M5	M6	M6	M8	M10
G		35	39.5	45	52	65	75	95	115
KF		M6	M6	M8	M8	M10	M10	M12	M12
KK		M8x1.25	M8x1.25	M10x1.25	M10x1.25	M12x1.25	M12x1.25	M16x1.5	M16x1.5
KV		13	13	17	17	19	19	24	24
KW		5	5	6	6	7	7	8	8
L1		14	14	17	17	20	20	24	24
MF (+0.1/0)		8	8	10	10	12	12	14	14
MN (f 7)	Ø	6	6	8	8	10	10	12	12
WH (±1)		6	6	7	7	8	8	10	10
ZA (±0,5)		37	39	44	45	45	49	54	67

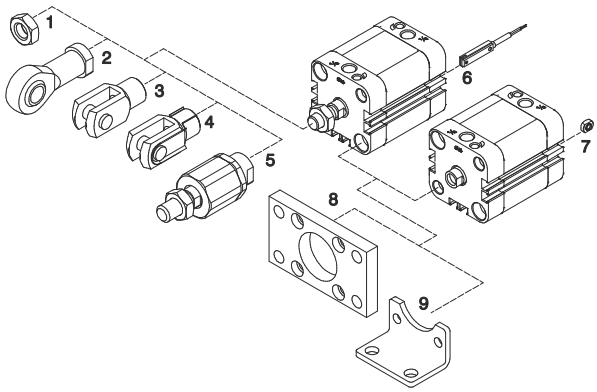

Sensor and piston rod accessories

Pos.	Description	Ordering code	
1	Rod lock nut	**1200.20.06** **1320.32.18F** **1320.40.18F** **1320.50.18F**	(Ø20-Ø25) (Ø32-Ø40) (Ø50-Ø63) (Ø80-Ø100)
2	Ball joint	**1200.20.32F** **1320.32.32F** **1320.40.32F** **1320.50.32F**	(Ø20-Ø25) (Ø32-Ø40) (Ø50-Ø63) (Ø80-Ø100)
3	Fork	**1200.20.04** **1320.32.13F** **1320.40.13F** **1320.50.13F**	(Ø20-Ø25) (Ø32-Ø40) (Ø50-Ø63) (Ø80-Ø100)
4	Fork with clips	**1200.20.04/1** **1320.32.13/1F** **1320.40.13/1F** **1320.50.13/1F**	(Ø20-Ø25) (Ø32-Ø40) (Ø50-Ø63) (Ø80-Ø100)
5	Self-aligning joint	**1200.20.33F** **1320.32.33F** **1320.40.33F** **1320.50.33F**	(Ø20-Ø25) (Ø32-Ø40) (Ø50-Ø63) (Ø80-Ø100)
6	Sensors	(See chapter 6 magnetic sensors)	
7	Valves direct mounting bolt	**1500.20F**	(Ø20 - Ø100)

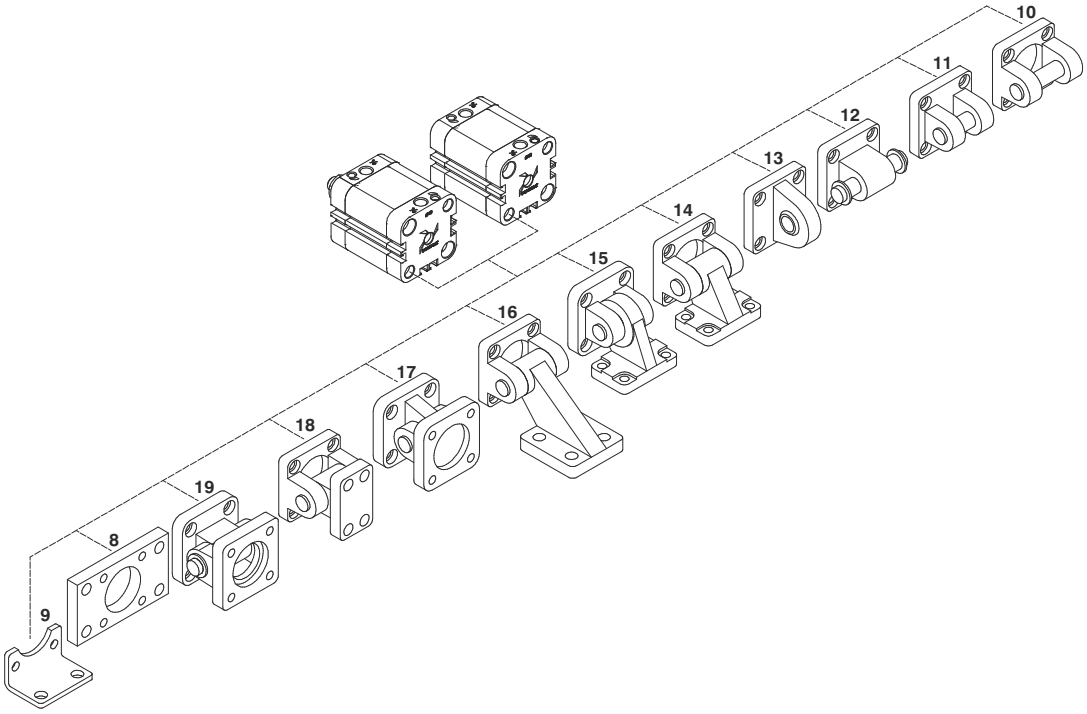

Fixing

Pos.	Description	Ordering code			
		Aluminium		Steel	
8	Flange (MF2)	/		**1540.Ø.03F** **1380.Ø.03F**	(Ø20 - Ø25) (Ø32 - Ø100)
9	Foot (MS1)	/		**1540.Ø.05/1F**	(Ø20 - Ø100)
10	Rear female clevis (MP2)	**1380.Ø.09F**	(Ø32 - Ø100)	**1320.Ø.20F**	(Ø32 - Ø100)
11	Narrow rear female trunnion (AB6)	**1380.Ø.30F**	(Ø32 - Ø100)	**1320.Ø.29F**	(Ø32 - Ø100)
12	Rear male clevis (MP4)	**1580.Ø.09/1F** **1380.Ø.09/1F**	(Ø20 - Ø25) (Ø32 - Ø100)	**1580.Ø.09/2F** **1320.Ø.21F**	(Ø20 - Ø25) (Ø32 - Ø100)
13	Rear male clevis (with jointed head - MP6)	**1380.Ø.15F**	(Ø32 - Ø100)	**1320.Ø.25F**	(Ø32 - Ø100)
14	Square angle trunnion (AB7)	**1380.Ø.35F**	(Ø32 - Ø100)	**1320.Ø.23F**	(Ø32 - Ø100)
15	Square angle trunnion (with joined head)			**1320.Ø.27F**	(Ø32 - Ø100)
16	Square angle trunnion (not specified by ISO 15552)	**1380.Ø.11F**	(Ø32 - Ø100)	/	
17	Standard trunnion (with joined head)	**1380.Ø.36F**	(Ø32 - Ø100)	**1320.Ø.26F**	(Ø32 - Ø100)
18	Standard trunnion (not specified by ISO 15552)	**1380.Ø.10F**	(Ø32 - Ø100)	/	
19	Complete standard trunnion	/		**1320.Ø.22F**	(Ø32 - Ø100)

Rod lock nut

Ordering code	
Ø20-Ø25:	**1200.20.06**
Ø32-Ø40:	**1320.32.18F**
Ø50-Ø63:	**1320.40.18F**
Ø80-Ø100:	**1320.50.18F**

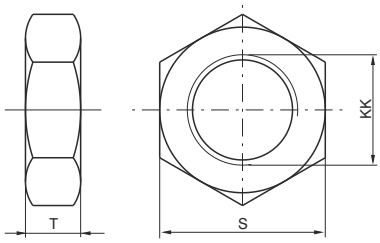

Bore	Ø20	Ø25	Ø32	Ø40	Ø50	Ø63	Ø80	Ø100
S	13	13	17	17	19	19	24	24
T	5	5	6	6	7	7	8	8
KK	M8x1.25	M8x1.25	M10x1.25	M10x1.25	M12x1.25	M12x1.25	M16x1.5	M16x1.5
Weight gr.	12	12	15	15	20	20	20	20

Ball joint

Ordering code	
Ø20-Ø25:	**1200.20.32F**
Ø32-Ø40:	**1320.32.32F**
Ø50-Ø63:	**1320.40.32F**
Ø80-Ø100:	**1320.50.32F**

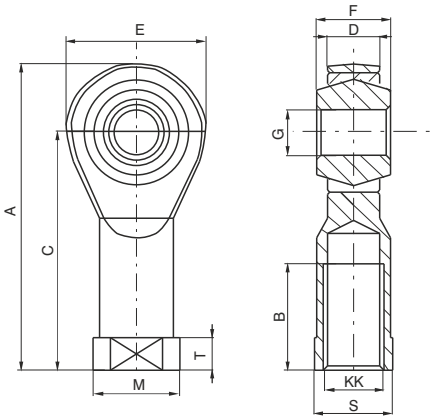

Bore	Ø20	Ø25	Ø32	Ø40	Ø50	Ø63	Ø80	Ø100
A	48	48	57	57	66	66	85	85
B	16	16	20	20	22	22	28	28
C	36	36	43	43	50	50	64	64
D (-0.1)	9	9	10.5	10.5	12	12	15	15
E	24	24	28	28	32	32	42	42
F	12	12	14	14	16	16	21	21
G (H7)	8	8	10	10	12	12	16	16
KK	M8x1.25	M8x1.25	M10x1.25	M10x1.25	M12x1.25	M12x1.25	M16x1.5	M16x1.5
M	16	16	19	19	22	22	27	27
S	14	14	17	17	19	19	22	22
T	5	5	6.5	6.5	6.5	6.5	8	8
Weight gr.	46	46	76	76	110	110	220	220

Fork

Ordering code	
Ø20-Ø25:	**1200.20.04**
Ø32-Ø40:	**1320.32.13F**
Ø50-Ø63:	**1320.40.13F**
Ø80-Ø100:	**1320.50.13F**

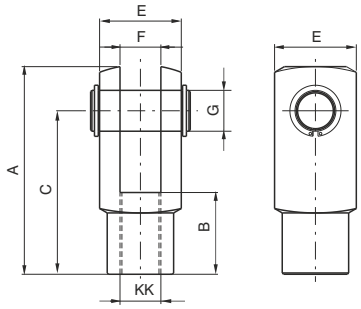

Bore	Ø20	Ø25	Ø32	Ø40	Ø50	Ø63	Ø80	Ø100
A	42	42	52	52	62	62	83	83
B	16	16	20	20	24	24	32	32
C	32	32	40	40	48	48	64	64
E	16	16	20	20	24	24	32	32
F (B12)	8	8	10	10	12	12	16	16
G	8	8	10	10	12	12	16	16
KK	M8x1.25	M8x1.25	M10x1.25	M10x1.25	M12x1.25	M12x1.25	M16x1.5	M16x1.5
Weight gr.	45	45	100	100	140	140	340	340

Fork with clips

Ordering code	
Ø20-Ø25:	**1200.20.04/1**
Ø32-Ø40:	**1320.32.13/1F**
Ø50-Ø63:	**1320.40.13/1F**
Ø80-Ø100:	**1320.50.13/1F**

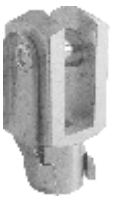

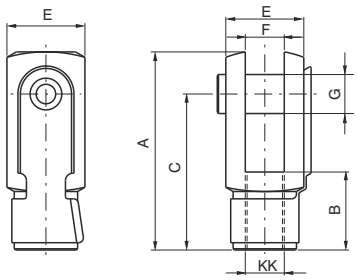

Bore	Ø20	Ø25	Ø32	Ø40	Ø50	Ø63	Ø80	Ø100
A	42	42	52	52	62	62	83	83
B	16	16	20	20	24	24	32	32
C	32	32	40	40	48	48	64	64
E	16	16	20	20	24	24	32	32
F (B12)	8	8	10	10	12	12	16	16
G	8	8	10	10	12	12	16	16
KK	M8x1.25	M8x1.25	M10x1.25	M10x1.25	M12x1.25	M12x1.25	M16x1.5	M16x1.5
Weight gr.	45	45	100	100	140	140	340	340

Self-aligning joint

Ordering code	
Ø20-Ø25:	**1200.20.33F**
Ø32-Ø40:	**1320.32.33F**
Ø50-Ø63:	**1320.40.33F**
Ø80-Ø100:	**1320.50.33F**

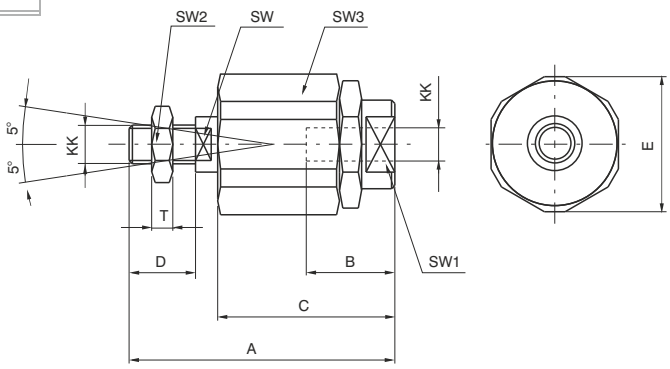

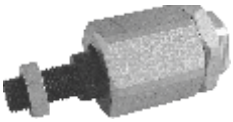

Bore	Ø20	Ø25	Ø32	Ø40	Ø50	Ø63	Ø80	Ø100
A	57	57	71	71	75	75	103	103
B	20	20	20	20	20	20	32	32
C	33	33	46	46	46	46	63	63
D	20	20	20	20	24	24	32	32
E	19	19	32	32	32	32	45	45
KK	M8x1.25	M8x1.25	M10x1.25	M10x1.25	M12x1.25	M12x1.25	M16x1.5	M16x1.5
SW	7	7	12	12	12	12	20	20
SW1	11	11	19	19	19	19	27	27
SW2	13	13	17	17	19	19	24	24
SW3	17	17	30	30	30	30	41	41
T	5	5	6	6	7	7	8	8
Weight gr.	60	60	220	220	230	230	660	660

Valves direct mounting nut

Ordering code
1500.20.F

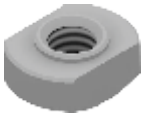

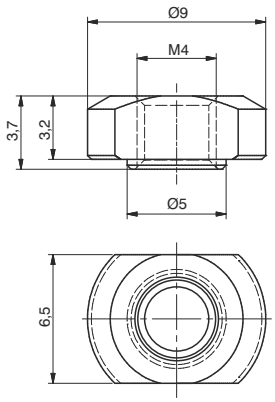

Flange (MF2)

Ordering code
Ø20-Ø25: **1540.Ø.03F** Ø32-Ø100: **1380.Ø.03F**

The kit comprises:
n°1 flange (plated zinc steel)
n°4 screws (plated zinc steel)

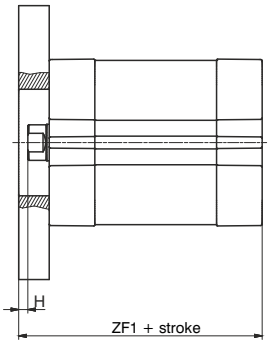

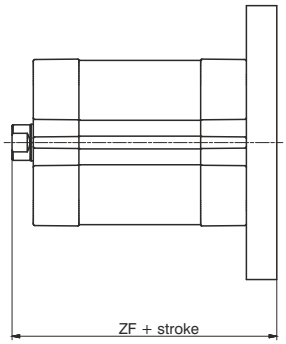

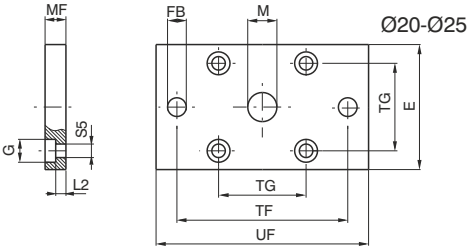

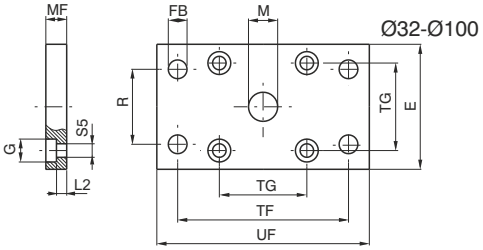

Bore	Ø20	Ø25	Ø32	Ø40	Ø50	Ø63	Ø80	Ø100
E	35	40	45	52	65	75	95	115
FB (H 13)	6.6	6.6	7	9	9	9	12	14
G	9.5	9.5	10.5	10.5	15	15	18	18
M (H 11)	16	16	30	35	40	45	45	55
MF (JS 14)	8	8	10	10	12	12	16	16
R (JS 14)	/	/	32	36	45	50	63	75
TF (JS 14)	55	60	64	72	90	100	126	150
TG	22	26	32.5	38	46.5	56.5	72	89
UF	70	75	80	90	110	120	150	170
ZF	51	53	130	145	155	170	190	205
ZF1	45	47	54	55	57	61	70	83
H	2	2	3	3	4	4	6	6
L2	3	3	5	5	6.5	6.5	8	8
S5	5.5	5.5	6.6	6.6	9	9	11	11
Weight gr.	125	160	190	250	480	620	1430	1990

Foot (MS1)

Ordering code
1540.Ø.05/1F

The kit comprises:
n°1 foot (plated zinc steel)
n°2 screws (plated zinc steel)

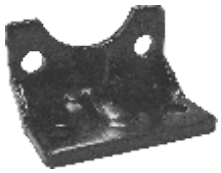

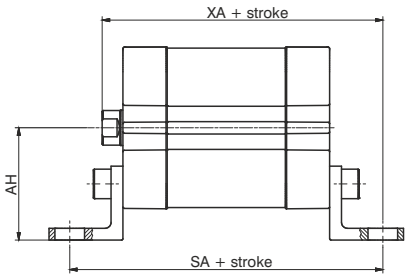

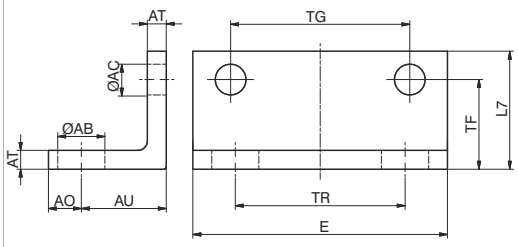

Bore	Ø20	Ø25	Ø32	Ø40	Ø50	Ø63	Ø80	Ø100
AB (H 14)	7	7	7	10	10	10	12	14.5
AC	5.5	5.5	6.5	6.5	8.5	8.5	10.5	10.5
AH	27	29	33.5	38	45	50	63	74
AO (max)	7	7	7	7	9	9	11	13
AT (±0.5)	4	4	4	4	5	5	6	6
AU (±0.2)	16	16	16	18	21	21	26	27
E (max)	35.5	39.5	46.5	54	65	77	95	115
L7	20	20	25	25	30	30	40	45
TF (±0.1)	16	16	17.25	19	21.75	21.75	27	29.5
TG (±0.2)	22	26	32.5	38	46.5	56.5	72	89
TR (JS 14)	22	26	32	36	45	50	63	75
SA	69	71	76	81	87	91	106	121
XA	59	61	67	70	74	78	90	104
Weight gr.	40	45	60	70	130	160	300	405

Rear female clevis (MP2)

Ordering code	
Aluminium:	**1380.Ø.09F**
Steel:	**1320.Ø.20F**

The kit comprises:
n°1 clevis (steel or painted aluminium)
n°4 screws (plated zinc steel)
n°1 pin (plated zinc steel)
n°2 circlips (steel)

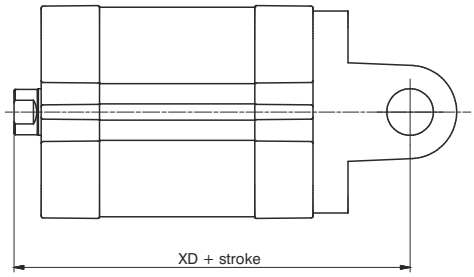

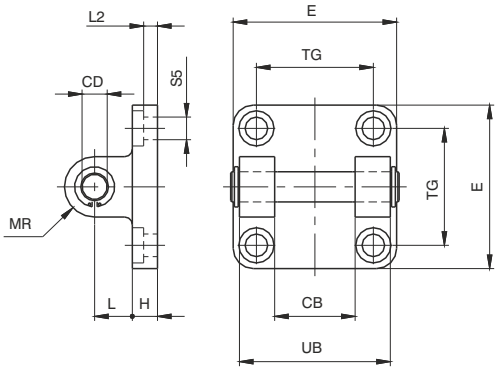

Bore		Ø32	Ø40	Ø50	Ø63	Ø80	Ø100
CB (H 14)		26	28	32	40	50	60
CD		10	12	12	16	16	20
E	Aluminium	45	52	65	75	95	115
	Steel	45	55	65	75	95	115
H	Aluminium	9	9	11	11	14	14
	Steel	10	10	10	12	14	16
L	Aluminium	13	16	16	21	22	27
	Steel	12	15	17	20	22	25
MR		10	12	12	16	16	20
TG		32.5	38	46.5	56.5	72	89
UB (h14)		45	52	60	70	90	110
XD		73	77	80	83	100	118
L2(±0.5)		5.5	5,5	6.5	6.5	10	10
S5		6.6	6.6	9	9	11	11
Weight	Aluminium	80	130	185	310	530	910
gr.	Steel	180	290	400	670	1160	2000

Narrow rear female trunnion (AB6)

Ordering code	
Aluminium:	**1380.Ø.30F**
Steel:	**1320.Ø.29F**

The kit comprises:
n°1 clevis (plated zinc steel or painted)
n°4 screws (plated zinc steel)
n°1 pin (plated zinc steel) complete with elastic pin and ring

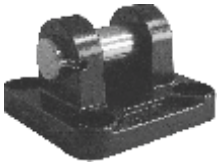

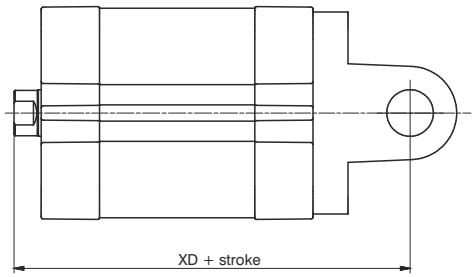

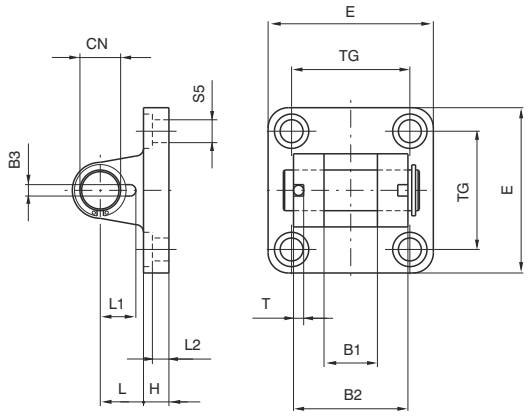

Bore		Ø32	Ø40	Ø50	Ø63	Ø80	Ø100
B1 (H 14)		14	16	21	21	25	25
B2 (d 12)		34	40	45	51	65	75
B3 ($^{+0.2}_{-0}$)		3.3	4.3	4.3	4.3	4.3	6.3
CN		10	12	16	16	20	20
E	Aluminium	45	52	65	75	95	115
	Steel	45	55	65	75	95	115
H	Aluminium	9	9	11	11	14	14
	Steel	10	10	10	12	14	16
L	Aluminium	13	16	16	21	22	27
	Steel	12	15	17	20	22	25
L1		11.5	12	14	14	16	16
L2 (±0.5)		5,5	5.5	6.5	6.5	10	10
S5		6,6	6.6	9	9	11	11
T		3	4	4	4	4	4
TG		32.5	38	46.5	56.5	72	89
XD		73	77	80	89	100	118
Weight	Aluminium	70	115	200	290	570	820
gr.	Steel	160	270	370	670	1110	2100

Rear male clevis (MP4)

Ordering code		
Aluminium:	Ø20-Ø25:	**1580.Ø.09/1F**
	Ø32-Ø100:	**1380.Ø.09/1F**
Steel:	Ø20-Ø25:	**1580.Ø.09/2F**
	Ø32-Ø100:	**1320.Ø.21F**

The kit comprises:
n°1 clevis (steel or painted aluminium)
n°4 screws (plated zinc steel)
n°1 pin (plated zinc steel) *
n°2 circlips (steel)

*(from Ø32)

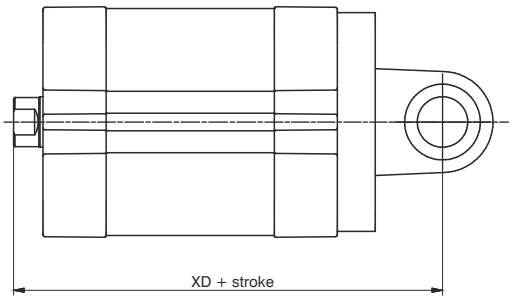

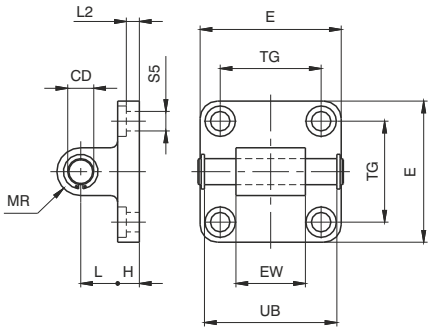

Bore		Ø20	Ø25	Ø32	Ø40	Ø50	Ø63	Ø80	Ø100
CD		8(H9)	8(H9)	10	12	12	16	16	20
E	Aluminium	34	38	45	52	65	75	95	115
	Steel	34	38	45	55	65	75	95	115
EW		16(h14)	16(h14)	26($^{-0,2}_{-0,6}$)	28($^{-0,2}_{-0,6}$)	32($^{-0,2}_{-0,6}$)	40($^{-0,2}_{-0,6}$)	50($^{-0,2}_{-0,6}$)	60($^{-0,2}_{-0,6}$)
H	Aluminium	6	6	9	9	11	11	14	14
	Steel	/	/	10	10	10	12	14	16
L	Aluminium	14	14	13	16	16	21	22	27
	Steel	/	/	12	15	17	20	22	25
MR		8	8	10	12	12	16	16	20
TG		22	26	32,5	38	46,5	56,5	72	89
UB ($^{-0,5}_{-0}$)		/	/	46	53	61	71	91	111
XD		63	65	73	77	80	89	100	118
L2 (±0.5)		2,6	2,6	5,5	5,5	6,5	6,5	10	10
S5		5,5	5,5	6,6	6,6	9	9	11	11
Weight	Aluminium	25	28	90	130	190	340	580	960
gr.	Steel	70	80	210	330	430	810	1350	2400

Rear male clevis (with jointed head MP6)

Ordering code	
Aluminium:	**1380.Ø.15F**
Steel:	**1320.Ø.25F**

The kit comprises:
n°1 clevis (steel or painted aluminium)
n°4 screws (plated zinc steel)

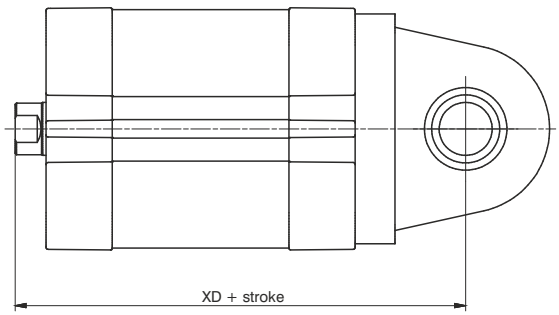

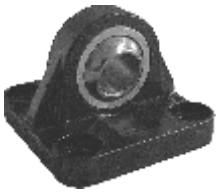

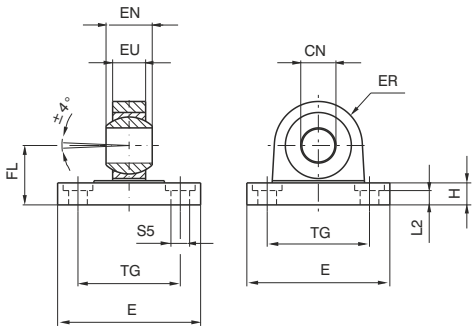

Bore		Ø32	Ø40	Ø50	Ø63	Ø80	Ø100
CN (H 7)		10	12	16	16	20	20
E	Aluminium	45	52	65	75	95	115
	Steel	45	55	65	75	95	115
EN (-0.1)		14	16	21	21	25	25
ER	Aluminium	16	19	21	24	28.5	30
	Steel	15	18	20	23	27	30
EU		10.5	12	15	15	18	18
FL (JS 15)		22	25	27	32	36	41
H	Aluminium	9	9	11	11	14	14
	Steel	10	10	10	12	14	16
L2 (±0.5)		5.5	5.5	6.5	6.5	10	10
S5		6.6	6.6	9	9	11	11
TG		32.5	38	46.5	56.5	72	89
XD		73	77	80	89	100	118
Weight	Aluminium	60	100	180	245	480	650
gr.	Steel	210	310	400	710	1350	2400

Square angle trunnion (AB7)

Ordering code	The kit comprises:
Aluminium: **1380.Ø.35F** Steel: **1320.Ø.23F**	n°1 clevis (steel or painted aluminium) n°1 counter clevis, square (steel or painted aluminium) n°4 screws (plated zinc steel) n°1 pin (plated zinc steel) n°2 circlips (steel)

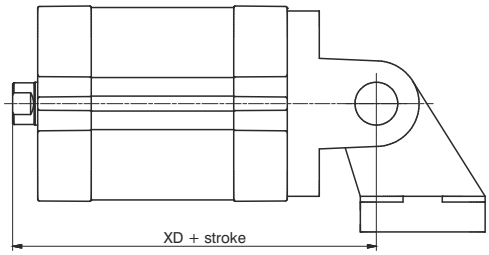

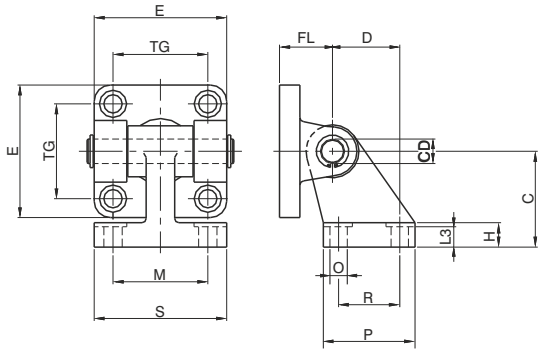

Bore		Ø32	Ø40	Ø50	Ø63	Ø80	Ø100
E	Aluminium	45	52	65	75	95	115
	Steel	45	55	65	75	95	115
TG		32.5	38	46.5	56.5	72	89
FL		22	25	27	32	36	41
D (JS14)		21	24	33	37	47	55
CD		10	12	12	16	16	20
C (JS15)		32	36	45	50	63	71
H	Aluminium	8	10	12	14	14	17
	Steel	8	10	12	12	14	15
L3	Aluminium	6.4	8.4	10.4	12.4	11.5	14.5
	Steel	6.5	8.5	10.5	10.5	11.5	12.5
R (JS14)		18	22	30	35	40	50
P		31	35	45	50	60	70
O (H13)		6.6	6.6	9	9	11	11
S		51	54	65	67	86	96
M (JS14)		38	41	50	52	66	76
XD		73	77	80	89	100	118
Weight gr.	Aluminium	120	180	225	435	730	1220
	Steel	340	500	640	1250	2100	3500

Square angle trunnion (with joined head)

Ordering code	The kit comprises:
Steel: **1320.Ø.27F**	n°1 clevis (painted steel) n°1 counter clevis square with joined head (painted steel) n°4 screws (plated zinc steel) n°1 pin (plated zinc steel) n°2 circlips (steel)

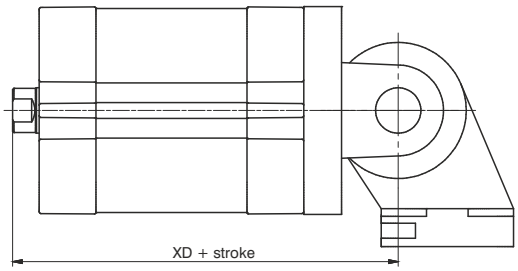

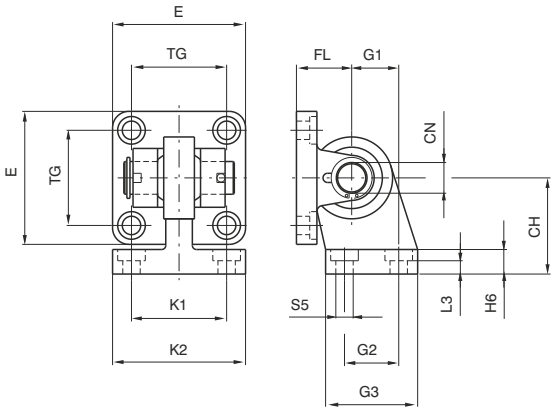

Bore	Ø32	Ø40	Ø50	Ø63	Ø80	Ø100
CH (JS 15)	32	36	45	50	63	71
CN	10	12	16	16	20	20
E	45	55	65	75	95	115
FL (JS 15)	22	25	27	32	36	41
G1 (JS 15)	21	24	33	37	47	55
G2 (JS 14)	18	22	30	35	40	50
G3	31	35	45	50	60	70
H6	10	10	12	12	14	15
K1 (JS 14)	38	41	50	52	66	76
K2	51	54	65	67	86	96
L3 ($^{+0.5}_{0}$)	8.5	8.5	10.5	10.5	11.5	12.5
S5	6.6	6.6	9	9	11	11
TG	32.5	38	46.5	56.5	72	89
XD	73	77	80	89	100	118
Weight gr.	330	480	830	1220	2100	3580

Square angle trunnion (not specified by ISO-VDMA standard)

Ordering code	The kit comprises:
Aluminium: **1380.Ø.11F**	n°1 clevis (painted aluminium) n°1 counter clevis square (painted aluminium) n°4 screws (plated zinc steel) n°1 pin (plated zinc steel) n°2 circlips (steel)

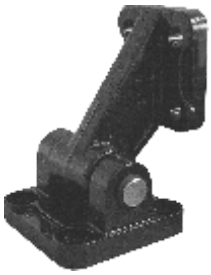

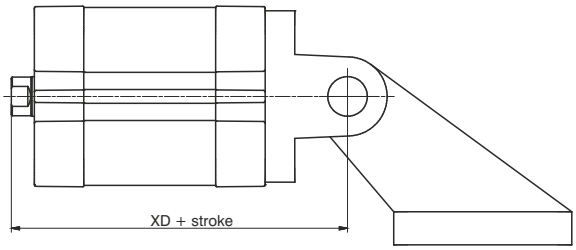

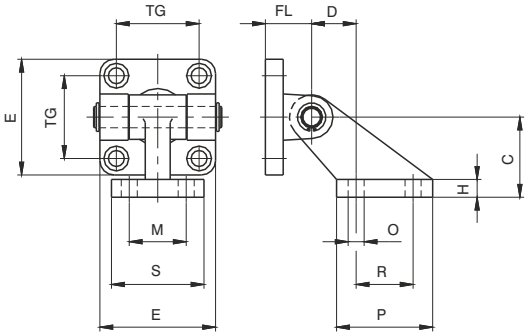

Bore	Ø32	Ø40	Ø50	Ø63	Ø80	Ø100
C (±0.2)	32	45	45	63	63	90
D (±0.5)	18	25	25	32	32	40
E	45	52	65	75	95	115
H	8	10	10	12	12	17
FL	22	25	27	32	36	41
M (JS 14)	25	32	32	40	40	50
TG	32.5	38	46.5	56.5	72	89
O (H 13)	7	9	9	11	11	14
P	37	54	54	75	75	103
R (JS 14)	20	32	32	50	50	70
S	41	52	52	63	63	80
XD	73	77	80	89	100	118
Weight gr.	130	260	330	600	820	1560

Square angle trunnion (with joined head)

Ordering code	The kit comprises :
Aluminium: **1380.Ø.36F** Steel: **1320.Ø.26F**	n°1 clevis (steel or painted aluminium) n°1 counter clevis with joined head (steel or painted aluminium) n°4 screws (plated zinc steel) n°1 pin (plated zinc steel) complete with elastic pin and ring

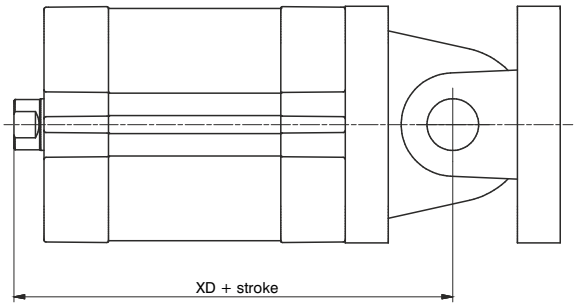

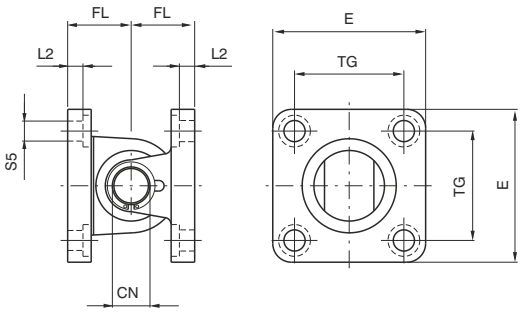

Bore		Ø32	Ø40	Ø50	Ø63	Ø80	Ø100
CN		10	12	16	16	20	20
E	Aluminium	45	52	65	75	95	115
	Steel	45	55	65	75	95	115
FL (JS 15)		22	25	27	32	36	41
L2 (±0.5)		5.5	5.5	6.5	6.5	10	10
S5		6.6	6.6	9	9	11	11
TG		32.5	38	46.5	56.5	72	89
XD		73	77	80	89	100	118
Weight gr.	Aluminium	130	215	380	535	1050	1470
	Steel	380	580	770	1380	2460	4500

Standard trunnion (not specified by ISO-VDMA standard)

Ordering code	The kit comprises:
Aluminium: **1380.Ø.10F**	n°1 clevis (painted aluminium) n°1 counter clevis (painted aluminium) n°4 screws (plated zinc steel) n°1 pin (plated zinc steel) n°2 circlips (steel)

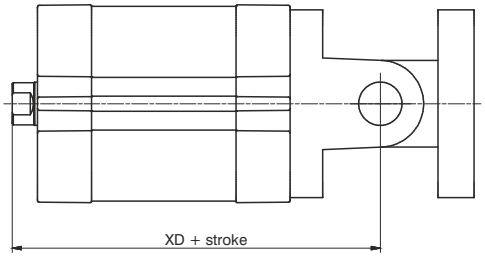

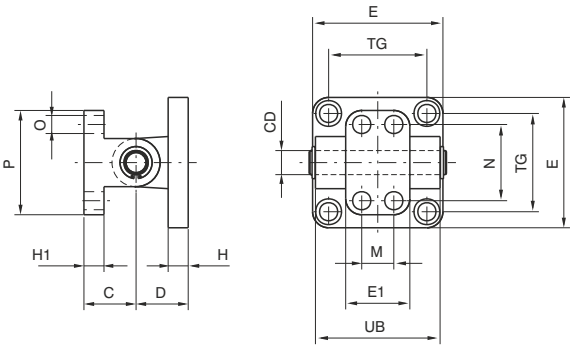

Bore	Ø32	Ø40	Ø50	Ø63	Ø80	Ø100
C (±0.2)	18	26	26	34	34	41
CD	10	12	12	16	16	20
D	22	25	27	32	36	41
E	45	52	65	75	95	115
E1	25	32	32	46	46	56
H	10	10	12	12	16	16
H1	8	10	10	12	12	16
M (±0.2)	-	16	16	25	25	32
N (±0.2)	28	38	38	54	54	90
O	7	9	9	11	11	14
P	40	52	52	75	75	115
TG	32.5	38	46.5	56.5	72	89
UB	45	52	60	70	90	110
XD	73	77	80	89	100	118
Weight gr.	110	190	240	490	710	1290

Complete standard trunnion

Ordering code	The kit comprises:
Steel: **1320.Ø.22F**	n°1 clevis (painted steel) n°1 counter clevis (painted steel) n°4 screws (plated zinc steel) n°1 pin (plated zinc steel) n°2 circlips (steel)

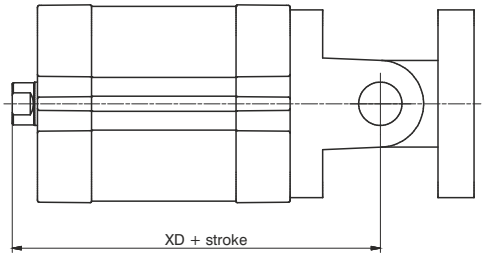

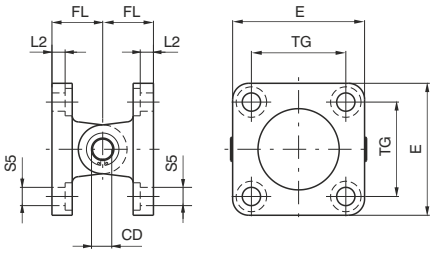

Bore	Ø32	Ø40	Ø50	Ø63	Ø80	Ø100
CD	10	12	12	16	16	20
E	45	55	65	75	95	115
FL	22	25	27	32	36	41
L2 (±0.5)	5.5	5.5	6.5	6,5	10	10
S5	6.6	6.6	9	9	11	11
TG	32.5	38	46.5	56.5	72	89
XD	73	77	80	89	100	118
Weight gr.	360	580	780	1370	2370	4110

Alternative fixing options

Frontal mounting:
- from Ø20 to Ø40 bolt head
- the use of non-magnetic screws is recommended

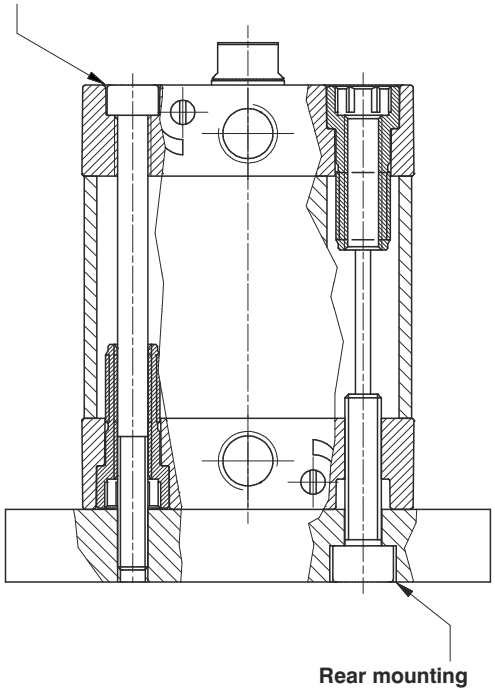

Admissible maximum radial load diagram

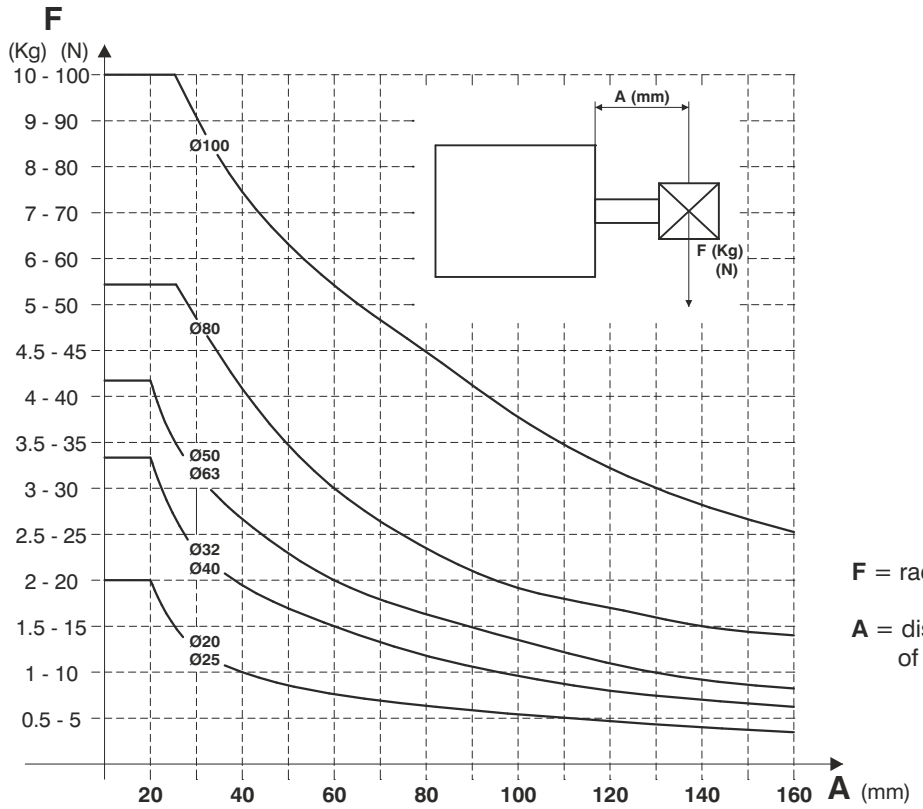

F = radial load (Kg and N)

A = distance between the load (F) centre of gravity and the cylinder front end cap

The diagram shows the maximum Radial load F (in Newtons) that can be applied to the cylinder piston rod as a function of the distance **A** (in mm); based upon the standard version cylinder under static conditions

End of stroke cushioning capacity diagram

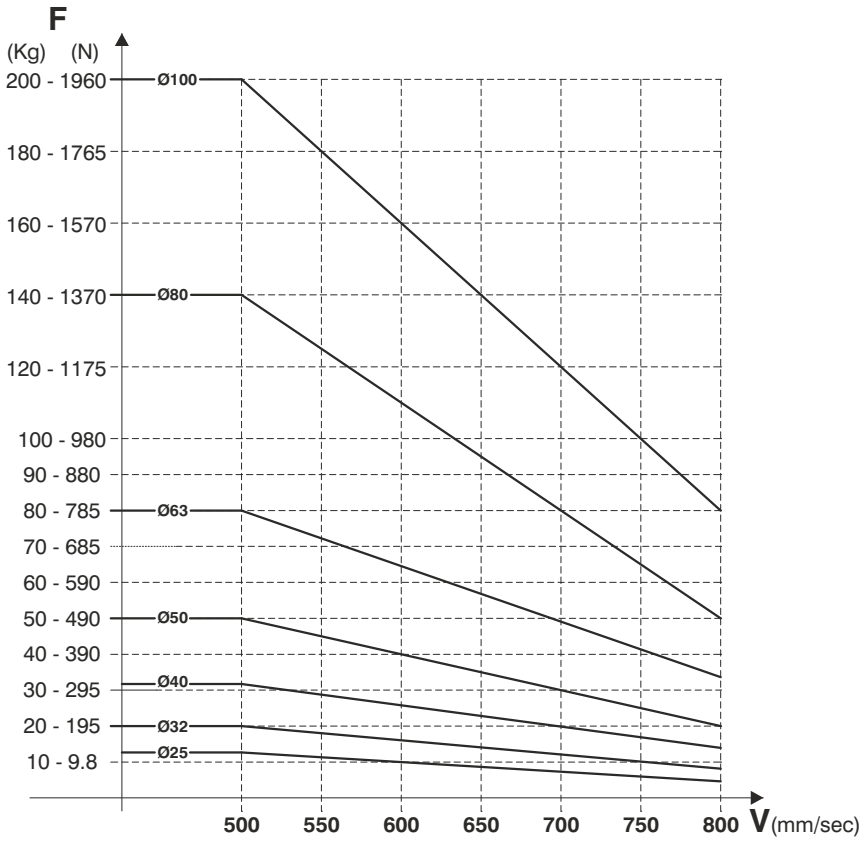

F= moved cylinder load (Kg and N)

V= load speed

The diagram shows, for each diameter, the safety curves relative to the maximum loads which can be moved by the cylinder in function of it's speed **V**. The data has been calculated under the following test conditions: Cylinder mounted vertically with the rod pointing down, air pressure at 5 bar and with a guided load.
Important: Do not exceed the recommended values in the table as reduced life or damage to the cylinder may result.

4

General

Based on the **ECOMPACT** series with piston rods and centring diameters according to ISO 15552 standard

Construction characteristics

Body	anodised aluminium
End caps	aluminium alloy casting painted with brass centring bearing
Bearing piston rod	spheroid bronze on steel band with P.T.F.E. coat
Piston rod	C43 chromed steel (on request stainless steel)
Piston	Ø32 and Ø40 acetal resin (aluminium on request) Ø50 and Ø63 aluminium (with FPM seals, aluminium for all of standard diameters)
Seals	standard: NBR oil resistant rubber, PUR piston rod seals (PUR or FPM on request)
Spring	stainless steel
Fixing screws	plated zinc steel

Technical characteristics

Fluid	filtered and preferably lubricated air, or non-lubricated (if air is lubricated, the lubrication must be constant)
Max. pressure	10 bar
Operating temperature	-5°C - +70°C with standard seals (magnetic or non magnetic piston) -30°C - +80°C with PUR seals (magnetic or non magnetic piston) -5°C - +80°C with FPM seals (magnetic piston) -5°C - +150°C with FPM seals (non magnetic piston)

Please follow the suggestions below to ensure a long life for these cylinders:
- use clean and lubricated air
- correct alignment during assembly with regard to the applied load so as to avoid radial components or bending the rod.
- avoid high speeds together with long strokes and heavy loads: this would produce kinetic energy which the cylinder cannot absorb, especially if used as a limit stop (in this case use mechanical stop device and aluminium piston)
- evaluate the environmental characteristics of cylinder used (high temperature, hard atmosphere, dust, humidity etc.)

Please note: air must be dried for applications with lower temperature.
Use hydraulic oils H class (ISO VG32) for correct continued lubrication.
Our Technical Department will be glad to help.

Stroke tolerance, minimum and maximum spring loads and cushioning length

Bore	Stroke tolerance	Minimum and maximum spring load		Cushioning length
(mm)	(mm)	(N)		(mm)
		min.	max.	
Ø32	+2 / 0 mm	19,6	25,5	6,5
Ø40		25,5	42,2	8
Ø50		44,1	96,3	7,5
Ø63	+2,5 / 0 mm	44,1	96,3	7,5

Standard stroke

DOUBLE ACTING
BASIC and PUSH/PULL ROD version

Bore	Stroke																										
	5	10	15	20	25	30	35	40	45	50	55	60	65	70	75	80	100	125	150	160	200	250	300	320	350	400	450	500
WITHOUT CUSHIONING DEVICE																												
Ø32	●	●	●	●	●	●	●	●	●	●	●	●	●	●	●	●	●	●	●	●	●	●	●					
Ø40	●	●	●	●	●	●	●	●	●	●	●	●	●	●	●	●	●	●	●	●	●	●	●					
Ø50	●	●	●	●	●	●	●	●	●	●	●	●	●	●	●	●	●	●	●	●	●	●	●	●	●	●		
Ø63	●	●	●	●	●	●	●	●	●	●	●	●	●	●	●	●	●	●	●	●	●	●	●	●	●	●		
WITH CUSHIONING DEVICE																												
Ø32					●	●	●	●	●	●	●	●	●	●	●	●	●	●	●	●	●	●	●					
Ø40					●	●	●	●	●	●	●	●	●	●	●	●	●	●	●	●	●	●	●					
Ø50					●	●	●	●	●	●	●	●	●	●	●	●	●	●	●	●	●	●	●	●	●	●		
Ø63					●	●	●	●	●	●	●	●	●	●	●	●	●	●	●	●	●	●	●	●	●	●		

DOUBLE ACTING
PUSH/PULL ROD
BORED version

Bore	Stroke																											
	5	10	15	20	25	30	35	40	45	50	55	60	65	70	75	80	25	30	35	40	45	50	55	60	65	70	75	80
	WITHOUT CUSHIONING DEVICE																**WITH CUSHIONING DEVICE**											
Ø32	●	●	●	●	●	●	●	●	●	●							●	●	●	●	●	●						
Ø40	●	●	●	●	●	●	●	●	●	●							●	●	●	●	●	●						
Ø50	●	●	●	●	●	●	●	●	●	●	●	●	●	●	●		●	●	●	●	●	●	●	●	●	●	●	
Ø63	●	●	●	●	●	●	●	●	●	●	●	●	●	●	●		●	●	●	●	●	●	●	●	●	●	●	

Available versions

BASIC version

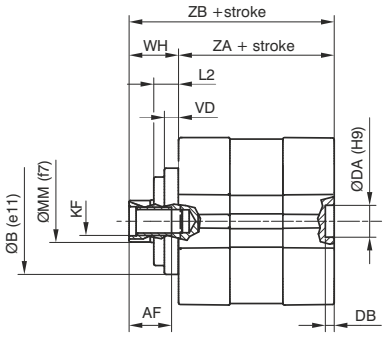

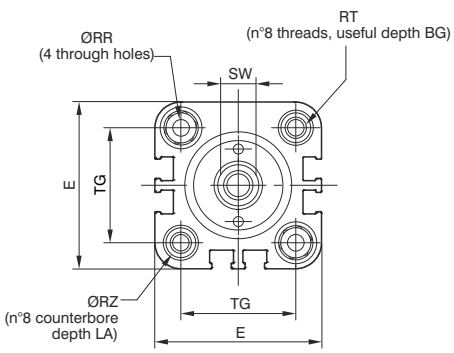

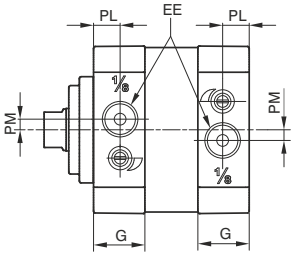

Sensor slot detail
type "B"
(n° 6 slots)

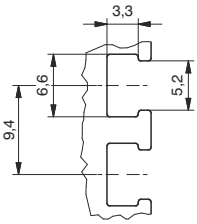

PUSH/PULL rod version

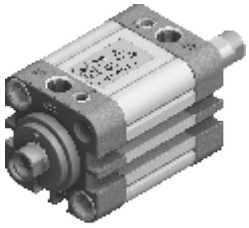

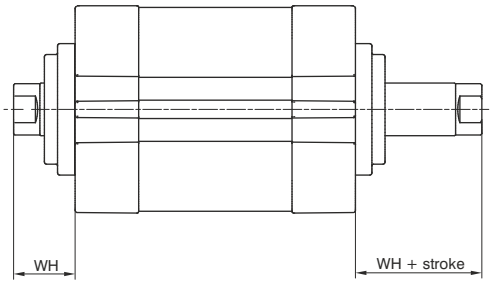

Ordering codes

15 _ _.Ø.stroke. _ _ . _

- **0**=NBR seals and C43 chromed plated rod
- **1**=NBR seals and stainless steel rod
- **4**=PUR seals and C43 chromed plated rod
- **5**=PUR seals and stainless steel rod
- **6**=FPM seals and C43 chromed plated rod
- **7**=FPM seals and stainless steel rod

- **4**= Non-cushioned version (mechanical cushioning only)
- **5**= Versions with adjustable end of stroke cushioning system

**
- **10**= Basic, female threaded rod
- **11**= Basic, male threaded rod
- **12**= through rod, female threaded rod
- **13**= through rod, male threaded rod
- **14**= through rod, bored female threaded rod
- **15**= through rod, bored male threaded rod

- **1**= Double acting, magnetic piston
- **4**= Double acting, non magnetic piston

** It is possible to order the Ø32 and Ø40 cylinders with an aluminium piston by replacing the '1' with '2' in the ordering code.
Example: 1540.32.10.10.1 (Acetyl Resin Piston)
1540.32.10.20.1 (Aluminium Piston version)

Seals compounds scheme
NBR: oil resistant nitrilic rubber seals
PUR: polyurethane seals
FPM: fluoropolymer rubber seals

Table of dimensions

Bore		Ø32	Ø40	Ø50	Ø63
AF (min)		12	16	20	20
ØB (e11)		30	35	40	45
BG		16	16	16	16
ØDA (H9)		9	9	12	12
DB (+0,1/0)		2,5	2,5	2,6	2,6
E (max)		47,5	55	66	78
EE		G1/8"	G1/8"	G1/8"	G1/8"
G		14,5	15	15	15
KF		M8	M10	M12	M12
LA (0/-0,1)		5	5	5	5
L2		7	7	10	10
ØMM (f 7)		12	16	20	20
PL (+0,1/0)		7,5	8	8	8
PM		3	/	/	/
ØRR (min)		5,1	5,1	6,6	6,6
RT		M6	M6	M8	M8
ØRZ (min)		8,5	8,5	10,5	10,5
SW (0/-0,1)		10	13	17	17
TG (±0,2)		32,5	38	46,5	56,5
VD		4	4	5	5
WH (±1)		14	14	18	18
ZA (±0,5)		44	45	45	49
ZB (+1/0)		58	59	63	67
Weight	stroke	240	330	530	700
gr.	every 5mm	13	17	24	27

Basic version male piston rod

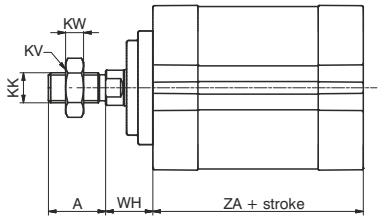

Push/pull version male rod

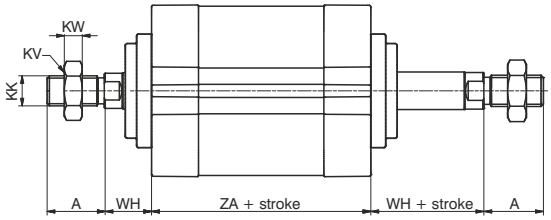

Push - pull version bored female piston rod

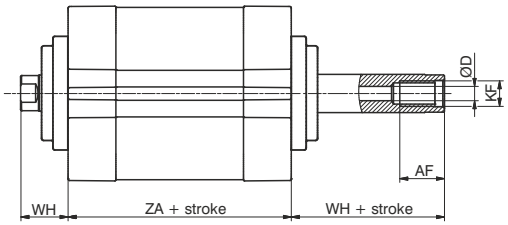

Push - pull version bored male piston rod

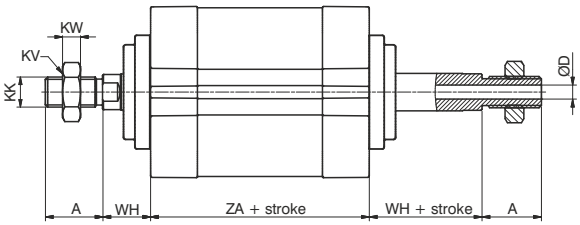

Bore	A (0/-0,5)	AF (min)	ØD	KF	KK	KV	KW	WH (±1)	ZA (±0,5)
Ø32	22	14	4,5	M8	M10x1,25	17	6	14	44
Ø40	24	18	4,5	M10	M12x1,25	19	7	14	45
Ø50	32	24	6	M12	M16x1,5	24	8	18	45
Ø63	32	24	6	M12	M16x1,5	24	8	18	49

Sensor and piston rod accessories

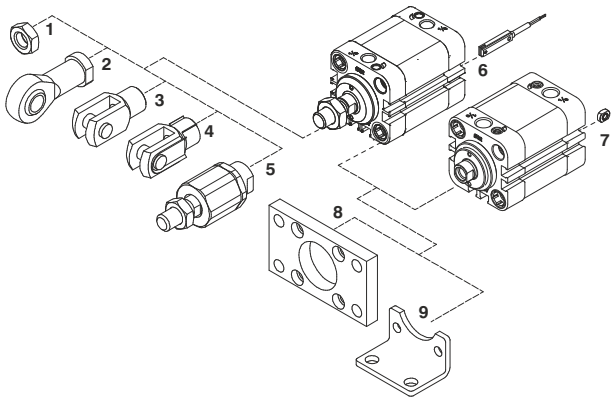

Pos.	Description	Ordering code	
1	Rod lock nut	**1320.32.18F** **1320.40.18F** **1320.50.18F**	(Ø32) (Ø40) (Ø50-Ø63)
2	Ball joint	**1320.32.32F** **1320.40.32F** **1320.50.32F**	(Ø32) (Ø40) (Ø50-Ø63)
3	Fork	**1320.32.13F** **1320.40.13F** **1320.50.13F**	(Ø32) (Ø40) (Ø50-Ø63)
4	Fork with clips	**1320.32.13/1F** **1320.40.13/1F** **1320.50.13/1F**	(Ø32) (Ø40) (Ø50-Ø63)
5	Self aligning joint	**1320.32.33F** **1320.40.33F** **1320.50.33F**	(Ø32) (Ø40) (Ø50-Ø63)
6	Sensors	(See chapter 6 magnetic sensor)	
7	Valves direct mounting bolt	**1500.20F**	(Ø32 - Ø63)

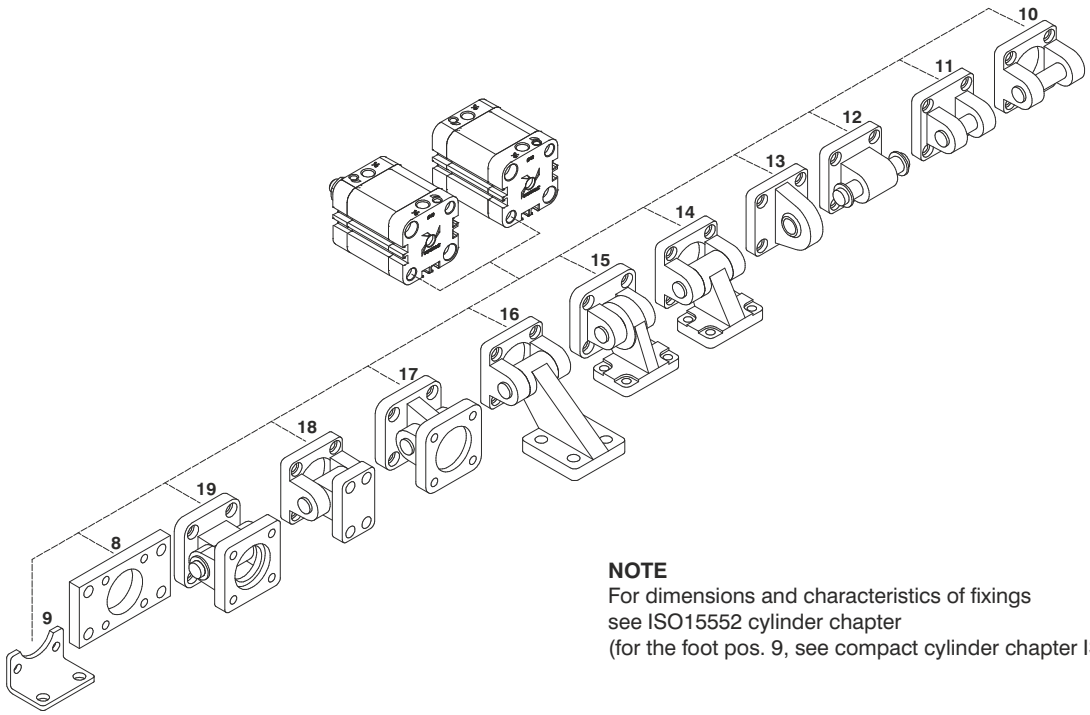

NOTE
For dimensions and characteristics of fixings
see ISO15552 cylinder chapter
(for the foot pos. 9, see compact cylinder chapter ISO 21287).

Fixing

Pos.	Description	Ordering code	
		Aluminium	Steel
8	Flange (MF2)	**1390.Ø.03FP**	**1380.Ø.03F**
9	Foot (MS1)	/	**1540.Ø.05/1F**
10	Rear female clevis (MP2)	**1380.Ø.09F**	**1320.Ø.20F**
11	Narrow rear female clevis (AB6)	**1380.Ø.30F**	**1320.Ø.29F**
12	Rear male clevis (MP4)	**1380.Ø.09/1F**	**1320.Ø.21F**
13	Rear male clevis (with jointed head - MP6)	**1380.Ø.15F**	**1320.Ø.25F**
14	Square angle trunnion (Ab7)	**1380.Ø.35F**	**1320.Ø.23F**
15	Square angle trunnion (with jointed head)	/	**1320.Ø.27F**
16	Square angle trunnion (not specified by ISO 15552)	**1380.Ø.11F**	/
17	Standard trunnion (with jointed head)	**1380.Ø.36F**	**1320.Ø.26F**
18	Standard trunnion (not specified by ISO 15552)	**1380.Ø.10F**	/
19	Complete standard trunnion	**1380.Ø.22F**	**1320.Ø.22F**

Admissible maximum radial load diagram

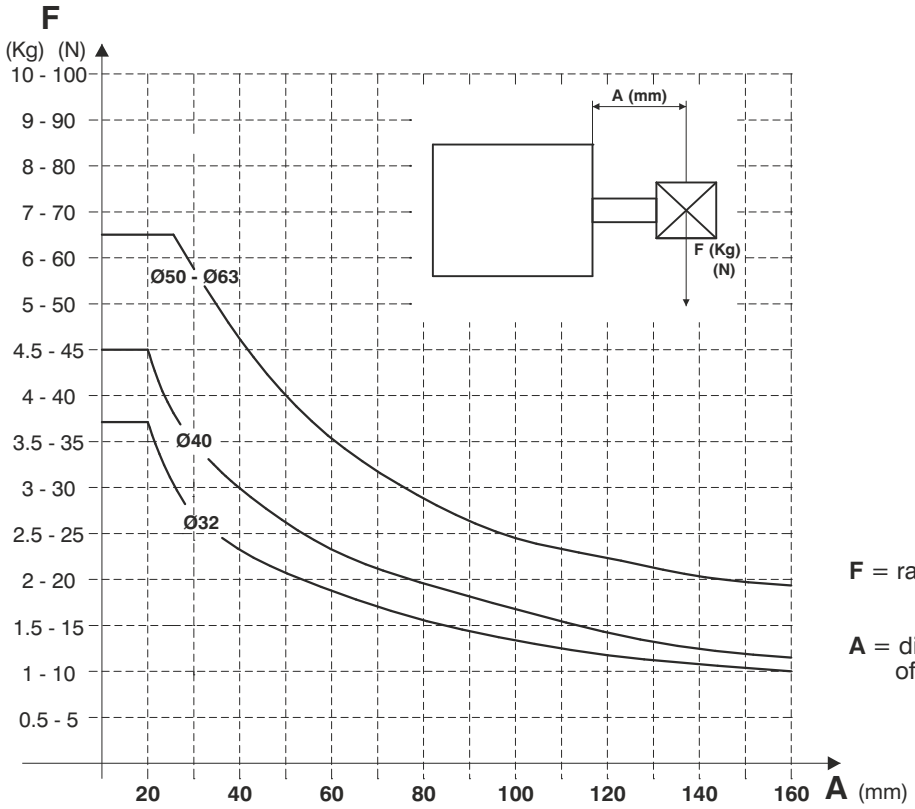

F = radial load (Kg and N)

A = distance between the load (F) centre of gravity and the cylinder front end cap

The diagram shows the maximum radial load F (in Newtons) that can be applied to the cylinder piston rod as a function of the distance **A** (in mm), under static conditions

4

End of stroke cushioning capacity diagram

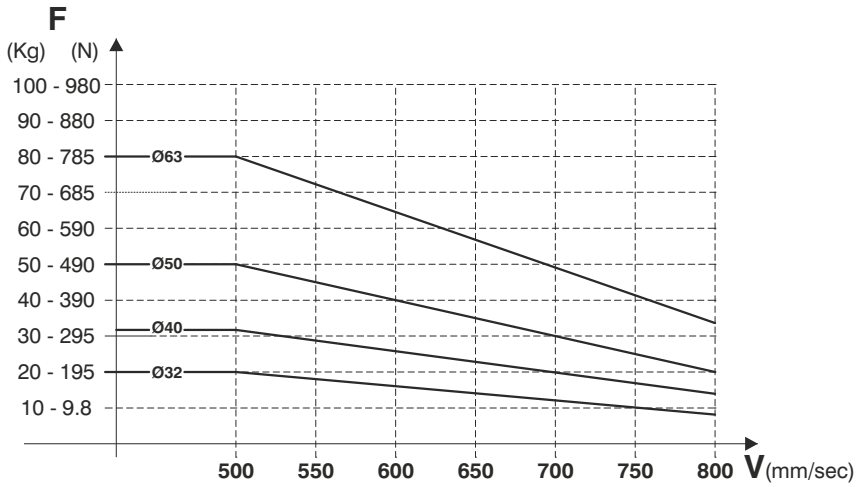

F= moved cylinder load (Kg and N)

V= load speed

The diagram shows, for each diameter, the safety curves relative to the maximum loads which can be moved by the cylinder in function of it's speed **V**. The data has been calculated under the following test conditions:
Cylinder mounted vertically with the rod pointing down, air pressure at 5 bar and with a guided load.
Important: Do not exceed the recommended values in the table as reduced life or damage to the cylinder may result.

General

The purpose of producing a rodless cylinder is to provide a space saving option over conventional cylinders. On a traditional rod type cylinder, the total space occupied with rod out is more than double the length of the cylinder, while with rodless cylinder it is little more than its stroke. Profiled tube allows mounting of sensors 1500._, RS._, HS._ and 1580._, MRS._, MHS._ on the two sides of carriage, by means of suitable brackets. Standard accessories include foot mounting brackets for installation on cylinder and caps, intermediate mounting brackets to give support to long stroke cylinders under load (over one metre), an oscillating coupling device for installation between the mounting plate and the load and on request, a very precise external movement device.

Construction characteristics

End covers	anodised aluminium
Barrel	anodised aluminium
Bands	tempered stainless steel
Mounting place	anodised aluminium
Piston	acetal resin
Guide blocks	acetal resin
Cushion bearings	aluminium
Piston seals	special 80 shore nitril mixture, wear resistant
Other seals	NBR oil-resistant rubber

Technical characteristics

Fluid	filtered and lubricated air
Pressure	0.5 - 8 bar
Working temperature	-5°C - +70°C
Max. speed	1.5 m/sec. (normal working conditions)
Bores	Ø 25 - 32 - 40 - 50 - 63
Max. strokes	6 m

4

Please follow the suggestions below to ensure a long life for these cylinders:
- use clean and lubricated air
- Please adequately evaluate the load involved and its direction, especially in respect to the moving carriage (also see tables for loads and admitted moments).
- avoid high speeds together with long strokes and heavy loads: this would produce kinetic energy which the cylinder cannot absorb, especially if used as a limit stop (in this case use mechanical stop device)
- evaluate the environmental characteristics of cylinder used (high temperature, hard atmosphere, dust, humidity etc.)

Please note: air must be dried for applications with lower temperature.
Use hydraulic oils H class (ISO Vg32) for correct continued lubrication.
Our Technical Department will be glad to help.

For applications where a low smooth uniform operations speed is required, you must specify this on your purchase order so that we can use the proper special grease.

Use and maintenance

This type of cylinder, due to its characteristics, has to be used within certain criteria. Correct use will give long and troublefree operation. Filtered and lubricated compressed air reduce seal wear. Verify that the load will not produce unforeseen stresses. Never combine high speed with heavy load. Always support the long stroke cylinder with intermediate brackets and never exceed the specified working conditions.
If maintenance is required, follow the instructions supplied with the repair kit.

Basic version

Ordering code
1605.Ø.stroke.01.M (Max. stroke 6 mt.)

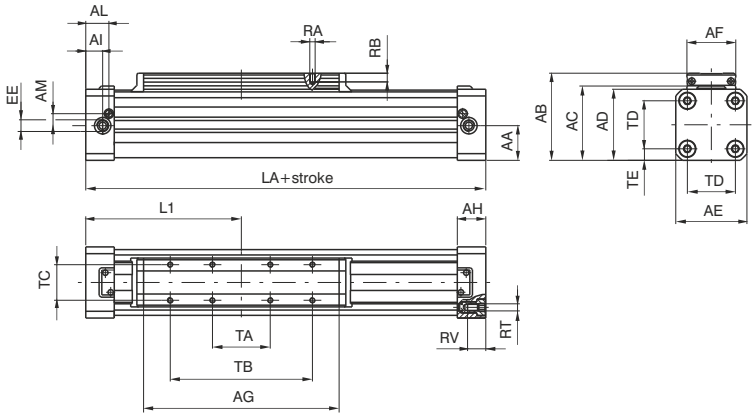

Left head

Ordering code
1605.Ø.stroke.02.M (Max. stroke 6 mt.)

Possibility of a single feed cylinder head

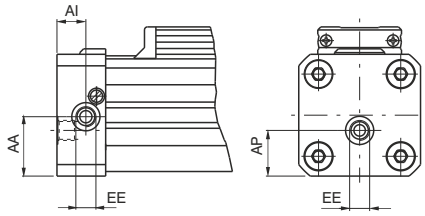

Right head

Ordering code
1605.Ø.stroke.03.M (Max. stroke 6 mt.)

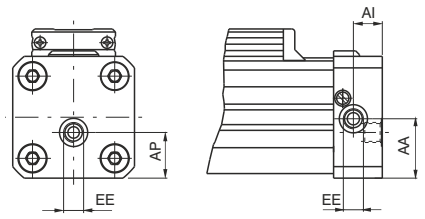

Bore		25	32	40	50	63
AA		19,5	25,5	31	39	46,5
AB		56	70	80	98	113,5
AC		48,5	60	70	85	100
AD		44	55	65	80	95
AE		40	55	65	80	95
AF		30	40	40	55	55
AG		117	146	186	220	255
AH		23	27	30	32	36
AI		12,5	14,5	17,5	19	23
AL		19	22,5	24,5	26	30
AM		7,5	10,5	11,5	13,5	16
AP		13	15,2	23	30	35,5
EE		G1/8"	G1/4"	G1/4"	G1/4"	G3/8"
L1		100	125	150	175	215
LA		200	250	300	350	430
RA		M4	M5	M5	M6	M6
RB		7,5	9,5	9,5	11,5	11,5
RT		M5	M6	M6	M8	M8
RV		13,5	16,5	16,5	20,5	20,5
TA		30	40	40	65	65
TB		80	110	110	160	160
TC		23	30	30	40	40
TD		27	36	47	54	68
TE		6,5	9,5	9	13	13,5
Weight	stroke 0	900	1650	2650	4330	8010
gr.	every 100mm	225	340	490	725	1070
STROKE TOLERANCE: + 2 mm.						

4

Basic version cylinder

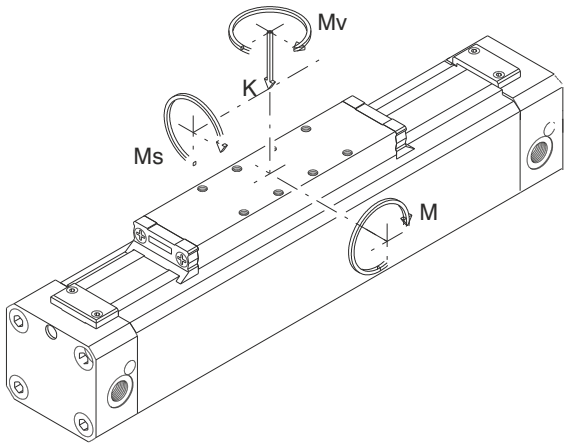

Operating end stroke decelerator diagram

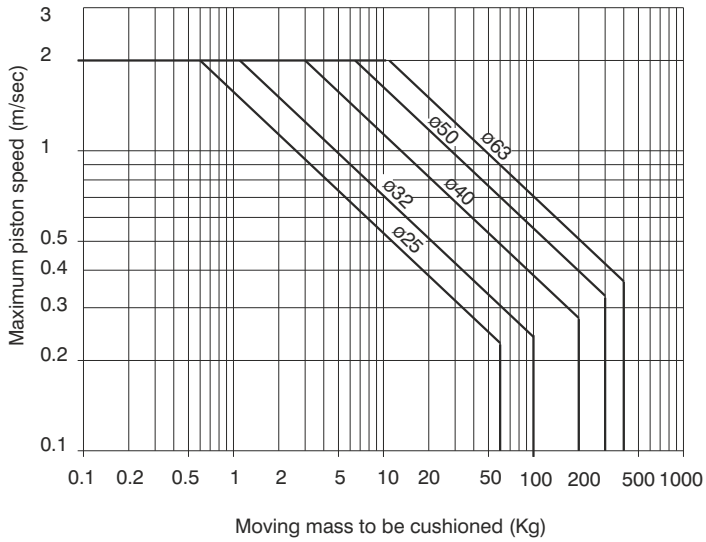

Recommended loads and moments in static conditions

CYLINDER BORE	DECELERATING STROKE (mm)	MAX. RECOMMENDED LOAD K (N)	MAX. RECOMMENDED BENDING MOMENT M (Nm)	MAX. RECOMMENDED CROSS MOMENT Ms (Nm)	MAX. RECOMMENDED TWISTING MOMENT Mv (Nm)
25	20	300	15	0.8	3
32	25	450	30	2.5	5
40	31	750	60	4.5	8
50	38	1200	115	7.5	15
63	49	1600	150	8.5	24

4

Attention: use guided carriage for heavier loads or precise linear movements (MG or MH versions).

All reported data are referred to carriage plane and indicates MAX - values in statical conditions. These values should not be exceeded either in dynamic conditions (best speed <1m/sec). Should the cylinder be utilised at its maximum performances, ensure the proper additional absorbers are used.

Calculation of permissible load (Kd) in dynamic conditions $Kd = K \cdot Cv$

Coefficient of velocity diagram

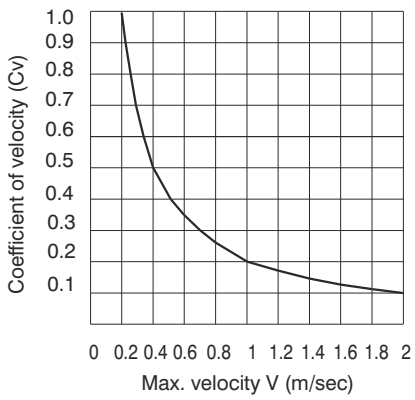

Loads under combined stressing conditions

It is important to take into consideration the following formula when there are a combination of forces with torque:

$$\left[\left(2 \times \frac{Ms}{Ms\ max}\right) + \left(1.5 \times \frac{Mv}{Mv\ max}\right) + \frac{M}{M\ max} + \frac{K}{K\ max}\right] \times \frac{100}{Cv} \leq 100$$

Cylinder with linear control unit
(Ø 25, Ø32, Ø40 and Ø50)

Ordering code
1605.Ø.stroke.01.MG (Max. stroke 3mt.)

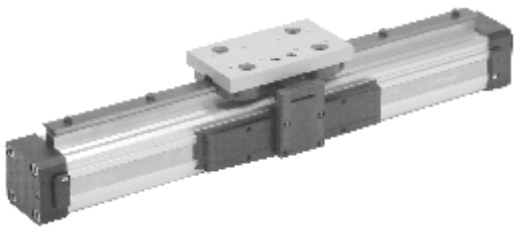

Cylinders Ø 25

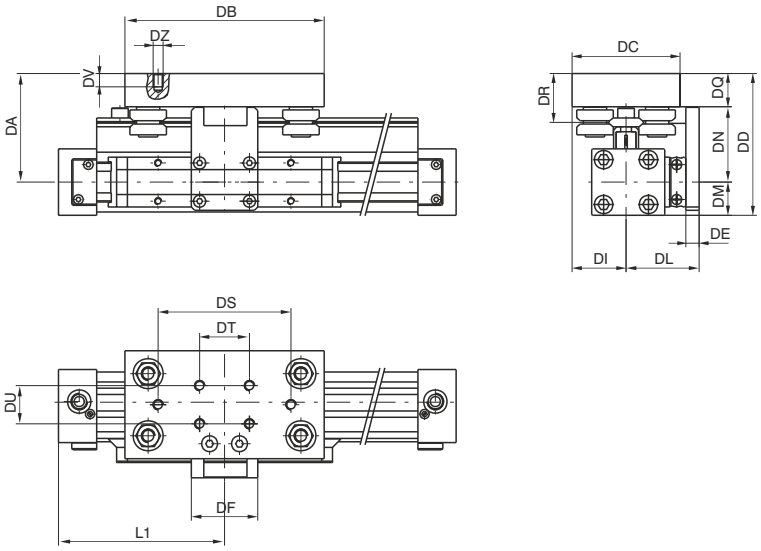

Cylinders Ø 32, Ø 40, Ø 50

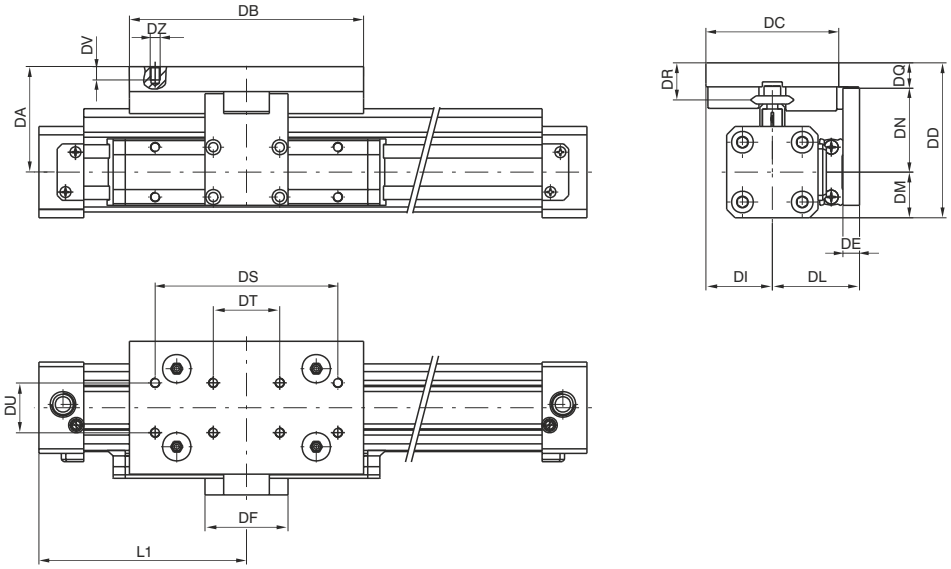

Bore	DA	DB	DC	DD	DE	DF	DI	DL	DM	DN	DQ	DR	DS	DT	DU	DV	DZ	L1	Weight guide	every 100mm
25	65	120	65	85	8	40	32,5	44	20	45,5	19,5	29	80	30	23	8	M6	100	gr. 850	gr. 90
32	63	141	80	90,5	10	50	40	52,5	27,5	48,5	14,5	21,5	110	40	30	8	M5	125	gr. 950	gr. 90
40	68,5	141	80	101	10	50	40	57,5	32,5	54	14,5	21,5	110	40	30	8	M5	150	gr. 950	gr. 90
50	76	141	80	116	12	80	40	70	40	61,5	14,5	21,5	110	40	30	8	M5	175	gr. 950	gr. 90

For cylinder weight refer to base version

Construction characteristics of linear control unit

Rod	carbon steel with hardness higher than 55-60 HRC
Bearing with shaft	shielded bearing with shaped ring
Carriage plate	anodised aluminium
Cover	acetal resin

Cylinders with linear control unit Ø32, Ø40 and Ø50

Max. suggested loads and moments

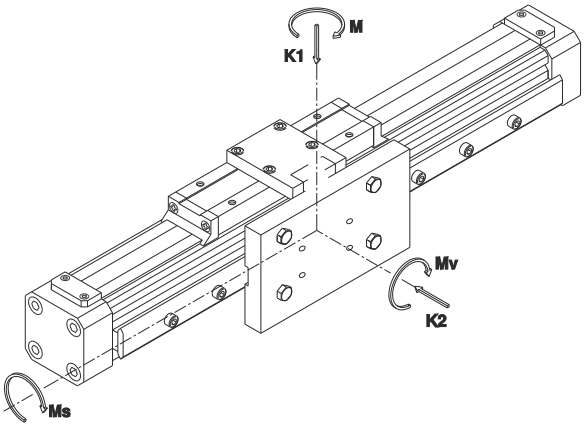

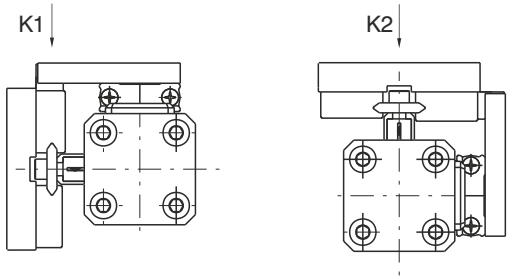

K1 (N)	K2 (N)	M (Nm)	Ms (Nm)	Mv (Nm)
960	960	40	12	40

Max. load (K1 o K2) depending on the distance LC between the supports

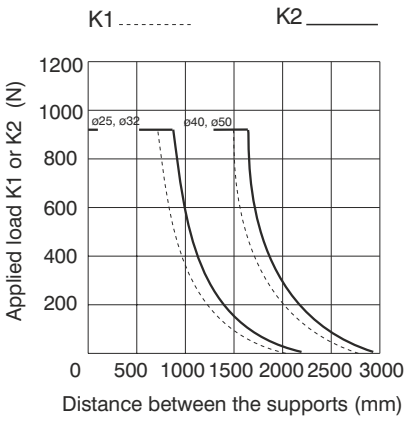

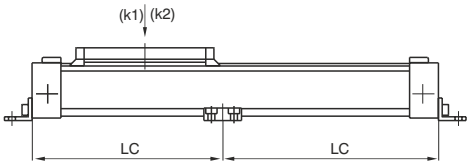

Real load (CE) under combined stressing conditions

It is important to take into consideration the following formula when there are a combination of forces with torque :

$$CE = \left[K1 + K2 + (24 \times M) + (80 \times Ms) + (24 \times Mv)\right] \leq 960$$

Nomograph load / life

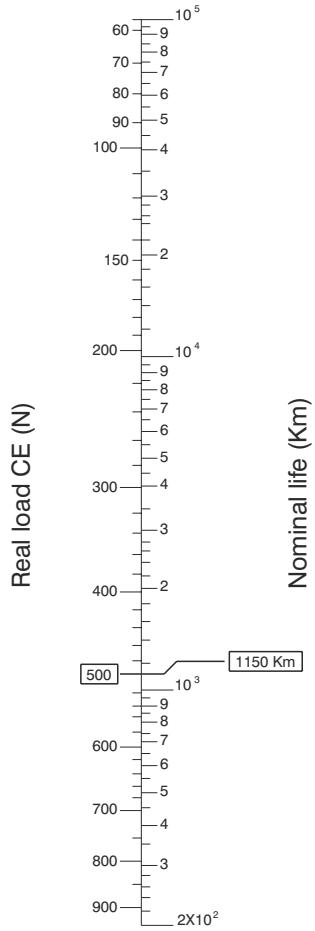

All data refers to a linear control unit properly lubricated with linear speed < di 1.5 m/s

Example to compute the life

Compute the linear control unit life with a load of 100 N applied 50 mm off its axle.

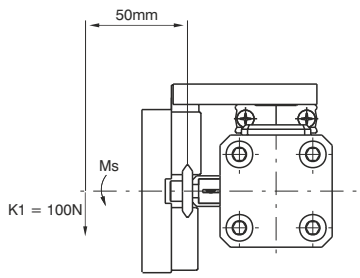

Ms = 0,05 x 100 = 5 Nm K1 = 100 N

How to compute the real load using the formula:

$$CE = \left[K1 + K2 + (24 \times M) + (80 \times Ms) + (24 \times Mv)\right]$$

$$\mathbf{CE = \left[100 + 0 + (24 \times 0) + (80 \times 5) + (24 \times 0)\right] = 500N}$$

After having verified that the CE is lower than 960 N we realise that the life is 1150 Km from the nomograph.

Cylinder with sliding shoes guide
(Ø 25, Ø 32, Ø 40, Ø 50 and Ø 63)

Ordering code
1605.Ø.stroke.01.MH

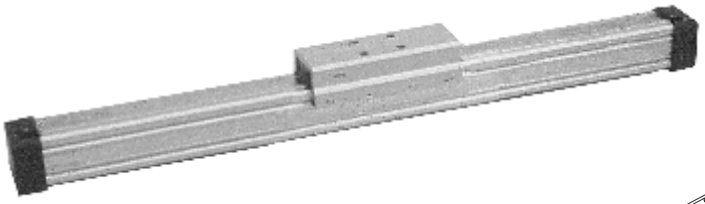

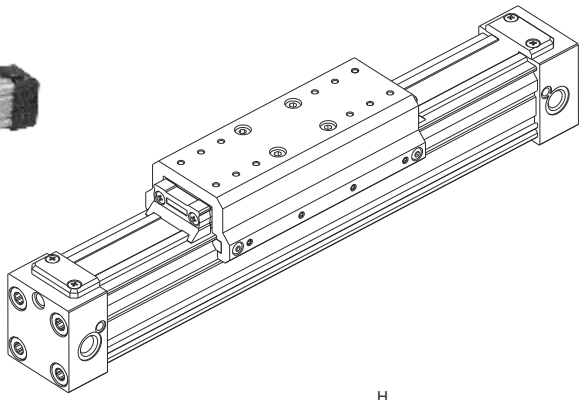

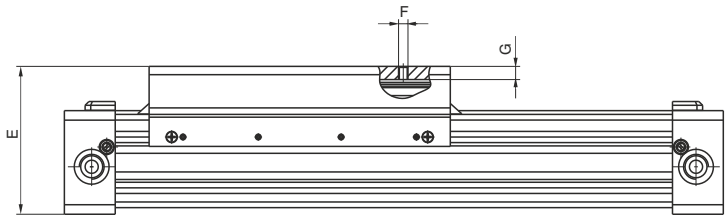

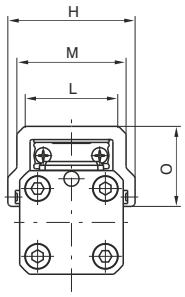

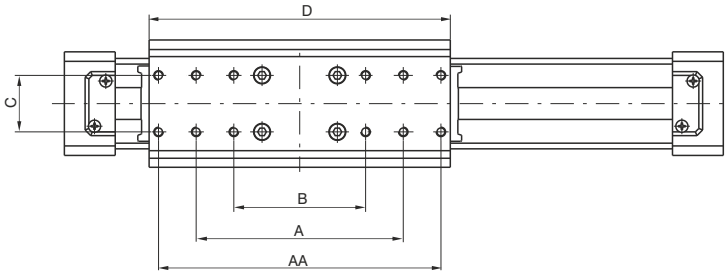

Bore	AA	A	B	C	D	E	F	G	H	L	M	O	Weight gr.
Ø25	/	80	55	23	130	$64^{\pm1}$	M4	6,5	57	36	42	32	gr. 235
Ø32	/	110	70	30	160	$78,5^{\pm1}$	M5	7	68	50	58	42,5	gr. 445
Ø40	/	110	70	30	202	$88,5^{\pm1}$	M5	7	77	52	60	45,5	gr. 595
Ø50	210	160	110	40	235	$114,5^{\pm1}$	M6	14	100	71	83	61,5	gr. 1453
Ø63	210	160	110	40	270	$130^{\pm1}$	M6	14	116	76	90	65,5	gr. 1810

For cylinders weight refer to base version

Complete sliding shoes guide

Ordering code
1600.Ø.05F

Construction characteristics of guide

Sliding shoes guide	reinforced carbon fibre nylon
Mounting plate	extruded anodised aluminium

Cylinder with sliding shoes guide ø25, ø32, ø40, ø50 and ø63

Max. suggested loads and moments

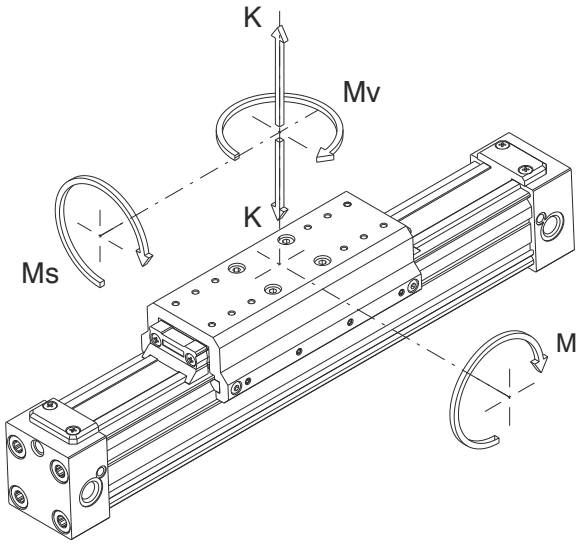

Recommended loads and moments in static conditions

CYLIDER BORE	MAX RECOMMENDED LOAD K (N)	MAX RECOMMENDED BENDING MOMENT M (Nm)	MAX RECOMMENDED CROSS MOMENT Ms (Nm)	MAX RECOMMENDED CROSS MOMENT Ms (Nm)
ø 25	300	20	1	4
ø 32	450	35	3	6
ø 40	750	70	5	9
ø 50	1200	120	8	16
ø 63	1600	155	9	25

Sensor brackets codes 1600._, SRS._, SHS._

Ordering code
1600.A

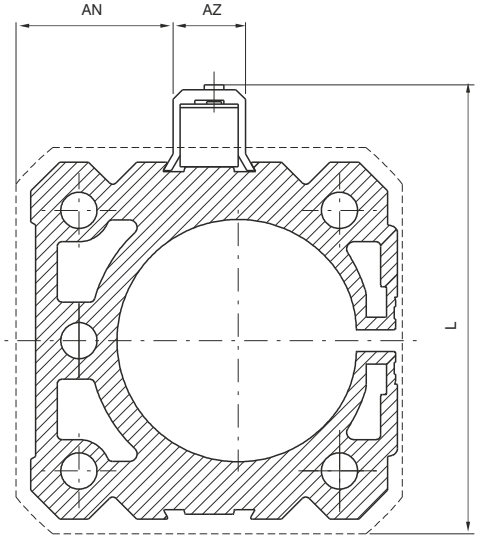

Bore		25	32	40	50	63
AN		12,5	20	25	32,5	40
AZ		15	15	15	15	15
L		55	68	79	94	110
LB		45	58	69	84	100
Weight gr.	1600.A	3	3	3	3	3
	1600.B	1	1	1	1	1

Sensor brackets codes 1580._, MRS._, MHS._

Ordering code
1600.B

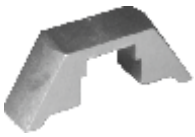

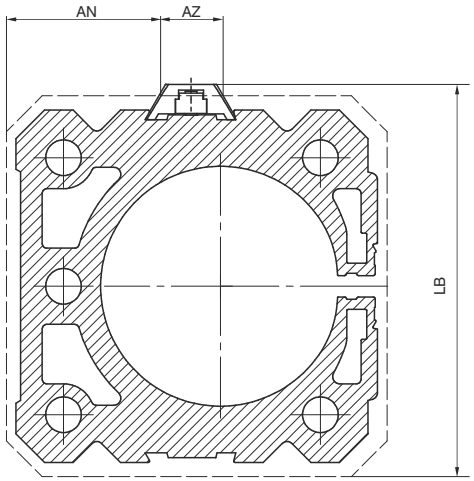

Sensors

For technical characteristics and ordering codes see Chapter 6 (magnetic sensors)

Instruction on how to use the sensors properly

Particular attention must be paid not to exceed the working limits listed in the tables and that the sensor is never connected to the mains without a load connected in series; these are the only measures that if not observed can put the circuits out of order. In the case of direct current (D.C.) connection polarities must be respected, that is the brown wire to the positive load (+) and the blue to the negative (-). If these are inverted the sensor remains switched, the load connected and the led turned off. However, this would not damage the circuit.
For the "U" type sensors attention must be paid that the length of the cable doesn't exceed 8 metres, with tension above 100 V. In this case a serial resistance is added to reduce the cumulative effects of the line.
As an example 1000 W per 100-130 V e 2000 W per 200-240 V.

Mounting foot brackets

Ordering code
1600.Ø.01F (1 piece)

Bore
25 - 32

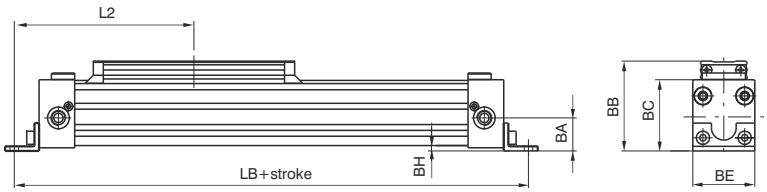

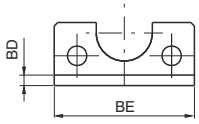

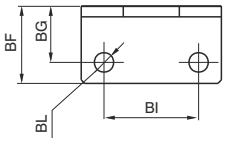

Bore	25	32	40	50	63
BA	21,5	28	32,5	41	49
BB	58	72,5	81,5	100	116
BC	46	57,5	66,5	82	97,5
BD	3	3	20	25	30
BE	40	55	65	80	95
BF	22	25	25	25	30
BG	16	18	12,5	12,5	15
BH	3,5	6	4,5	5	5
BI	27	36	30	40	48
BL	5,5	6,6	9	9	11
L2	116	143	162,5	187,5	230
LB	232	286	32,5	375	460
Weight gr.	30	45	65	110	190

Bore
40 - 50 - 63

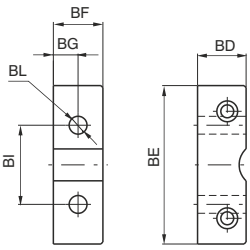

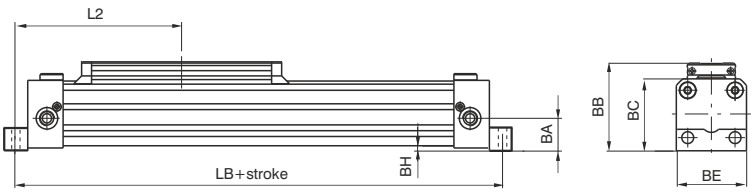

Intermediate support

Ordering code
1600.Ø.02F

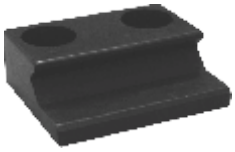

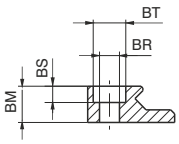

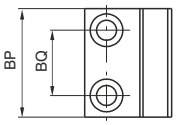

Bore
25 - 32

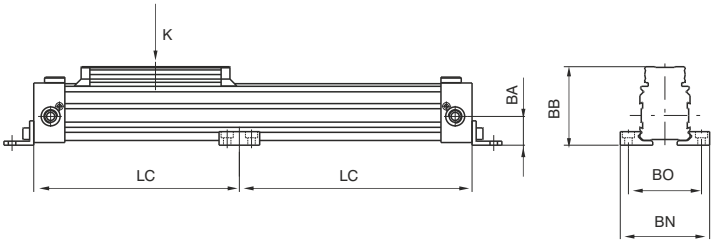

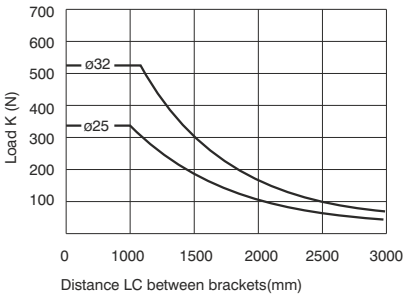

Bore	25	32	40	50	63
BA	21,5	28	32,5	41	49
BB	58	72,5	81,5	100	116
BM	10	18	18	25	30
BN	66	86	96	120	140
BO	54	70	80	100	120
BP	30	40	40	50	50
BQ	18	25	25	32	32
BR	5,5	6,6	6,6	9	9
BS	4,5	5,5	5,5	7,5	7,5
BT	9	11	11	15	15
Weight gr.	25	80	80	160	215

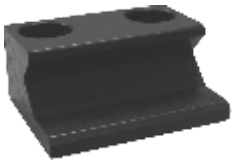

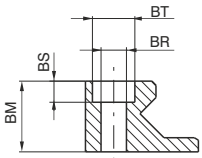

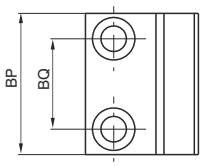

Bore
40 - 50 - 63

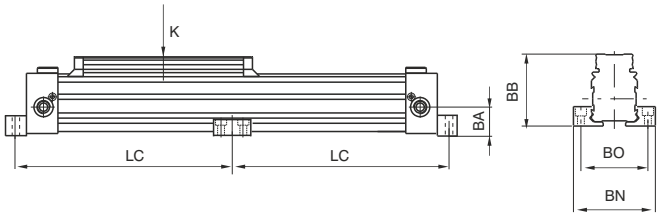

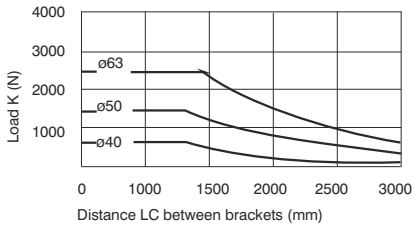

4

Oscillating hinge

Ordering code
1600.Ø.03F

Bore
25 - 32 - 40

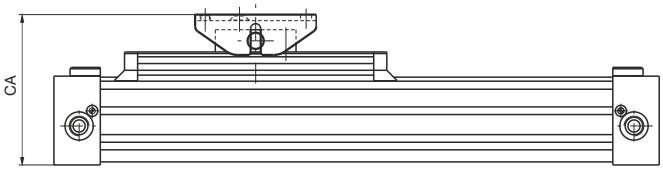

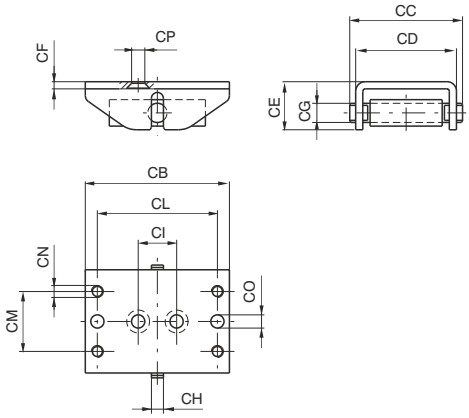

Bore	25	32	40	50	63
CA (±5.5)	76	99.5	108.5	135.5	151
CB	60	100	100	120	120
CC	47	64	64	92	92
CD (±5)	42	56	56	80	80
CE	20	30	30	42	42
CF	3	4	4	6	6
CG	8	12	2	16	16
CH	5	8	8	10	10
CI	16	40	40	65	65
CL	50	80	80	100	100
CM	25	30	30	47	47
CN	M5	M6	M6	M8	M8
CO	5.5	6.5	6.5	9	9
CP	5.5	7	7	-	-
Weight gr.	130	380	380	990	990

Bore
50 - 63

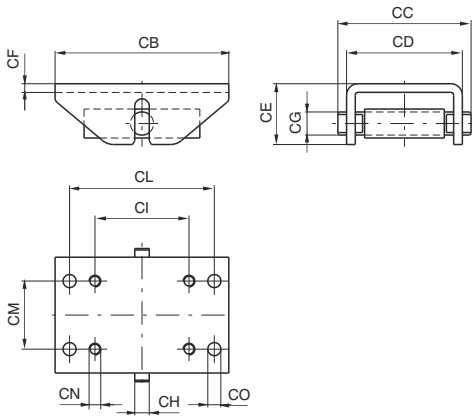

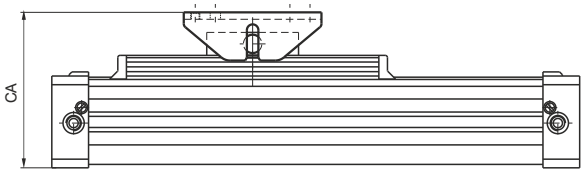

General

The cable cylinders work in a linear translation systems, they are very compact and can be used where a normal cylinder with a rigid rod is too cumbersome. The main characteristic of the cable cylinders is the absence of the rod which, in coming out of the end plate at the end of the stroke, doubles the total overall dimension of the cylinder. In the case of the cable cylinder, the rod is replaced by a metal rilsan-coated cable. It is connected to the piston and coming at the maximum point of stroke never exceeds the overall dimensions of the cylinder.
The cable is connected to the bracket with clamps which serve also to regulate the tension. Because of the construction characteristics of this type of cylinder it must be used with much care. The cable is capable of supporting large stress due to heavy load and high speed. Unfortunately, we cannot give definitive limits of use if not in presence of masses of a few kilograms to be translated (7 - 10 for 16 and 20 - 25 for Ø 25) with speed inversely proportional to the entity of the same load (max 0,5 m/sec). This is done in a way that the load always has a mechanical stop at the end of the stroke. The magnetic piston version lengthens the overall dimensions by 50 mm; the 1200 series microcylinder sensors are used along with the clips of that series.

Construction characteristics

End plates	anodised black aluminium	Piston seals	NBR 80 Shore (at lip)
Barrel	anodised aluminium	Cable seal	PUR
Piston	aluminium	Bracket	steel
Cable	steel	Cable clamps	brass
Cable covering	Rilsan	Pulleys	aluminium with ball bearing

Technical characteristics

Fluid: filtered and lubricating air	Max. pressure:6 bar	Min. and max. temperature: -5°C - +70°C	Max speed: 0.5 m/sec.

"Attention: Dry air must be used for application below 0°C"

	A	B	C	D
Standard	111	132	86	124
Magnetic	161	182	136	174

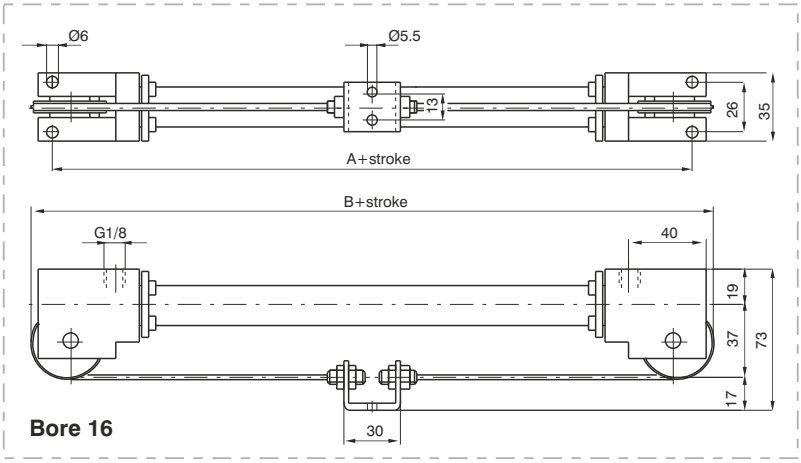

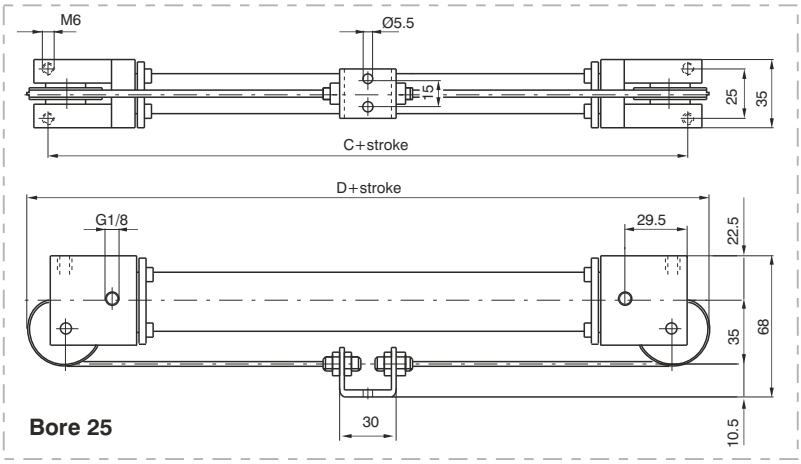

Ordering code
1601.Ø.stroke **1601.Ø.stroke.M** Version with magnetic piston

Maintenance

The cable is obviously the part most subject to breakage. The cylinder can be disassembled for replacement of the cable which is supplied already complete with threaded bushings to be screwed on to the piston. Once the wear of the barrel and seals has been checked, the cylinders can be reassembled by screwing on the end plates. Next, the ends of the cable are attached to the bracket by way of clamps and the tension regulated. The tension is correct when the cable is not cambered.

General

Rodless cylinder based on the stainless steel strip sealing technology widely used and tested on bigger bore sizes.
Available versions: sliding shoe as standard ("MH").
This system ensures high resistance and long life as the carriage which supports the weight is not tied to the piston and therefore the piston only transfers the movement without bearing any force.
Air connections: M5 threaded connections.
All air connections on one end cap version available. (side-back-bottom side)
Mountings:
- Foot brackets and intermediate supports if needed (depending on the stroke)
- Swivel bracket
- Directly in position via the slot on the end caps- in this conditions the air supply can come directly from the mounting plate.

Magnetic sensors: sensors series (1590.... , LRS.... and LHS....) can be used directly in the 2 slots on the barrel.

Construction characteristics

End covers	Anodised aluminium
Barrel	Anodised aluminium
Bands	Stainless steel
External carriage	Anodised aluminium
Sliding bushes	Special technopolymer
Piston	Acetal resin
Cushion bearings	Aluminium
Piston seals	Special NBR
Other seals	NBR

Technical characteristics

Fluid	Filtered and lubricated air
Working pressure	1,5 - 8 bar
Working temperature	-5°C - +70°C
Max. speed	1 m/s (normal working conditions)
Max. stroke	2,5 meters
Cushioning length	18 mm

Please follow the suggestions below to ensure a long life for these cylinders:
- use clean and lubricated air
- Please adequately evaluate the load involved and its direction, especially in respect to the moving carriage (also see tables for loads and admitted moments).
- avoid high speeds together with long strokes and heavy loads: this would produce kinetic energy which the cylinder cannot absorb, especially if used as a limit stop (in this case use mechanical stop device)
- evaluate the environmental characteristics of cylinder used (high temperature, hard atmosphere, dust, humidity etc.)

Please note: air must be dried for applications with lower temperature.
Use hydraulic oils H class (ISO VG32) for correct continued lubrication.
Our Technical Department will be glad to help.

For applications where a low smooth uniform operations speed is required, you must specify this on your purchase order so that we can use the proper special grease.

Use and maintenance

This type of cylinder, due to its characteristics, has to be used within certain criteria. Correct use will give long and troublefree operation. Filtered and lubricated compressed air reduce seal wear. Verify that the load will not produce unforeseen stresses. Never combine high speed with heavy load. Always support the long stroke cylinder with intermediate brackets and never exceed the specified working conditions.
If maintenance is required, follow the instructions supplied with the repair kit.

Basic version (cylinder with sliding shoes bushes)

Ordering code
1605.16.stroke.01.MH
Possibility of a single feed cylinder head
1605.16.stroke.02.MH left end cap-side connection
1605.16.stroke.03.MH right end cap-side connection
1605.16.stroke.04.MH left end cap-rear connection*
1605.16.stroke.05.MH right end cap-rear connection*
1605.16.stroke.06.MH left end cap-bottom connection
1605.16.stroke.07.MH right end cap-bottom connection

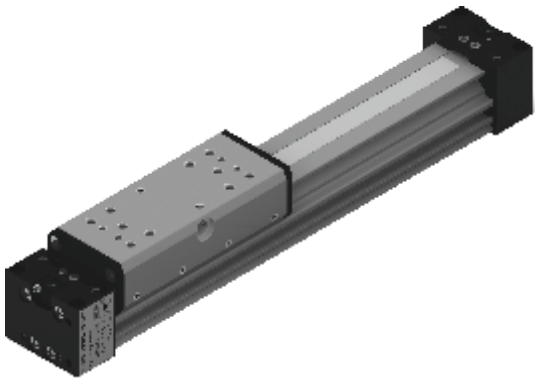

* in case of mounting with 1600.16.01F bracket use 4mm tube fitting

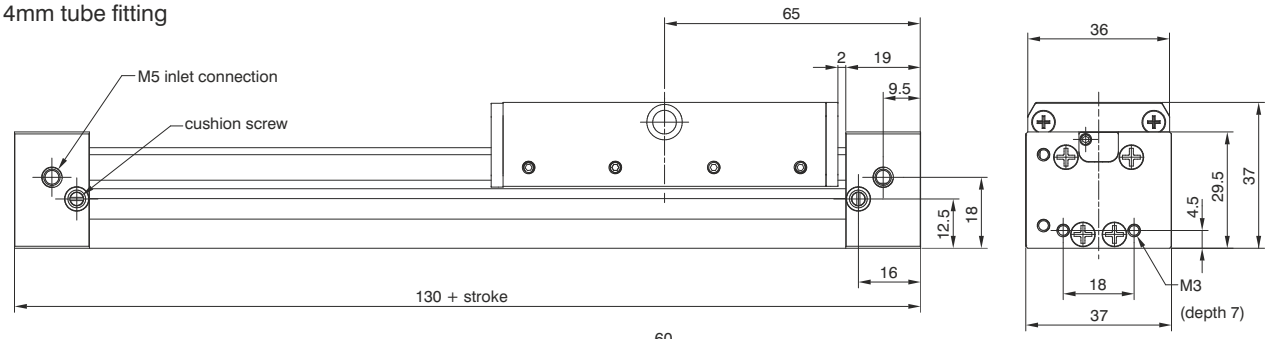

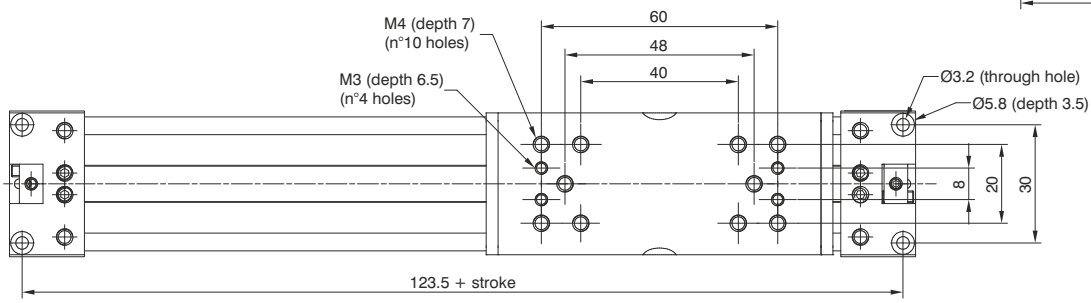

Possibility of a single feed right or left cylinder head and on 3 different end cap sides

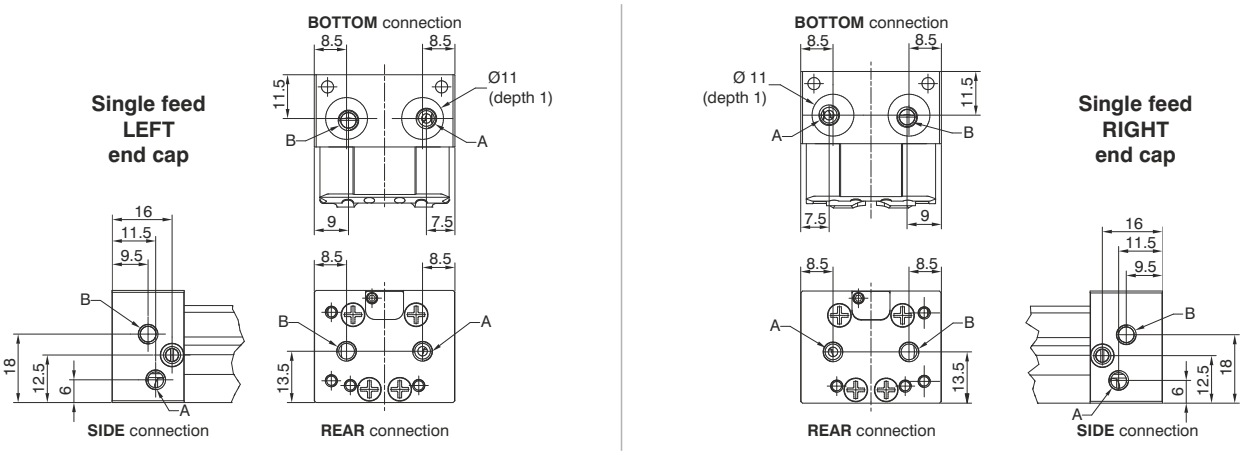

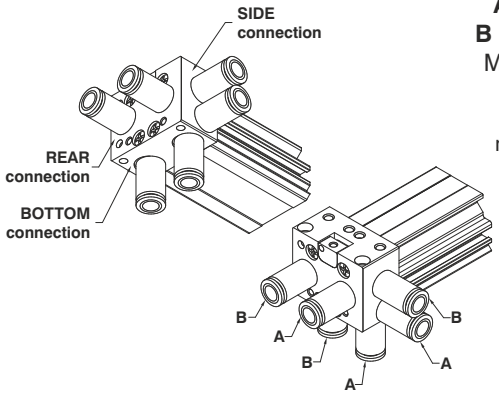

A = forward stroke connection
B = backwards stroke connection
M5 tube Ø4 and Ø6 fittings can be used for air connections.
In case of use with 1600.16.01F mounting and REAR air connections use a 4mm pipe fitting.

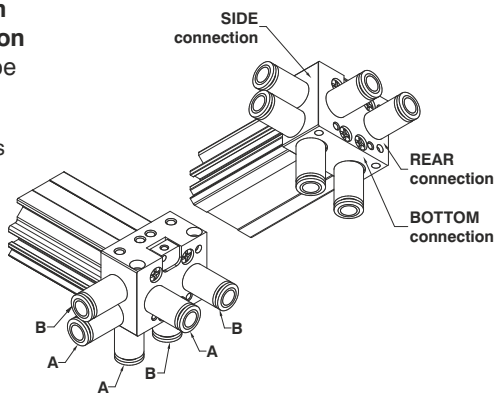

Operating end stroke decelerator diagram

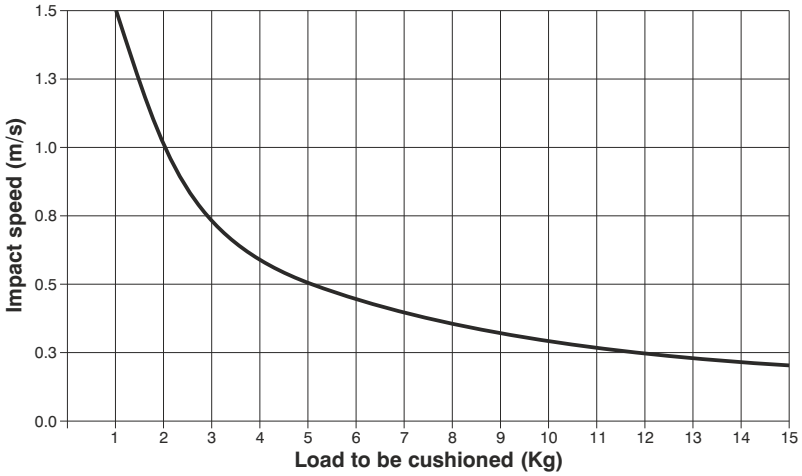

In case of extreme applications close to the maximum allowed values in the graph it is strongly recommended to ad external damping systems.

Suggested loads and moments

K1	K2	K	M	Ms	Mv
200	250	100	10	2	3
(N)			*(Nm)*		

Maximum Load and moments allowed in static or dynamic conditions (max. speed 0,2 m/s)

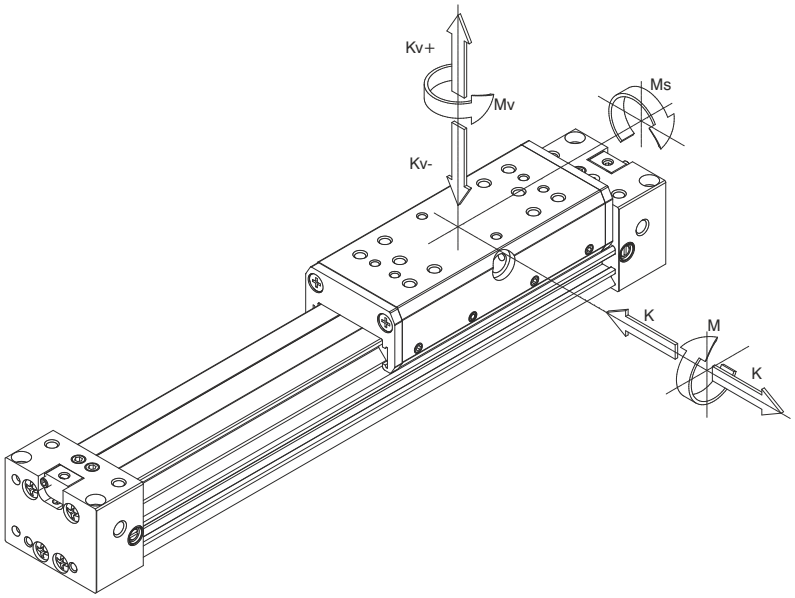

Magnetic sensors

Ordering code
1590... **LRS...** **LHS...**

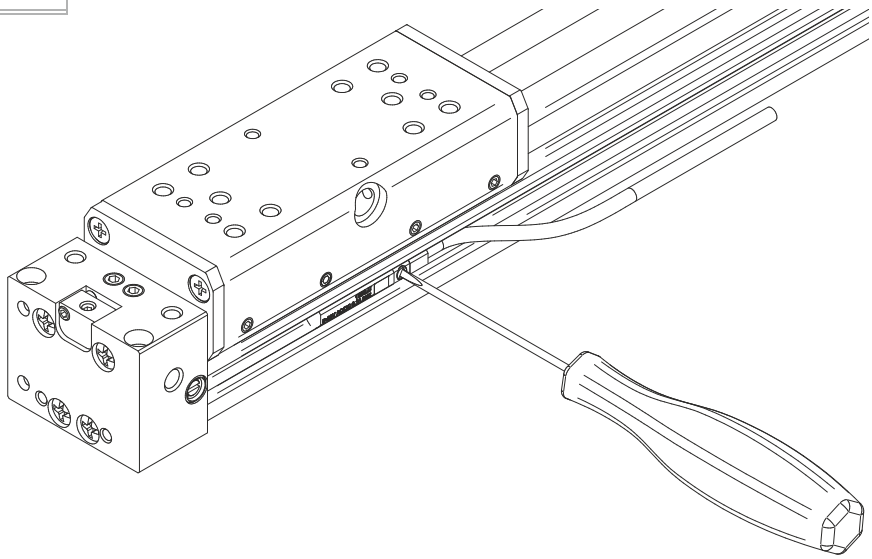

The two side slots allow the direct use of 1590....LRS... and LHS... sensors mounted from the top and positioned via the built in screw.

Mounting foot brackets

Ordering code
1600.16.01F (1 piece)

The kit comprises:
n°1 foot (plated zinc steel)
n°2 screws (plated zinc steel)

Attention: based on the stroke evaluate the need to use also side mounted supports. (see below)

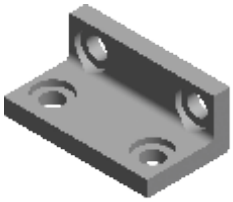

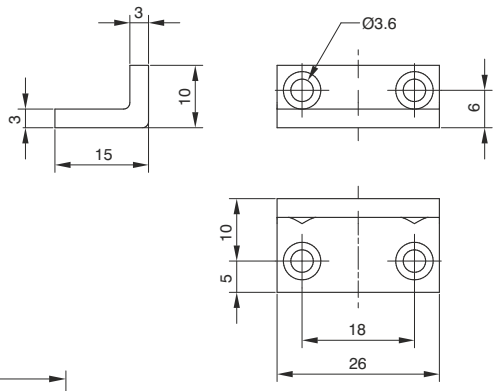

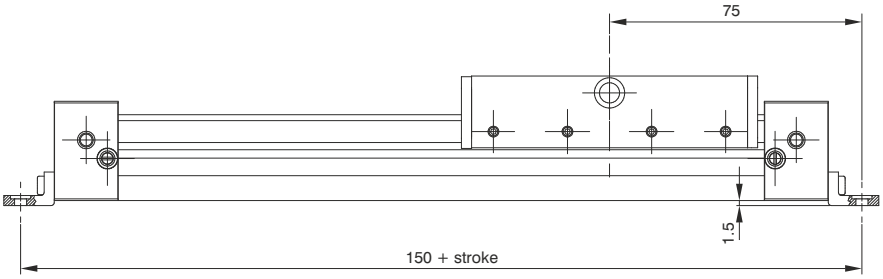

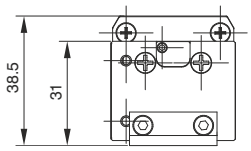

Intermediate support

Ordering code
1600.16.02F (1 piece)

The kit comprises:
n°1 support (aluminium)
n°2 screws (plated zinc steel)

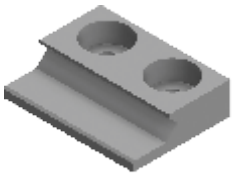

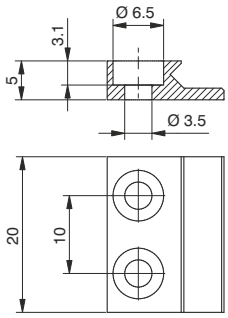

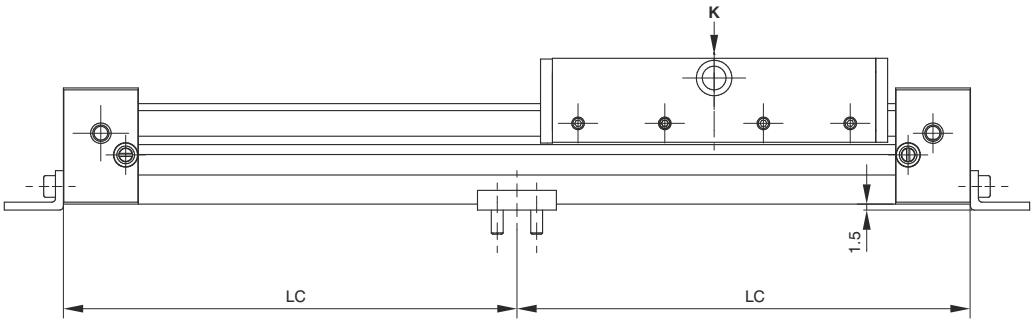

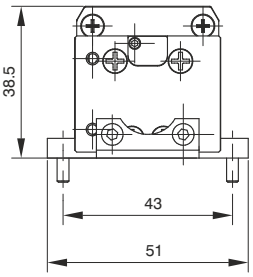

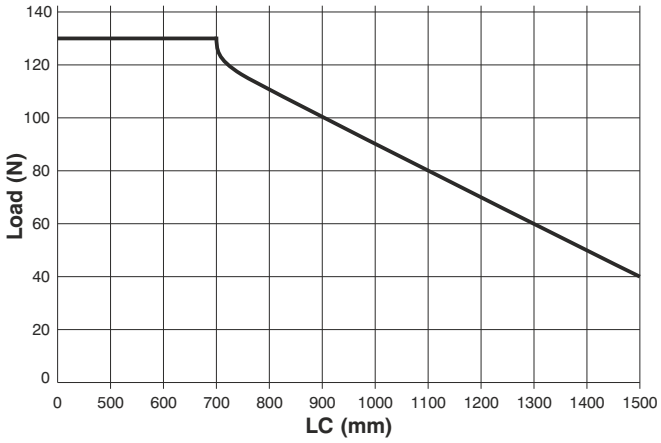

The graph shows the LC limit in conjunction with the applied load K beyond which it is necessaryto mount an intermediate side support in order to prevent the barrel from bending.

Oscillating hinge

Ordering code
1600.16.03F (1 piece)

The kit comprises:
n°2 pins (plated zinc steel)
n°2 grub screw (steel)
n°1 oscillating hinge (plated zinc steel)

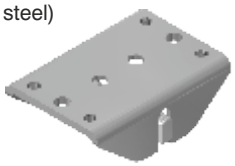

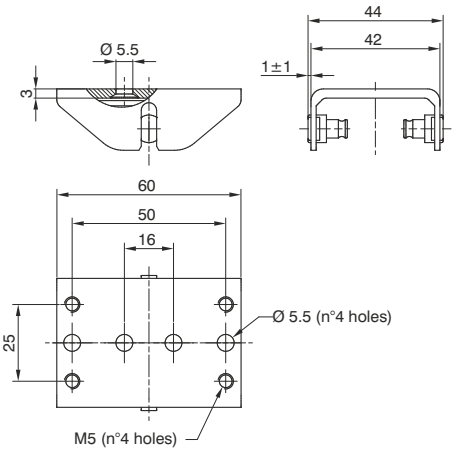

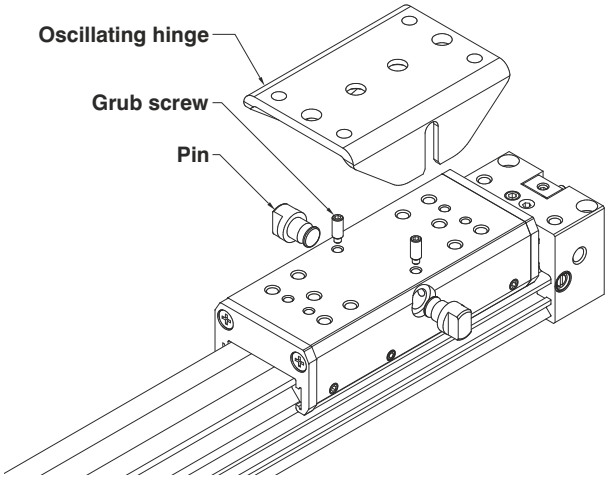

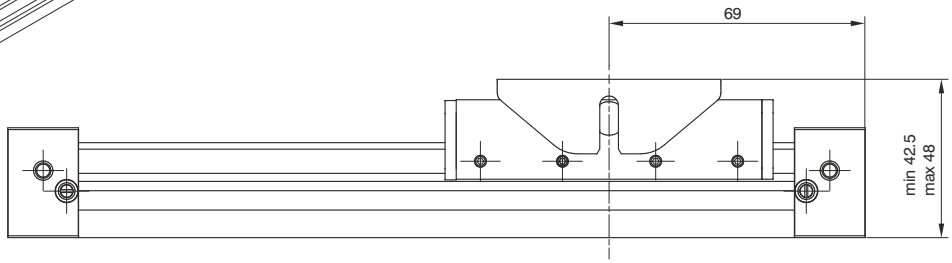

mounting sequence:
- mount the pin into the dedicated housing
- tighten the blocking grub screws in the dedicated housing

Direct mounting without brackets

Ordering code
1600.16.04F (1 piece)

The kit comprises:
n°4 screws M3x35 (plated zinc steel)
n°2 O-Rings (NBR)

Direct mounting without brackets
Thanks to the mounting holes with counter bores on the end caps it is possible to mount the cylinder directly onto the mounting surface. Having the end caps and barrel flush and in contact with the mounting plate it is not necessary to use any intermediate mounting brackets even in case of long strokes. It is also possible to supply air to the cylinder directly through the mounting plate through the two air connection on the bottom side of the end cap (06.MH and 07.MH) which are machined with counterbores.

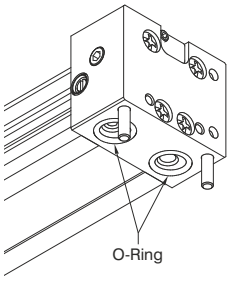

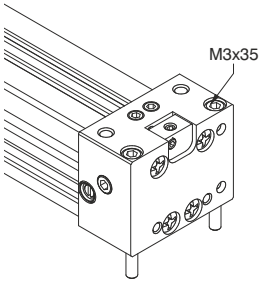

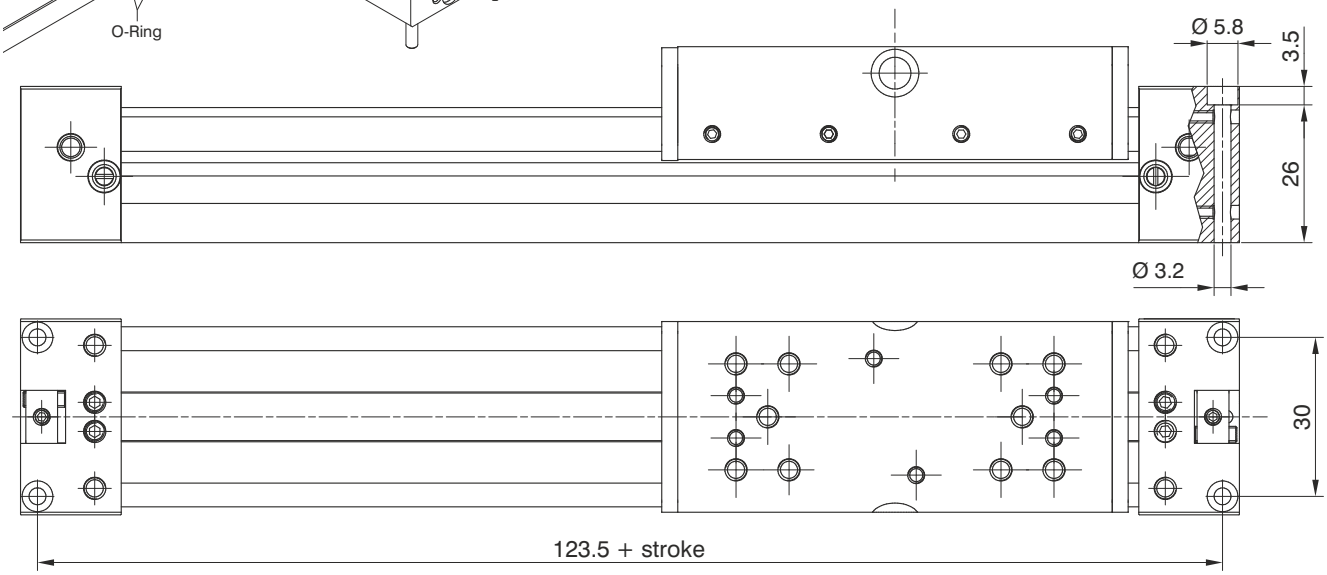

MANIPULATION

Guided compact cylinder
Series 6100
Series 6101

Twin-rod slide unit
Series 6200

Push/pull-twin rod slide unit
Series 6210

Pneumatic grippers
Series 6301 - Angular grippers - standard version
Series 6302 - 180° angular grippers
Series 6303 - Angular gripper, rack & pinion style
Series 6310 - Parallel style grippers- standard version
Series 6311 - Wide opening
Series 6312 - 3 fingers parallel style (air chuck)

Rotary actuators
Series 6400 - Double rack rotary actuators with turn table
Series 6411 - Single rack rotary actuators

Vane type rotary actuators
Series 6420

Arbitrary mount cylinders
Series 6500

Slide cylinders
Series 6600

Guide cylinders
Series 6700

Dampers
Series 6900

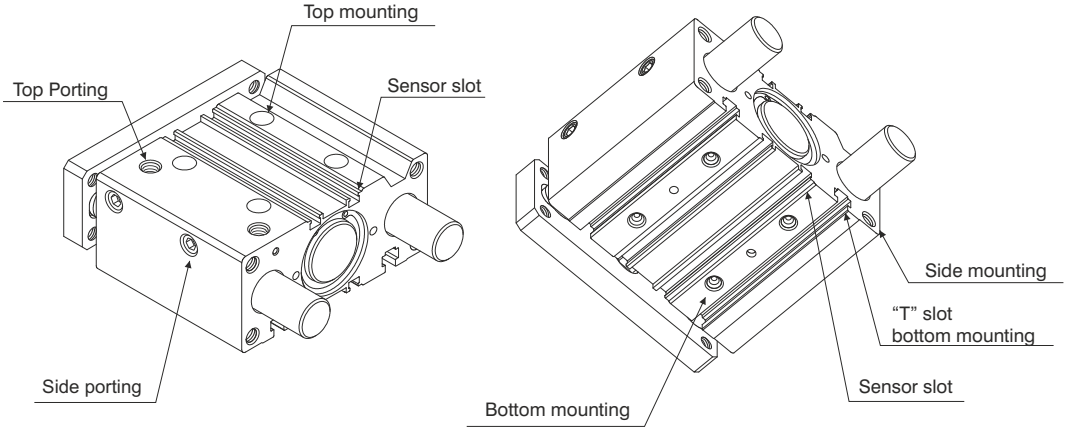

These guided compact cylinders, characterised by reduced overall dimensions, can be used for the compression, conveyance and manipulation of objects in many industrial sectors; similarly they can also be used in pushing, lifting and stopping applications.

These cylinders are available in sizes 32mm to 63 mm diameter, and comprise a single compact cylinder with integral guide rods, making it a true guide cylinder designed with installation flexibility and space saving in mind.

The rod guide is available in two styles:
Self-lubricating bronze bushes - useful for absorbing lateral loads and forces, especially as a stopper.
Bearing bushes - guaranteeing high precision and uniform movement with low friction characteristics, useful with mis-aligned loads.
Guided compact cylinders are ideal for use in applications requiring a combination of reduced dimensions and anti-rotation features. Mounting can be achieved on three sides through holes or "T" slots.

Adjustable mounting holes in the front plate ensure safe and accurate assembly. Pneumatic connections can be made to either lateral or top ports (lateral ports plugged on standard units).
When sensors are required, there are special slots in the barrel extrusion where 1580 series miniaturised sensors are easily fitted.

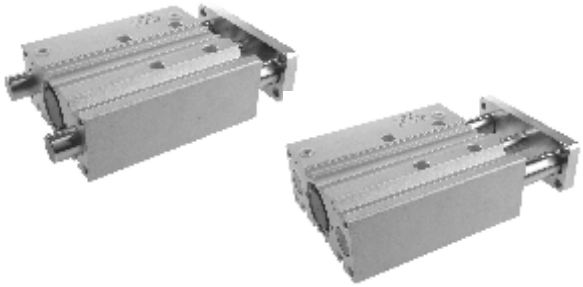

Ordering code

6100.Ø.stroke. _ . _

- **12**
- **16**
- **20**
- **25**
- **32**
- **40**
- **50**
- **63**

Side supply ports closed
L = Top supply ports closed

B = Control unit with bronze bush
C = Control unit with bearing bush

Construction characteristics

Body	anodised aluminium
Guide rods	C43 chromed steel (control unit with bronze bush) tempered and chromed steel (control unit with bearing bush)
Piston	aluminium
Piston rod	stainless steel (for bores Ø12, Ø16, Ø20, Ø25) C43 chromed steel (for bores Ø32, Ø40, Ø50, Ø63)
Rods bushing	bronze or bearing bushing
End plate	anodised aluminium
Piston seal	oil resistant NBR rubber
Piston rod seal	PUR (NBR 12-16)
Wipers	PUR
Plate	nickel plated steel

Technical characteristics

Function	double acting
Fluid	filtered and preferably lubricated air or not (If lubricated the lubrication must be continuous)
Working pressure	max. 10 bar
Working temperature	-5°C - +70°C
Cushioning	elastic bumper on both ends

Standard strokes

	Stroke											
Bore	**10**	**20**	**25**	**30**	**40**	**50**	**75**	**100**	**125**	**150**	**175**	**200**
Ø12	●	●		●	●	●	●	●				
Ø16	●	●		●	●	●	●	●				
Ø20		●		●	●	●	●	●	●	●	●	●
Ø25		●		●	●	●	●	●	●	●	●	●
Ø32			●			●	●	●	●	●	●	●
Ø40			●			●	●	●	●	●	●	●
Ø50			●			●	●	●	●	●	●	●
Ø63			●			●	●	●	●	●	●	●

Intermediate strokes can be obtained using spacers with defined length (5, 10, 15, 20 mm).
Example: It is possible to obtain a **6100.32.45.B** cylinder from a **6100.32.50.B** cylinder by inserting a spacer with length of 5 mm.
The intermediate strokes manufactured without the use of spacers are considered special executions.

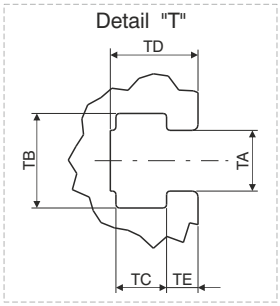

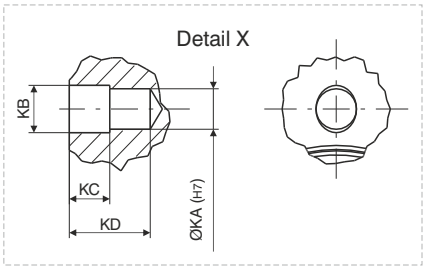

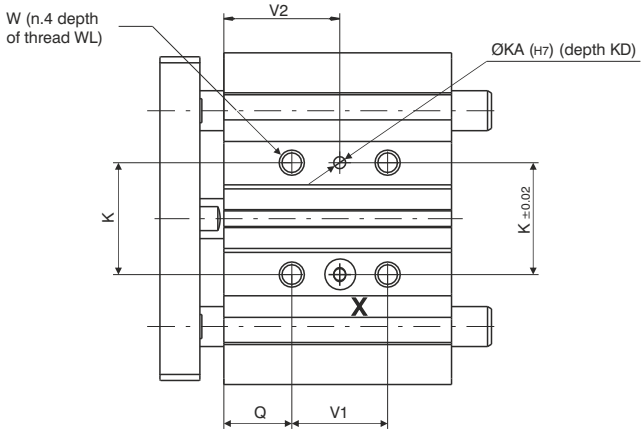

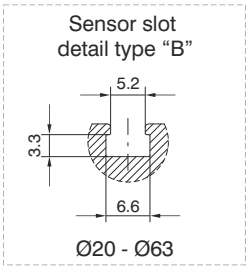

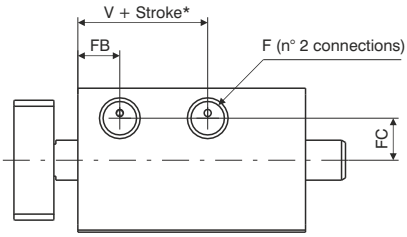

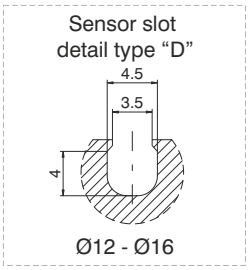

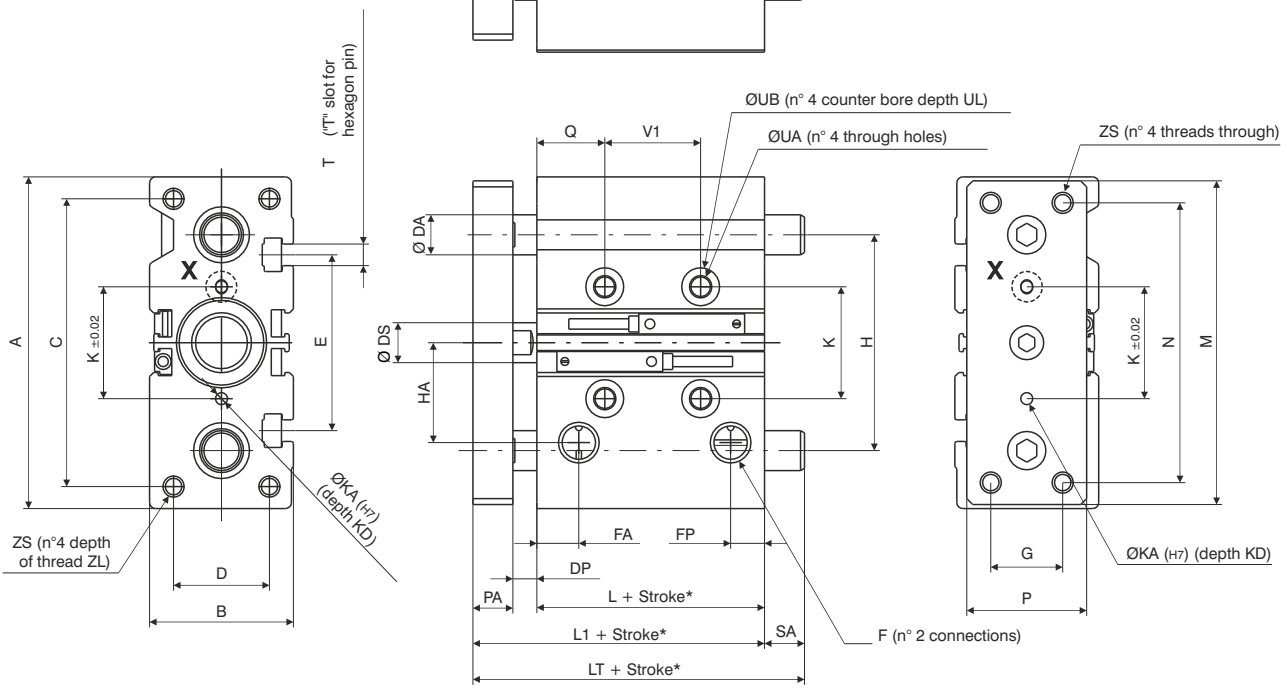

*Dimensions only refer to the "standard stroke"

	Bore	Ø12	Ø16	Ø20	Ø25	Ø32	Ø40	Ø50	Ø63
		Table of dimensions							
	A	58	64	83	93	112	120	148	162
	B	26	30	36	42	48	54	64	78
	C	40	42	72	82	98	106	130	142
	D	18	22	24	30	34	40	46	58
Control unit with bronze bushes	DA	8	10	12	16	20	20	25	25
Control unit with bearing bushes	DA	6	8	10	14	16	16	20	20
	DP	2	2	5,5	5,5	9,5	10	13	13
	DS	6	8	10	12	16	16	20	20
	E	/	/	44	50	63	72	92	110
	F	M5	M5	G1/8"	G1/8"	G1/8"	G1/8"	G1/4"	G1/4"
	FA	11	11	11	12	13	13	13	14
	FB	11	11	11	12	13	13	13	14
	FC	8,5	10	10,5	13,5	15	18	21,5	28
	FP	15	17	9	10,5	9,5	11	11	12,5
	G	14	16	18	26	30	30	40	50
	H	41,5	46	54	64	78	86	110	124
	HA	19,5	23	25	28,5	34	38	47	55
	K	23	24	28	34	42	50	66	80
	KA	/	/	3	4	4	4	5	5
	KB	/	/	3,5	4,5	4,5	4,5	6	6
	KC	/	/	3	3	3	3	4	4
	KD	/	/	6	6	6	6	8	8
	L	29	31	38	38,5	38,5	44	44	49
	L1	39	43	53,5	54	60	66	72	77
Control unit with bronze bushes, stroke ≤50	LT	39	43	53,5	54	97	97	106,5	106,5
Control unit with bronze bushes, 50< stroke ≤200	LT	57	64	84,5	85	102	102	118	118
Control unit with bearing bushes	LT	See table 1							
	M	56	62	81	91	110	118	146	158
	N	48	52	70	78	96	104	130	130
	PA	8	10	10	10	12	12	15	15
	P	22	25	30	38	44	44	60	70
	Q	5	5	17,5	17,5	21,5	22	24	24
Control unit with bronze bushes, stroke ≤50	SA	/	/	/	/	37	31	34,5	29,5
Control unit with bronze bushes, 50< stroke ≤200	SA	18	21	31	31	42	36	46	41
Control unit with bearing bushes	SA	See table 1							
	T	/	/	M5	M5	M6	M6	M8	M10
	TA	/	/	5,4	5,4	6,5	6,5	8,5	11
	TB	/	/	8,4	8,4	10,5	10,5	13,5	17,8
	TC	/	/	4,5	4,5	5,5	5,5	7,5	10
	TD	/	/	7,8	8,2	9,5	11	13,5	18,5
	TE	/	/	2,8	3	3,5	4	4,5	7
	UA	4,3	4,3	5,6	5,6	6,6	6,6	8,6	8,6
	UB	8	8	9,5	9,5	11	11	14	14
	UL	4,5	4,5	5,5	5,5	7,5	7,5	9	9
	V	14	14	13	13	7,5	13	9	14
	V1	See table 2							
	V2	See table 2							
	W	M5	M5	M6x1	M6x1	M8x1,25	M8x1,25	M10x1,5	M10x1,5
	WL	10	10	12	12	16	16	20	20
	Z	M4	M5	M5x0,8	M6x1	M8x1,25	M8x1,25	M10x1,5	M10x1,5
	ZL	9	11	13	15	20	20	22	22
	ZS	M4	M5x0,8	M5x0,8	M6x1	M8x1,25	M8x1,25	M10x1,5	M10x1,5

Control unit with bearing bushes

Table 1	LT			SA		
Bore	stroke≤30	30<stroke≤100	100<stroke≤200	stroke≤30	30<stroke≤100	100<stroke≤200
Ø12	39	53	53	/	14	/
Ø16	43	64	64	/	21	/
Ø20	47	72	72	/	18,5	49
Ø25	49	77	77	/	23	48
	stroke<50	50≤stroke≤100	100<stroke≤200	stroke<50	50≤stroke≤100	100<stroke≤200
Ø32	/	87	117	/	27	57
Ø40	/			/	21	51
Ø50	/	92	127	/	20	55
Ø63	/			/	15	50

Table 2	V1			V2		
Bore	stroke≤30	30<stroke≤100	100<stroke≤200	stroke≤30	30<stroke≤100	100<stroke≤200
Ø12	4+stroke			/	/	/
Ø16				/	/	/
Ø20	24	44	120	29,5	39,5	77,5
Ø25						
	stroke≤25	25<stroke≤100	100<stroke≤200	stroke≤25	25<stroke≤100	100<stroke≤200
Ø32	24	48	124	33,5	45,5	83,5
Ø40				34	46	84
Ø50				36	48	86
Ø63	28	52	128	38	50	88

	Bore							
	Ø12	Ø16	Ø20	Ø25	Ø32	Ø40	Ø50	Ø63
Stroke	**Control unit with bronze bushes**							**Weight (gr.)**
10	240	330	/	/	/	/	/	/
20	280	380	670	950	/	/	/	/
25	/	/	/	/	1690	1950	3360	4180
30	310	430	750	1050	/	/	/	/
40	350	480	830	1160	/	/	/	/
50	390	530	910	1270	2070	2370	4000	4940
75	500	680	1170	1650	2470	2830	4730	5780
100	5903	800	1370	1920	2850	3250	5370	6540
125	/	/	1570	2190	3240	3680	6010	7290
150	/	/	1760	2470	3620	4100	6650	8050
175	/	/	1960	2740	4000	4530	7290	8800
200	/	/	2160	3010	4380	4950	7930	9560
Stroke	Moving parts							
10	100	155	/	/	/	/	/	/
20	108	170	330	520	/	/	/	/
25	/	/	/	/	1070	1140	2150	2500
30	116	185	350	560	/	/	/	/
40	124	200	380	600	/	/	/	/
50	132	215	400	640	1230	1300	2400	2750
75	152	250	520	840	1420	1490	2750	3090
100	172	285	580	950	1580	1650	3000	3350
125	/	/	640	1050	1740	1810	3260	3600
150	/	/	700	1150	1910	1980	3510	3860
175	/	/	760	1250	2070	2140	3760	4110
200	/	/	820	1350	2230	2300	4020	4360
Stroke	**Control unit with bearing bushes**							
10	240	340	/	/	/	/	/	/
20	270	390	700	980	/	/	/	/
25	/	/	/	/	1540	1790	3110	3930
30	300	430	770	1070	/	/	/	/
40	350	510	890	1250	/	/	/	/
50	390	560	970	1340	1850	2150	3660	4590
75	470	670	1140	1570	2300	2640	4410	5460
100	560	790	1310	1810	2620	3000	4960	6120
125	/	/	1520	2080	2990	3420	5600	6880
150	/	/	1690	2310	3310	3780	6150	7540
175	/	/	1870	2540	3620	4140	6700	8210
200	/	/	2040	2770	3940	4500	7250	8870
Stroke	Moving parts							
10	95	145	/	/	/	/	/	/
20	100	153	310	490	/	/	/	/
25	/	/	/	/	820	890	1770	2110
30	105	161	330	520	/	/	/	/
40	110	169	370	580	/	/	/	/
50	120	177	390	610	940	1010	1950	2300
75	145	197	440	690	1110	1180	2240	2590
100	170	217	480	760	1230	1300	2430	2770
125	/	/	560	880	1410	1480	2710	3050
150	/	/	600	950	1530	1600	2890	3240
175	/	/	650	1020	1650	1720	3080	3420
200	/	/	700	1100	1770	1830	3270	3610

Working pressure																**Cylinder theoretic force (N)**
2 bar	23	17	40	30	63	47	98	76	161	121	251	211	393	330	623	561
3 bar	34	26	60	45	94	71	147	113	241	181	377	317	589	495	935	841
4 bar	45	34	80	60	126	94	196	151	322	241	503	422	785	660	1247	1121
5 bar	57	43	101	76	157	118	246	189	402	302	629	528	982	825	1559	1402
6 bar	68	51	121	91	188	142	295	227	482	362	754	634	1178	989	1870	1682
7 bar	79	60	141	106	220	165	344	265	563	422	880	739	1374	1154	2182	1962
8 bar	90	68	161	121	251	189	393	302	643	482	1006	845	1570	1319	2494	2242
9 bar	102	77	181	136	283	212	442	340	724	543	1131	950	1767	1484	2805	2523
10 bar	113	85	201	151	314	236	491	378	804	603	1257	1056	1963	1649	3117	2803
Piston area	out	in	out	in	out	in	out	in	out	in	out	in	out	in	out	in
(mm^2)	113	85	201	151	314	236	491	378	804	603	1257	1056	1963	1649	3117	2803

								Maximum permissible Momentum
J	0,08	0,09	0,11	0,18	0,29	0,52	0,91	1,54

How to calculate the Momentum: $\mathbf{Ec} = \frac{1}{2}\ \mathbf{m}\ \mathbf{V}^2$ (J)

m = Total moving mass: weight of driven object added to weight of cylinder moving parts (kg)

V = max. speed: equal to average speed + 40% (m/sec)

5

Permissible lateral load (applied on overall plate)

		Bore							
		Ø12	Ø16	Ø20	Ø25	Ø32	Ø40	Ø50	Ø63
Version	**Stroke**	**Permissible lateral load (N)***							
Control unit with bronze bushes	10	30	48						
	20	23	37	49	69				
	25					203	203	296	296
	30	19	30	43	60				
	40	16	25	38	54				
	50	14	20	35	49	164	164	245	245
	75	12	18	87	116	182	182	273	273
	100	10	15	75	100	159	159	241	241
	125			66	88	142	142	216	216
	150			59	79	127	127	195	195
	175			54	71	116	116	179	179
	200			49	65	106	106	164	164
Control unit with bearing bushes	10	20	35						
	20	15	28	58	69				
	25					191	190	208	206
	30	13	22	48	68				
	40	11	18	101	132				
	50	10	16	90	118	157	157	173	171
	75	8	14	70	93	164	163	223	221
	100	6	11	58	77	144	144	199	196
	125			62	80	203	203	264	262
	150			54	70	186	185	242	240
	175			48	62	171	171	224	221
	200			43	55	158	158	207	205
Version	**Stroke**	**Recommended torque moments (Nm)**							
Control unit with bronze bushes	10	0,40	0,70						
	20	0,35	0,65	1,1	1,8				
	25					6,4	7,0	13,0	14,7
	30	0,28	0,48	0,9	1,6				
	40	0,25	0,45	0,8	1,4				
	50	0,21	0,39	0,8	1,3	5,1	5,7	10,8	12,1
	75	0,42	0,68	1,9	3,0	5,7	6,3	12,0	13,5
	100	0,40	0,60	1,6	2,6	5,0	5,5	10,6	11,9
	125			1,4	2,3	4,4	4,9	9,5	10,7
	150			1,3	2,0	4,0	4,4	8,6	9,7
	175			1,2	1,8	3,6	4,0	7,9	8,9
	200			1,1	1,7	3,3	3,7	7,2	8,2
Control unit with bearing bushes	10	0,62	0,70						
	20	0,41	0,65	1,3	2,1				
	25					6,0	6,6	9,2	10,2
	30	0,33	0,48	1,0	1,8				
	40	0,30	0,45	2,2	3,4				
	50	0,48	0,39	1,9	3,0	4,9	5,4	7,6	8,5
	75	0,38	0,68	1,5	2,4	5,1	5,6	9,8	11,0
	100	0,32	0,60	1,3	2,0	4,5	5,0	8,7	9,7
	125			1,3	2,1	6,3	7,0	11,6	13,0
	150			1,2	1,8	5,8	6,4	10,7	11,9
	175			1,0	1,6	5,3	5,9	9,8	11,0
	200			0,9	1,4	4,9	5,4	9,1	10,2

*(Applied on overall plate)

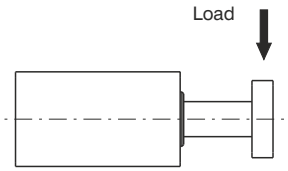

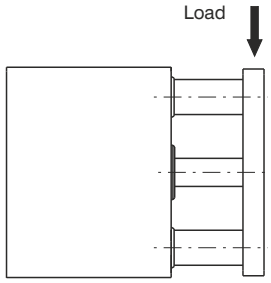

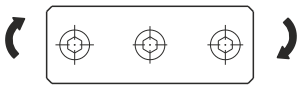

Stopper device applications

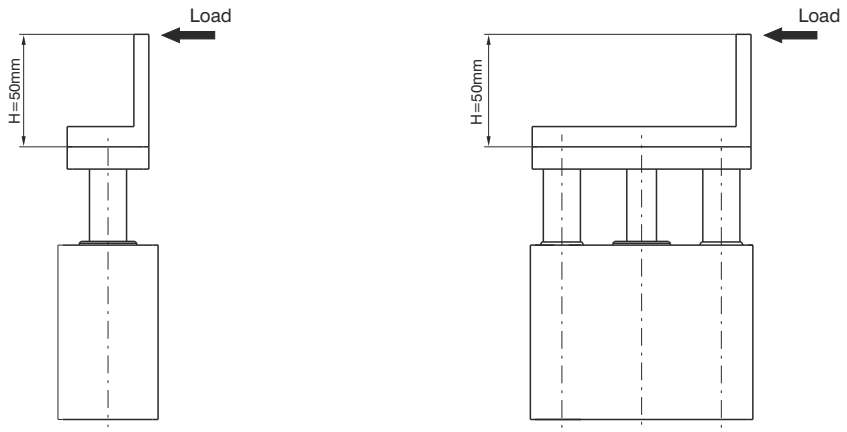

ATTENTION: if H>50 mm use larger bore

Control unit with bronze bushes

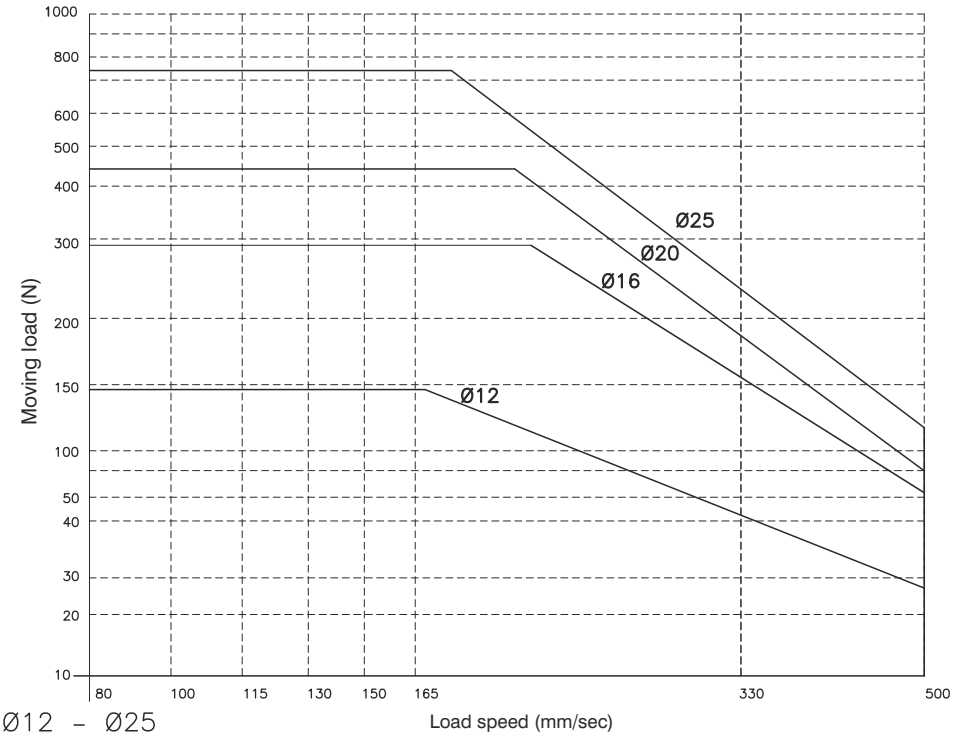

Ø12 – Ø25

ATTENTION: use with stroke ≤ 30 mm

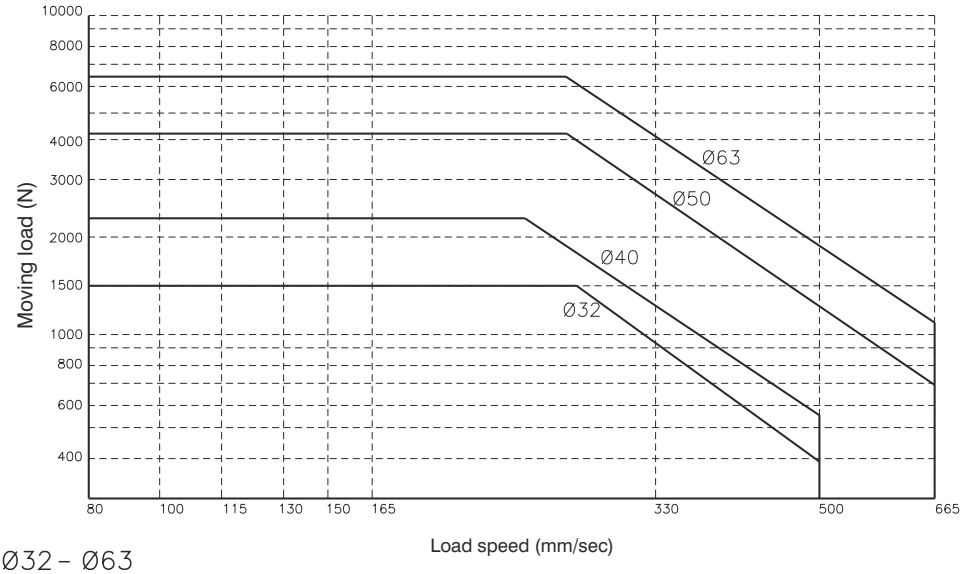

Ø32 – Ø63

ATTENTION: use with stroke ≤ 50 mm

5

Handling applications

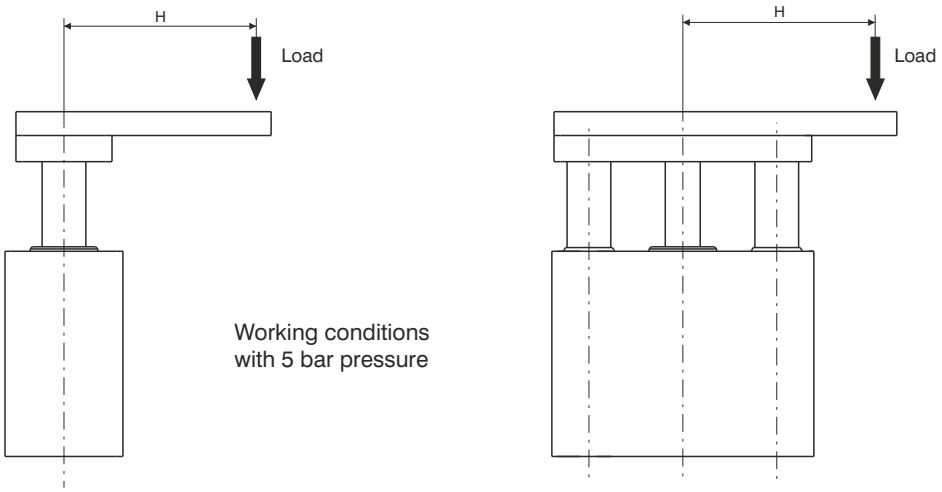

Control unit with bronze bushes

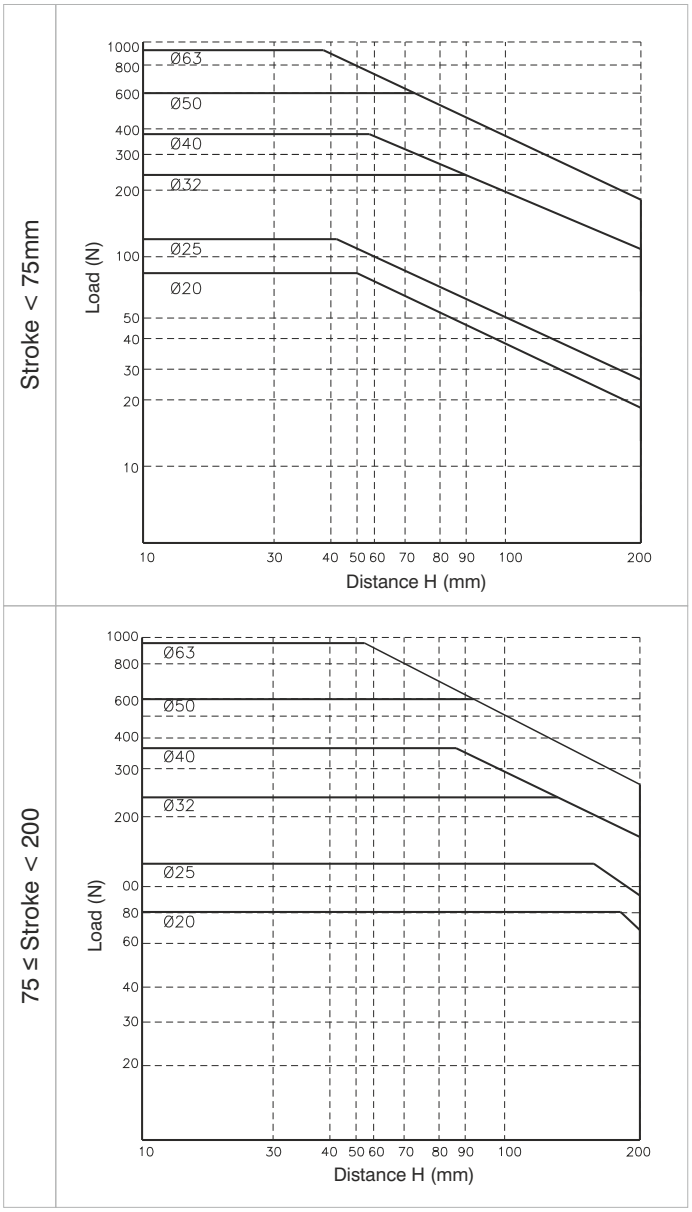

Handling applications

Control unit with bearing bushes

Ø20 – Ø25		Ø32 - Ø63	
Stroke < 40 mm	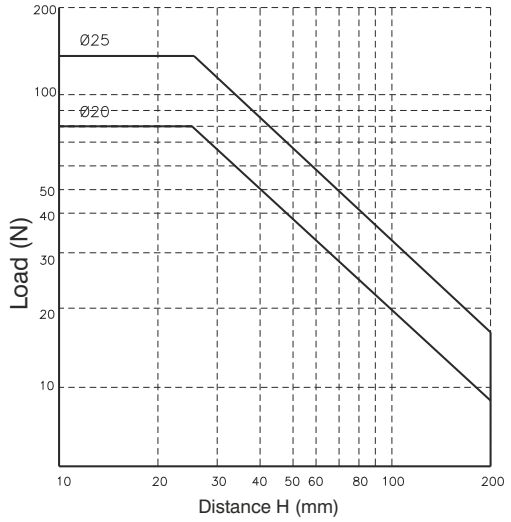	Stroke < 75 mm	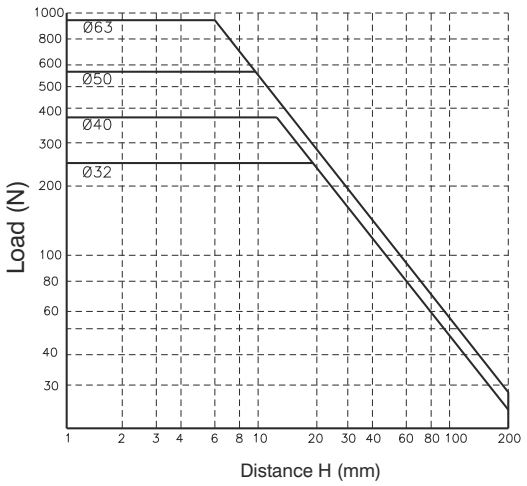
40 < Stroke < 125 mm	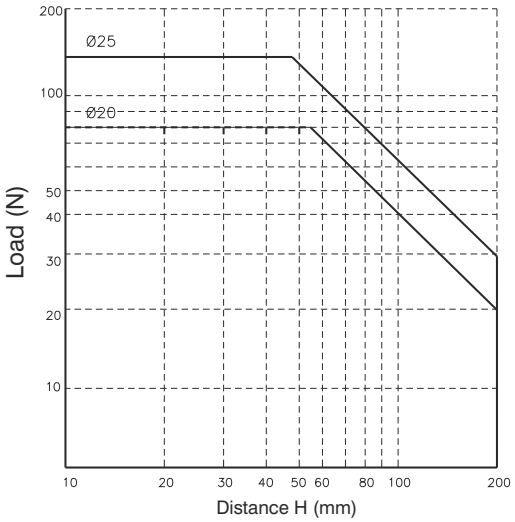	75 < Stroke < 125 mm	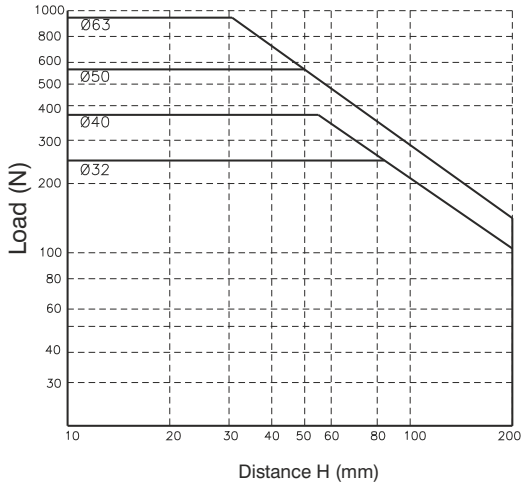
125 ≤ Stroke < 200 mm	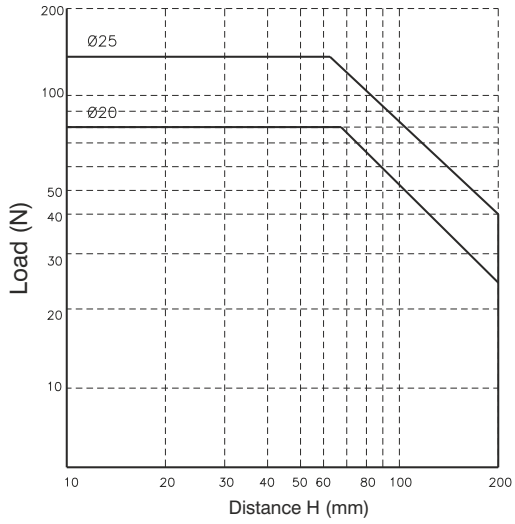	125 ≤ Stroke < 200 mm	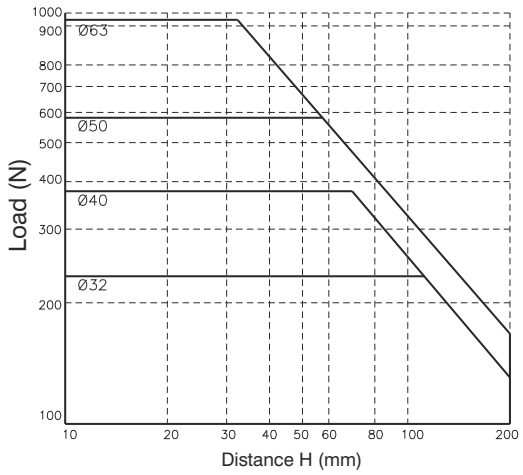

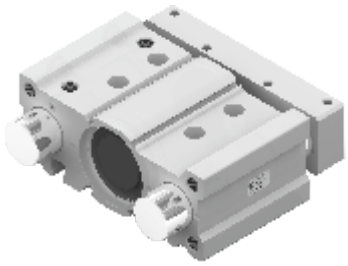

Ordering code

6101.80.stroke. B . _

Side supply ports closed
L = Top supply ports closed

Construction characteristics

Body	anodised aluminium
Rods	C43 chromed steel
Piston	aluminium
Piston rod	C43 chromed steel
Piston rod bushing	sintered bronze
Rod bushing	teflon coated bush
End cover / End plate	aluminium
Piston seal	NBR oil-resistant rubber
Piston rod seal	PUR
Plate	anodised aluminium

Technical characteristics

Function	double acting
Fluid	filtered and preferably lubricated air or not (If lubricated the lubrication must be continuous)
Max. pressure	max. 10 bar
Working temperature	-5°C - +70°C
Cushioning	elastic bumper on both ends

Standard strokes

	Stroke							
Bore	25	50	75	100	125	150	175	200
Ø80	●	●	●	●	●	●	●	●

Intermediate strokes can be obtained by adding specific spacers (5, 10, 15, 20mm)
Example: It is possible to obtain a **6101.80.45.B** cylinder from a **6101.80.50.B** cylinder by adding a 5mm spacer (the overall dimension will remain as per the 50mm stroke). The Intermediate strokes manufactured without the use of spacers are considered special executions.

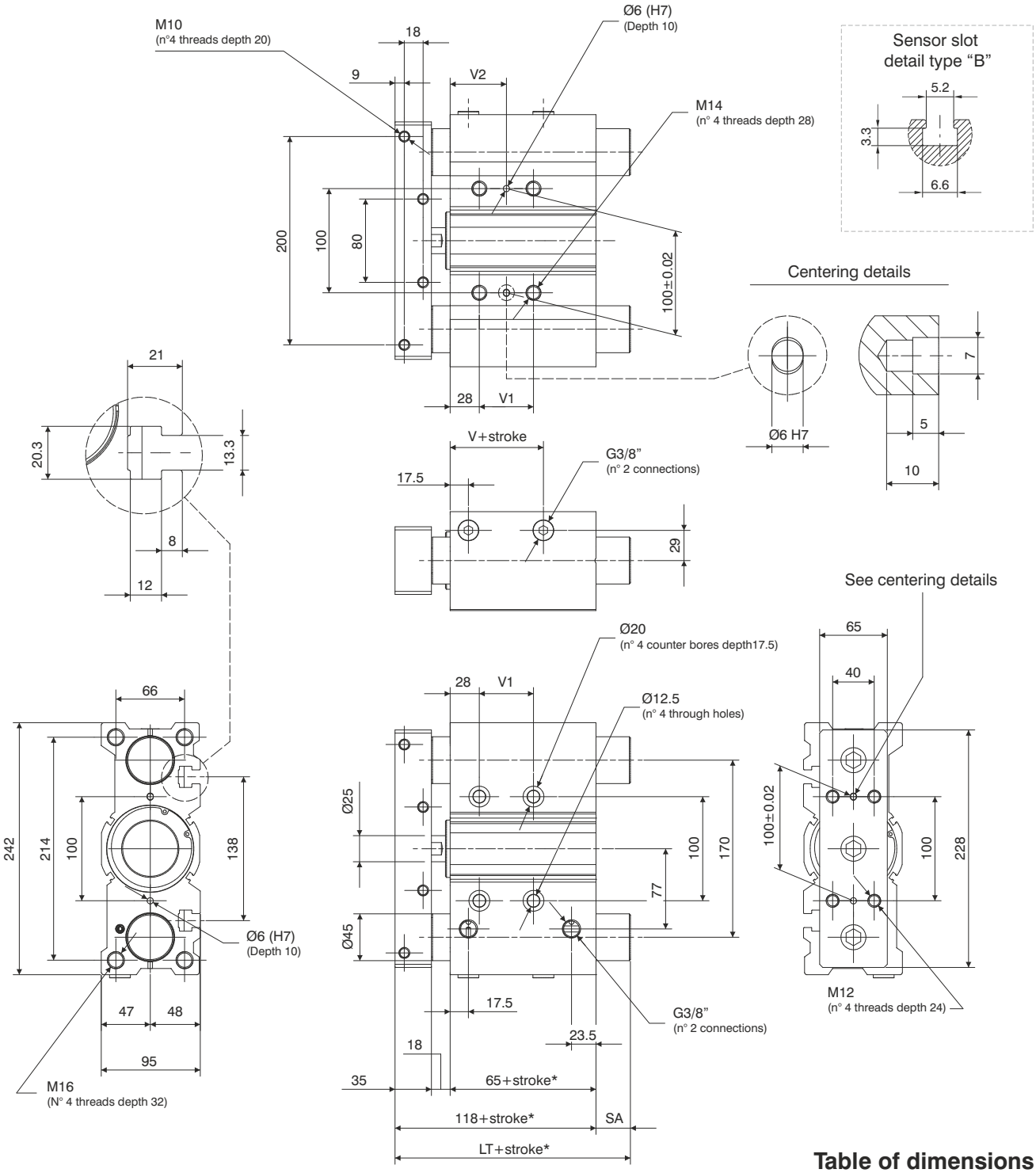

*Dimensions only refer to the "standard stroke"

Table of dimensions

	25	LT	118
stroke	50		118
	> 50		151
		V	14.5
	25	V1	28
	50		52
stroke	75		52
	100		52
	>100		128
	25	V2	42
	50		54
stroke	75		54
	100		54
	>100		92
	25	SA	0
stroke	50		
	> 50		33

Cylinder theoretic force (N)

Working pressure		
2 bar	1005	907
3 bar	1508	1361
4 bar	2011	1814
5 bar	2513	2268
6 bar	3016	2721
7 bar	3519	3175
8 bar	4021	3629
9 bar	4524	4082
10 bar	5027	4536
Effective area (mm^2)	out	in
	5027	4536

Recommended torque moments

Stroke	N/m
25	49
50	41
75	51
100	45
125	41
150	38
175	35
200	32

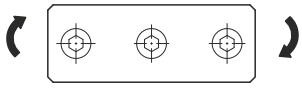

"Stopper" device applications

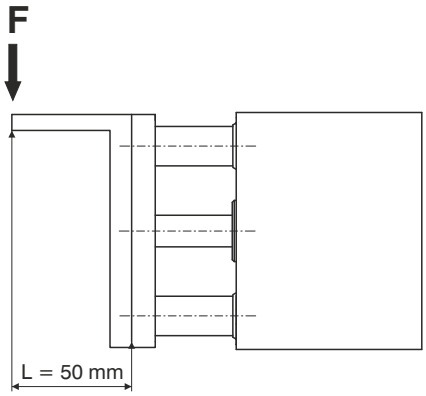

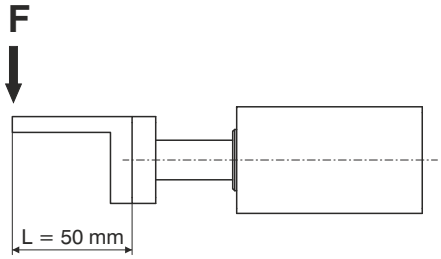

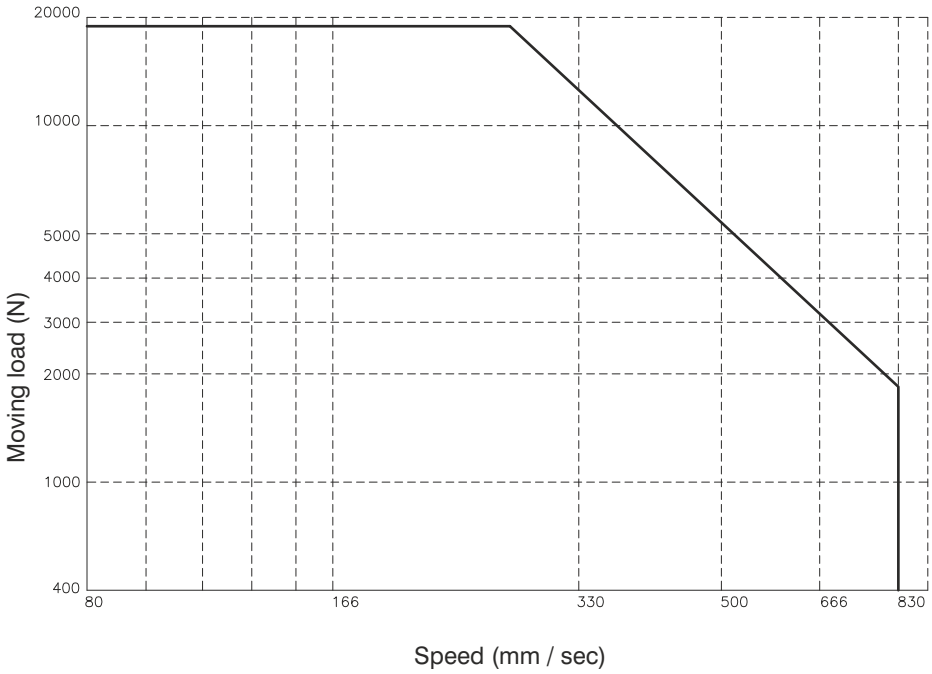

ATTENTION : max stroke 50 mm

Handling applications

VERTICAL assembly position

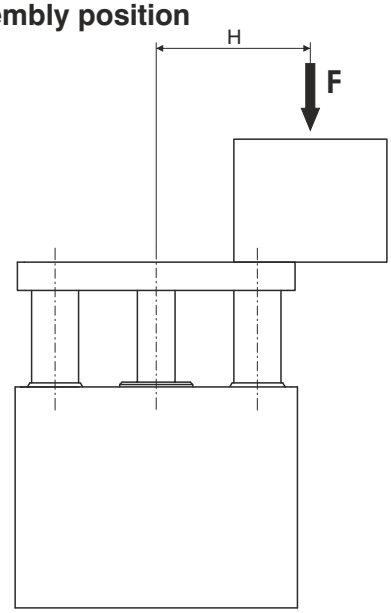

HORIZONTAL assembly position

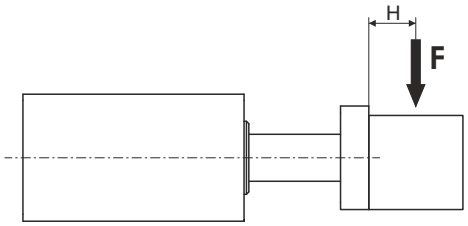

STROKE ≤ 50 mm / V = 200 mm/s

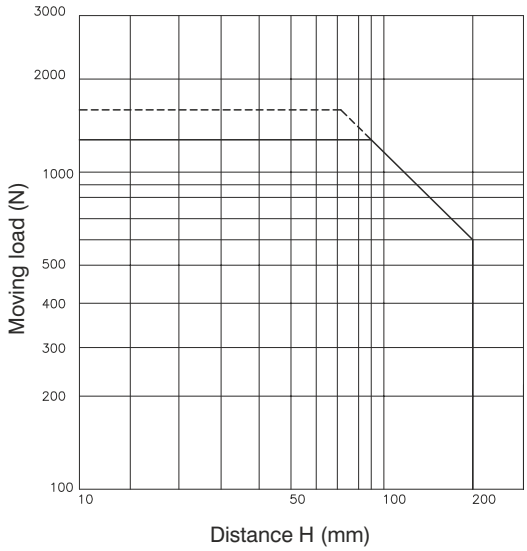

H= 50 mm / V = 200 mm/s

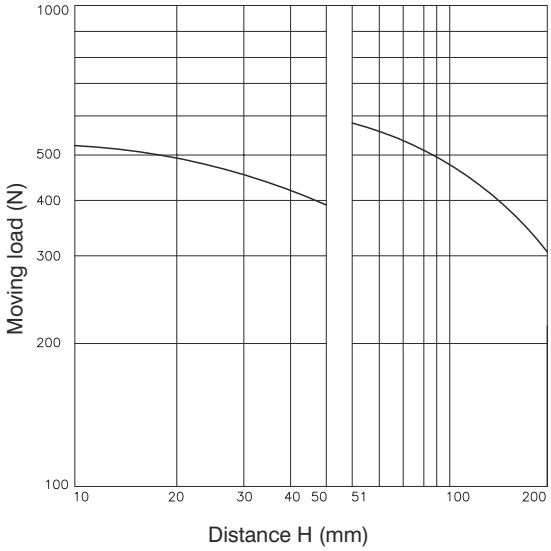

STROKE > 50 mm / V = 200 mm/s

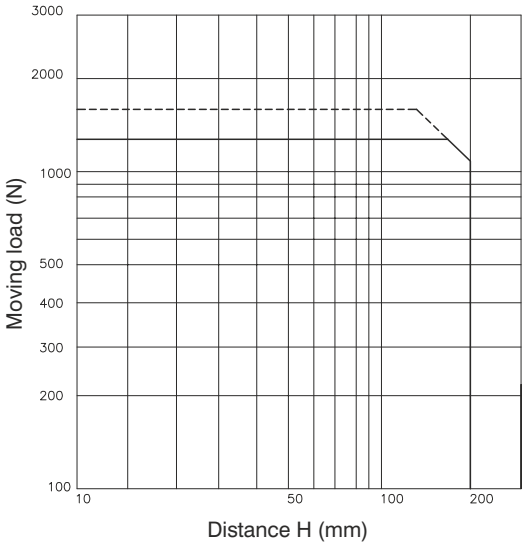

H= 100 mm / V = 200 mm/s

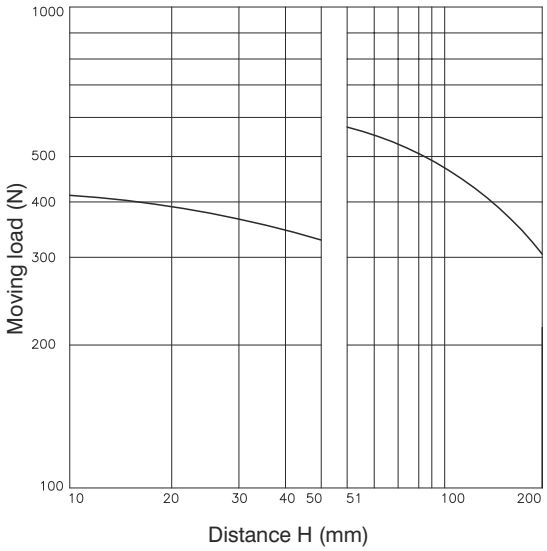

——— Working pressure : 4 bar
- - - - - - - Working pressure : 5 bar

General

TWIN-ROD SLIDE UNITS SERIES 6200 AND 6210

The 6200 series twin-rod linear guide units are wide cylinders used in manipulation applications and are characterised by their high force output thanks to their double piston design.
Bores range from 10mm to 32mm diameter, with sintered bronze bearings for standard applications and linear ball bearings for more rugged applications.
One major characteristic of these cylinders is the precision of their anti-rotational design, with the possibility of regulating the stroke to within 0.5mm.
When using magnetic sensors, the 1580 series sensor sits entirely within the extrusion, resulting in a smooth profile.

The liner guided units range includes , alongside the conventional two rod version with flange series 6200 , also the through rod version with twin flanges series 6210

Thanks to the twin-rod, double yoke design of the 6210 series it is possible to either fix the body and use the ends of the rods, or alternatively to fix the rod ends and use the body as the moving part. The cylinder can be piped through the body or through the rods depending on the application.
Stroke limiting screws are fitted at either end of the stroke. The substitution of these screws with shock absorbers makes it possible to use the cylinder on higher velocity applications (up to 500mm/sec.)
Slots are provided along the edge of these units to accommodate 1580 series miniature sensors.

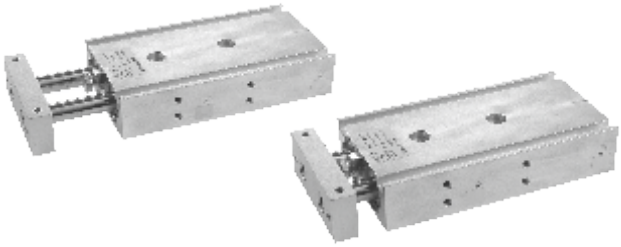

Ordering code

6200.Ø.stroke. _

- **10**
- **15**
- **20**
- **25**
- **32**

- **B** = Control unit with bronze bush
- **C** = Control unit with bearing bush

Construction characteristics

Body	anodised aluminium
Rods	C43 chromed steel (control unit with bronze bush) tempered and chromed steel (control unit with bearing bush)
Piston	aluminium
Rod bushing	brass
End plate	anodised aluminium
Piston seal	oil resistant NBR rubber
Piston rod seal	PUR
Plate	anodised aluminium

Technical characteristics

Function	double acting
Fluid	filtered and preferably lubricated air or not (If lubricated the lubrication must be continuous)
Max. pressure	7 bar
Working temperature	-5°C - +70°C
Cushioning	elastic bumper

Standard strokes

Bore	Stroke														
	10	15	20	25	30	35	40	45	50	60	70	75	80	90	100
Ø10	●	●	●	●	●	●	●	●	●	●	●	●			
Ø15	●	●	●	●	●	●	●	●	●	●	●	●	●	●	●
Ø20	●	●	●	●	●	●	●	●	●	●	●	●	●	●	●
Ø25	●	●	●	●	●	●	●	●	●	●	●	●	●	●	●
Ø32	●	●	●	●	●	●	●	●	●	●	●	●	●	●	●

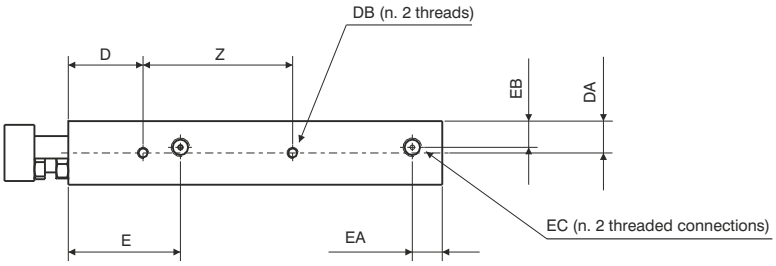

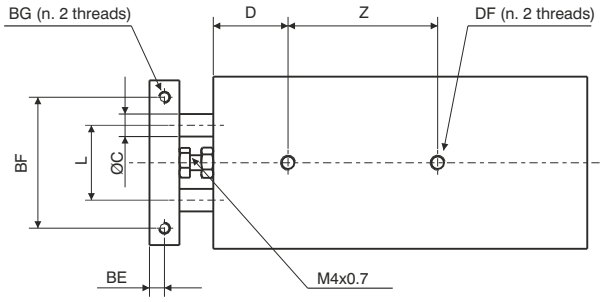

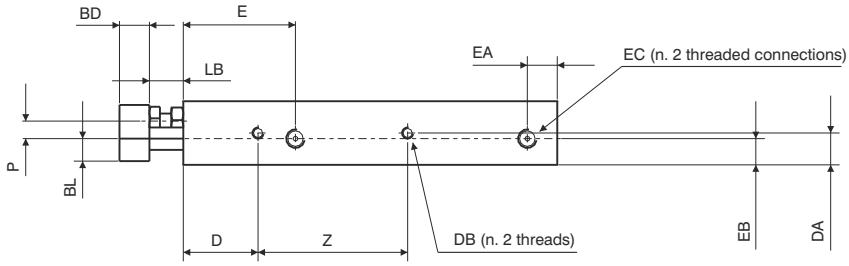

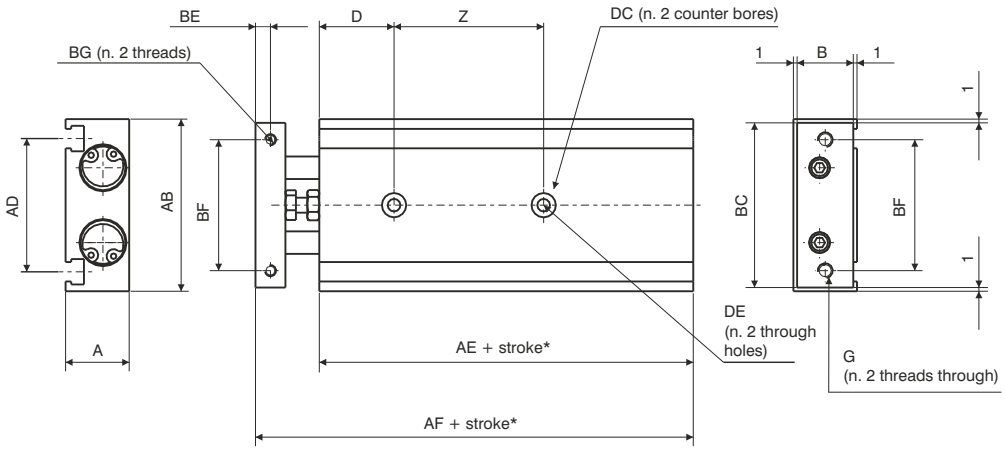

*Dimensions only refer to the "standard stroke"

Sensor slot
detail type “B”

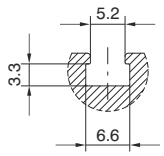

Bore		Ø10	Ø15
A		17	20
AB		46	58
AD		35,6	48
AE		55	60
AF		72	79
B		15	18
BC		44	56
BD		8	10
BE		4	5
BF		35	45
BG		M3x0,5	M4x0,7
	Useful depth	5	6
BL		6	9
C		6	8
D		20	30
DA		8,5	10
DB		M3x0,5	M4x0,7
	Useful depth	4,5	5
DC		6,5	8
	depth	3,3	4,4
DE		3,4	4,3
DF		M4x0,7	M5x0,8
	Useful depth	7	8
E		30	38,5
EA		8	8
EB		7	10
EC		M5x0,8	M5x0,8
	Useful depth	4,5	4,5
F		M4x0,7	M4x0,7
G		M4x0,7	M5x0,8
L		20	25
LB		9	9
P		4,7	4,5
Z stroke	10 - 25	30	25
	30 - 50	40	35
	60 - 75	50	45
	80	-	45
	90-100	-	55

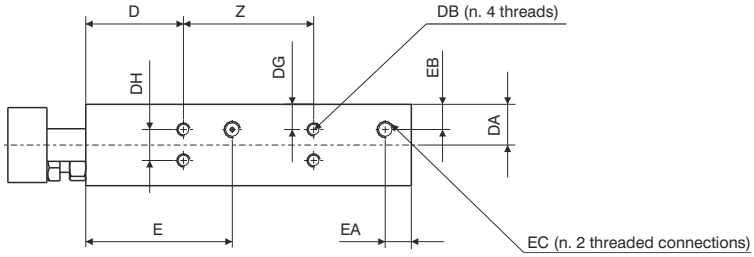

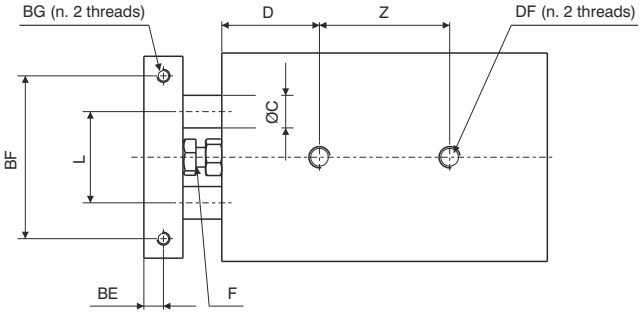

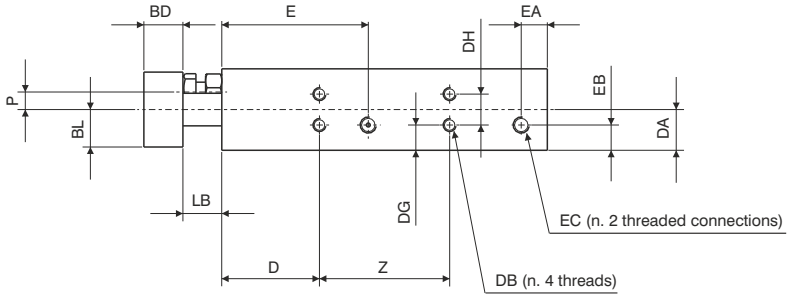

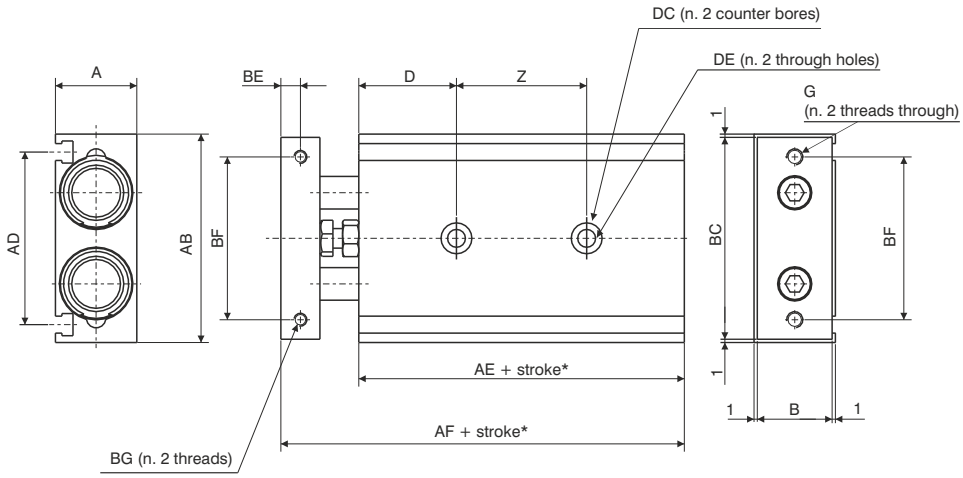

*Dimensions only refer to the "standard stroke"

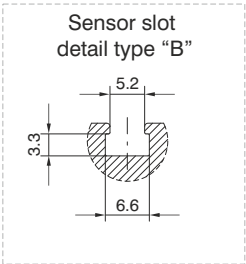

Bore		Ø20	Ø25	Ø32
A		25	30	38
AB		64	80	98
AD		53	64	76
AE		70	72	82
AF		94	96	112
B		23	28	36
BC		62	78	96
BD		12	12	16
BE		6	6	8
BF		50	60	75
BG		M4x0,7	M5x0,8	M5x0,8
	Useful depth	6	7,5	8
BL		11,5	14	18
C		10	12	16
D		30	30	30
DA		12,5	15	19
DB		M4x0,7	M5x0,8	M5x0,8
	Useful depth	6	7,5	7,5
DC		9,5	11	11
	depth	5,3	6,3	6,3
DE		5,5	6,9	6,9
DF		M6x1	M8x1,25	M8x1,25
	Useful depth	10	12	12
DG		7,75	8,5	9
DH		9,5	13	20
E		45	46	56
EA		8	9	10
EB		7,75	15	19
EC		M5x0,8	G1/8	G1/8
	Useful depth	4,5	6,5	6,5
F		M6x1	M6x1	M8x1,25
G		M5x0,8	M6x1	M6x1
L		28	35	44
LB		12	12	14
P		5,4	7,8	12
Z	stroke 10 - 25	30	30	40
	stroke 30 - 50	40	40	50
	stroke 60 - 100	60	60	70

	Bore				
	Ø10	Ø15	Ø20	Ø25	Ø32
Stroke	**Control unit with bronze bush**				**Weight (gr)**
10	150	250	400	610	1150
15	160	265	420	635	1190
20	170	280	440	660	1230
25	180	290	460	690	1275
30	190	300	480	720	1320
35	200	315	495	745	1360
40	210	330	510	770	1400
45	220	345	530	800	1450
50	230	360	550	830	1490
60	250	390	585	890	1580
70	270	420	620	950	1665
75	280	435	640	970	1710
80		450	660	995	1755
90		480	700	1060	1840
100		510	740	1000	1930
Stroke	**Control unit with bearing bush**				
10	160	270	430	620	1160
15	165	285	445	645	1205
20	170	300	460	670	1250
25	180	310	480	700	1295
30	190	320	500	730	1340
35	200	335	515	755	1380
40	210	350	530	780	1420
45	220	365	550	810	1465
50	230	380	570	840	1510
60	250	410	605	895	1595
70	270	440	640	955	1680
75	280	455	660	980	1720
80		470	680	1005	1765
90		500	715	1065	1855
100		530	750	1110	1940

Working pressure	**Theoretical slide force**									
1 bar	16	10	35.5	25	63	47	98	75.5	161	120.5
1.5 bar	23.5	15	53	38	94	62.5	147.5	113.5	241	181
2 bar	31.5	20.0	70.5	50.5	125.5	94	196.5	151	321.5	241
3 bar	47	30	106	75.5	188.5	141	294.5	227	482.5	362
4 bar	63	40	141	101	251	188	393	302.5	643	482.5
5 bar	78.5	50	176.5	126	314	236	491	378	804	603
6 bar	94	60	212	151	377	283	589	453.5	965	723.5
7 bar	110	70	247	176.5	440	330	687.5	529	1125.6	844
	Out	In	Out	In	Out	In	Out	In	Out	In

Possible loads

Control unit with bronze bush

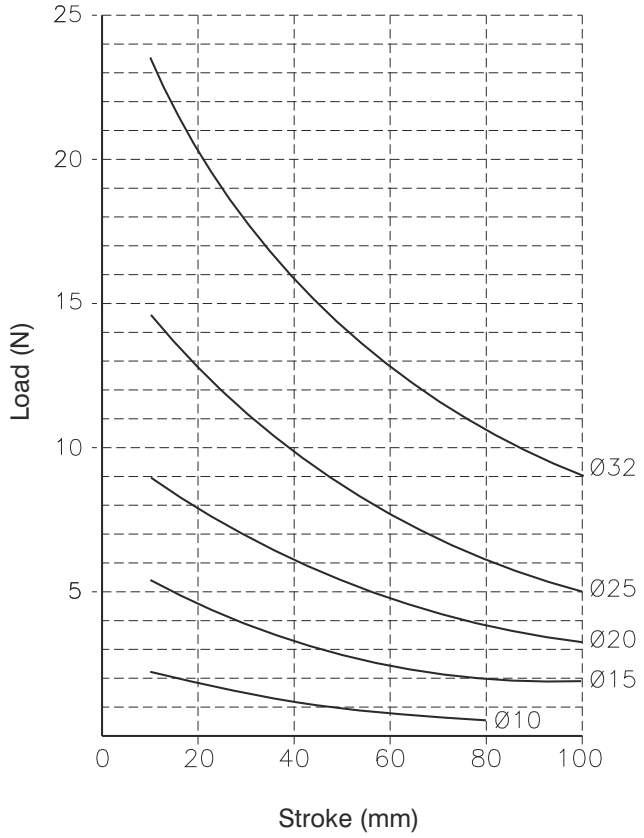

Control unit with bearing bush

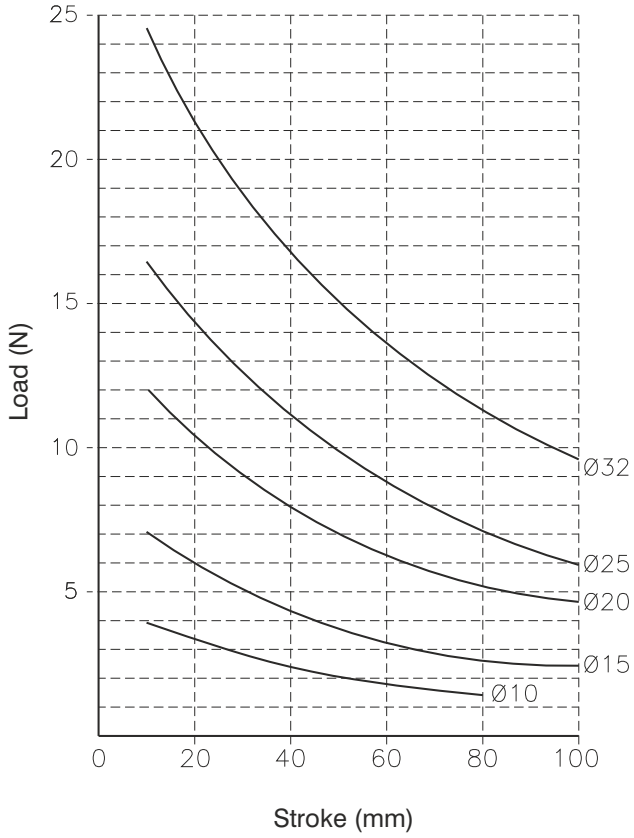

5

Ordering code

6210.Ø.stroke. _

- **10**
- **15**
- **25**

- **C** = Fixed body
- **P** = Fixed end plates

Construction characteristics

Body	anodised aluminium
Rods	stainless steel
Piston	aluminium
Piston rod bushing	brass
Piston seal	oil resistant NBR rubber
Piston rod seal	PUR
Plate	anodised aluminium

Technical characteristics

Function	double acting
Fluid	filtered and preferably lubricated air or not (If lubricated the lubrication must be continuous)
Max pressure	10 bar
Operating temperature	-5°C - +70°C
Cushioning	with decelerator (available on request)

Standard strokes

	Stroke							
Bore	**25**	**50**	**75**	**100**	**125**	**150**	**175**	**200**
Ø10	●	●	●	●				
Ø15	●	●	●	●	●	●	●	●
Ø25	●	●	●	●	●	●	●	●

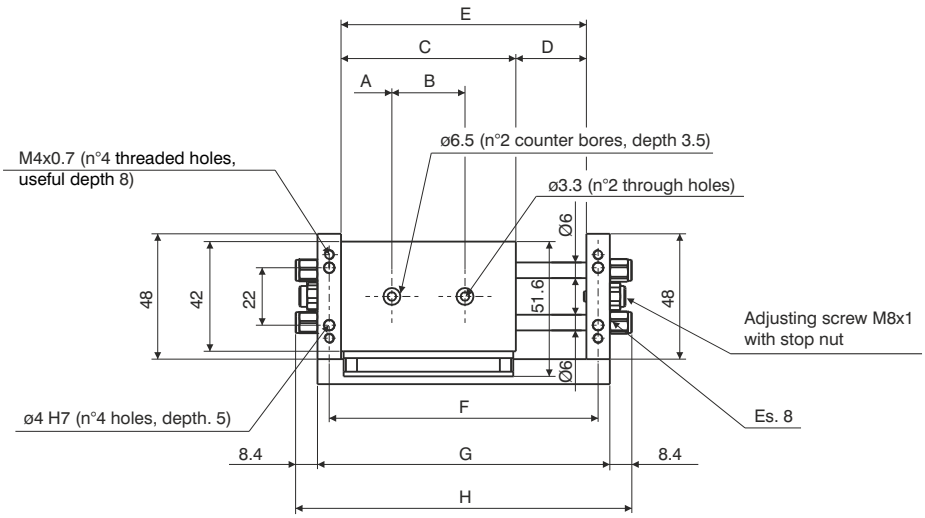

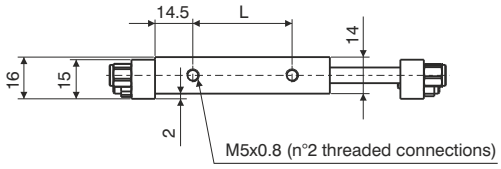

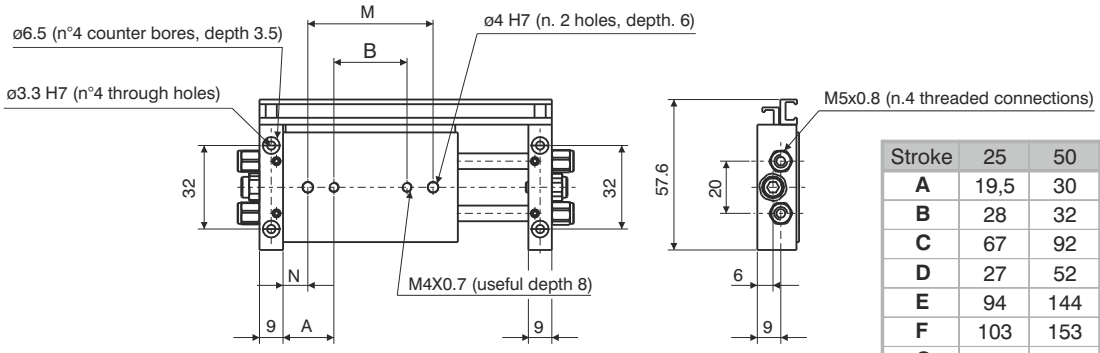

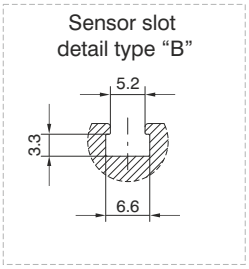

Stroke	25	50	75	100
A	19,5	30	35	35
B	28	32	47	72
C	67	92	117	142
D	27	52	77	102
E	94	144	194	244
F	103	153	203	253
G	112	162	212	262
H	129	179	229	279
L	38	63	88	113
M	48	52	67	92
N	9,5	20	25	25
				Weight
gr.	160	230	280	310

MOUNTING WITH FIXED PLATE

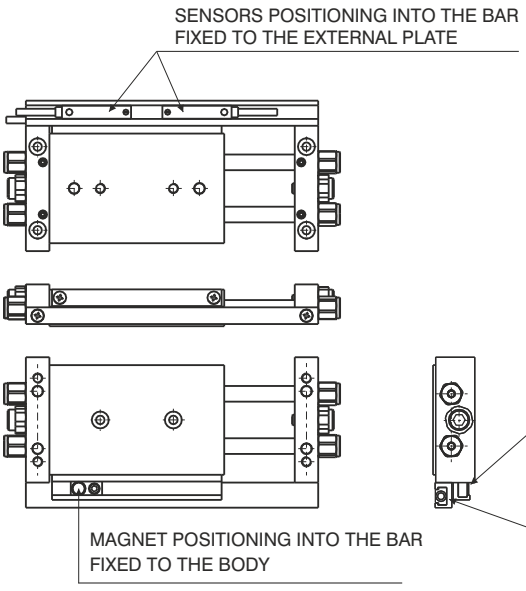

MOUNTING WITH A FIXED BODY

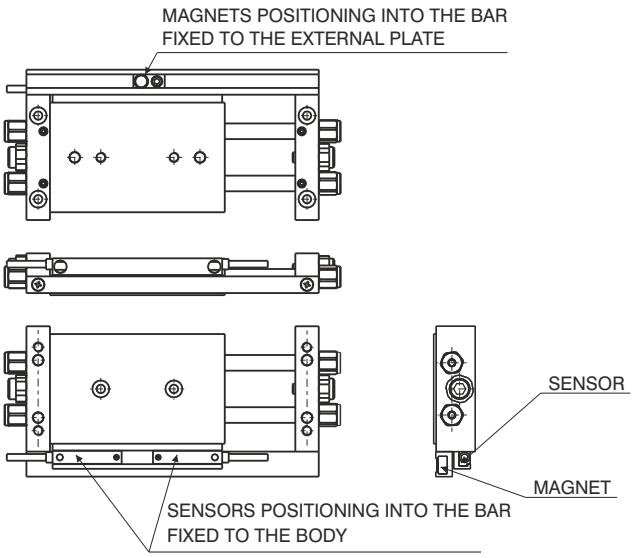

5

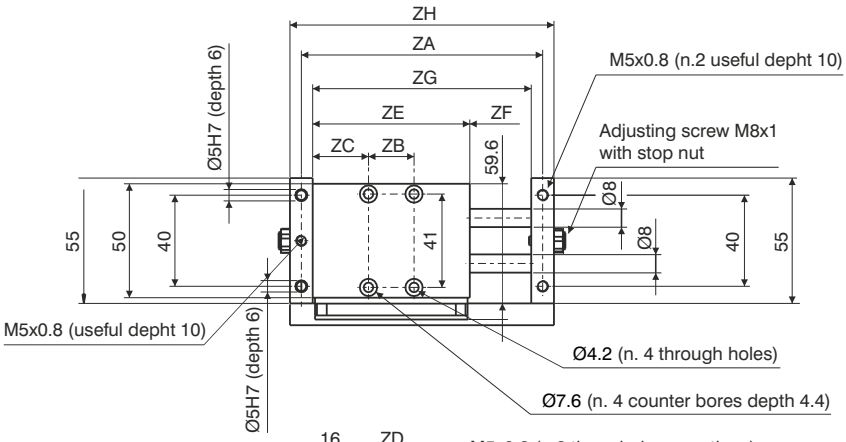

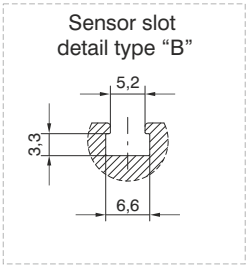

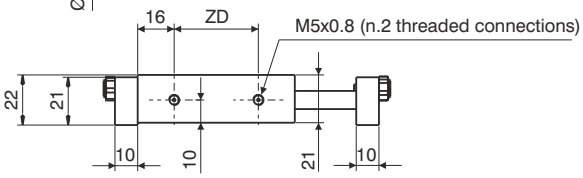

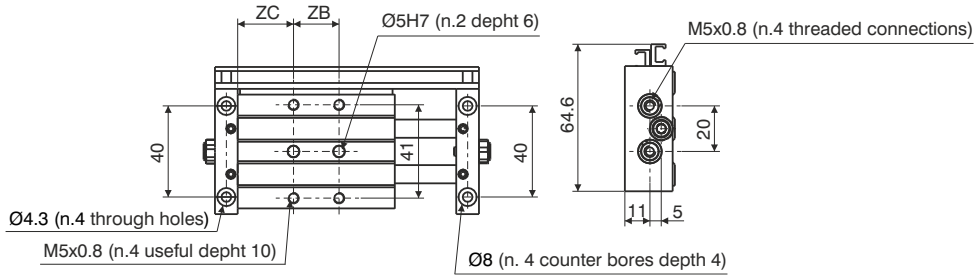

Stroke	25	50	75	100	125	150	175	200
ZA	106	156	206	256	306	356	406	456
ZB	20	45	65	90	90	90	90	90
ZC	24,5	24,5	27	27	39,5	52	64,5	77
ZD	37	62	87	112	137	162	187	212
ZE	69	94	119	144	169	194	219	244
ZF	27	52	77	102	127	152	177	202
ZG	96	146	196	246	296	346	396	446
ZH	116	166	216	266	316	366	416	466
								Weight
gr.	240	350	450	550	670	750	900	1000

MOUNTING WITH FIXED PLATE

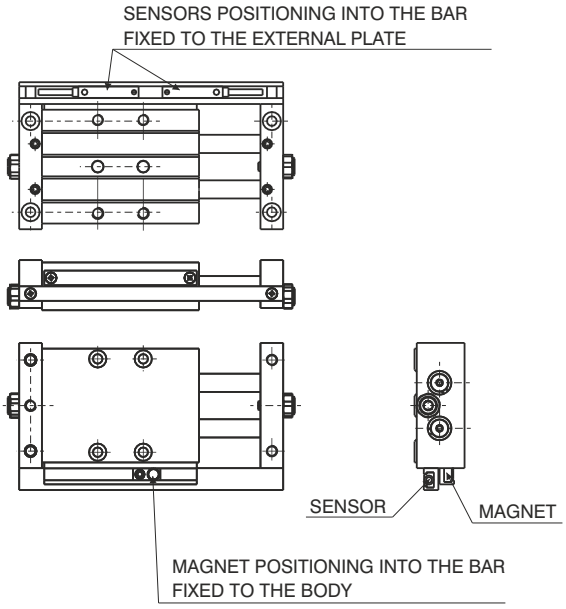

MOUNTING WITH FIXED BODY

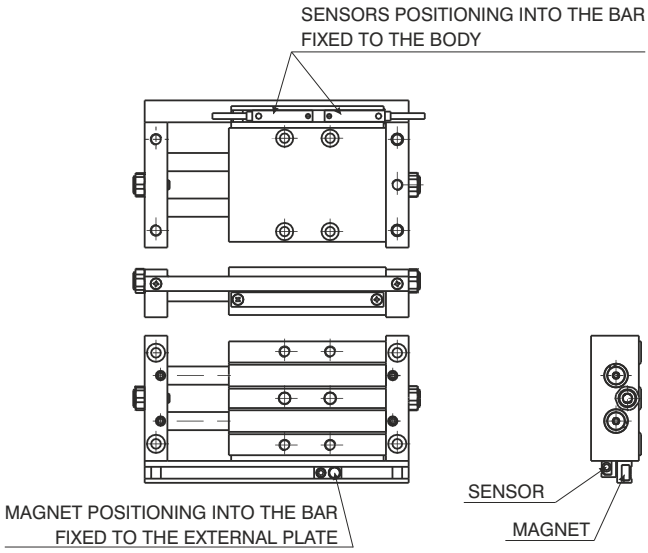

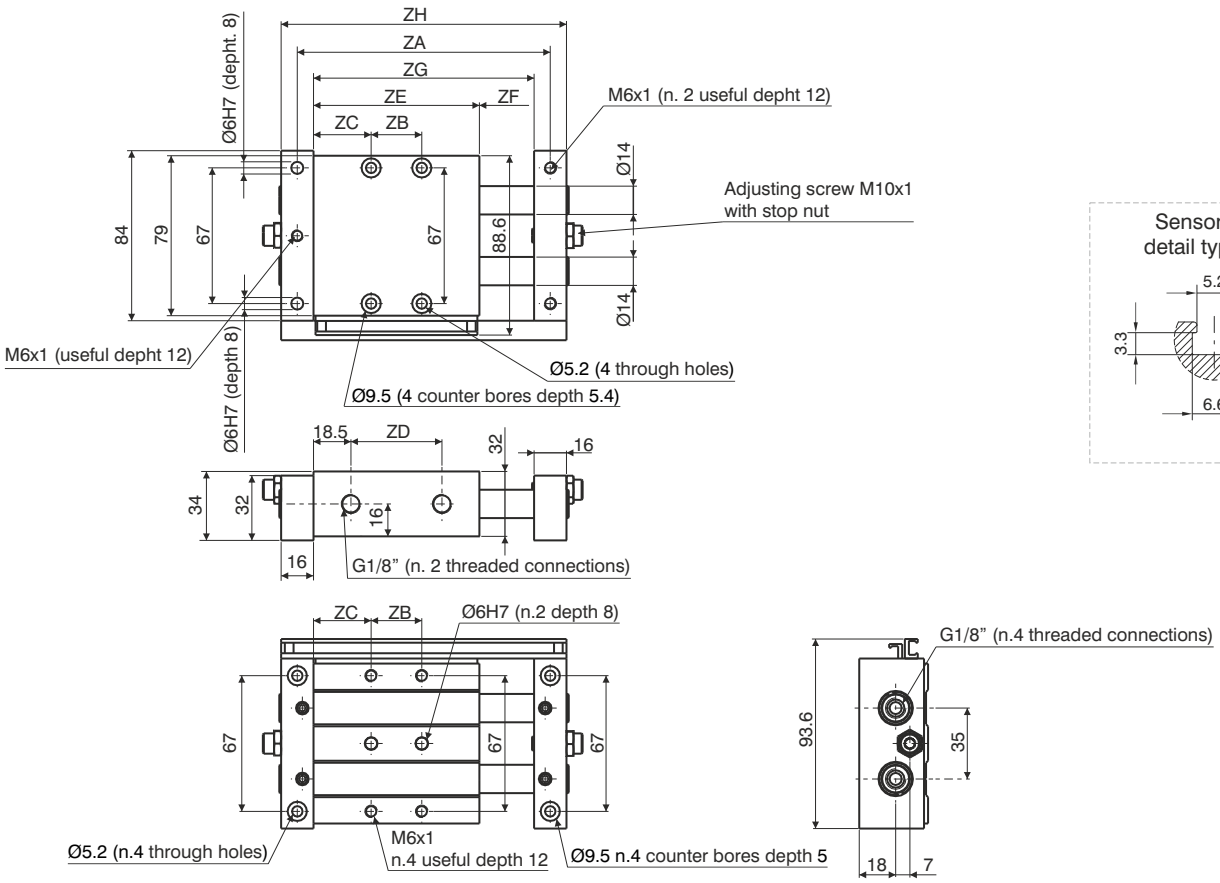

Stroke	25	50	75	100	125	150	175	200
ZA	125	175	225	275	325	375	425	475
ZB	25	45	65	90	90	90	90	90
ZC	28,5	31	33,5	33,5	46	58,5	71	83,5
ZD	45	70	95	120	145	170	195	220
ZE	82	107	132	157	182	207	232	257
ZF	27	52	77	102	127	152	177	202
ZG	109	159	209	259	309	359	409	459
ZH	141	191	241	291	341	391	441	491
								Weight
gr.	950	1140	1350	1600	1800	2000	2300	2500

MOUNTING WITH FIXED PLATE

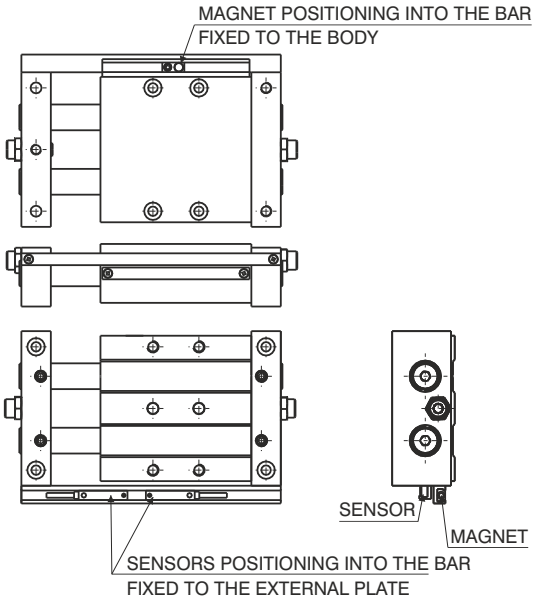

MOUNTING WITH FIXED BODY

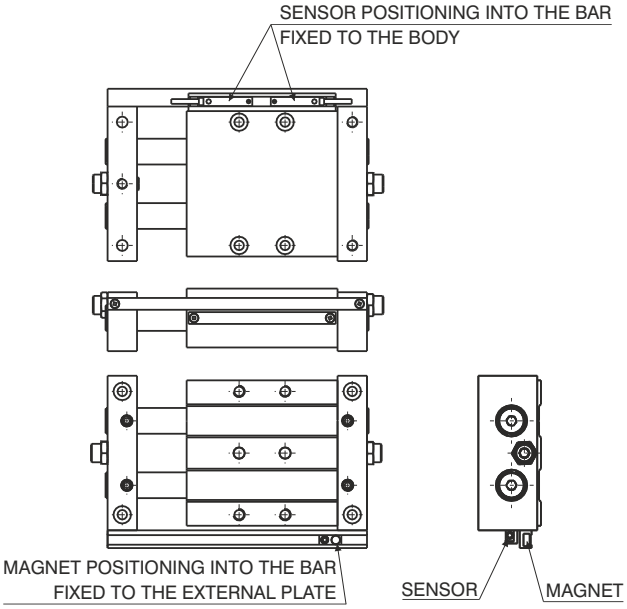

Theoretical force (N)

Working pressure	Bore		
	Ø10	Ø15	Ø25
2 bar	20	41	119
3 bar	30	62	179
4 bar	40	83	239
5 bar	51	104	299
6 bar	61	124	358
7 bar	71	145	418
8 bar	81	166	478
9 bar	91	186	537
	101	207	597
	Effective area (mm^2)		

Deflection of piston rods

Applied load to body centre

Bore	Load	Deflection (mm)	
Ø10	10 N	0,07	/
Ø15	30 N	0,08	0,28
Ø25	60 N	0,02	0,08
		100	200
		Stroke	

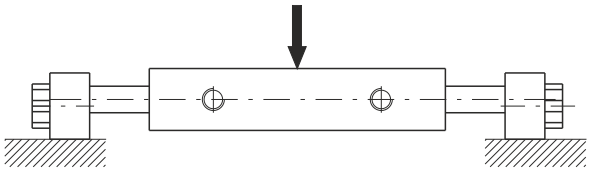

Applied load to body centre

Bore	Load	Deflection (mm)			
Ø10	3 N	0,06	0,3	/	/
Ø15	5 N	0,1	0,2	0,5	1
Ø25	10 N	0,03	0,1	0,15	0,25
		50	100	150	200
		Stroke			

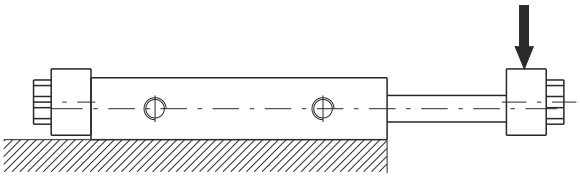

Control unit with bronze bushes

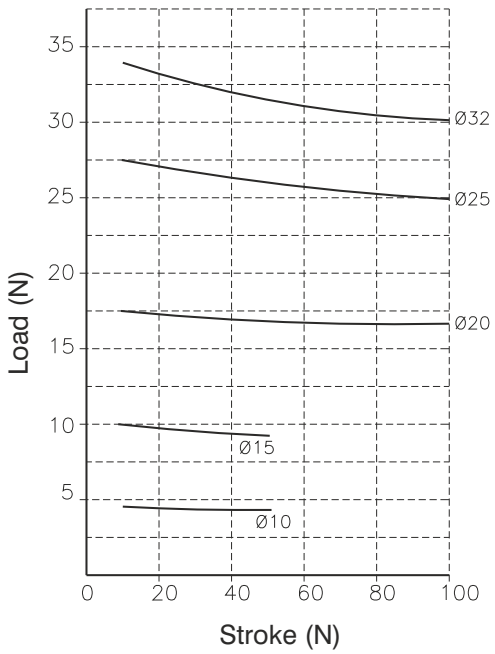

General

Pneumatic grippers from the 6300 series are typically used in complex systems such as assembly machines, robots, manipulators etc.
This series covers the wide range requirements of this sector, allowing a variety of applications.
The range includes grippers equipped with holding fingers operating from -10° to +30° degrees, with 180° degree opening, or a parallel guided gripper with great rigidity throughout the stroke.
The parallel grippers cater for larger openings (three different strokes for each diameter) with synchronised operation via a pinion-rack system with high strength thanks to a double piston mechanism.
For the typical application of supplying a piece upon to a machine tool, make provision for an automatic three-pronged movement carried along by a wedge mechanism, containing the elevated force dimensions.
The holding fingers can have a tolerance reference as a precise fixing device for the catching mechanism. Every type of “hand” offers different functional levels of performance at varying diameters and lengths, secondary to the application by the “fingers”.

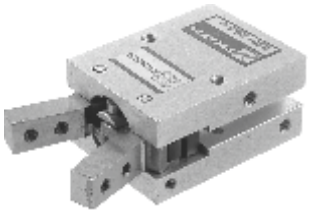

Ordering code

6301.Ø. _

- **10**
- **16**
- **20**
- **25**

- **D** = Double acting
- **S** = Single acting (N.O.)

Construction characteristics

Body	anodised aluminium
Piston	AISI 303 stainless steel
Fingers	nitrate steel
End cover	anodised aluminium
Seals	oil resistant NBR rubber

Technical characteristics

Fluid	filtered and preferably lubricated air or not (If lubricated the lubrication must be continuous)		
Working pressure	1 - 6 bar (double acting) - 2.5 - 6 bar (single acting)		
Operating temperature	-5°C - +70°C		
Opening total stroke	-10° - 30°		
Holding force (Nm) at 5 bar	Bore	Double acting	Single acting
	Ø10	0.1	0.07
	Ø16	0.4	0.30
	Ø20	0.7	0.55
	Ø25	1.35	1.08
Maximum operating frequency	from Ø10 to Ø25, 190 cycles/minute		

5

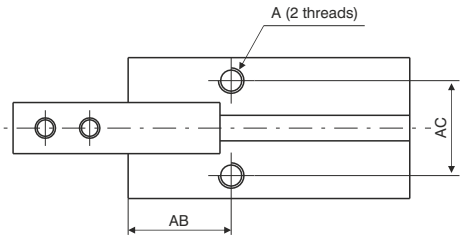

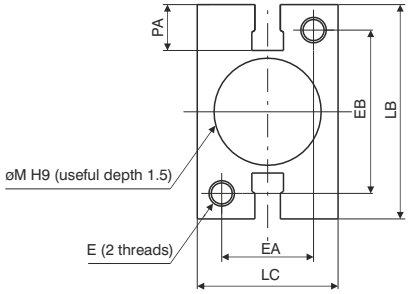

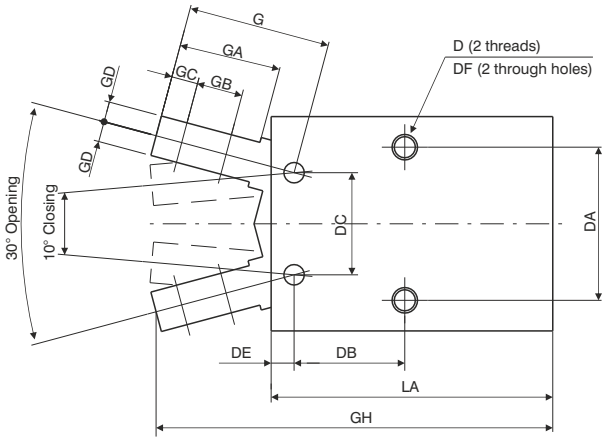

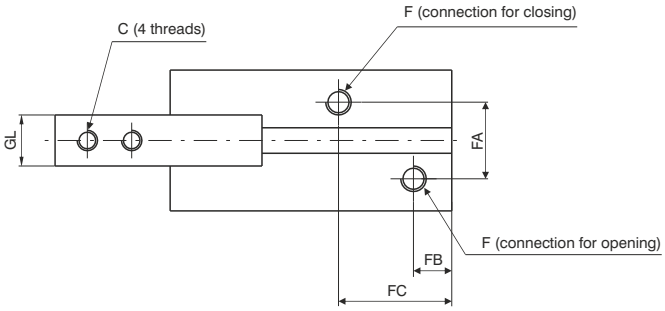

Bore		Ø10	Ø16	Ø20	Ø25
A		M3x0,5	M4x0,7	M5x0,8	M6
	Useful depht	6	6,5	8	10
AB		11,6	14,6	20,2	23,9
AC		11,4	16	18,6	22
C		M2,5x0,45	M3x0,5	M4x0,7	M5x0,8
D		M3x0,5	M4x0,7	M5x0,8	M6
	Useful depht	5	8	10	12
DA		16	24	30	36
DB		12,8	16,2	21,7	25,8
DC		10	16	20	25
DE		2,8	3,9	4,5	4,6
DF		2,6	3,4	4,3	5,1
E		M3x0,5	M4x0,7	M5x0,8	M6
	Useful depht	6	8	10	12
EA		12	15	18	22
EB		18	22	32	40
F		M3x0,5	M5x0,8	M5x0,8	M5x0,8
FA		11	13	15	20
FB		7,2	7	7,5	7,7
FC		18,8	18,3	22,2	23,5
G		17,2	22,6	28	37,5
GA		12	16	20	27
GB		5,7	7	9	12
GC		3	4	5,2	8
GD		2	3,5	4	5
GH		52,4	62,5	78,7	92
GL $^{0/-0,1}$		6,4	8	10	12
LA		38,6	44,6	55,2	60,4
LB		23	30,6	42	52
LC		16,4	23,6	27,6	33,6
M ^{H9}		11	17	21	26
PA		5,4	5,8	9	11,5
Weight (gr.)		40	90	180	315

Sensor slot
detail type “B”

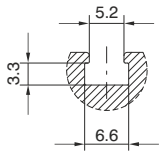

Gripping force 5 bar (Nm)

Bore	Ø10	Ø16	Ø20	Ø25
Double acting (Nm)	0,1	0,4	0,7	1,35
Single acting (Nm)	0,07	0,3	0,55	1,08

NOTE:
Bore selection should be made considering a holding force 10 to 20 times the component weight.
In case of acceleration/deceleration a further margin of safety should be considered.

	Double acting	Single acting
Ø10	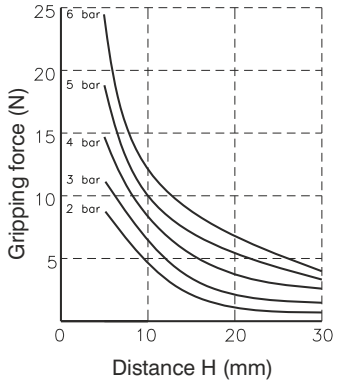	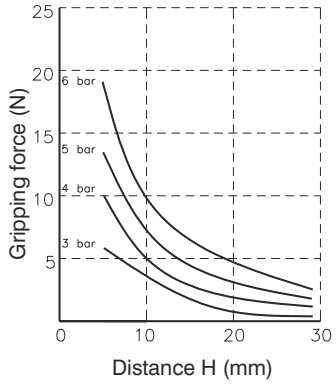
Ø16	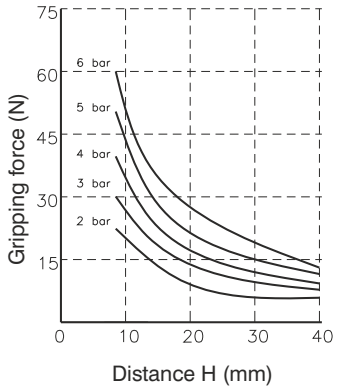	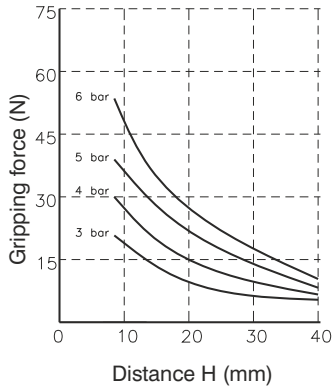
Ø20	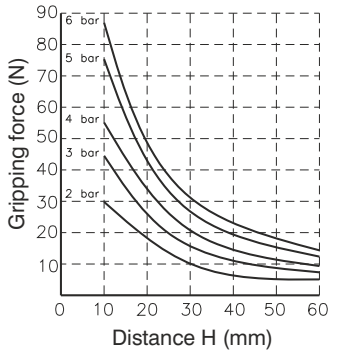	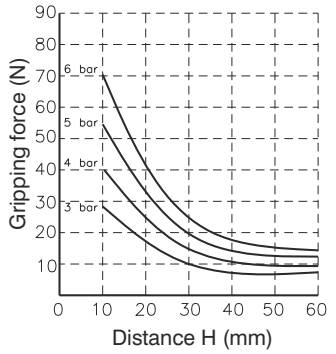
Ø25	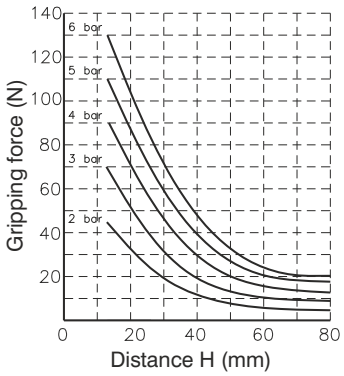	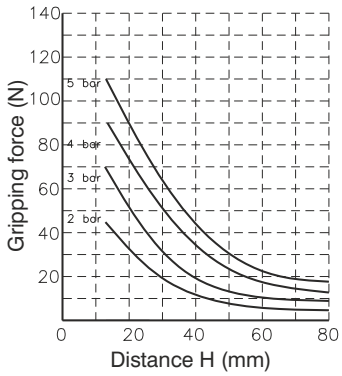

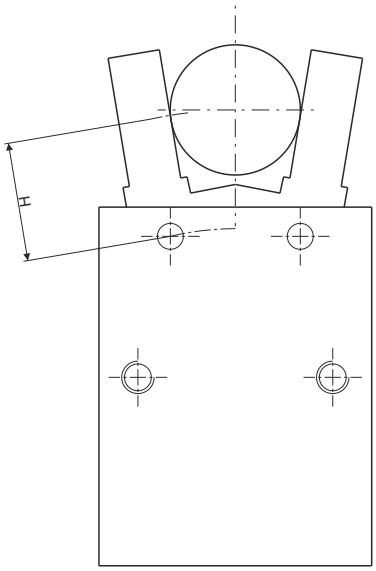

5

Ordering code

6302.Ø.D

- **10**
- **16**
- **20**
- **25**

Construction characteristics

Body	anodised aluminium
Piston	aluminium
Fingers	steel
End cover	anodised aluminium

Technical characteristics

Function	double acting
Fluid	filtered and preferably lubricated air or not (If lubricated the lubrication must be continuous)
Working pressure	1 - 6 bar
Working temperature	-5C° - +70C°
Opening total stroke	-3° - 180°
Maximum operating frequency	from Ø10 to Ø25, 60 cycles/minute

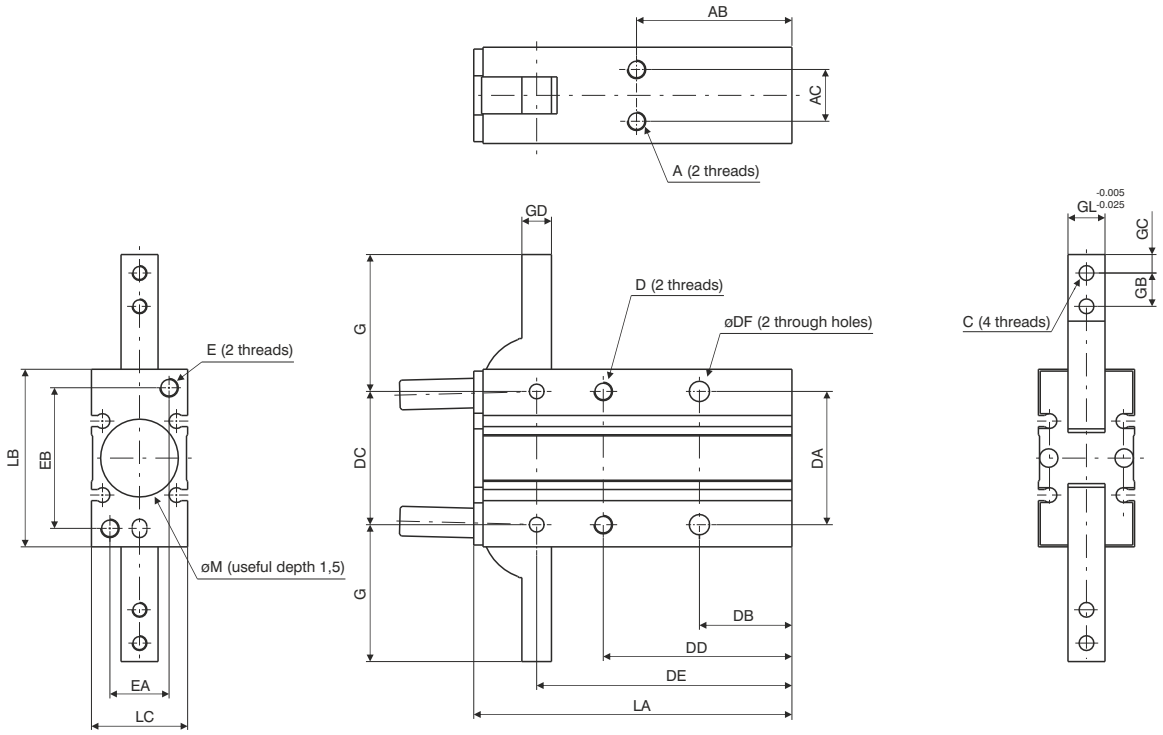

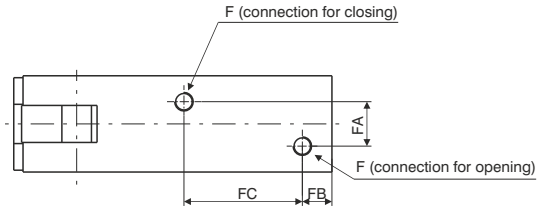

Bore		Ø10	Ø16	Ø20	Ø25
A		M3x0,5	M4x0,7	M5x0,8	M6x1
	Useful depth	4	5	8	10
AB		30	33	42	50
AC		9	12	14	16
C		M3x0,5	M3x0,5	M4x0,7	M5x0,8
D		M3x0,5	M4x0,7	M5x0,8	M6x1
	Useful depth	6	8	10	12
DA		24	30	36	42
DB		18	20	25	30
DC		22	28	36	45
DD		35	41	51	60
DE		47,5	55,5	69	86
DF		3,4	4,5	5,5	6,6
E		M3x0,5	M4x0,7	M5x0,8	M6x1
	Useful depth	6	8	10	12
EA		9	12	16	18
EB		24	30	38	46
F		M5x0,8	M5x0,8	M5x0,8	M5x0,8
FA		3	8	2	14
FB		7	7	8	8
FC		23	25	32	42
G		23,5	28,5	37	45
GB		6	7	9	12
GC		3	4	5	6
GD		4	5	8	10
GL		6	8	10	12
LA		58	69	86	107
LB		30	38	48	58
LC		15	20	26	30
N		4	4	5	5
	Useful depth	3	3	4	4
NA		9	15	19	23
ØM^{H9}		11	17	21	26
ØNB^{H9}		3	3	4	4
P		2	2,5	3	3
PA		13	18	20	24
Weight (gr.)		70	150	320	550

Sensor slot detail type “C”

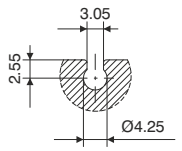

Back view detail

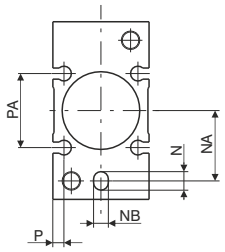

Gripping force 5 bar (Nm)

Bore	Ø10	Ø16	Ø20	Ø25
(Nm)	0,16	0,54	1,1	2,28

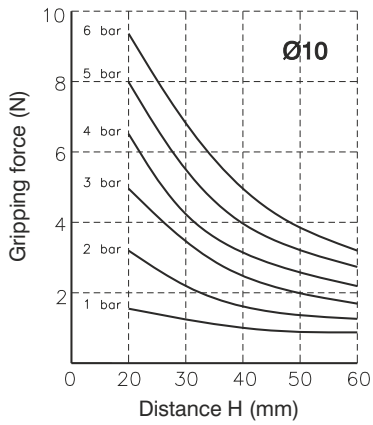

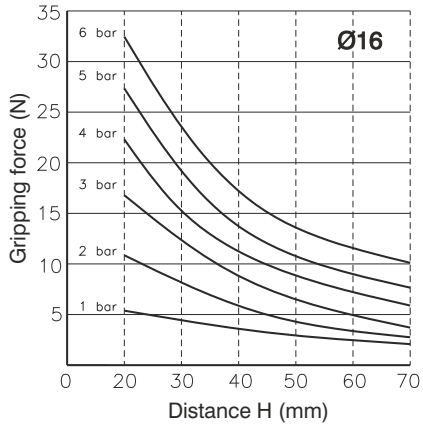

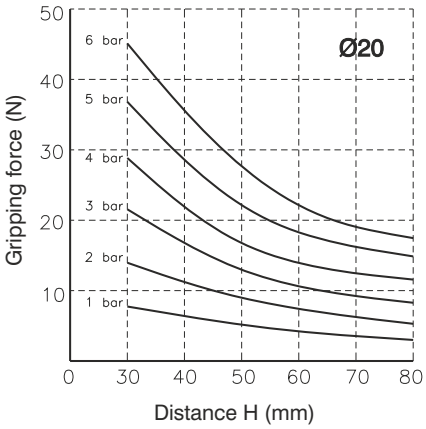

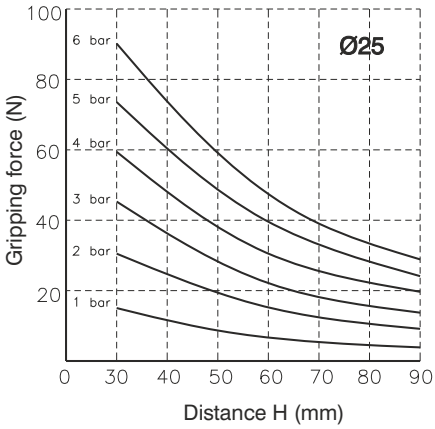

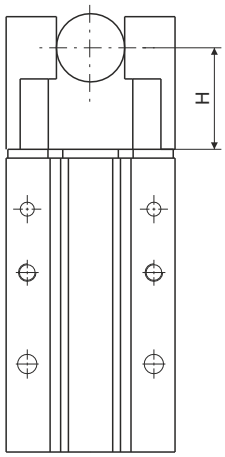

Confirmation of Holding point

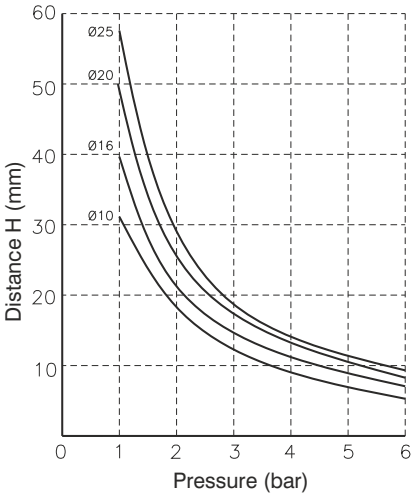

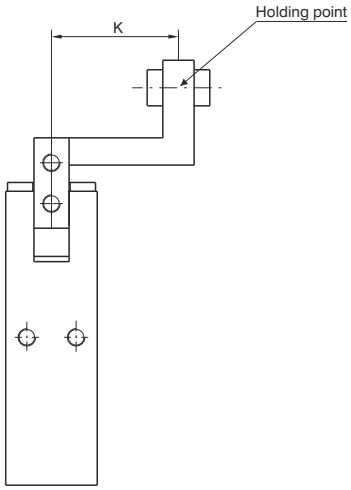

Applications where the holding point is outside the recommended parameters shown on the above graph might affect the product life.

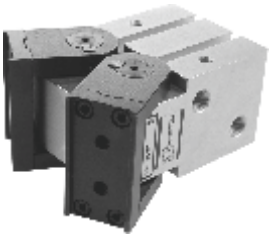

Ordering code

6303.Ø.D_

- **F** = Fingers, end fixing
- **L** = Fingers, side fixing

- **20**
- **25**
- **32**
- **40**
- **50**

Construction characteristics

Body	anodised aluminium
Piston	aluminium
Fingers	steel
End cover	anodised aluminium

Technical characteristics

Function	double acting
Fluid	filtered and preferably lubricated air or not (If lubricated the lubrication must be continuous)
Working pressure	1.5 - 7 bar
Working temperature	-5C° - +70C°
Opening total stroke	-5° - 180°
Maximum operating frequency	from Ø20 to Ø25, 60 cycles/minute from Ø32 to Ø50, 30 cycles/minute

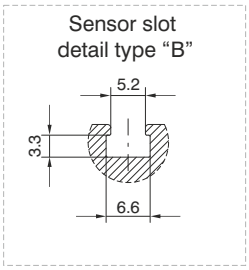

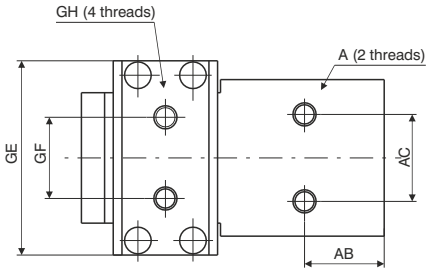

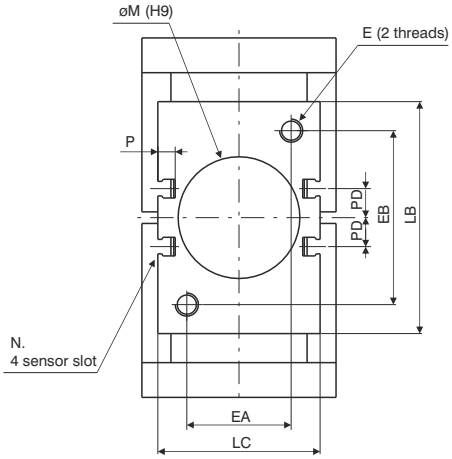

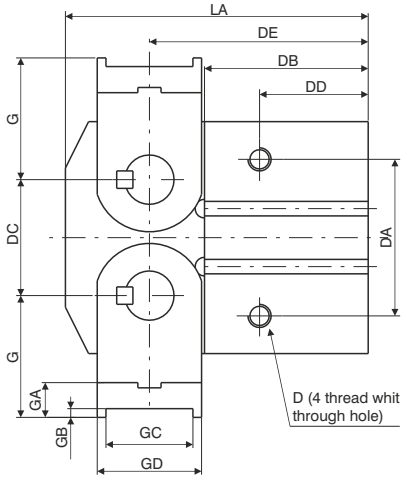

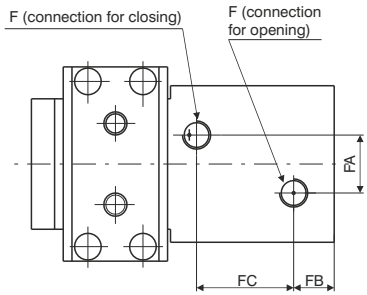

Bore		Ø20	Ø25	Ø32	Ø40	Ø50
A		M5	M6	M6	M8	M10
	Useful depth	7	10	10	15	20
AB		17	20	21	27,5	36
AC		20	24	24	30	40
D		M5	M6	M6	M8	M10
	Useful depth	10	12	12	16	20
DA		27	34	42	54	70
DB		35	40	47	56,5	69
DC		18	24	30	40	56
DD		23	27	29	37,5	48
DE		45	51	61,5	75,5	96
E		M5	M6	M6	M8	M10
	Useful depth	10	12	12	15	20
EA		26	30	30	36	40
EB		26	30	45	60	80
F		M5	M5	G1/8	G1/8	G1/4
FA		12	16	20	20	30
FB		9	10	13	14	16
FC		20	23	25	33,5	44
G		23	27	32	42	58
GA		7	8	9	12	17
GB		2	2	2	3	4
GC		12	17	23	30	44
GD		16	21	27	36	52
GE		41	45	51	67	85
GF		18	20	20	28	38
GH		M4	M5	M6	M8	M10
H		5	6	7	9	13
HA		10	12	14	21	24
HB		5	6	7	10	13
HC		28	30	34	44	58
HD		14	16	18	24	30
LA		60	69	83,5	104,5	136
LB		36	45	58	80	112
LC		36	40	45	56	66
ØM^{H9}		21	26	34	42	52
	Useful depth	3	3	4	4	5
P		6	5,5	5,5	6	6
PD		4	4,5	11	10	13
Weight (gr.)		300	500	900	2100	5000

Fingers side fixing

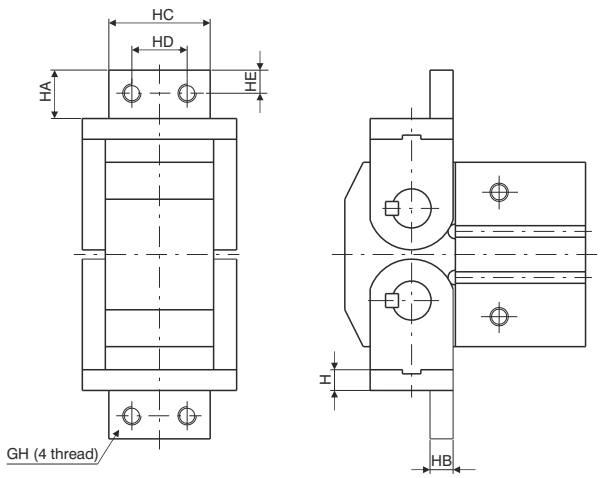

Gripping force

NOTE:
Bore selection should be made considering a holding force 10 to 20 times the component weight.
In case of acceleration/deceleration a further margin of safety should be considered.

Bore	Ø20	Ø25	Ø32	Ø40	Ø50
(Nm)	0,3	0,7	1,6	3,7	8,3

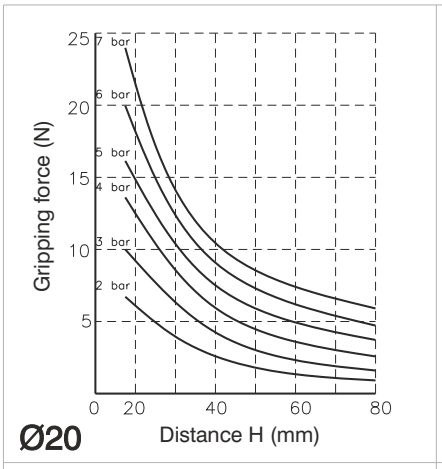

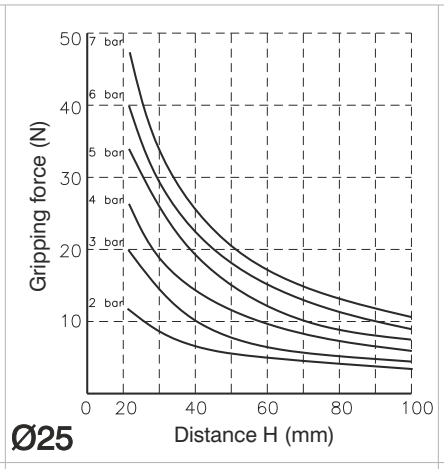

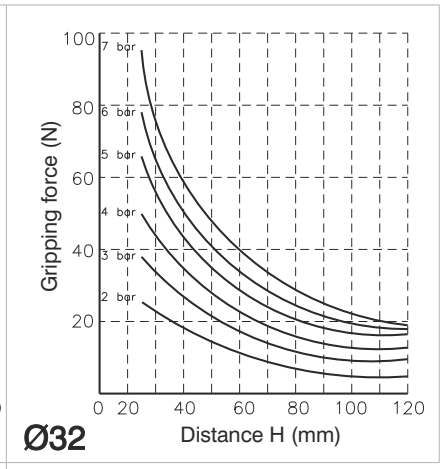

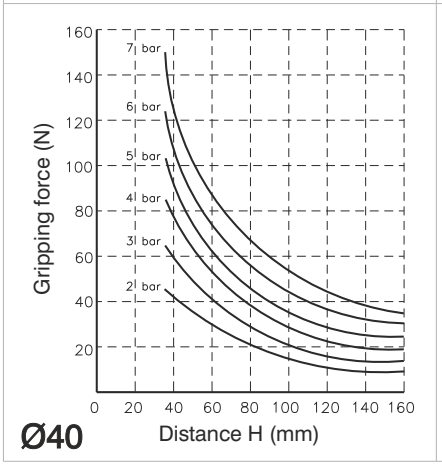

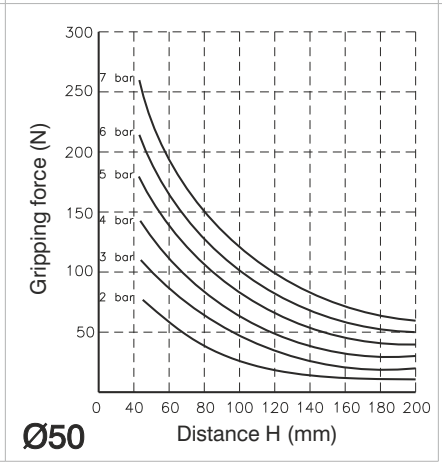

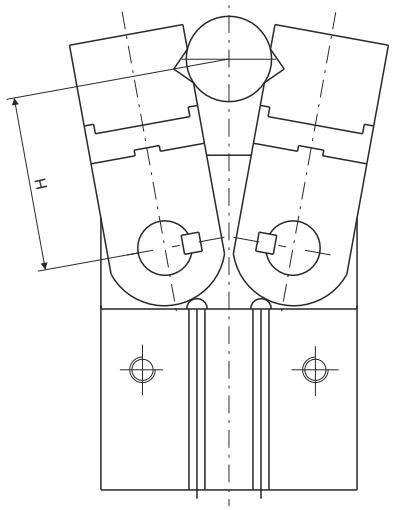

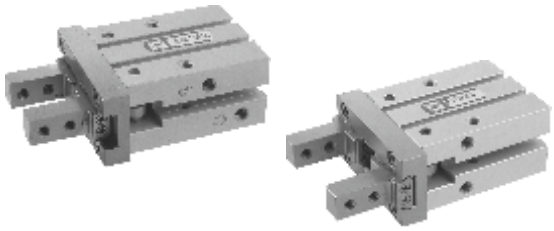

Ordering code

6310.Ø __

- **10**
- **16**
- **20**
- **25**

- **D** = Double acting
- **NC** = Single acting (N.C.)
- **NO** = Single acting (N.O.)

Construction characteristics

Body	anodised aluminium
Piston	aluminium or stainless steel (depending on the bore)
Fingers	steel
End cover	anodised aluminium
Seals	oil resistant NBR rubber

Technical characteristics

Fluid	filtered and preferably lubricated air or not (If lubricated the lubrication must be continuous)
Working pressure	double acting : 2 - 7 bar (for ø10) - 1 - 7 (for other bores) single acting : 3.5 - 7 bar (for ø10) - 2.5 - 7 (for other bores)
Operating temperature	-5°C -+70°C
Maximum operating frequency	from Ø10 to Ø25, 180 cycles/minute

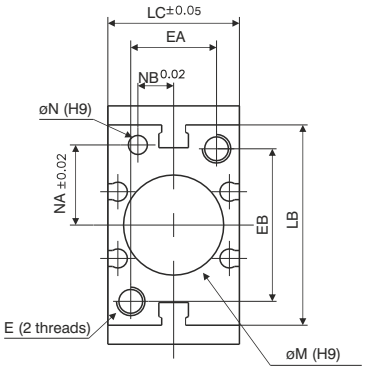

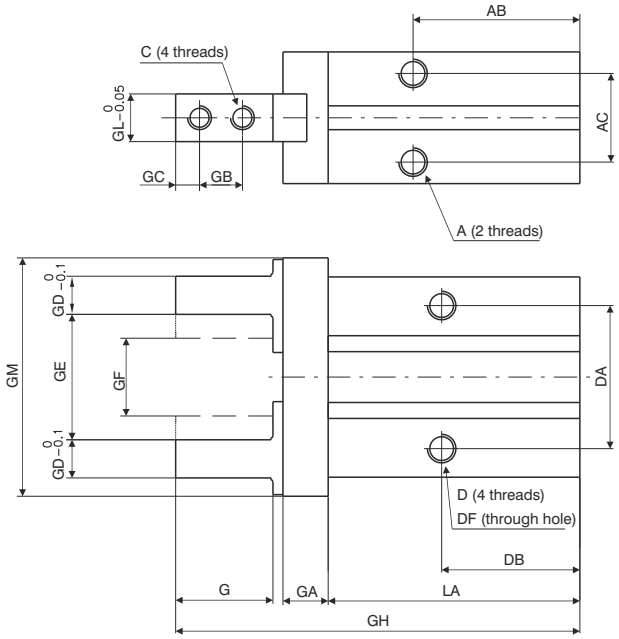

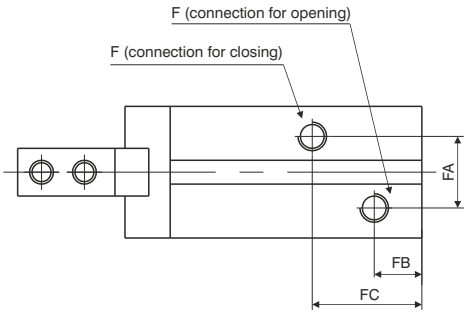

Bore		Ø10	Ø16	Ø20	Ø25
A		M3x0,5	M4x0,7	M5x0,8	M6x1
	Useful depth	6	4,5	8	10
AB		27	30	35	36,5
AC		11,4	16	18,6	22
C		M2,5x0,45	M3x0,5	M4x0,7	M5x0,8
D		M3x0,5	M4x0,7	M5x0,8	M6x1
	Useful depth	5,5	8	10	12
DA		16	24	30	36
DB		23	24,5	29	30
ØDF		2,6	3,4	4,3	5,1
E		M3x0,5	M4x0,7	M5x0,8	M6x1
	Useful depth	6	8	10	12
EA		12	15	18	22
EB		18	22	32	40
F		M3x0,5	M5x0,8	M5x0,8	M5x0,8
FA		11	13	15	20
FB		9	7,5	10	10,7
FC		19	19	23	23,5
G		12	15,5	20	25
GA		6	7,5	9,5	11
GB		5,7	7	9	12
GC		3	4	5	6
GD		4	5	8	10
GE		15,2	20,9	26,3	33,3
GF		11,2	14,9	16,3	19,3
GH		57	67,5	84,8	102,7
GL		5	8	10	12
GM		29	38	50	63
LA		37,8	42,5	52,8	63,6
LB		23	30,6	42	52
LC		16,4	23,6	27,6	33,6
ØM^{H9}		11	17	21	26
	Useful depth	2	2	3	3,5
ØN^{H9}		2	3	4	4
	Useful depth	3	3	4	4
NA		7,6	11	16,8	21,8
NB		5,2	6,5	7,5	10
P		5,4	5,8	9	11,5
PA		/	11,6	14	19
PP		/	2,1	2,1	3,5
Weight (gr.)		55	120	230	425

Sensor slot detail

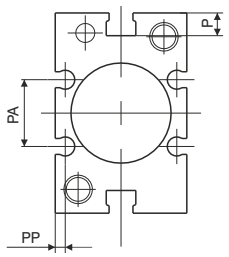

Ø16 - Ø25

Sensor slot detail type “C”

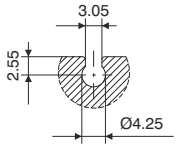

Ø10 - Ø25

Sensor slot detail type “B”

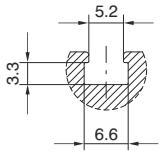

Holding force (N) (pressure 5 bar, holding point H=20 half stroke)

Version		Force	Bore Ø10	Ø16	Ø20	Ø25
Double acting		Fe	9,8	30	42	65
		Fi	17	40	66	104
Single acting	N.O.	Fe	6,3	24	28	45
	N.C.	Fi	12	31	56	83

Fe =external holding force **Fi** = internal holding force

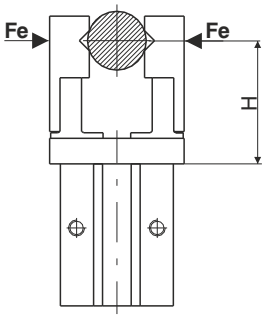

EXTERNAL HOLD

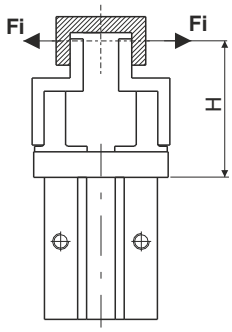

INTERNAL HOLD

	Double acting		Single acting	
	External hold Force	Internal hold Force	External hold Force	Internal hold Force
Ø10	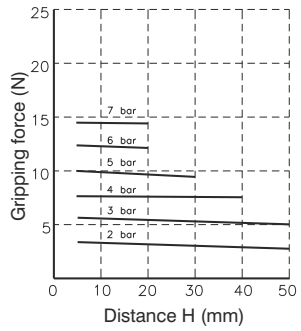	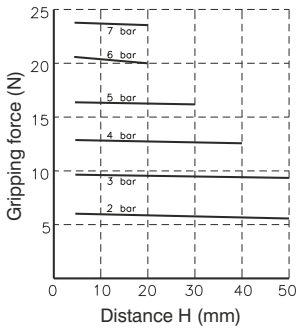	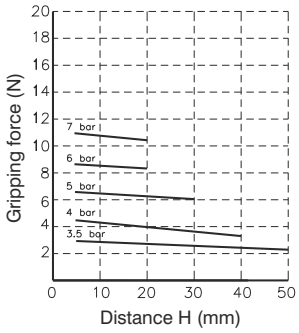	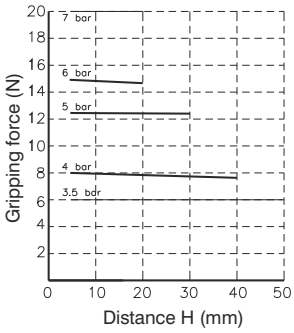
Ø16	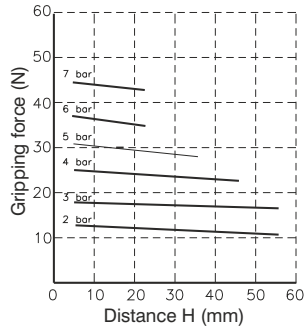	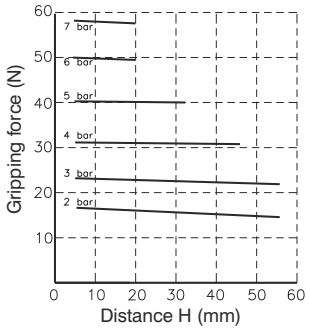	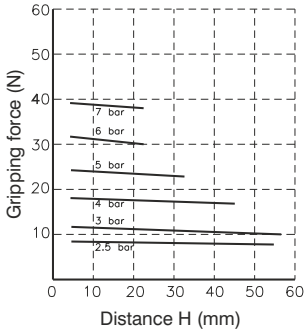	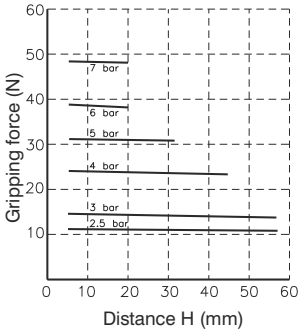
Ø20	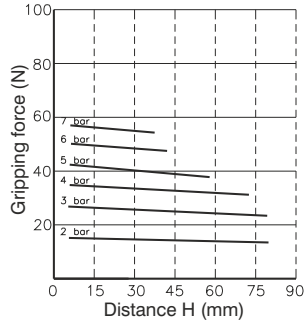	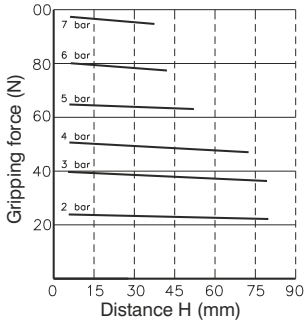	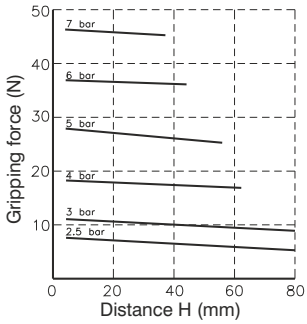	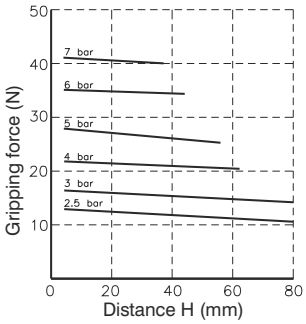
Ø25	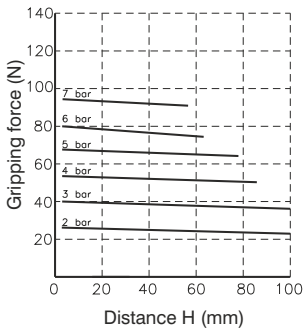	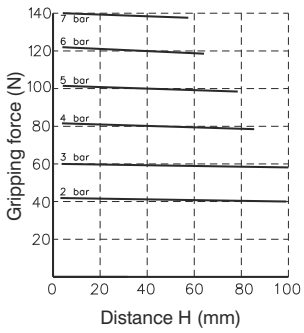	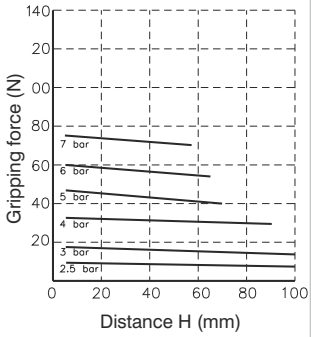	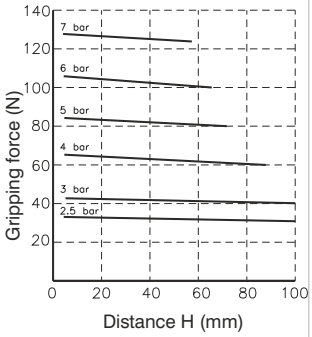

Ordering Code

6311.Ø.D. __

- **10**
- **16**
- **20**
- **25**
- **32**
- **40**

Ordering code options	Stroke					
	20	30	40	50	70	100
1	40	60	80	100	120	160
2	60	80	100	120	160	200
	Ø10	**Ø16**	**Ø20**	**Ø25**	**Ø32**	**Ø40**
	Bore					

Construction characteristics

Body	anodised aluminium
Piston	aluminium
Fingers	anodised aluminium
Rod	steel
Rack	steel
Pinion	steel

Technical characteristics

Function	double acting
Fluid	filtered and preferably lubricated air or not (If lubricated the lubrication must be continuous)
Working pressure	Ø10: 1.5 - 6 bar - Ø16 - 40: 1 - 6 bar
Working temperature	-5°C - +70°C

Model	Diameter (mm)	Max.operating frequence cicles/min.	Model	Diameter (mm)	Max.operating frequence cicles/min.
6311.10.D	10	60	6311.25.D	25	60
6311.10.D.1		40	6311.25.D.1		40
6311.10.D.2			6311.25.D.2		
6311.16.D	16	60	6311.32.D	32	30
6311.16.D.1		40	6311.32.D.1		20
6311.16.D.2			6311.32.D.2		
6311.20.D	20	60	6311.40.D	40	30
6311.20.D.1		40	6311.40.D.1		20
6311.20.D.2			6311.40.D.2		

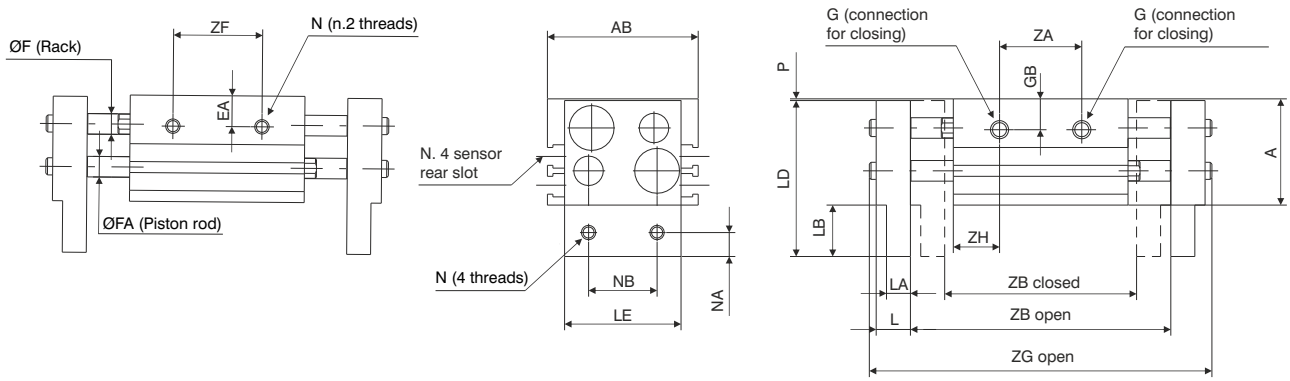

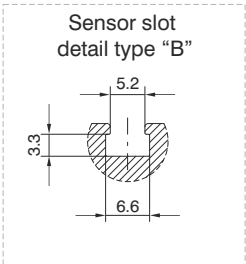

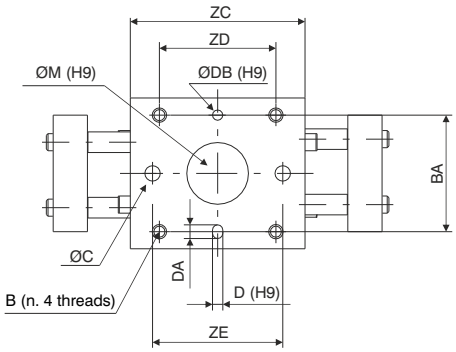

Bore		Ø10			Ø16			Ø20			Ø25			Ø32			Ø40		
A		31			39			46			52			68			79		
AB		44			55			65			76			82			98		
B		M4x0,7			M5x0,8			M6x1			M8x1.25			M8x1.25			M10x1.5		
	Useful depth	8			10			12			16			16			20		
BA		34			42			52			62			64			76		
ØC		4,5			5,5			6,6			9			/			/		
D H9		3			3			4			4			6			6		
	Useful depth	3			3			4			4,5			8			8		
DA		4			4			5			5			7			7		
ØDB H9		3			3			4			4			6			6		
	Useful depth	3			3			4			4,5			8			8		
E		M4x0,7			M5x0,8			M6x1			M8x1.25			M8x1.25			M10x1.5		
	Useful depth	5			7			7			7			11			16		
EA		9			10			11			12,5			22			28		
ØF		6			8			10			12			14			16		
FA		6			8			10			12			16			20		
G		M5x0,8			M5x0,8			M5x0,8			M5x0,8			G1/8			G1/8		
GB		9			10			11			16			16			18		
L		10			13			17			21			24			28		
LA		7			9			12,5			14			15			18		
LB		15			19			24			29			32			38		
LD		45,5			57,5			69			80			100			117		
LE		34			43			54			64			70			86		
ØM H9		18			23			27			32			35			40		
	Useful depth	1,5			1,5			1,5			1,5			1,5			1,5		
N		M4x0,7			M5x0,8			M6x1			M8x1,25			M10x1,5			M10x1,5		
NA		7			8			10			12			15			18		
NB		20			25			30			40			50			60		
P		0,5			0,5			1			1			1			1		
ZA		24	39	57	26	50	70	32	68	88	38	86	104	54	104	148	72	130	170
ZB	closed	56	78	96	68	110	130	82	142	162	100	182	200	150	198	242	188	246	286
	open	76	118	156	98	170	210	122	222	262	150	282	320	220	318	402	288	406	486
ZC		51	67	85	60	90	110	71	113	133	88	142	160	110	158	202	148	206	246
ZD		36	52	70	45	75	95	58	100	120	70	124	142	86	134	178	116	174	214
ZE		38	54	72	40	70	90	54	96	116	66	120	138	/	/	/	/	/	/
ZF		26	42	60	28	58	78	38	80	100	48	102	120	60	108	152	80	138	178
ZG	open	100	142	180	128	200	240	160	260	300	196	328	366	272	370	454	348	466	546
ZH		13,5	14	14	17	20	20	19,5	22,5	22,5	25	28	28	28	27		38		
Weight (gr.)		280	350	430	600	800	950	1000	1500	1700	1700	2500	2800	2900	3800	4700	5300	6850	7900
		20	40	60	30	60	80	40	80	100	50	100	120	70	120	160	100	160	200
		Stroke																	

5

Holding force

	Opening / Closing Stroke			Opening / Closing Stroke	
	Basic Version	Versions 1 & 2		Basic Version	Versions 1 & 2
Ø10	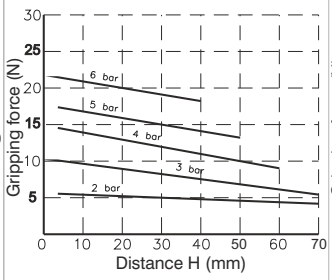	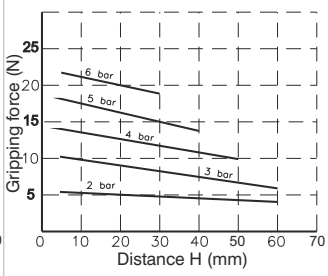	Ø16	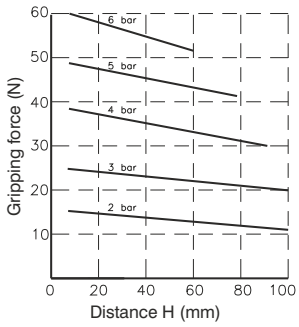	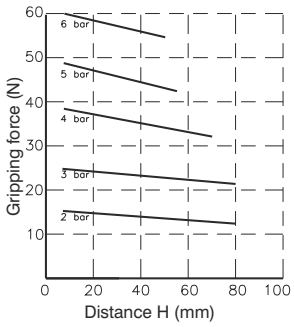
Ø20	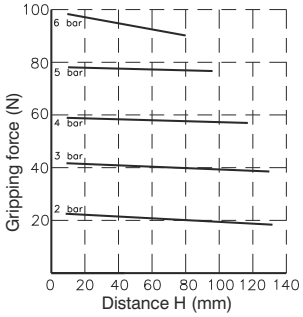	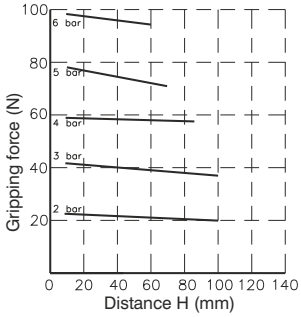	Ø25	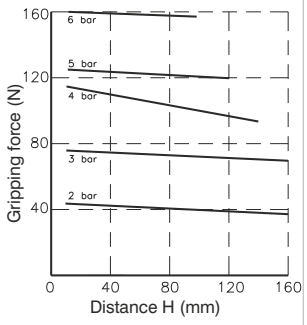	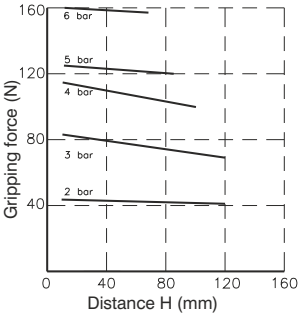
Ø32	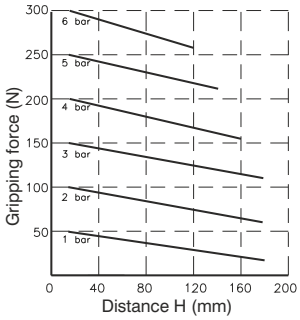	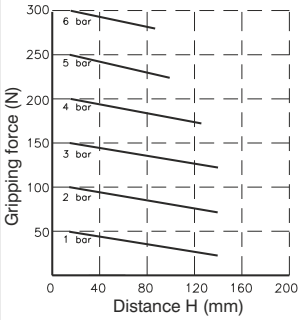	Ø40	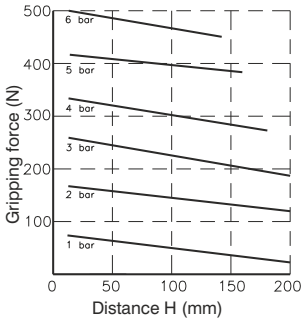	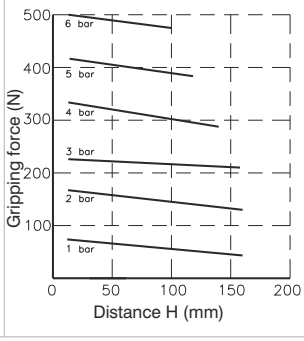

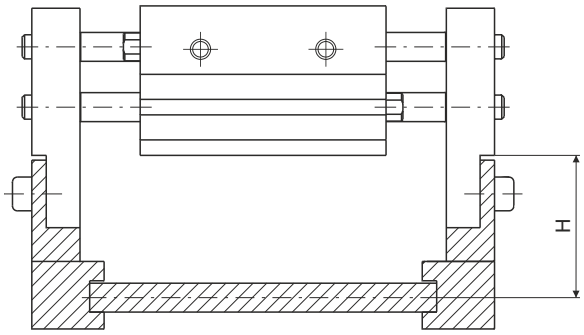

Ordering code

6312.Ø.D

- **16**
- **20**
- **25**
- **32**
- **40**
- **50**
- **63**
- **80**
- **100**
- **125**

Construction characteristics

Body	aluminium
Piston	aluminium
Wedge	steel
Fingers	steel

Technical characteristics

Function	double acting
Fluid	filtered and preferably lubricated air or not (If lubricated the lubrication must be continuous)
Working pressure	2 - 6 bar (Ø16 - Ø20 - Ø25) - 1 - 6 bar (Ø32 - Ø125)
Working temperature	-5°C - +70°C
Maximum operating frequency	from Ø 16 to Ø 25, 120 cycles/minute from Ø 32 to Ø 63, 60 cycles/minute from Ø 80 to Ø 125, 30 cycles/minute

Overall dimensions Ø16 - Ø25

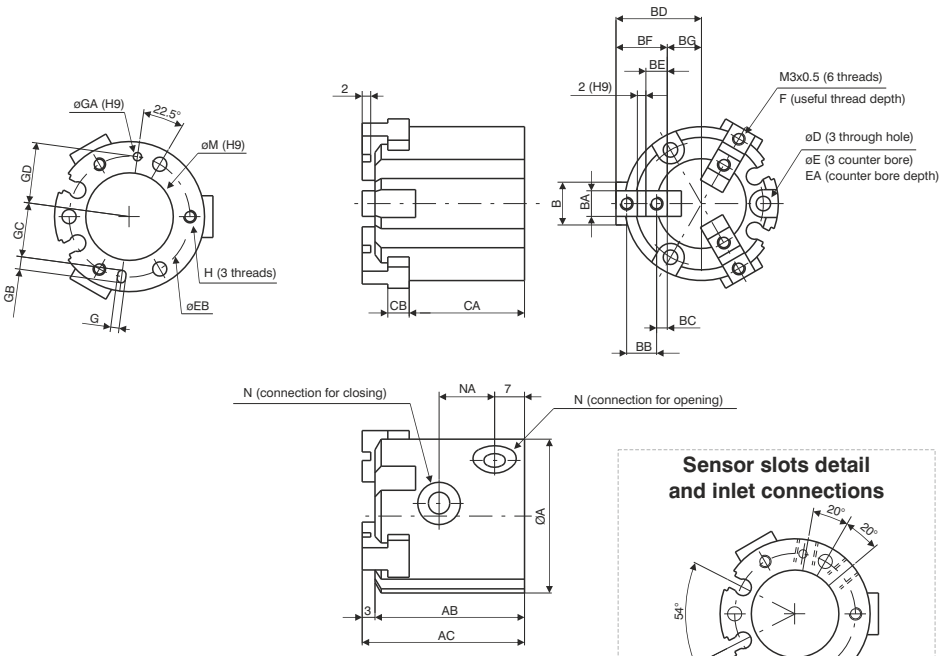

Bore		Ø16	Ø20	Ø25
ØA		30	36	42
AB		32	35	37
AC		35	38	40
B		8	10	12
BA h9		5	6	6
BB		6	7	8
BC		2	2,5	3
BD	open	17	20	24
	close	15	18	21
BE		4	5	6
BF		10	12	14
BG	open	7	8	10
	close	5	6	7
CA		25	27	28
CB		4	5	5
D		3,4	3,4	4,5
E		6,5	6,5	8
EA		8	9,5	10
EB		25	29	34
F		5	6	6
G H9		2	2	3
	Useful depth	2	2	3
ØGA H9		2	2	3
	Useful depth	2	2	3
GB		3	3	5
GC		11	13	14,5
GD		12,5	14,5	17
H		M3x0,5	M3x0,5	M4x0,7
	Useful depth	4,5	6	6
ØM H9		17	21	26
	Useful depth	1,5	1,5	1,5
N		M3x0,5	M5x0,8	M5x0,8
NA		11	13	15
Weight (gr.)		62	98	139

Sensor slot
detail type "C"

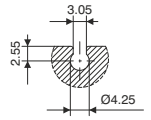

5

Overall dimensions Ø32 and Ø80

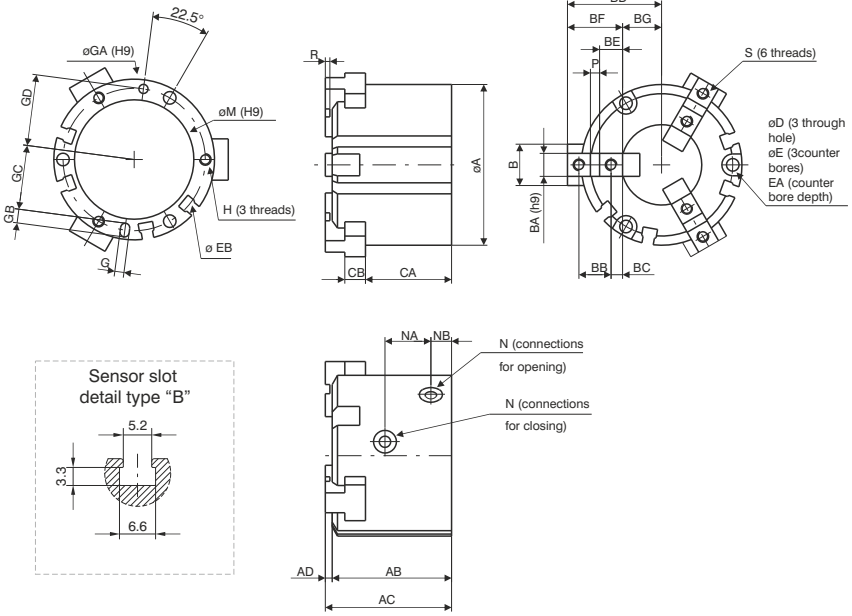

Bore		Ø32	Ø40	Ø50	Ø63	Ø80
ØA		52	62	70	86	106
AB		41	44	52	62	77
AC		44	47	55	66	82
AD		3	3	3	4	5
B		14	16	18	24	28
BA h9		8	8	10	12	14
BB		11	12	14	17	20
BC		4,5	4,5	5	5,5	6
BD	open	32	35	41	51	63,5
	close	28	31	35	43	53,5
BE		9	9	10	11	12
BF		20	21	24	28	32
BG	open	12	14	17	23	31,5
	close	8	10	11	15	21,5
CA		30,5	32	37,5	44	56
CB		6	7	9	11	12
D		4,5	5,5	5,5	6,6	6,6
E		8	9,5	9,5	11	11
EA		9	9	12	14	19
EB		44	53	62	76	95
H		M4x0,7	M5x0,8	M5x0,8	M6x1	M6x1
	Useful depth	6	7,5	10	9	12
G H9		3	4	4	5	6
	Useful depth	3	4	4	5	6
ØGA H9		3	4	4	5	6
	Useful depth	3	4	4	5	6
GB		5	6	6	7	8
GC		19,5	23,5	28	34,5	43,5
GD		22	26,5	31	38	47,5
N		M5x0,8	M5x0,8	M5x0,8	M5x0,8	G1/8
ØM H9		34	42	52	65	82
	Useful depth	2	2	2	2,5	3
NA		16	17	20	22	27
NB		8	9	9	12	13,5
P h9		2	3	4	6	8
R		2	2	2	3	4
S		M4x0,7	M4x0,7	M5x0,8	M5x0,8	M6x1
	Useful depth	8	8	10	10	12
Gewicht (gr.)		240	354	542	1000	1850

Sensor slots detail and inlet connections

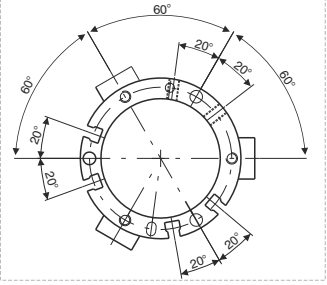

Overall dimensions Ø100 and Ø125

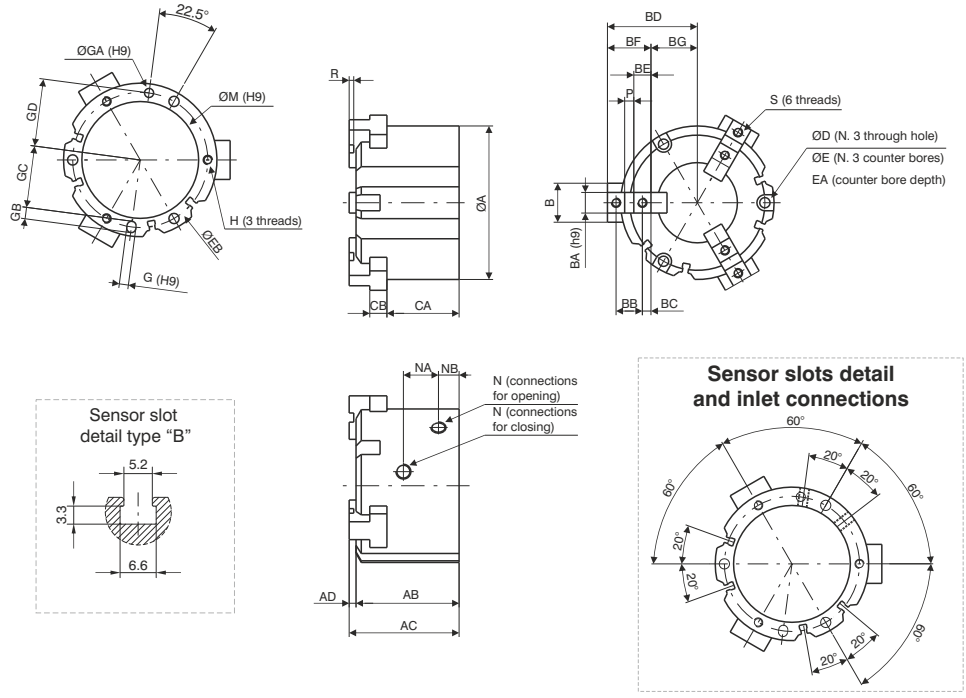

Bore		Ø100	Ø125
ØA		134	166
AB		90	114
AC		96	122
AD		6	8
B		34	40
BA h9		18	22
BB		23	31
BC		7,5	10,5
BD	open	78	98
	close	66	82
BE		15	21
BF		38	52
BG	open	40	46
	close	28	30
CA		63	84
CB		15	18
ØD		9	11
ØE		14	17,5
EA		21	34
EB		118	148
G H9		8	10
	Useful depth	6	8
ØGA H9		8	10
	Useful depth	6	8
GB		10	12
GC		54	68
GD		59	74
H		M8x1,25	M10x1,5
	Useful depth	16	20
ØM H9		102	130
	Useful depth	4	6
N		G1/4	G3/8
NA		30,6	38
NB		18	23,5
P h9		8	10
R		4	6
S		M8x1,25	M10x1,5
	Useful depth	16	20
Gewicht (gr.)		3360	6430

Gripping force (N)

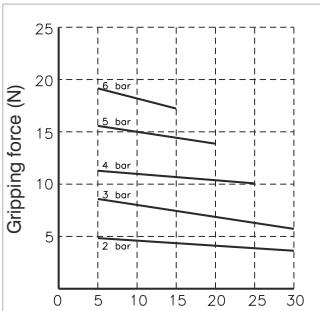

Ø16

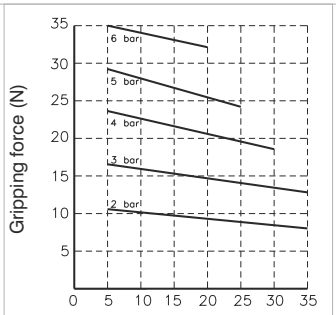

Ø20

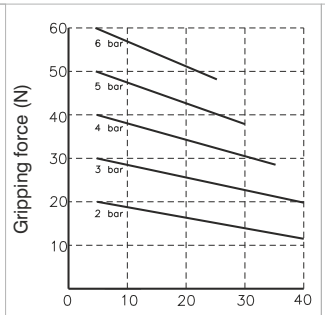

Ø25

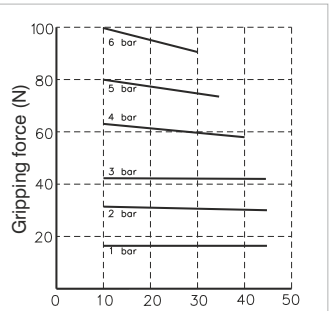

Ø32

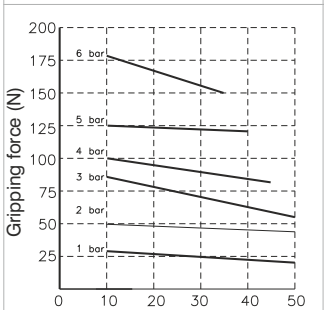

Ø40

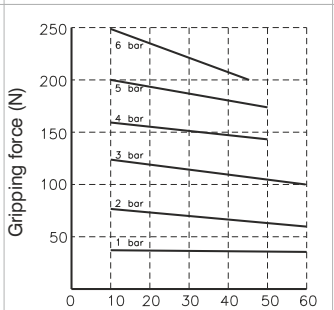

Ø50

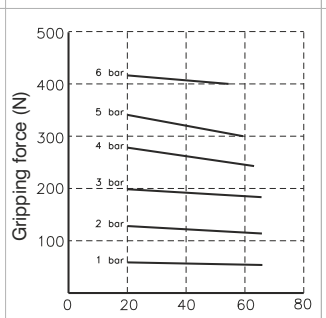

Ø63

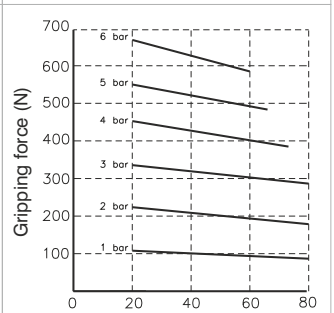

Ø80

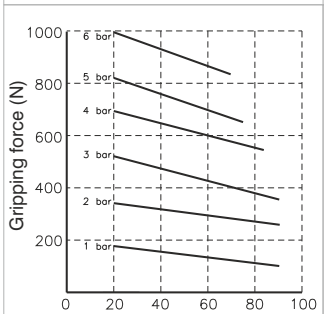

Ø100

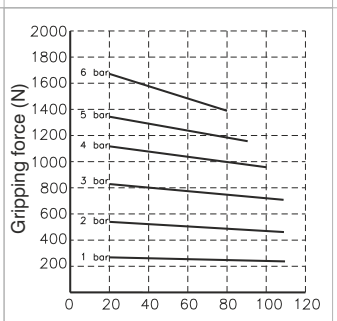

Ø125

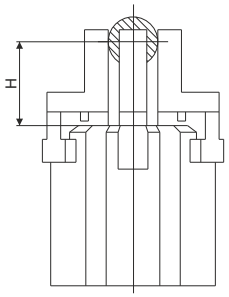

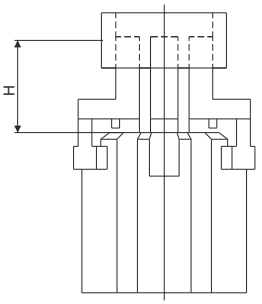

5

General

These rotary actuators convert linear motion of a piston into a rotary motion via a rack and pinion device, using a single pinion-rack system for the 6411 version and a double system on 6400 versions. The 6410 series actuators have fixed stops at 90 and 180 degrees; while on the 6400 series, rotation can be adjusted between 0 and 190 degrees using variable stops that can also be substituted with hydraulic stoppers (shock absorbers). These devices are equipped with a rotating table upon which the load is fixed.

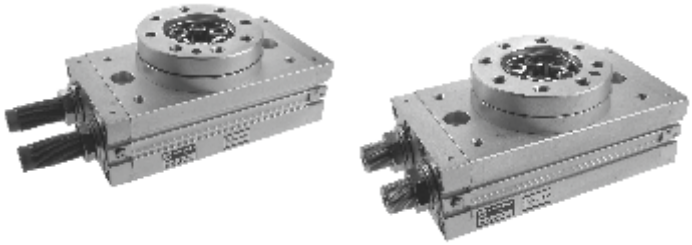

Ordering code

6400. _ . _

- **A** = Standard
- **R** = Cushioning (Shock absorber)

- **10** (piston ø15)
- **30** (piston ø20)
- **50** (piston ø25)
- **100** (piston ø32)
- **200** (piston ø40)

Construction characteristics

Body	anodised aluminium
Cover plate/End plate	anodised aluminium
Piston seal	NBR rubber
Pinion	steel
Rack	steel
Turn table	anodised aluminium
Cushioning	elastic bumper (hydraulic damper available on request)

Technical characteristics

Fluid	filtered and preferably lubricated air or not (If lubricated the lubrication must be continuous)
Max. pressure	10 bar (for type 100 and 200, 6 bar)
Working temperature	-5°C - +70°C
Rotation angle range	0 - 190°
Max. rotation	190°
Rotation speed	s/90° (see rotation time table)

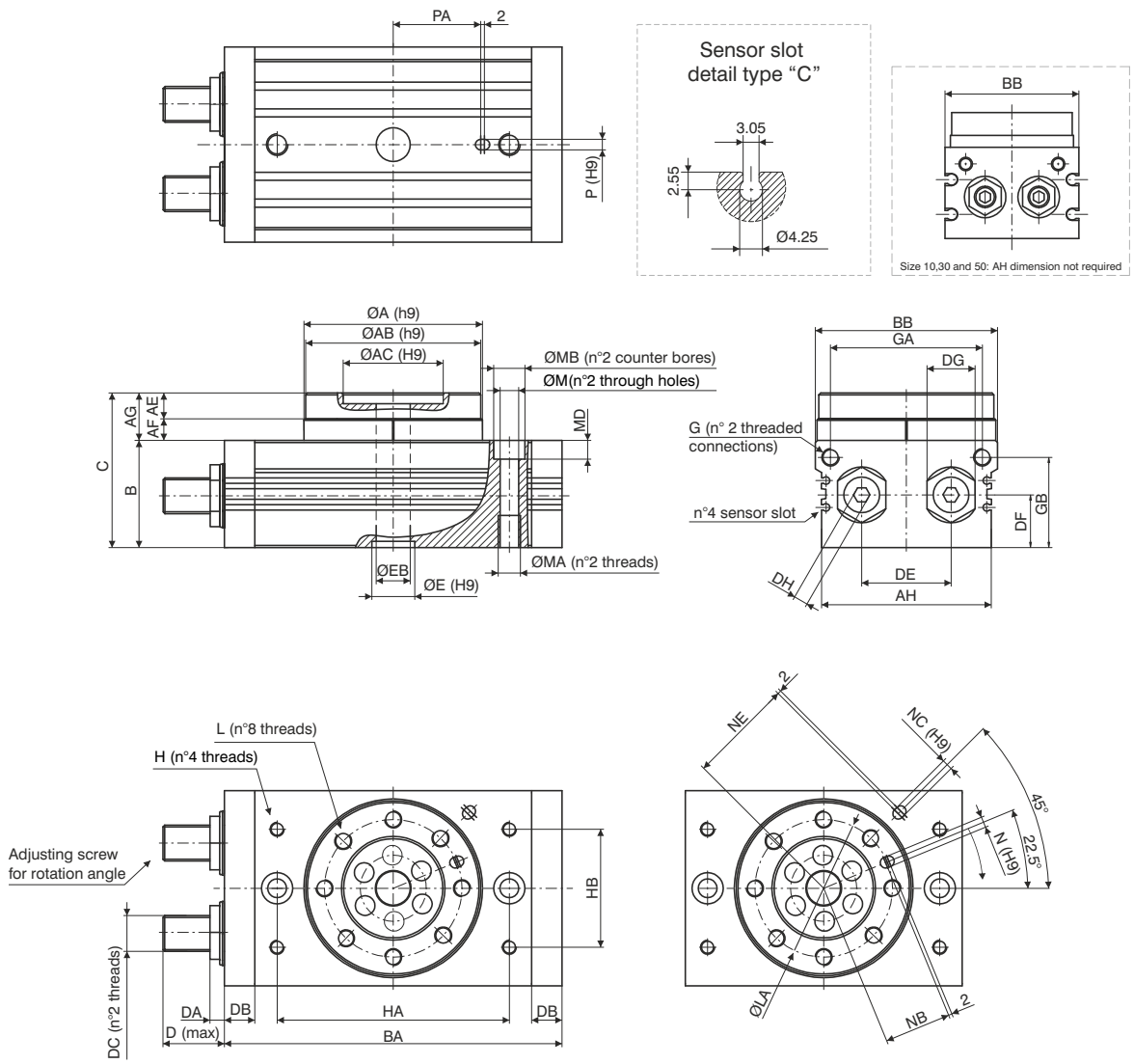

Size		10	30	50	100	200
Ø piston		Ø15	Ø21	Ø25	Ø32	Ø40
ØA h9		46	67	77	100	118
ØAB h9		45	65	75	98	116
ØAC H9		20	32	35	56	64
	Useful depth	4	4,5	5	6	9
AE		8	10	12	14,5	16,5
AF		5	7	8	12,5	15,5
AG		13	17	20	27	32
AH		/	/	/	95	114
B +0,5 / 0		34	40	46	59	74
BA		92	127	152	189	240
BB +0,5 / 0		50	70	80	102	120
C +0,5 / 0		47	57	66	86	106
D		17,7	25	31,4	34,3	40,2
DA		8,6	10,6	14	8	20
DB		9,5	12	15,5	17	24
DC		M8x1	M10x1	M14x1,5	M20x1,5	M27x1,5
DE		20	29	38	50	60
DF		15,5	18,5	22	29,5	36,5
DG		12	14	19	27	36
DH		4	5	6	8	10
ØE H9		15	22	26	24	32
	Useful depth	3	3	3	3,5	5,5
ØEB		5	9	10	19	24
G		M5x0,8	G1/8	G1/8	G1/8	G1/8

Size		10	30	50	100	200
Ø piston		Ø15	Ø21	Ø25	Ø32	Ø40
GA		34,5	50	63	85	103
GB		27,8	32	37,5	50,5	65,5
H		M5x0,8	M6x1	M8x1,25	M8x1,25	M12x1,75
	Useful depth	8	8	8	10	13
HA		60	84	100	130	150
HB		27	37	50	66	80
L		M5x0,8	M6x1	M8x1,25	M10x1,5	M12x1,75
	Useful depth	8	10	12	14,5	16,5
LA		32	48	55	77	90
M		6,8	8,6	10,5	10,4	14,2
MA		M8x1,25	M10x1,5	M12x1,75	M12x1,75	M16x2
	Useful depth	12	15	18	18	25
MB		11	14	18	17,5	20
MD		6,5	8,5	10,5	10,5	12,5
N H9		3	4	5	6	8
	Useful depth	3,5	4,5	5,5	6,5	8,5
NB		15	23	26,5	37,5	44
NC H9		/	/	/	6	8
	Useful depth	/	/	/	4,5	4,5
NE		/	/	/	59	69
P H9		/	/	/	6	8
	Useful depth	/	/	/	4,5	6,5
PA		/	/	/	49	54
Weight (gr.)		530	1230	2080	4100	7650

Permissible Loads

		Size				
		10	30	50	100	200
Radial Load (N)		80	200	320	400	550
Axial Load (N)	Fc	80	370	450	710	1000
	Ft	75	200	300	500	750
Torque Moment (Nm)		2,5	5,5	9,5	18	25

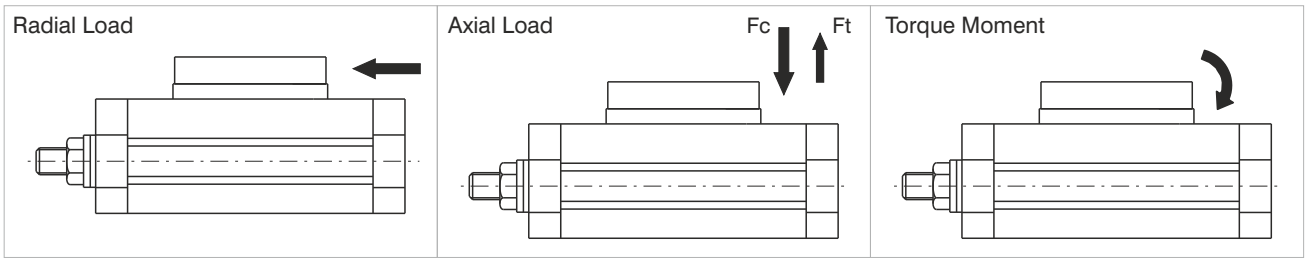

Torque Diagrams

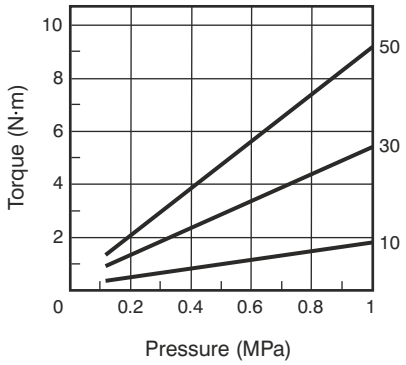

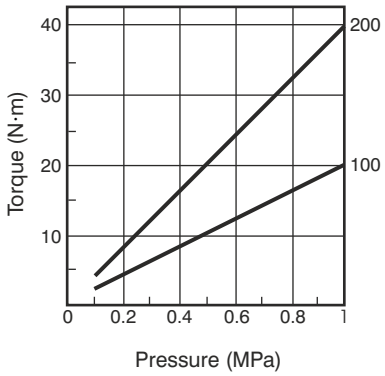

Rotation time (sec./90°)

Dimension	With adjusting screw	With hidraulic decelerator
10 - 30 - 50	0.2 - 1	0.2 - 0,7
100	0.2 - 2	0.2 - 1
200	0.2 - 2.5	0.2 - 1

Kinetic energy

Dimension	With adjusting screw	With hidraulic decelerator
10	0.006	Please apply to our tech-dpt for info (as general rule expressed valves can be multiplied by 3)
30	0.045	
50	0.08	
100	0.30	
200	0.52	

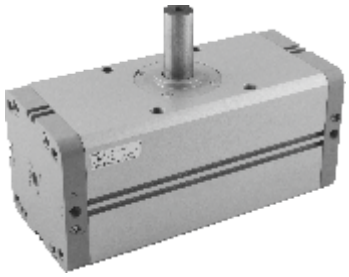

Ordering code

6411.Ø. _

- **50**
- **63**
- **80**
- **100**

- **90** = rotation 90°
- **180** = rotation 180°

Construction characteristics

Body	anodised aluminium
Piston	aluminium
End plate	anodised aluminium
Piston seal	NBR rubber
Pinion	steel
Rack	steel

Technical characteristics

Fluid	filtered and preferably lubricated air or not (If lubricated the lubrication must be continuous)
Max. pressure	10 bar
Working temperature	-5°C - +70°C
Rotation tolerance	0° - +4°

Overall dimensions Ø50 and Ø63

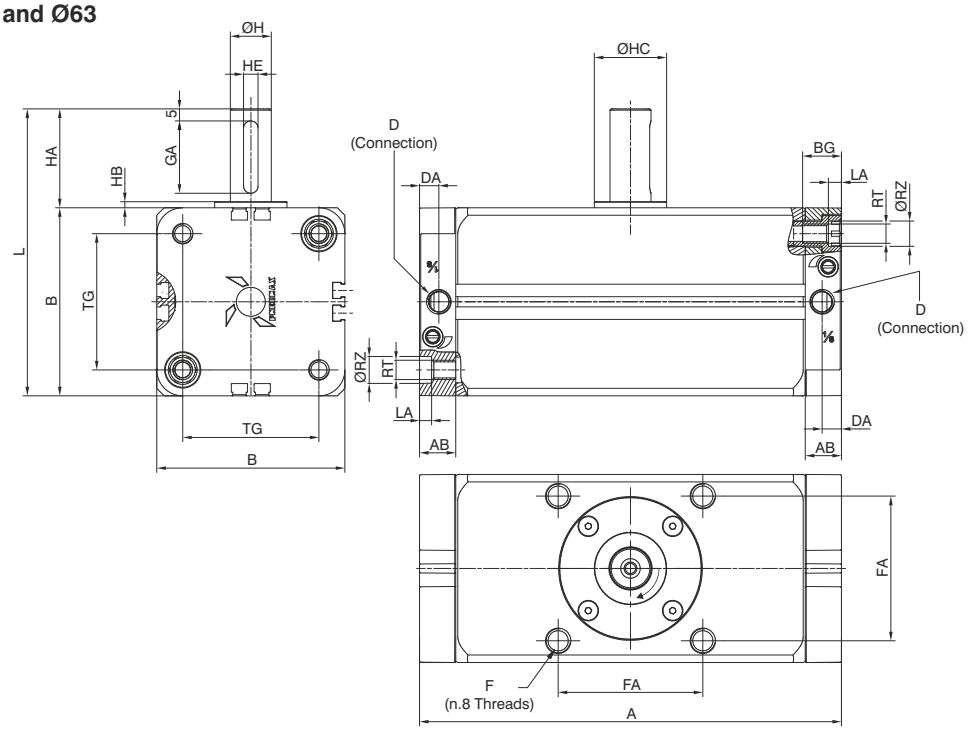

Overall dimensions Ø80 and Ø100

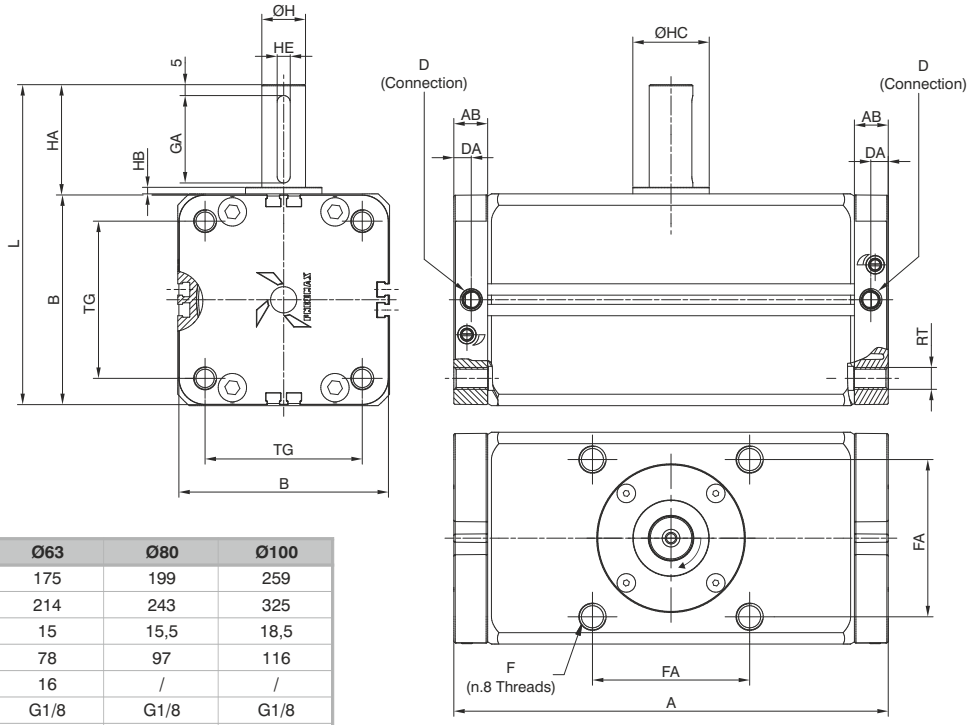

Bore		Ø50	Ø63	Ø80	Ø100
A	90°	156	175	199	259
	180°	189	214	243	325
AB		15	15	15,5	18,5
B		66	78	97	116
BG		16	16	/	/
D		G1/8	G1/8	G1/8	G1/8
DA		8	8	8	8
F		M8x1,25	M10x1,5	M12x1,75	M12x1,75
	Useful depth	12	15	15	18
FA		48	60	72	85
GA		25	30	40	45
H		15	17	20	25
HA		36	41	50	60
HB		2,5	2,5	3	4
HC		25	30	35	39,5
HE^{H9}		5	6	6	8
L		102	119	147	176
LA		5	5	/	/
RT		M8	M8	M10	M10
RZ		10,5	10,5	/	/
TG		46,5	56,5	72	89
Weight (gr.)	90°	1575	2451	4162	6989
	180°	1815	2823	4774	8329

Sensor slot
detail type "B"

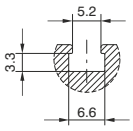

Usable sensors code
1590._
LRS._
LHS._

5

Allowable Loads

	Bore			
	Ø50	Ø63	Ø80	Ø100
Radial load (N)	200	300	400	600
Axial Load in compression (N)	500	600	900	1000
Tensile Axial Load (N)	200			

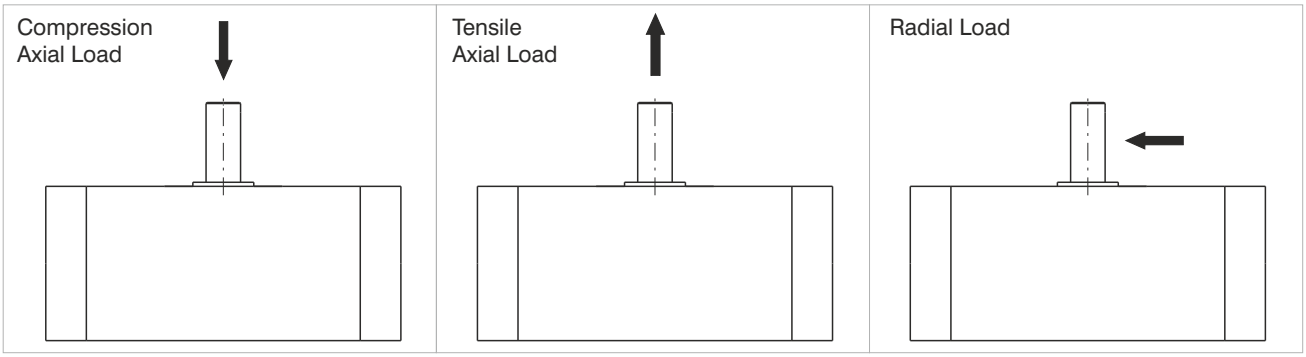

Torque Diagrams

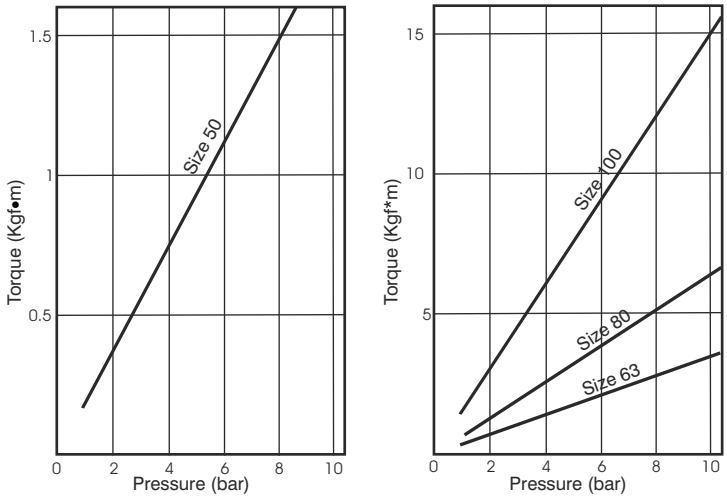

Max Kinetic energy (Kg·cm)

Kinetic energy (cushioning angle 35°)

Bore			
Ø50	Ø63	Ø80	Ø100
10	15	20	30

Rotation time according to inertial moments

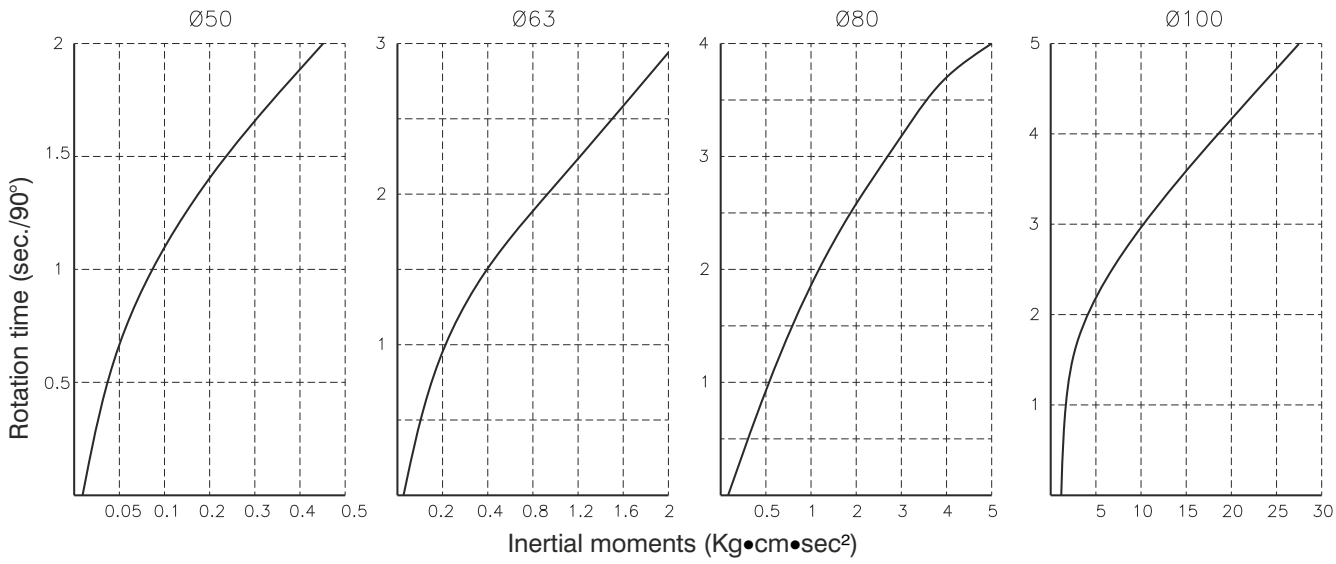

Foot (MS1)

Ordering code
1540.Ø.05/1F

The kit comprises:
n°1 foot (plated zinc steel)
n°2 screws (plated zinc steel)

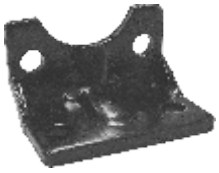

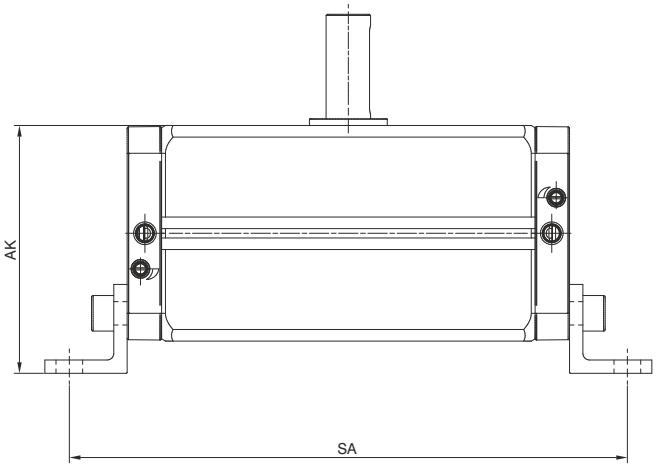

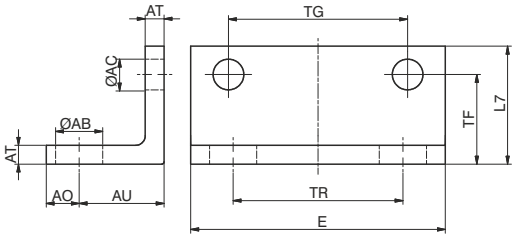

Bore		Ø50	Ø63	Ø80	Ø100
AK		78	89	111,5	132
SA	90°	198	217	251	313
	180°	231	256	295	379

General

The vane type rotary actuators, 6420 series is designed to operate at 90-180 or 270 deg. In a contained space. Dimensionally are more compact than other types of rotary actuators.

The range includes bore sizes from 10 to 100 in 4 configurations:
- Basic.
- With rotary angle adjustment mechanism.
- With sensing support.
- With rotary angle adjustment mechanism and sensing support.

The bodies are in aluminium , the shafts in chrome plated steel and the seals in NBR.
The sensing support kit enables for the sensors to be positioned in any position.
The rotary angle adjustment mechanism enables the adjustment of the complete rotation on bore sizes 10 to 40 while on the others sizes carries as standard hydraulic dampers which enable the adjustment only of the last part of the rotation.
The units can be fixed using the thread on the body or the through holes on the body.
On bore sizes 50 to 100 the shaft runs into ball bearings which ensure high resistence.o rotante è guidato su cuscinetti a sfere che assorbono i carichi radiali e assiali, garantendo durata e affidabilità.

Ordering code

6420.Ø._._

Size
Ø10
Ø15
Ø20
Ø30
Ø40
Ø50
Ø63
Ø80
Ø100

Rotation angle
90 = 90°
180 = 180°
270 = 270°

Version
/ = Without adjustable rotation angle, and without sensor support
R = With adjustable rotation angle
S = With sensor supports
T = With adjustable rotation angle and sensor supports

5

Construction characteristics

Body	anodised aluminium
Rod	steel
Seals	NBR
Vane	vulcanized NBR rubber on steel core
Cushoning	elastic bumper; hydraulic dampers from size Ø50 - Ø100 versions R or T

Technical characteristics

Fluid	Filtered air and preferably lubricated
Working pressure	1,5 - 7 bar
Temperature	0°C - 50°C
Rotation range	90° - 180° - 270°
Max. allowed leak	Ø10 - Ø40 = 0,3 Nl/min / Ø50 - Ø100 = 0,5 Nl/min

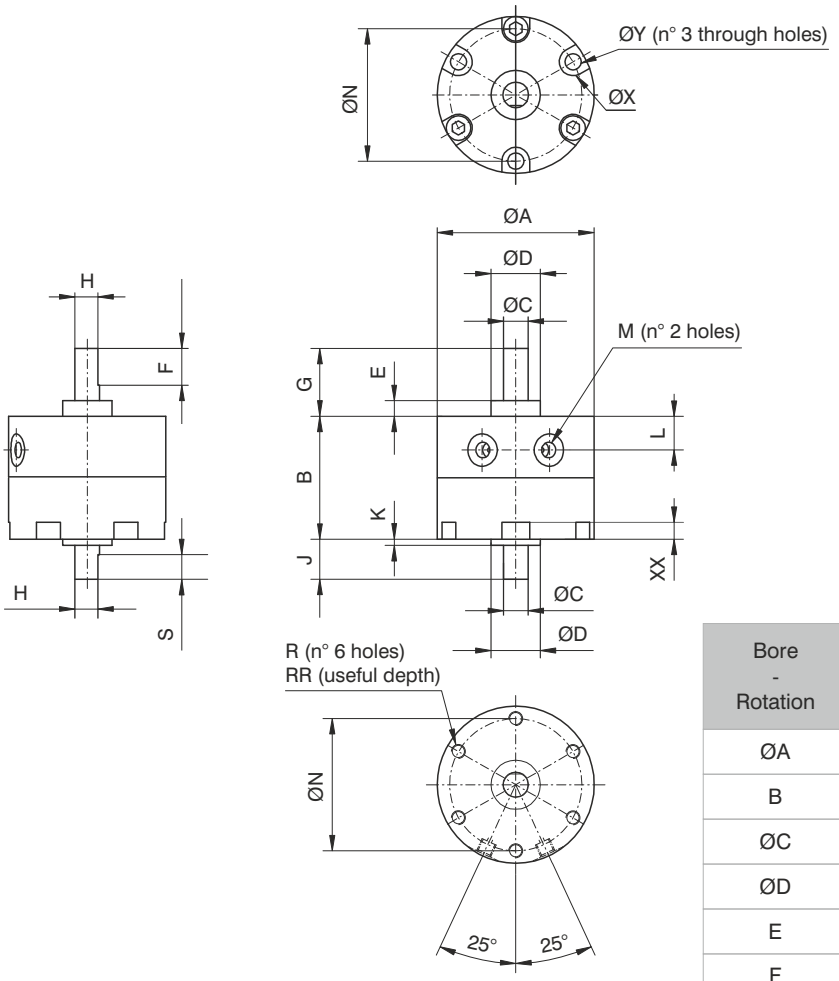

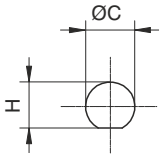

- Ø10 - Ø30 long shaft
- Ø10 - Ø40 short shaft

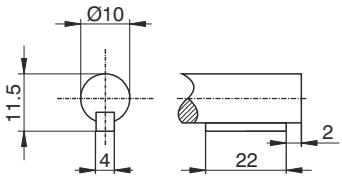

- Ø40 long shaft

Bore - Rotation	10 - 90°	15 - 90°	20 - 90°	30 - 90°	40 - 90°
	10 - 180°	15 - 180°	20 - 180°	30 - 180°	40 - 180°
	10 - 270°	15 - 270°	20 - 270°	30 - 270°	40 - 270°
ØA	30	35	44	51	64
B	17	20,1	29,1	40	45
ØC	4	5	6	8	10
ØD	9	12	14	16	25
E	3	4	4,5	5	6,5
F	9	10	10	12	22
G	14	18	20,3	22	30
H	3,5	4,5	5,5	7,5	9
J	8	9	9,6	13	15
K	1	1,5	1,6	2	4,5
L	4,2	5	8,5	11	9,5
M	M5x0,8	M5x0,8	M5x0,8	M5x0,8	M5x0,8
ØN	24	29	36	43	56
P	23,3	28	28	30,8	33
Q	24	29,5	30,5	34	36
R	M3x0,5	M3x0,5	M4x0,7	M5x0,8	M5x0,8
RR	3	3	4,5	9	9
S	5	6	7	8	9
T	24	28	28,5	32,5	34,5
U	18	22	21	24	26
ØV	18	24	30	34	34
ØX	6	6	7,5	9	9
XX	3,5	3,5	4,5	5,5	5,5
ØY	2,3	2,3	3,2	4,2	4,2
Z	29	34	42	47	47
Weight (gr.) Base	28	48	112	200	342
Weight (gr.) With regulation rotation system	78	116	240	390	805

Adjustable rotation angle version

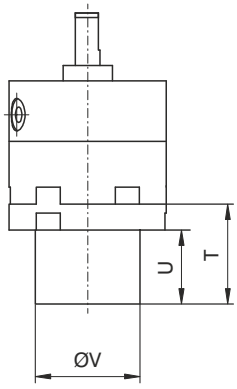

With sensor support version

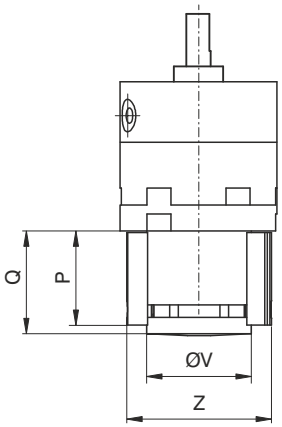

5

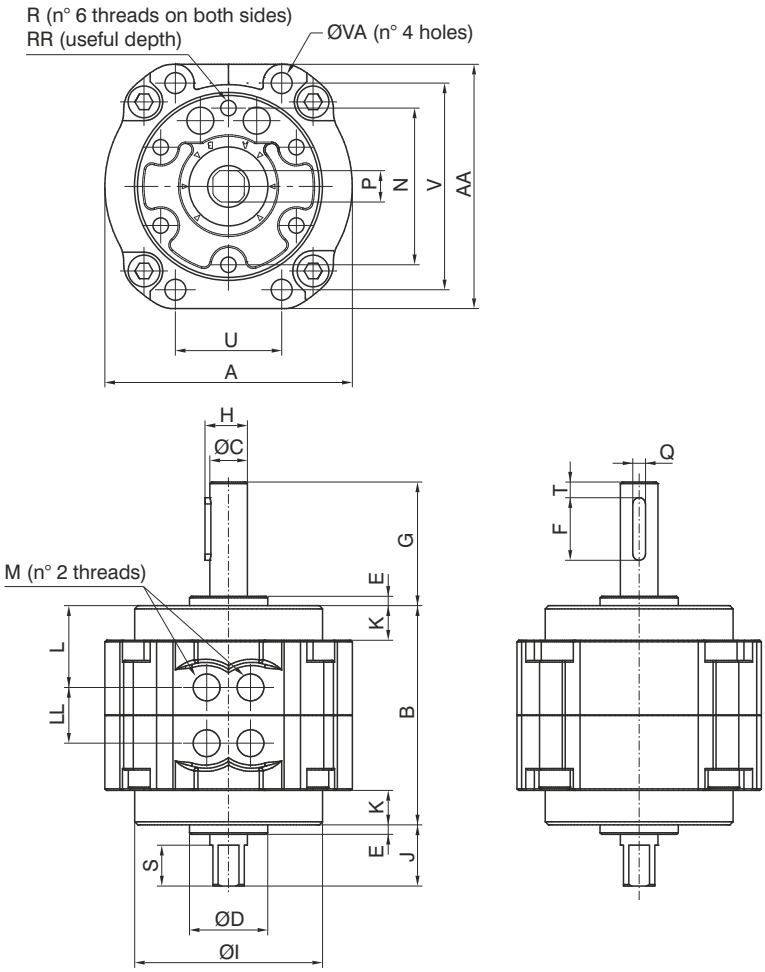

Adjustable rotation angle version

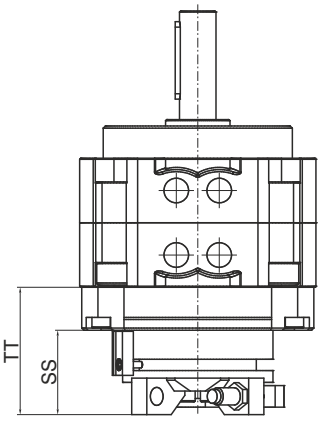

With sensor support version

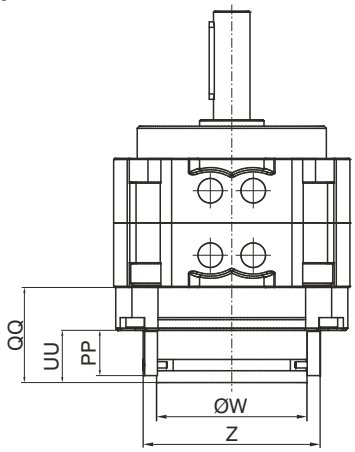

Bore - Rotation	50 - 90°	63 - 90°	80 - 90°	100 - 90°
	50 - 180°	63 - 180°	80 - 180°	100 - 180°
	50 - 270°	63 - 270°	80 - 270°	100 - 270°
A	79	98	110	140
AA	78	98	110	140
B	70	80	90	103
ØC	12	15	17	25
ØD	25	28	30	45
E	3	3	3	4
F	20	25	36	40
G	39,5	45	53,5	65
H	13,5	17	19	29
ØI	60	75	88	108
J	19,5	21	23,5	30
K	11	14	15	11,5
L	26	28,9	30	35,4
LL	18	22,2	30	32,2
M	G1/8"	G1/8"	G1/4"	G1/4"
N	50	60	70	80
P	10	12	13	19
PP	21	21	21	21
Q	4	5	5	7
QQ	39,4	43	44	48,5
R	M6x1	M8x1,25	M8x1,25	M10x1,5
RR	8	10	14	14
S	13	14	16	16
SS	38	38	39	39,5
T	5	7,5	5	5
TT	53	56,5	59	63
U	34	39	48	60
UU	24,5	24,5	24,5	24,5
V	66	83	94	120
ØVA	6,5	9	9	11
ØW	60	60	70	70
Z	73	73	83	83
Weight (gr.) Base	760	1290	1920	4100
Weight (gr.) With regulation rotation system	1100	1690	2370	4840

ROTATING SHAFT KEY FLAT POSITION

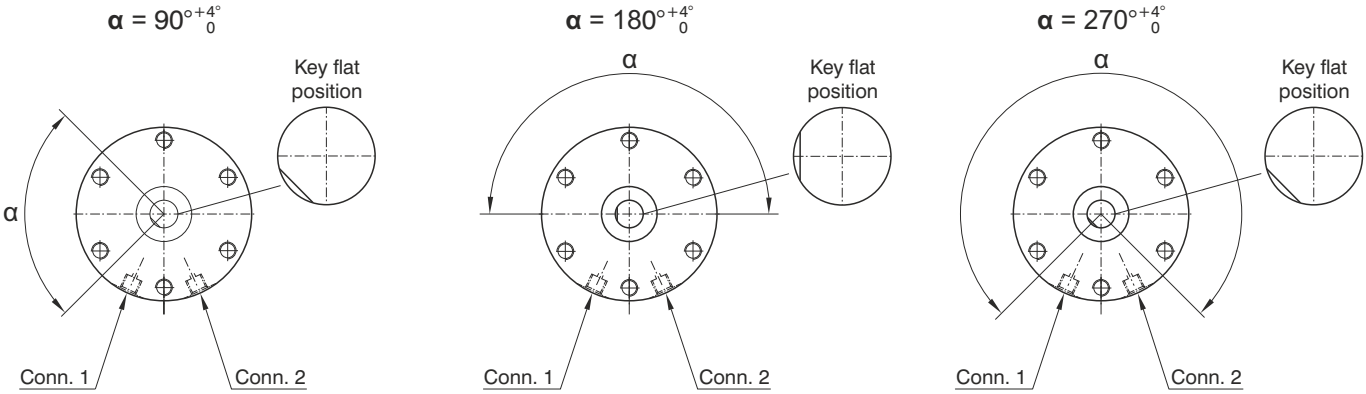

ROTATION ANGLE SETUP

To regulate the rotation angle (codes 6420..R or T), follow the instructions below

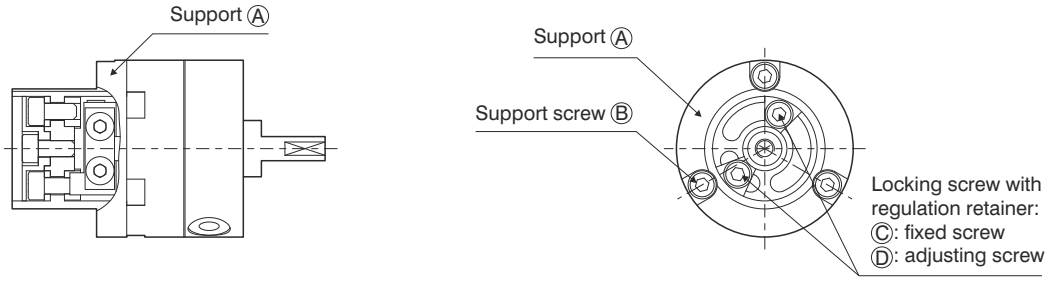

Phase 1 : Choose the regulation configuration based on the following options (consider the actuator base position):
rotation 90°, regulation 0 - 90°, rotation 180°, regulation 0 - 180°, rotation 270°, regulation 0 - 175°

ROTATION CONFIGURATION

90°

Standard version — from 0° to 90°

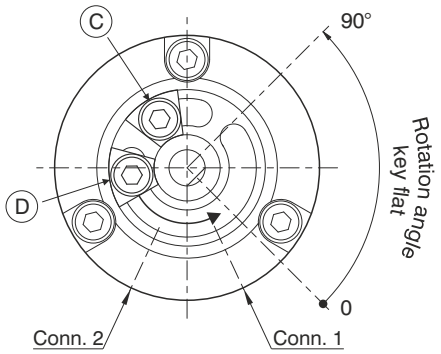

from 90° to 0°

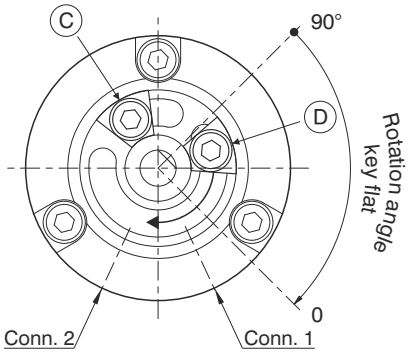

ROTATION CONFIGURATION

180°

Standard version — from 0° to 180°

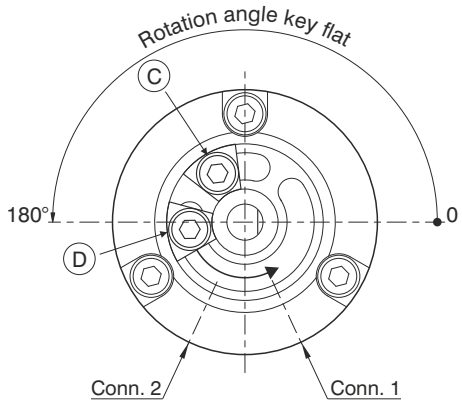

from 180° to 0°

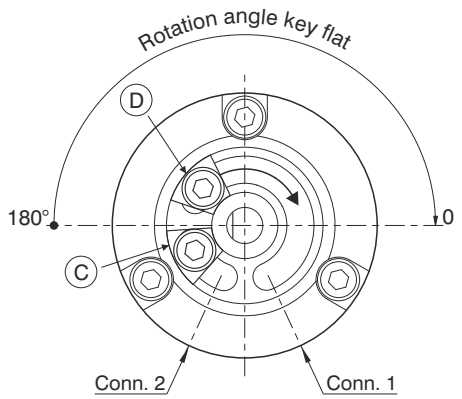

5

ROTATION CONFIGURATION

270°

Standard version — from 0° to 175°

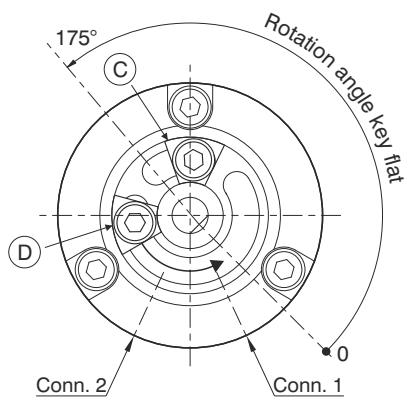

from 110° to 270°

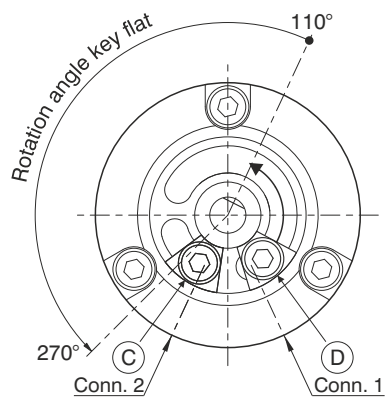

from 270° to 175°

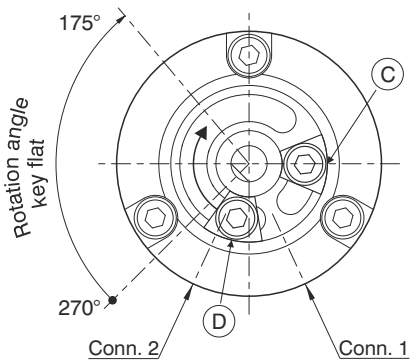

from 250° to 0°

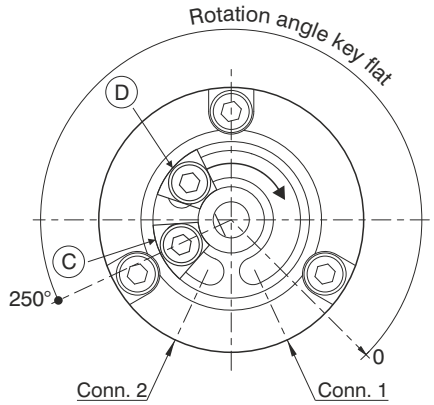

Ⓒ = **Fixed screw** Ⓓ = **Adjusting screw**

Phase 2 : If the desired settings do not correspond to the basic version settings:
- remove screw Ⓔ and disk Ⓕ or Ⓖ (depending on the version) (see figure 1)
- remove screws Ⓑ, the actuator support Ⓐ (see figure 1) and unlock blocking screws Ⓒ and Ⓓ (see rotation configuration)
- position screws Ⓒ and Ⓓ and the key flat of rotating shaft as indicated in the chosen rotation configuration in order to align the key flat of rotating shaft (see figure 2)
- re-assemble actuator support Ⓐ, tighten screws Ⓑ
- position screws Ⓒ and Ⓓ according to the desired adjustment and tighten the screws
- re-assemble disk Ⓕ or Ⓖ and screw Ⓔ

Figure 1

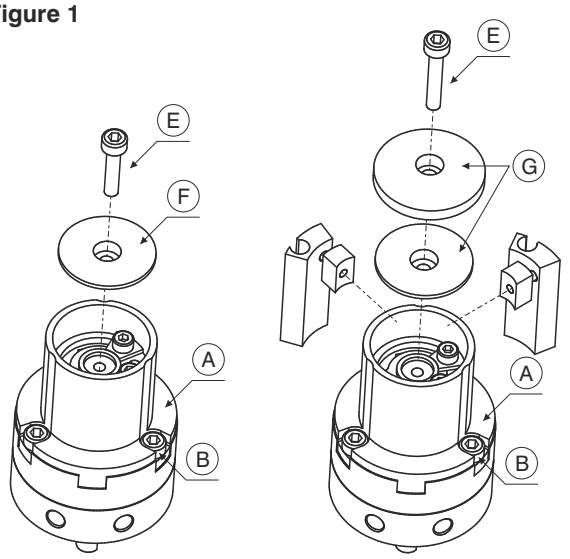

Version "R" **Version "T"**

Figure 2

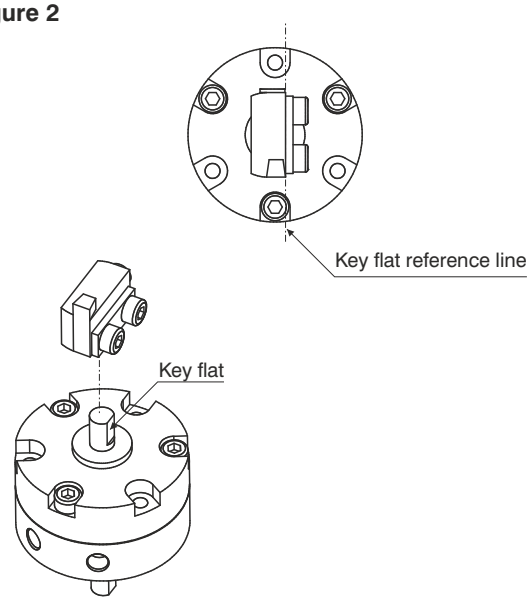

ROTATING SHAFT SPLINE POSITION

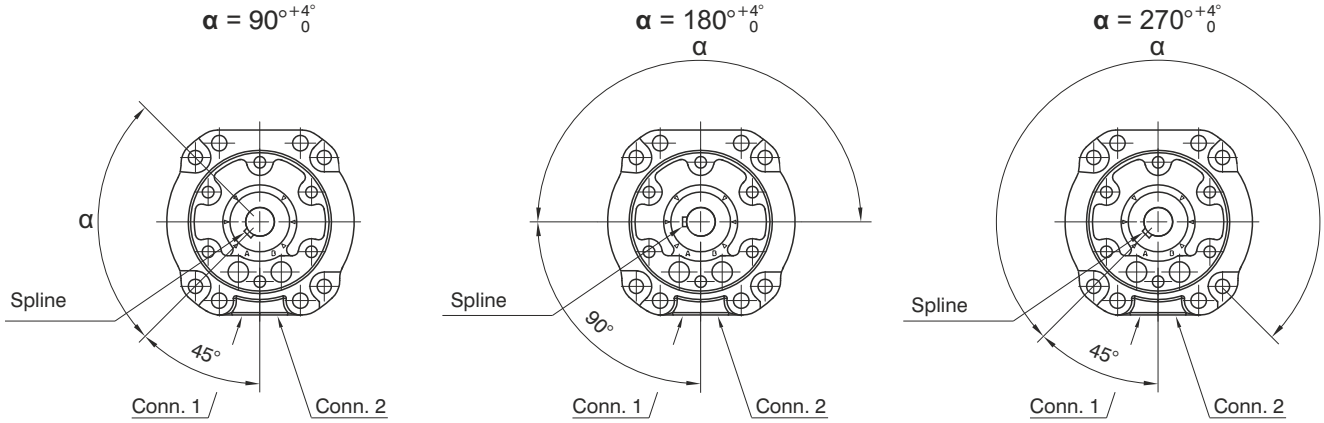

ROTATION ANGLE SETUP

The version with adjustable rotation angle (cod. 6420..R or T) is available with hydraulic dampers which enable to regulate the rotation angle by 10° and to decelerate moving mass.

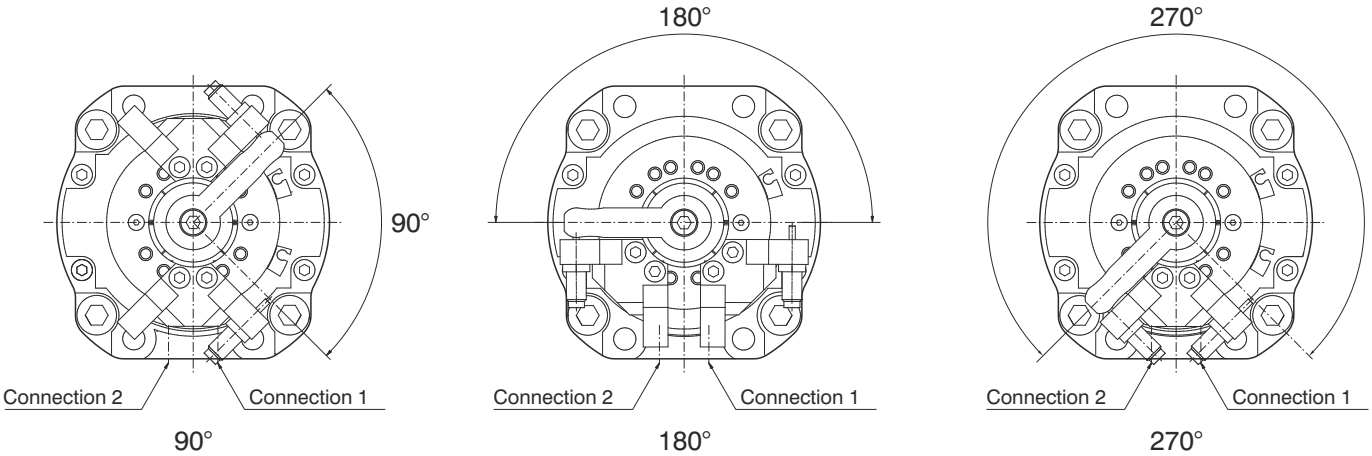

Phase 1 - Unfasten screw Ⓐ
Phase 2 - Assemble the switch Ⓒ into the dedicated housing Ⓑ and lock with screw Ⓓ
Phase 3 - Rotate block Ⓑ in the desired position (see following image)

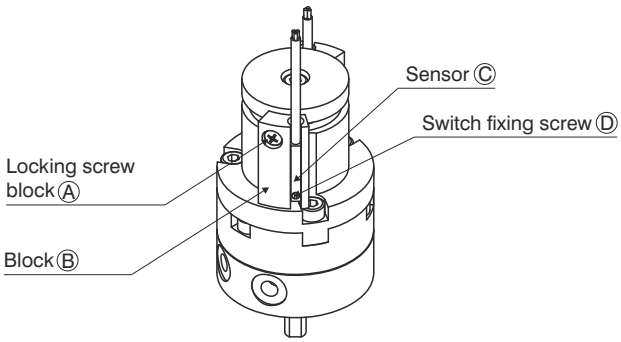

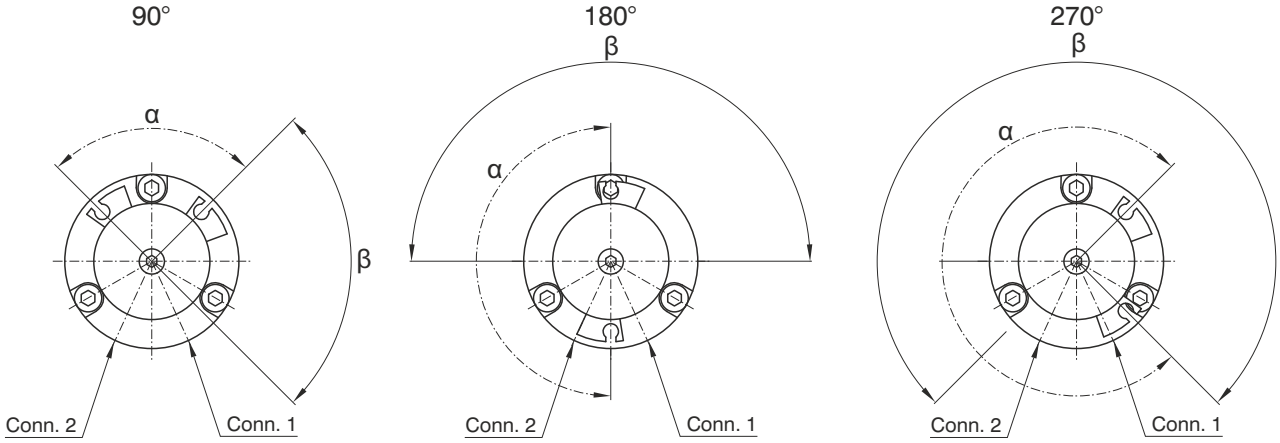

α - magnet rotating angle
β - shaft key flat rotating angle
For correct functionality position the switch within angle **α**

Phase 4 - tighten screw Ⓐ
Phase 5 - repeat the following phases for the second switch

AVAILABLE SENSORS

Code
1581.U
TRS.U
1581.HAP
THS.P

Code
1583.DC
1583.HAP
THR.P

Phase 1 - Unfasten screw Ⓐ
Phase 2 - Assemble the switch Ⓒ into the dedicated housing Ⓑ and lock with screw Ⓓ
Phase 3 - Rotate block Ⓑ in the desired position (see following image)

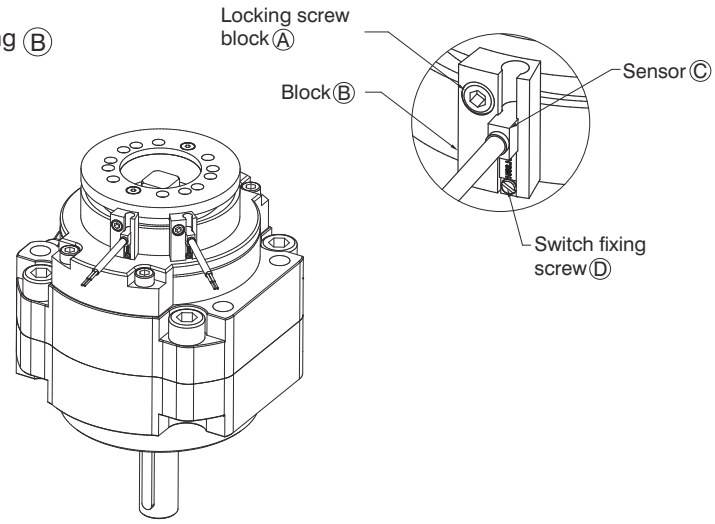

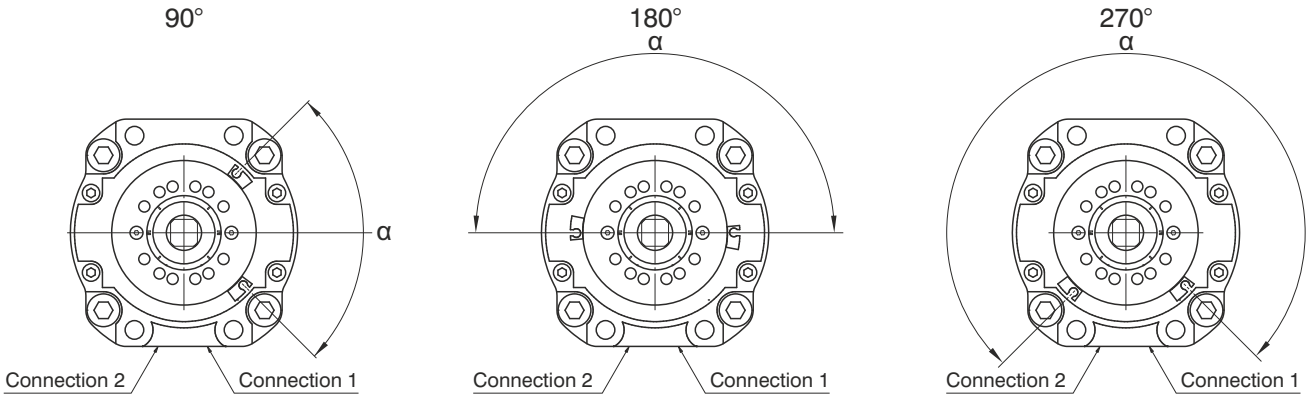

α - magnet rotating angle (that corresponds to the shaft key flat rotating angle)
For correct functionality position the switch within angle **α**

Phase 4 - tighten screw Ⓐ
Phase 5 - repeat the following phases for the second switch

AVAILABLE SENSORS

	Code
	**1583.DC**
	1583.HAP
	THR.P

5

Ø10

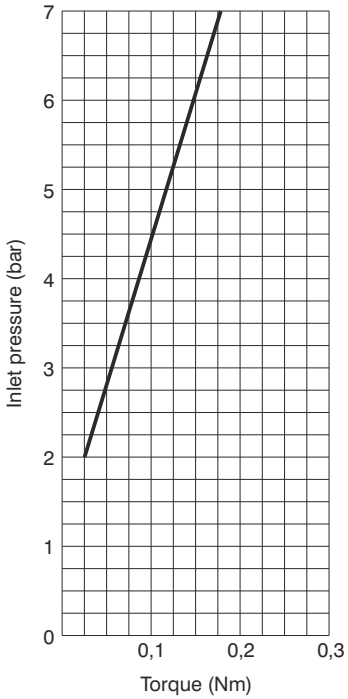

Ø15

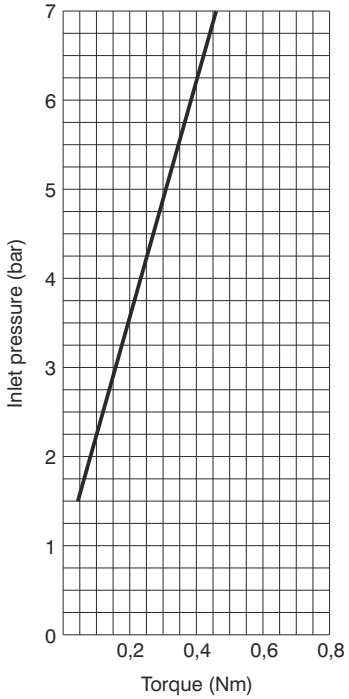

Ø20

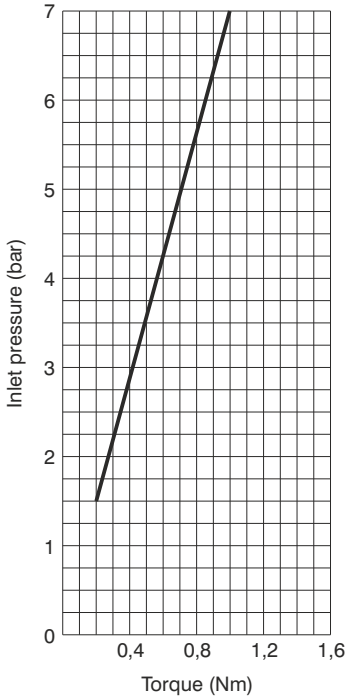

Ø30

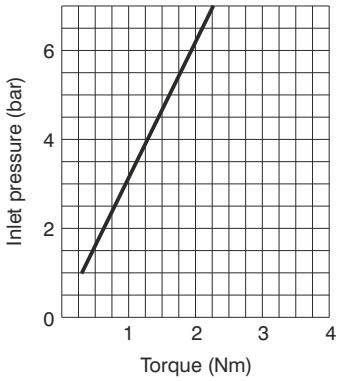

Ø40

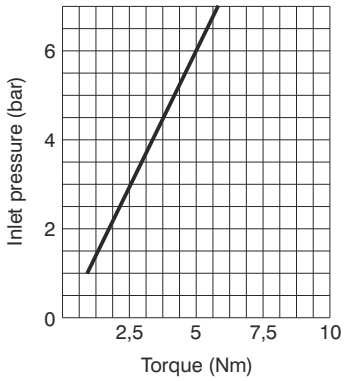

Ø50

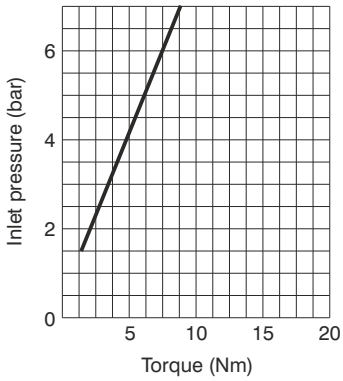

Ø63

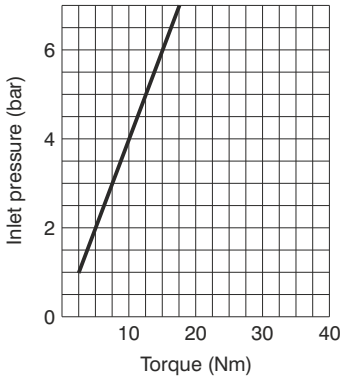

Ø80

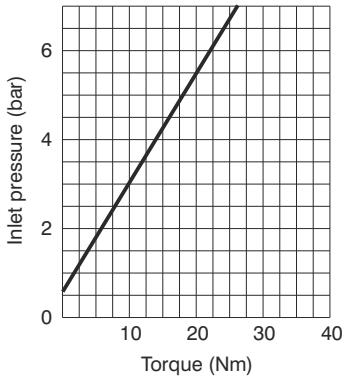

Ø100

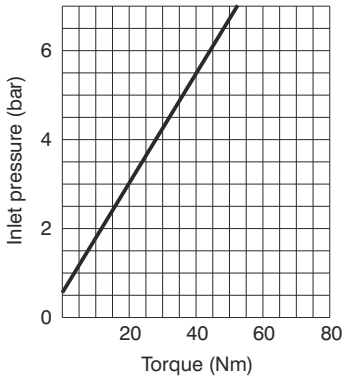

Mounting types

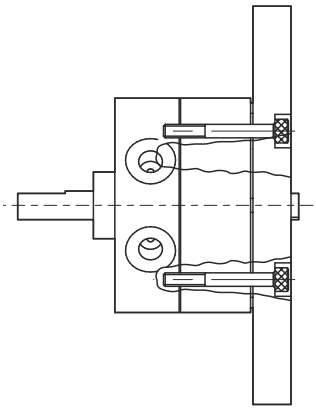

Rear mounting

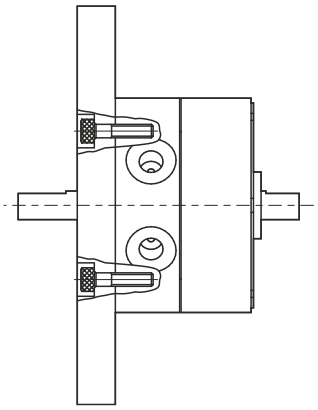

Frontal mounting

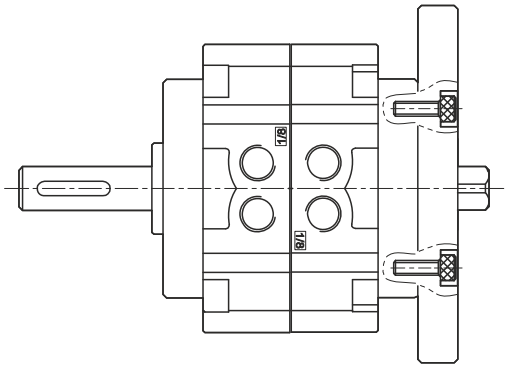

Rear mounting

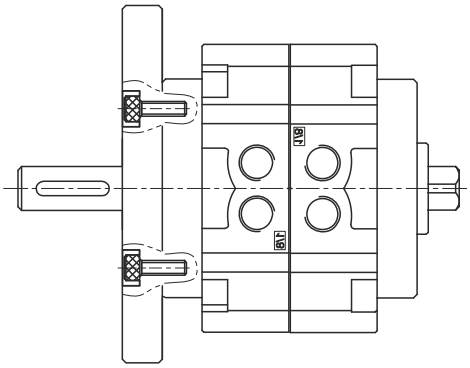

Frontal mounting

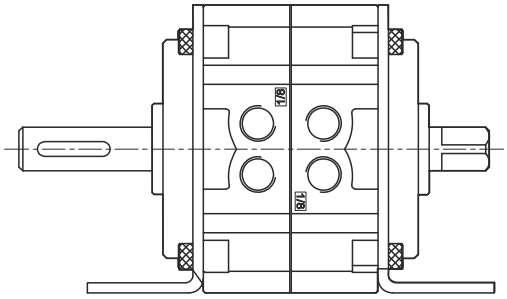

Mounting with flange

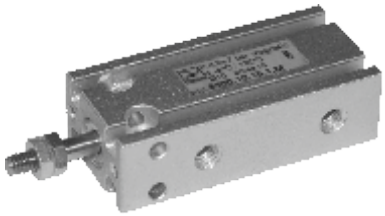

Ordering code

6500.Ø.stroke. 1 . _

- **10**
- **16**
- **20**
- **25**

- = non magnetic
- **M** = magnetic

Construction characteristics

Body	anodised aluminium
Piston rod	stainless steel
Piston	brass
Rods bushing	sinterize bronze
End plate	anodised aluminium
Cushioning washer	PUR
Seal	oil resistant NBR rubber

Technical characteristics

Fluid	filtered and preferably lubricated air or not (If lubricated the lubrication must be continuous)
Minimum working pressure	0.6 bar (for bore Ø10 - Ø16) 0.5 bar (for bore Ø20 - Ø32)
Max pressure	7 bar
Operating temperature	-5°C - +70°C
Cushioning	with elastic bumper
Stroke tolerance	+1 / 0 mm
Piston speed	50 - 500 mm/sec (without load)

Corse standard

	Stroke							
Bore	**5**	**10**	**15**	**20**	**25**	**30**	**40**	**50**
Ø10	●	●	●	●	●	●		
Ø16	●	●	●	●	●	●		
Ø20	●	●	●	●	●	●	●	●
Ø25	●	●	●	●	●	●	●	●

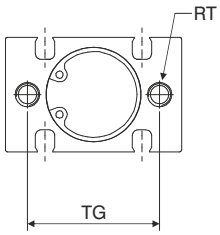

*Ø10: n° 2 piston rod nuts
Ø16: n° 1 piston rod nut

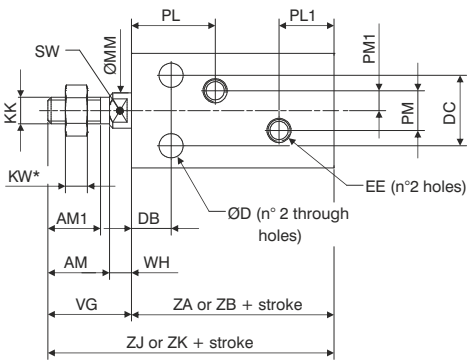

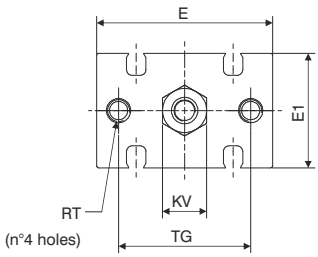

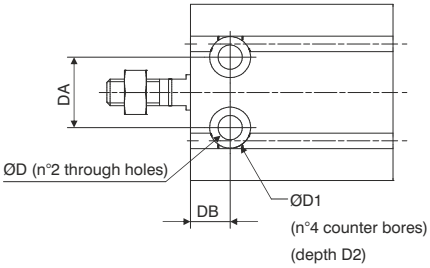

Sensor slot
detail type "D"

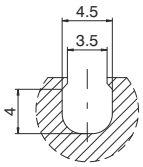

Table of dimensions

		Bore			
		Ø10	**Ø16**	**Ø20**	**Ø25**
AM		/	12,5	14	18
AM1		10	11	12	15,5
ØD		Ø3,2	Ø4,5	Ø5,5	Ø5,5
ØD1		Ø6	Ø7,6	Ø9,3	Ø9,3
D2		5	6,5	8	9
DA		11	14	16	20
DB		7	7	9	10
DC		9	12	16	20
E		24	32	40	50
E1		15	20	26	32
EE		M5	M5	M5	M5
KK		M4	M5	M6	M8
KV		7	8	10	13
KW		3	4	5	5
ØMM		Ø4	Ø6	Ø8	Ø10
PL		16,5	16,5	19	21,5
PL1		10	11,5	12,5	13
PM		/	4	9	9
PM1		/	2	4,5	4,5
RT		M3 (useful depth 5)	M4 (useful depth 6)	M5 (useful depth 8)	M5 (useful depth 8)
SW		/	5	6	8
TG		18	25	30	38
VG		16	16	19	23
WH		/	3,5	5	5
ZA	magnetic	36	40	46	50
ZB	non magnetic	36	30	36	40
ZJ	magnetic	52	56	65	73
ZK	non magnetic	52	46	55	63
Weight (gr.)					
Stroke 0		32	44	84	159
every 5 mm		4	6	11	17

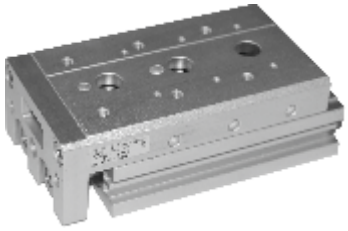

Ordering code

6600.Ø.stroke. _ . _

- **8**
- **12**
- **16**
- **20**
- **25**

- = Without accessories
- **A** = Double regulation end stroke
- **AU** = Regulation front end stroke
- **AR** = Regulation rear end stroke
- **D** = Double shock absorber
- **DU** = Front shock absorber
- **DR** = Rear shock absorber

Construction characteristics

Body	anodised aluminium
Piston rod	stainless steel
Piston	stainless steel
Piston rod bushing	sintered bronze
End plate	anodised aluminium
Cushioning washer	PUR
Seal	oil resistant NBR rubber
Flange	anodised aluminium
Upper plate	anodised aluminium

Technical characteristics

Fluid	filtered and preferably lubricated air or not (If lubricated the lubrication must be continuous)
Working pressure	1.5 - 7 bar
Working temperature	-5°C - +70°C
Cushioning	with elastic bumper

Theoretical force

Bore	Effective area (mm^2)	Force (N)						
Ø8	Out	101	20	30	40	51	61	71
	In	75	15	23	30	38	45	53
Ø12	Out	226	45	68	90	113	136	158
	In	170	34	51	68	85	102	119
Ø16	Out	402	80	121	161	201	241	281
	In	302	60	91	121	151	181	211
Ø20	Out	628	126	188	251	314	377	440
	In	471	94	141	188	236	283	330
Ø25	Out	982	196	295	393	491	589	687
	In	756	151	227	302	378	454	529
			2	3	4	5	6	7
			Working pressure(bar)					

Standard strokes

	Stroke								
Bore	10	20	30	40	50	75	100	125	150
Ø8	●	●	●	●	●	●			
Ø12	●	●	●	●	●	●	●		
Ø16	●	●	●	●	●	●	●	●	
Ø20	●	●	●	●	●	●	●	●	●
Ø25	●	●	●	●	●	●	●	●	●

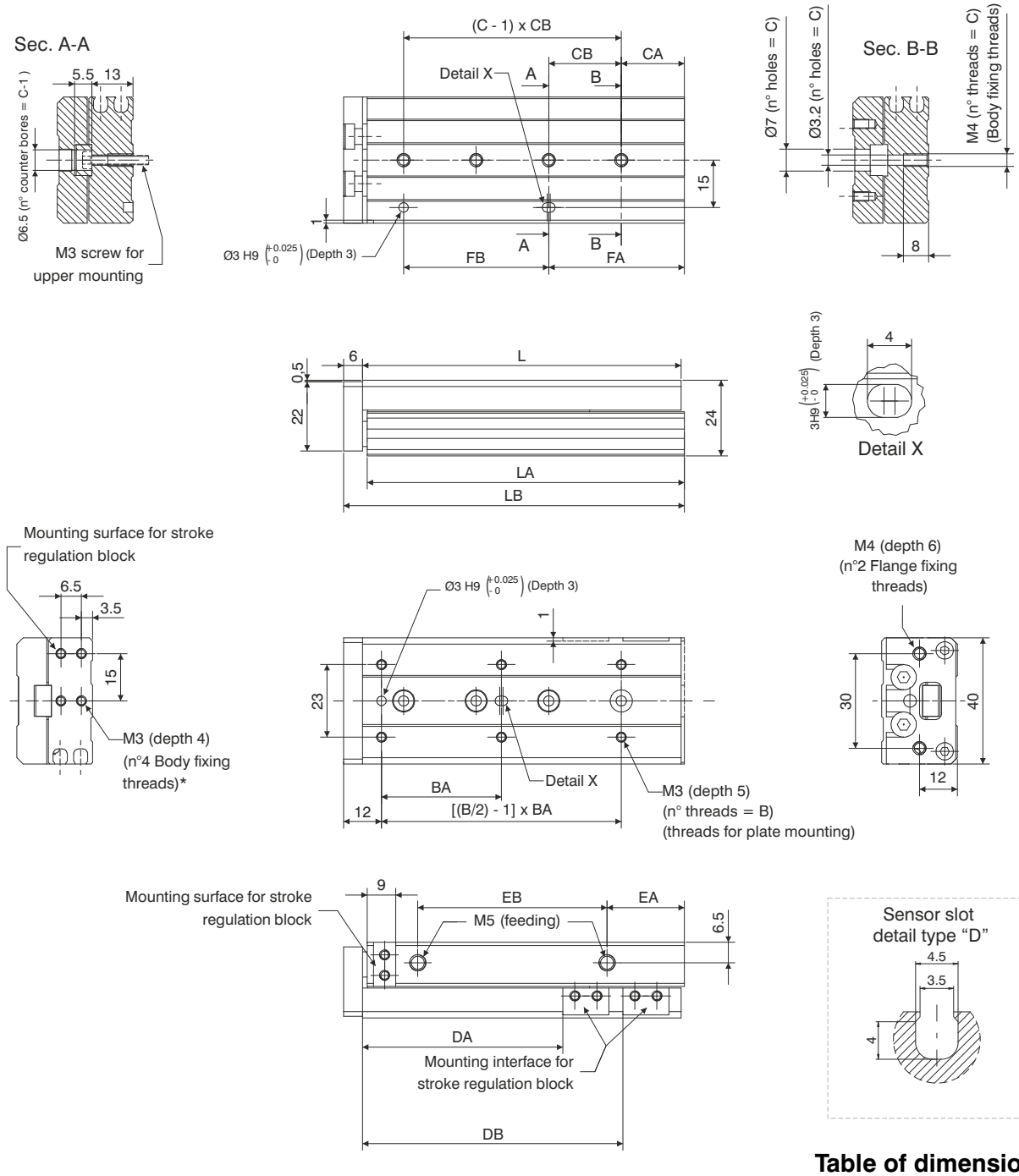

Table of dimensions

	Standard stroke					
	10	**20**	**30**	**40**	**50**	**75**
B	4	4	4	4	6	6
BA	25	25	40	50	38	50
C	2	2	3	3	4	5
CA	9	12	13	15	20	27
CB	28	30	20	28	23	28
DA	23,5	33,5	43,5	53,5	63,5	88,5
DB	/	/	/	/	82,5	132,5
FA	17	12	33	43	43	83
FB	20	30	20	28	46	56
EA	13	8,5	9,5	10,5	24,5	38,5
EB	19,5	29	39	56	60	96
L	49	54	65	83	101	151
LA	48,5	53,5	64,5	82,5	100,5	150,5
LB	56	61	72	90	108	158
Weight (gr.)	150	160	190	235	285	410

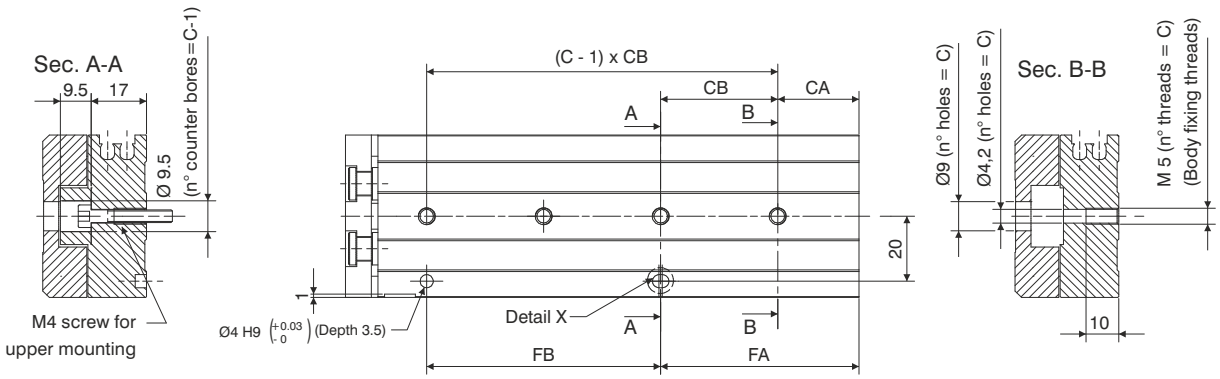

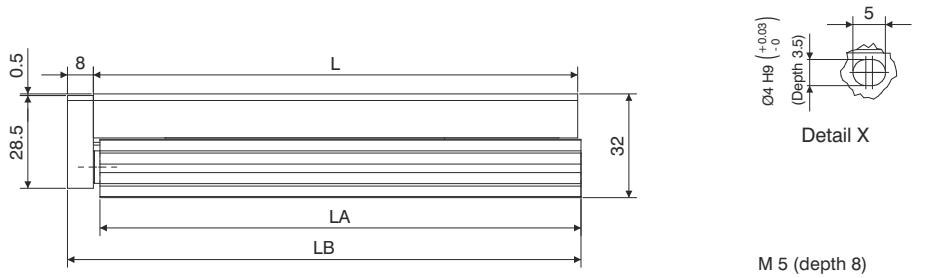

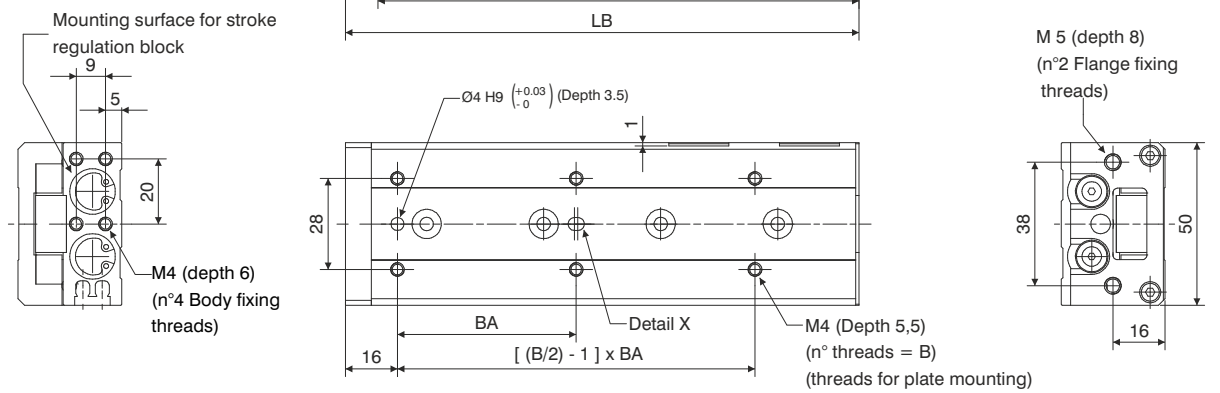

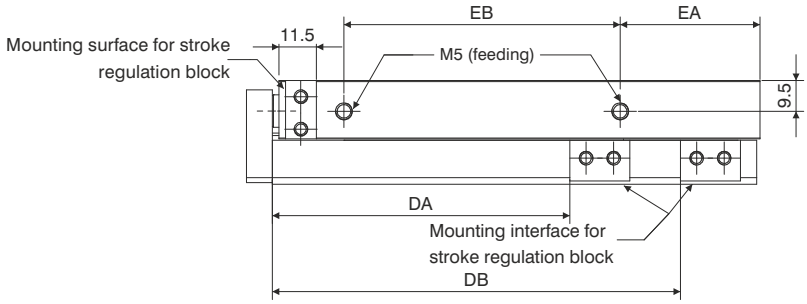

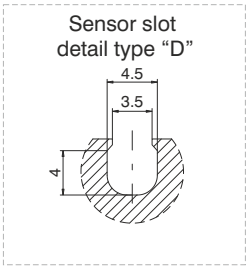

Table of dimensions

	Standard stroke						
	10	**20**	**30**	**40**	**50**	**75**	**100**
B	4				6		
BA		35		50	35	55	65
C		2		3	3	4	5
CA		15		17	15	25	35
CB		40		25	36	36	38
DA	26,5	36,5	46,5	56,5	66,5	91,5	116,5
DB	/	/	/	/	/	125,5	179,5
FA		15		42	51	61	111
FB		40		25	36	72	76
EA	10				22	43	52
EB		40		52	60	85	130
L		71		83	103	149	203
LA		70		82	102	148	202
LB		80		92	112	158	212
Weight (gr.)		325		385	480	660	890

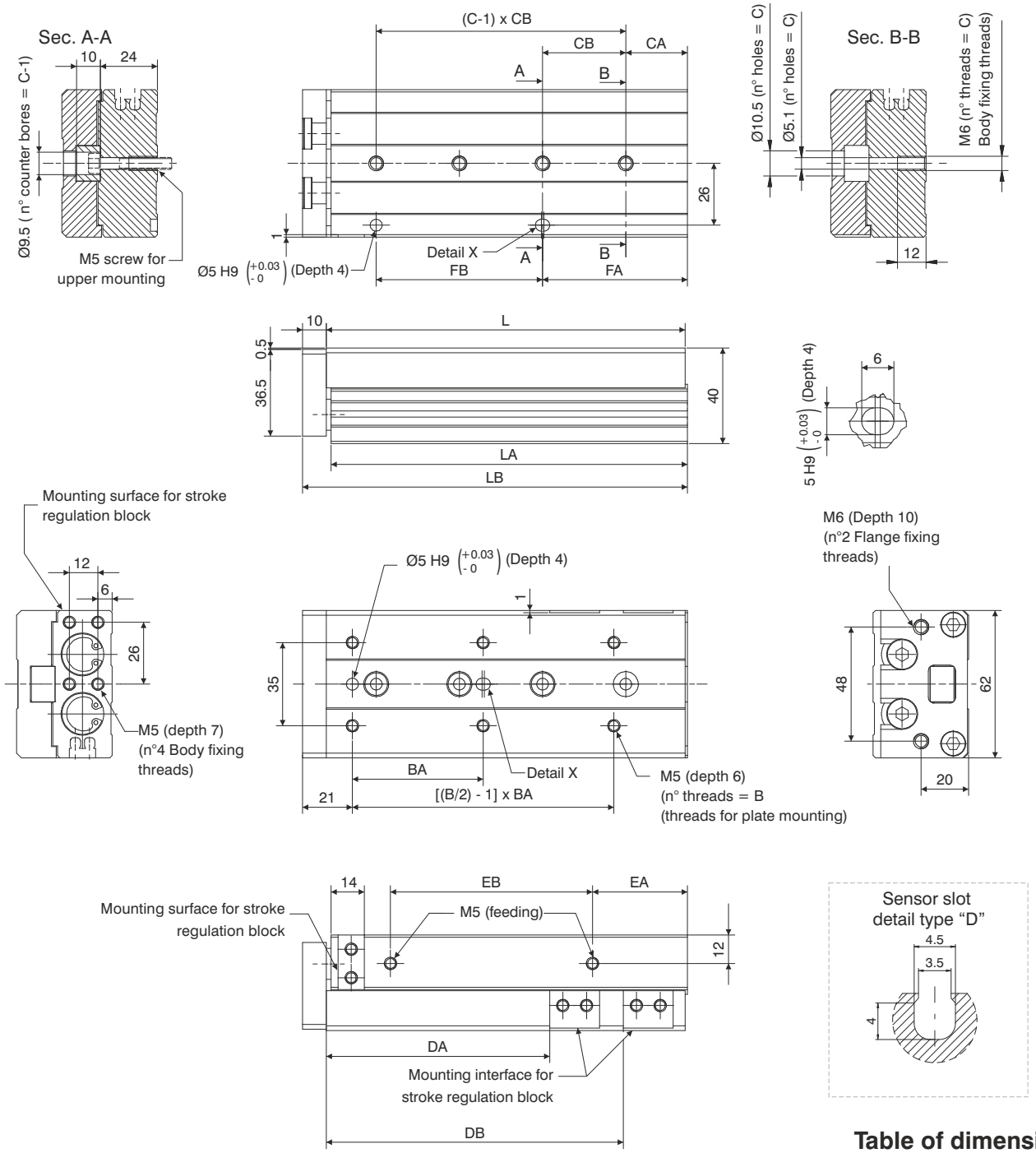

Table of dimensions

	Standard stroke							
	10	**20**	**30**	**40**	**50**	**75**	**100**	**125**
B	4	4	4	4	6	6	6	8
BA	35	35	35	40	30	55	65	70
C	2	2	2	2	3	4	5	7
CA	16	16	16	16	21	26	39	19
CB	40	40	40	50	30	35	35	35
DA	29	39	49	59	69	94	119	144
DB	/	/	/	/	/	125	173	223
FA	16	16	16	16	51	61	109	159
FB	40	40	40	50	30	70	70	70
EA	10	10	10	10	15	40	55	68
EB	40	40	40	50	60	85	118	155
L	76	76	76	86	101	151	199	249
LA	75	75	75	85	100	150	198	248
LB	87	87	87	97	112	162	210	260
Weight (gr.)	570	570	580	640	760	1090	1370	1700

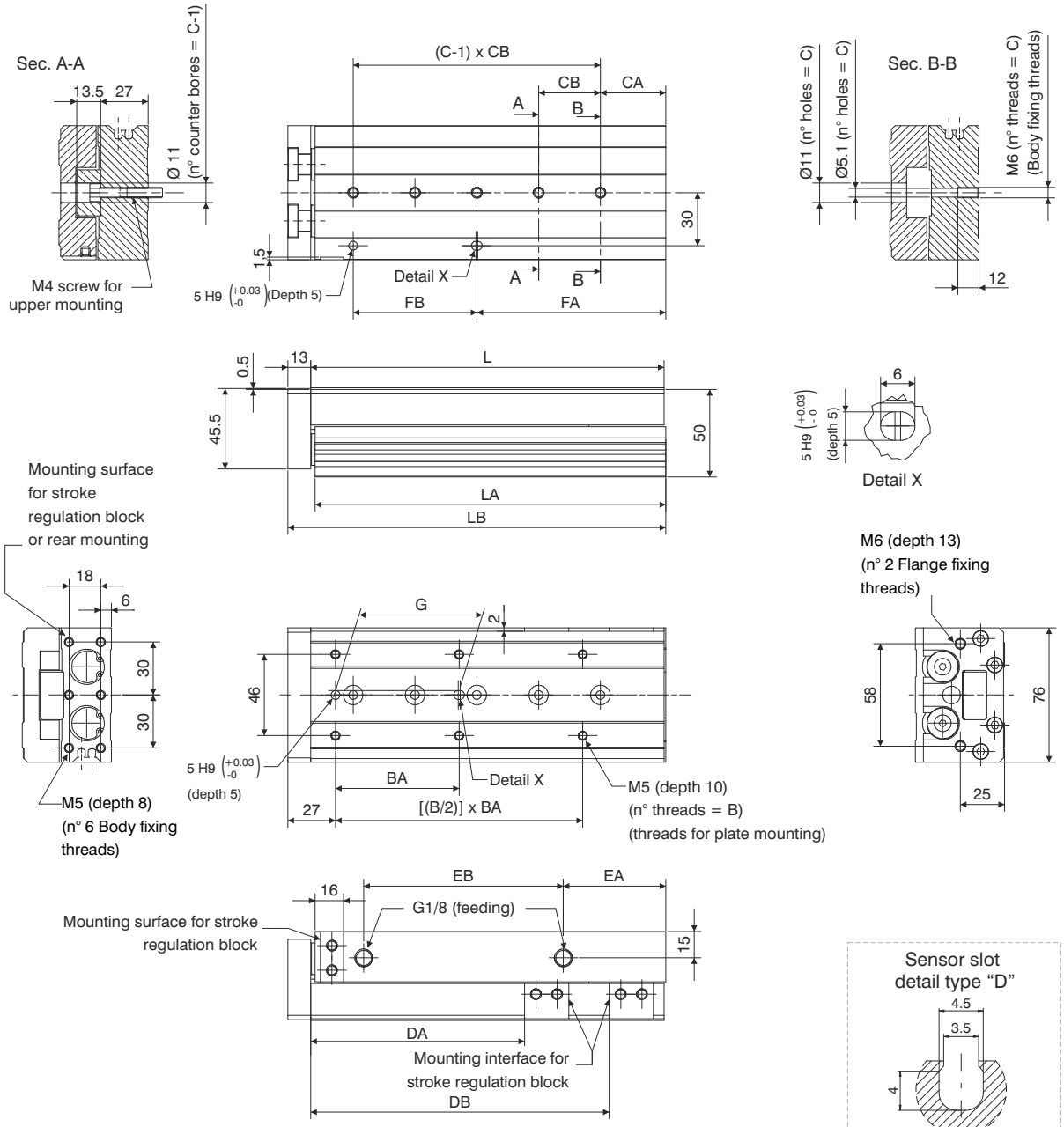

Table of dimensions

	Standard stroke								
	10	**20**	**30**	**40**	**50**	**75**	**100**	**125**	**150**
B	4	4	4	4	6	6	6	8	8
BA	50	50	50	60	35	60	70	70	80
C	2	2	2	2	3	4	5	6	7
CA	15	15	15	15	15	19	37	41	19
CB	45	45	45	55	35	35	35	38	44
DA	31	41	51	61	71	96	121	146	171
DB	/	/	/	/	/	/	169	223	275
EA	10	10	10	10	10	10	58	70	87
EB	44	44	44	54	69	108	113	155	190
FA	25	25	25	35	50	54	107	155	195
FB	35	35	35	35	35	70	70	76	88
G	40	40	40	50	35	60	70	70	80
L	83	83	83	93	108	147	200	254	306
LA	81,5	81,5	81,5	91,5	106,5	145,5	198,5	252,5	304,5
LB	97	97	97	107	122	161	214	268	320
Weight (gr.)	960	980	1010	1100	1250	1630	2150	2670	3190

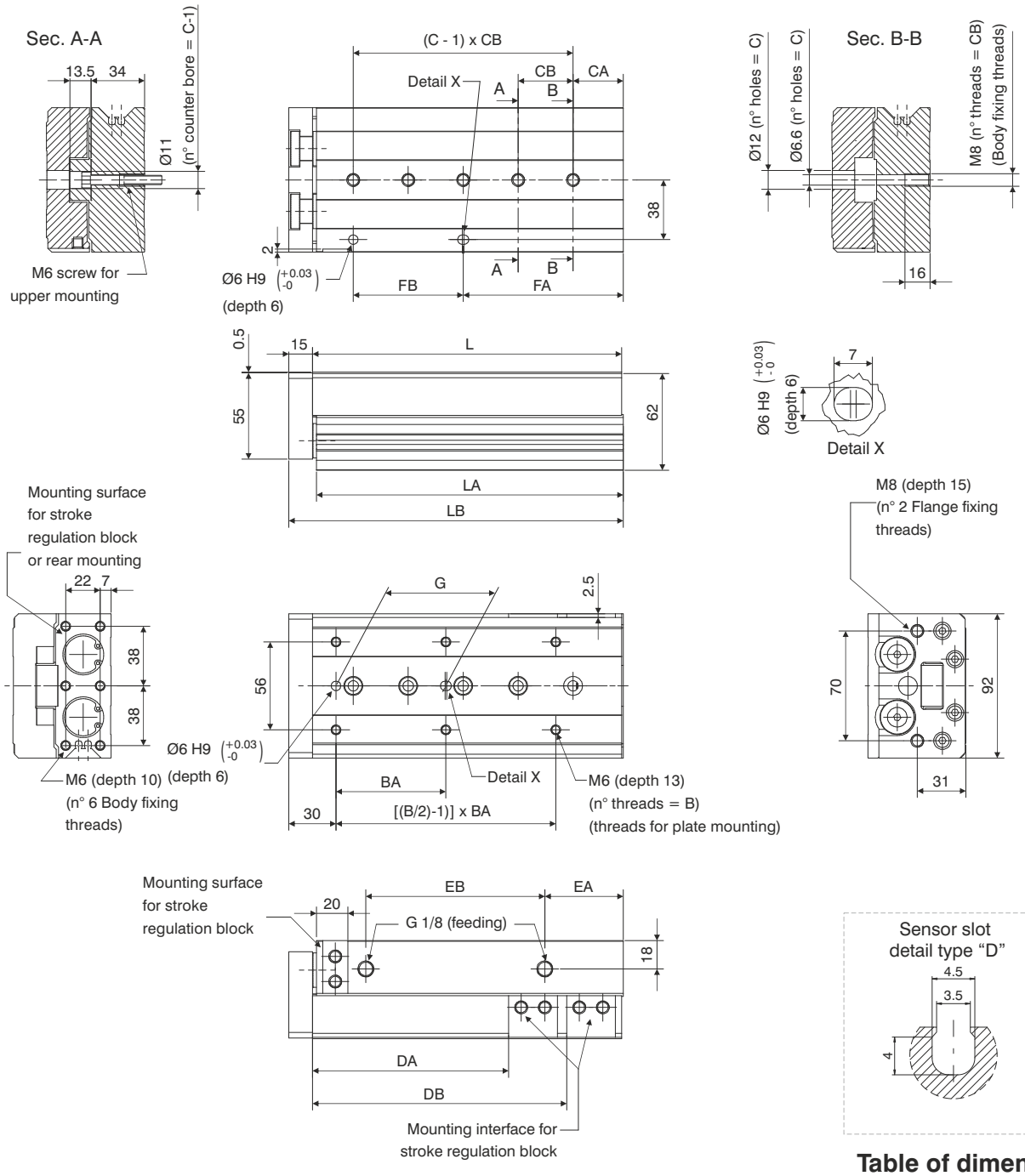

Table of dimensions

	Standard stroke								
	10	**20**	**30**	**40**	**50**	**75**	**100**	**125**	**150**
B	4	4	4	4	6	6	6	8	8
BA	50	50	50	60	35	60	70	75	80
C	2	2	2	2	3	4	5	6	7
CA	22	22	22	22	20	26	32	40	30
CB	45	45	45	55	35	35	35	38	40
DA	35	45	55	65	75	100	125	150	175
DB	/	/	/	/	/	/	162	218	258
EA	12	12	12	12	12	33	50	67	82
EB	47	47	47	57	70	90	114	155	180
FA	22	22	22	22	55	61	102	154	190
FB	45	45	45	55	35	70	70	76	80
G	40	40	40	50	35	60	70	75	80
L	92	92	92	102	115	156	197	255	295
LA	90,5	90,5	90,5	100,5	113,5	154,5	195,5	253,5	293,5
LB	108	108	108	118	131	172	213	271	311
Weight (gr.)	1660	1680	1690	1840	2090	2650	3270	4140	4710

SIDE THREADED HOLES

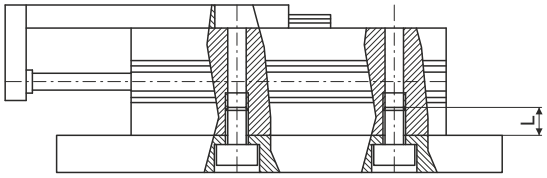

Bore	Screw	Torque (Nm)	Max. Lenght L (mm)
Ø8	M3	2,1	8
Ø12	M4	4,4	10
Ø16	M5	7,4	12
Ø20	M5	7,4	12
Ø25	M6	18	16

SIDE THROUGH HOLES

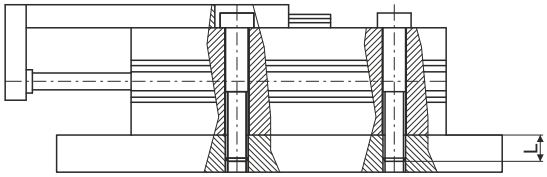

Bore	Screw	Torque (Nm)	Max. Lenght L (mm)
Ø8	M3	1,2	13
Ø12	M4	2,8	18,5
Ø16	M5	5,7	24
Ø20	M5	5,7	29
Ø25	M6	18	34

AXIAL THREADED HOLES

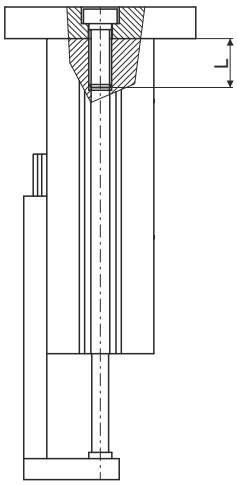

Bore	Screw	Torque (Nm)	Max. Lenght L (mm)
Ø8	M3	0,9	4
Ø12	M4	2,1	6
Ø16	M5	4,4	7
Ø20	M5	4,4	8
Ø25	M6	7,4	10

Mounting load

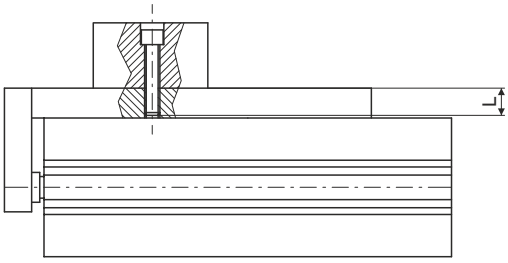

Bore	Screw	Torque (Nm)	Max. Lenght L (mm)
Ø8	M3	2,1	6
Ø12	M4	4,4	8
Ø16	M5	7,4	10
Ø20	M5	7,4	13
Ø25	M6	18	15

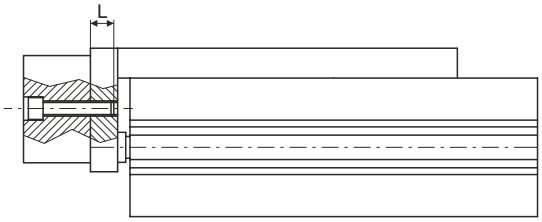

Bore	Screw	Torque (Nm)	Max. Lenght L (mm)
Ø8	M3	0,9	5
Ø12	M4	2,1	5,5
Ø16	M5	4,4	6
Ø20	M5	4,4	10
Ø25	M6	7,4	13

Kinetic energy (J)

Bore	With elastic bumper	With shock absorber
Ø8	0,027	See Dampers 6900
Ø12	0,055	
Ø16	0,11	
Ø20	0,16	
Ø25	0,24	

With front moment under static conditions completely extended and with load applied as indicated by the arrows.

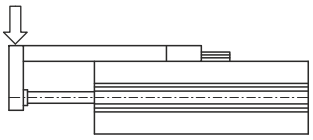

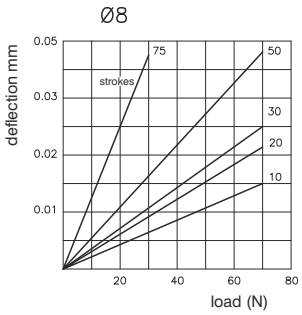

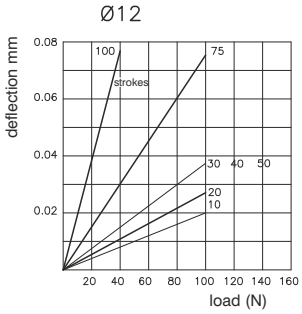

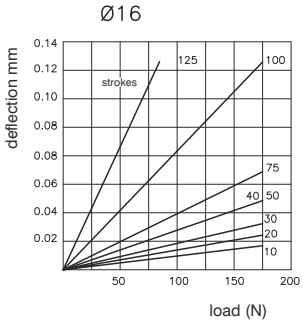

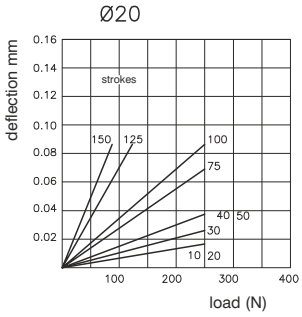

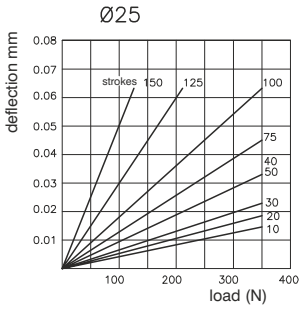

With side moment under static conditions completely extended and with load applied as indicated by the arrow

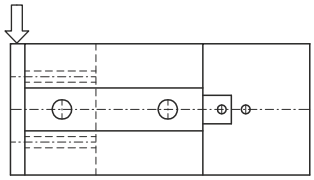

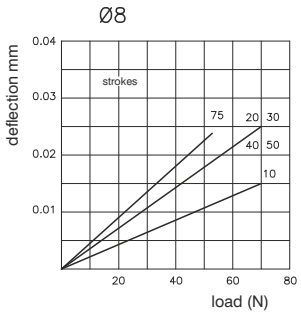

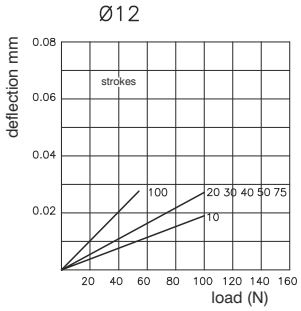

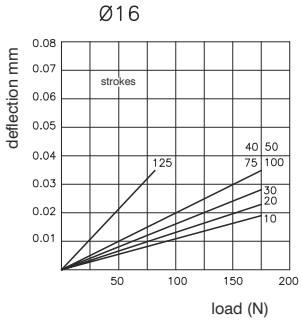

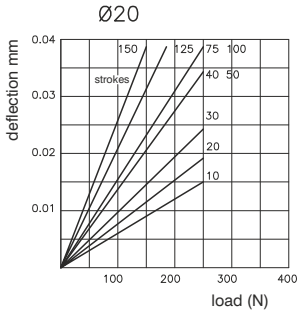

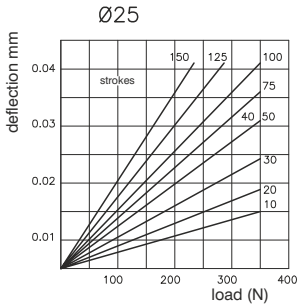

With misaligned side moment with load applied as indicated by the arrow at a distance “L” and with plate completely retracted.

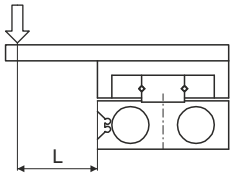

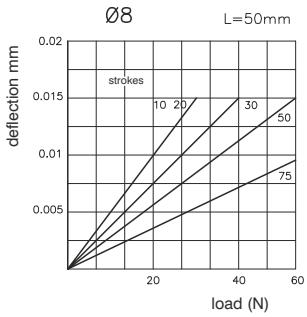

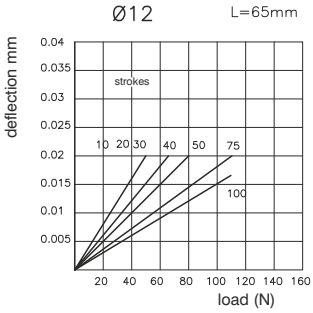

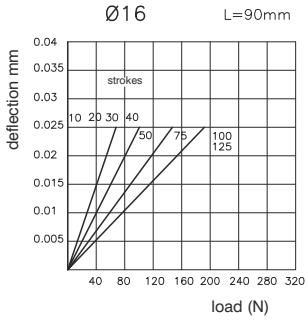

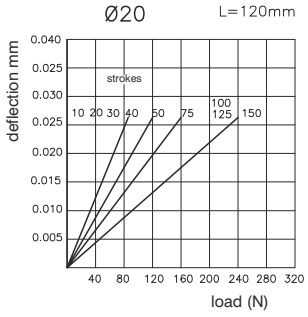

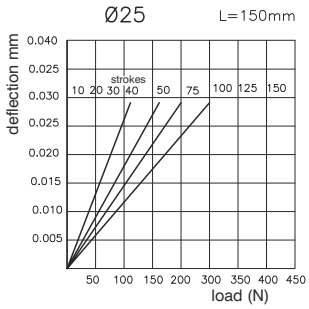

5

Dimensions with dampers

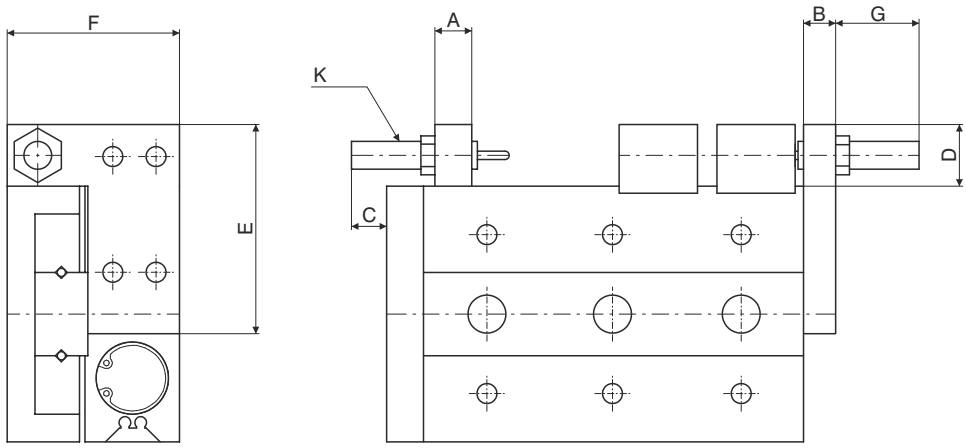

Dimensions with adjusting screw

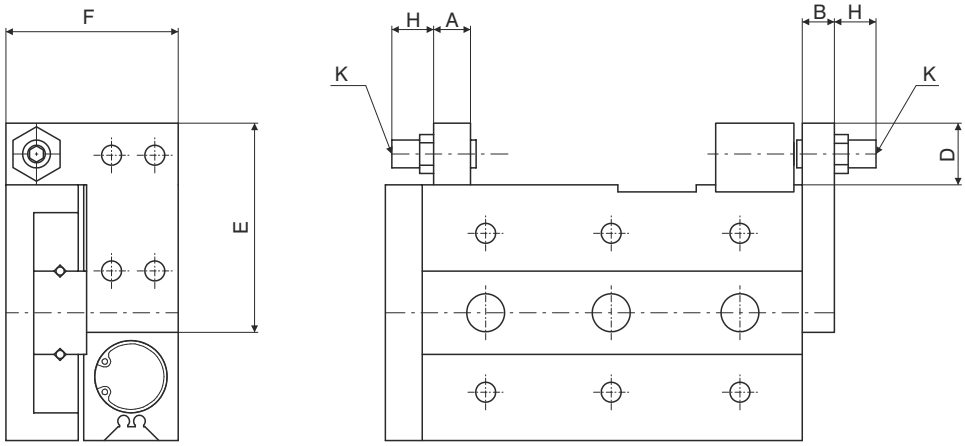

Bore	A	B	C	D	E	F	G max.	H max.	K
Ø8	7	8	26	14,5	38,5	23	25,5	28,5	M8x1
Ø12	9,5	8	21	15	45	31,5	24,5	32	M8x1
Ø16	11	10	19	18	55	37,5	29	34,5	M10x1
Ø20	13	12	28	24,5	70	47,5	42,5	35,5	M14x1,5
Ø25	16	15	34	24,5	80	54,5	39,5	37,5	M14x1,5

Shock absorber mounting block / front stroke adjusting screw

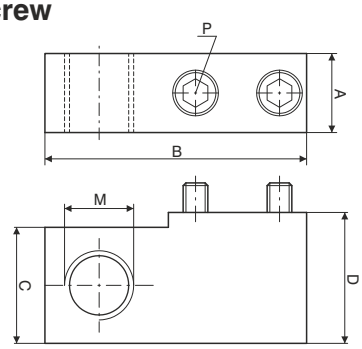

Bore	A	B	C	D	M	P
Ø8	7	23	14	15.5	M8x1	M3x16
Ø12	9.5	31	14.5	16		M4x16
Ø16	11	37	17.5	19	M10x1	M5x18
Ø20	13	45.5	23.5	26	M14x1.5	M6x25
Ø25	16	53.5		26.5		M8x25

Ordering code
6600.Ø.SU

Reference block

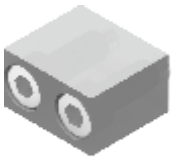

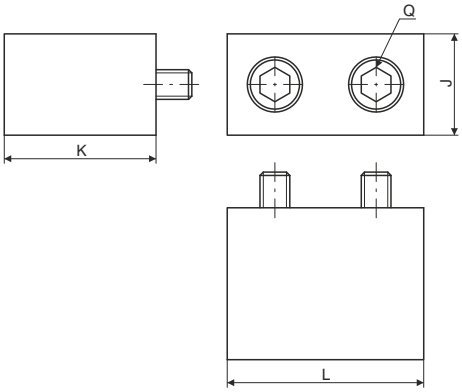

Bore	J	K	L	Q
Ø8	7	15.5	14.6	M3x16
Ø12	10	15	18.5	M4x14
Ø16	12	18.5	21	M5x18
Ø20	13	25.5	25	M6x25
Ø25	17		31	M8x25

Ordering code
6600.Ø.SI

Shock absorber mounting block / rear stroke adjusting screw

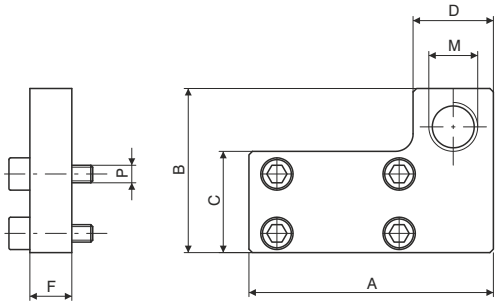

Bore	A	B	C	D	F	M	P
Ø8	38	23	12.5	14	8	M8x1	M3x12
Ø12	45	31	18				M4x12
Ø16	55	37	23.5	16	10	M10x1	M5x14
Ø20	70	47	29	23	12	M14x1.5	M5x16
Ø25	80	54	35		15		M6x20

Ordering code
6600.Ø.SR

Adjusting screw

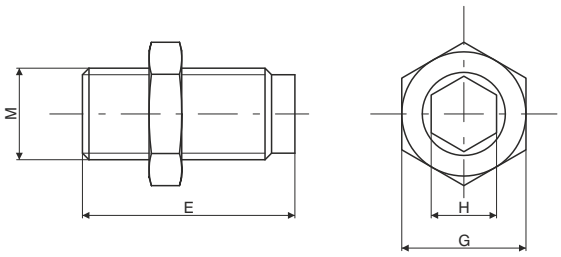

Bore	E	G	H	M
Ø8	36.5	12	4	M8x1
Ø12	40			
Ø16	44.5	14	5	M10x1
Ø20	47.5	19	6	M14x1.5
Ø25	52.5			

Ordering code
6600.Ø.VR

Ordering code

6700.Ø.stroke

- 10
- 16
- 20

Construction characteristics

Body	anodised aluminium
Piston rod	stainless steel
Piston	aluminium
Piston rod bushing	aluminium
End plate	anodised aluminium
Seals	oil resistant NBR rubber
Table	anodised aluminium

Technical characteristics

Fluid	filtered and preferably lubricated air or not (If lubricated the lubrication must be continuous)
Working pressure	1.2 - 7 bar
Working temperature	-5°C - +70°C
Cushioning	with elastic bumper

Standard strokes

	Stroke								
Bore	5	10	15	20	25	30	40	50	60
Ø10	●	●	●	●	●	●	●	●	●
Ø16	●	●	●	●	●	●	●	●	●
Ø20	●	●	●	●	●	●	●	●	●

Theoretical force

Bore	Effective Area (mm²)		Force (N)					
Ø10	Out	28.3	5.7	8.5	11.3	14.2	17	19.8
	In	21.2	4.2	6.4	8.5	10.6	12.7	14.8
Ø16	Out	78.5	15.7	23.6	31.4	39.3	47.1	55
	In	66	13.2	19.8	26.4	33	39.6	46.2
Ø20	Out	314	62.8	94.2	125.6	157	188.4	219.8
	In	264	52.8	79.2	105.6	132	158.4	184.8
			2	3	4	5	6	7
			Working pressure(bar)					

Overall dimensions - Ø10

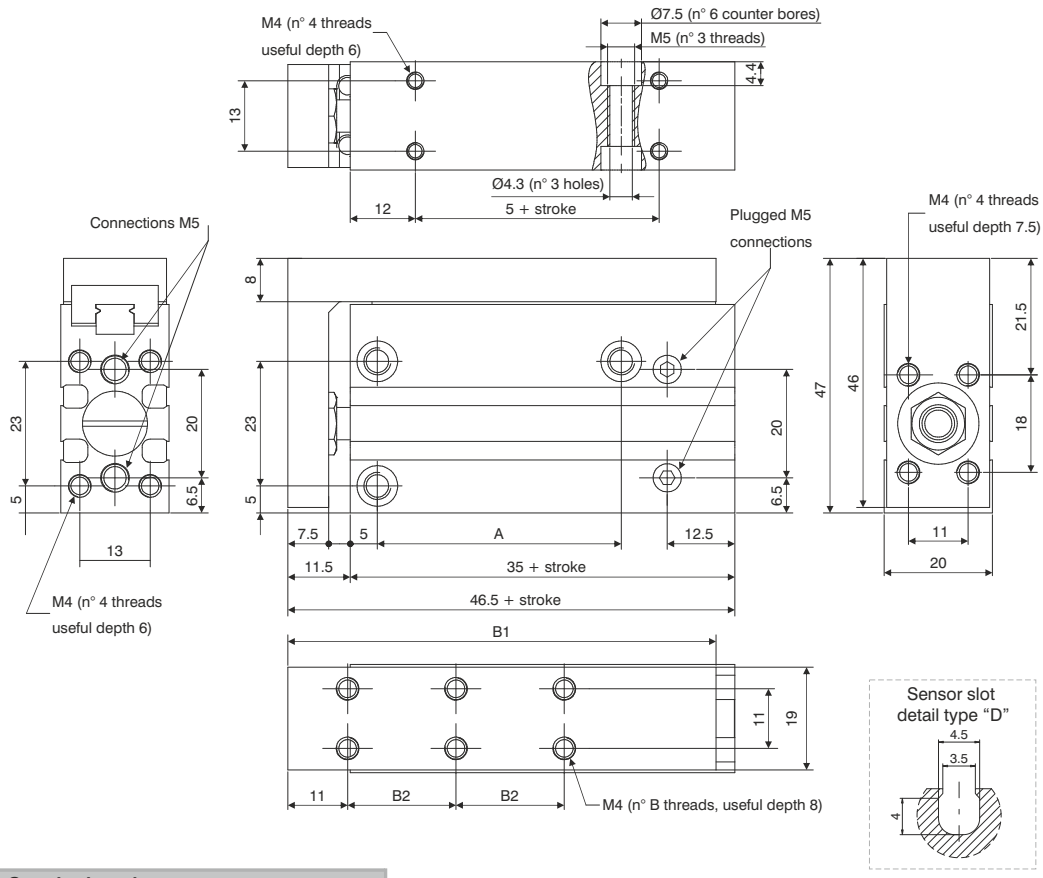

Table of dimensions

	Standard strokes								
	5	10	15	20	25	30	40	50	60
A	14		24		30		45	45	60
B1	49		59		69		79	79	99
B2	10		20		30		20	20	30
B	4						6		
Weight (gr.)	117	125	140	148	162	170	192	215	238

Overall dimensions - Ø16

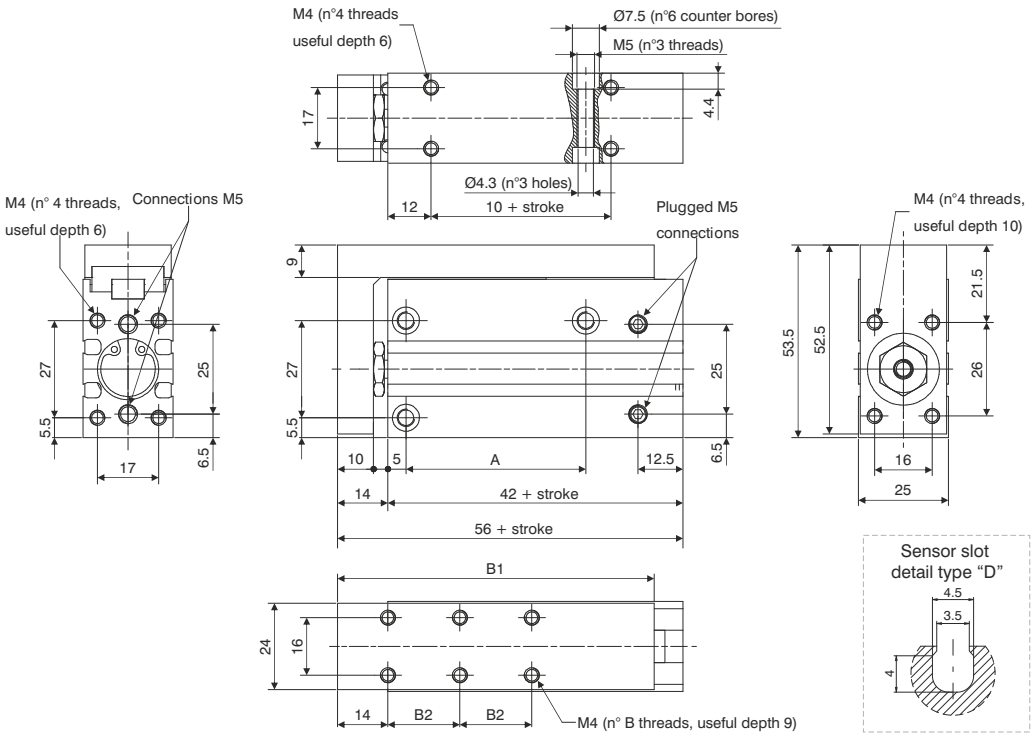

Table of dimensions

	Standard strokes								
	5	10	15	20	25	30	40	50	60
A	20		30		40		50	60	
B1	58		68		78		88	98	108
B2	10		20		30		20	25	30
B	4						6		
Weight (gr.)	215	230	250	260	280	290	325	350	390

Overall dimensions - Ø20

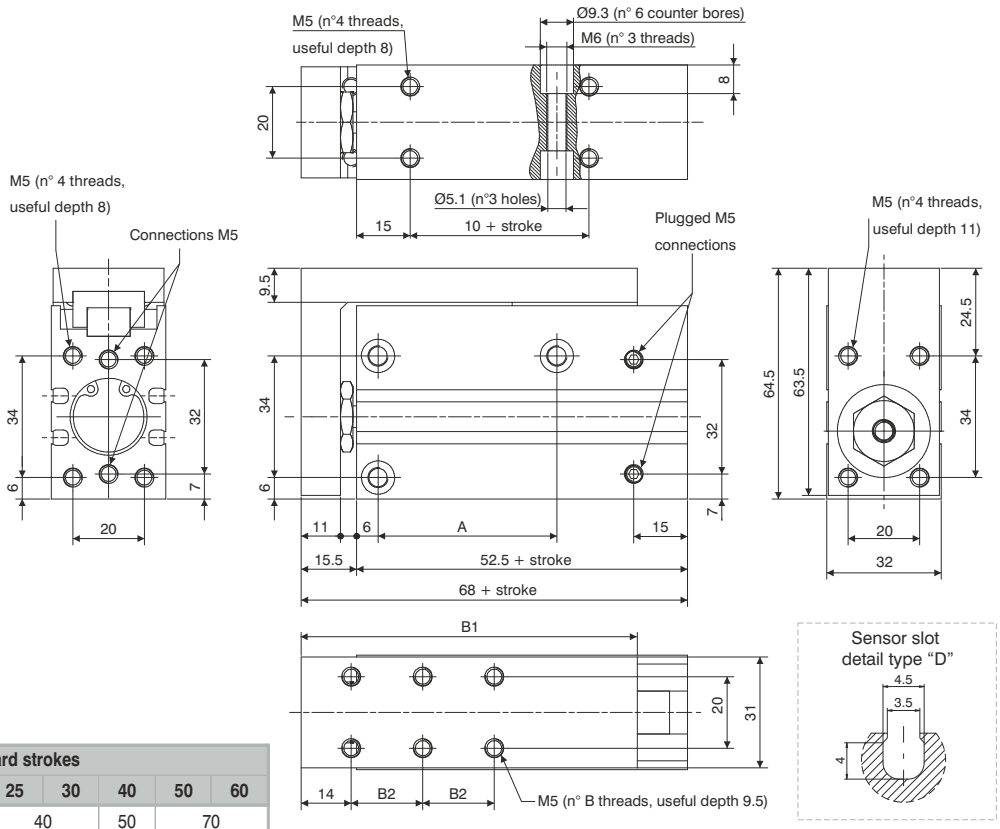

Table of dimensions

	Standard strokes								
	5	10	15	20	25	30	40	50	60
A	20		25		40		50	70	
B1	64		74		84		94	104	114
B2	10		20		30		20	25	30
B	4						6		
Weight (gr.)	440	455	490	505	540	560	600	660	700

LATERAL (THROUGH SCREW)

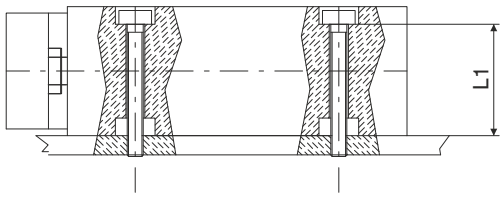

	SCREW	Maximum torque (Nm)	L1
Ø10	M4	2.5	15.6
Ø16	M4	2.5	20.6
Ø20	M5	5.1	24

LATERAL (THREADED HOLE)

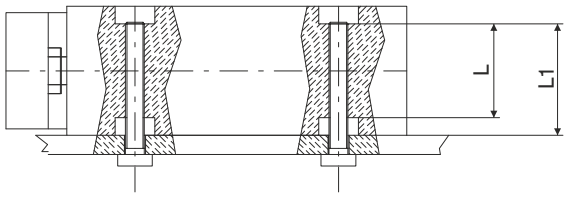

	SCREW	Maximum torque (Nm)	L1	L
Ø10	M5	5.1	15.6	11.2
Ø16	M5	5.1	20.6	16.2
Ø20	M6	8.1	24	16

VERTICAL (THREADED HOLE)

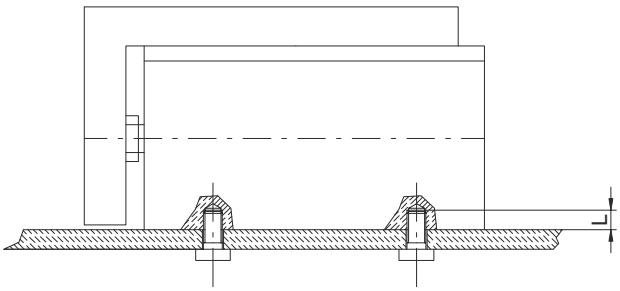

	SCREW	Maximum torque (Nm)	L
Ø10	M4	2.5	6
Ø16	M4	2.5	6
Ø20	M5	5.1	8

AXIAL (THREADED HOLE)

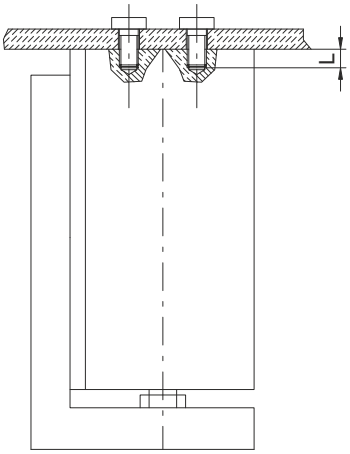

	SCREW	Maximum torque (Nm)	L
Ø10	M4	2.5	6
Ø16	M4	2.5	6
Ø20	M5	5.1	8

LOAD

FRONTAL MOUNTING

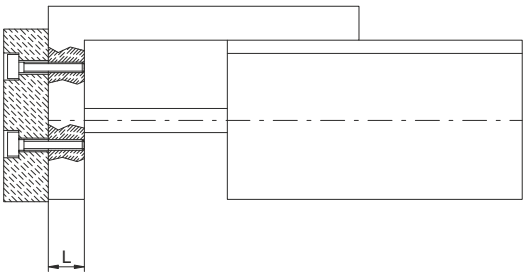

	SCREW	Maximum torque (Nm)	L
Ø10	M4	2.5	7.5
Ø16	M4	2.5	10
Ø20	M5	5.1	11

BACK MOUNTING

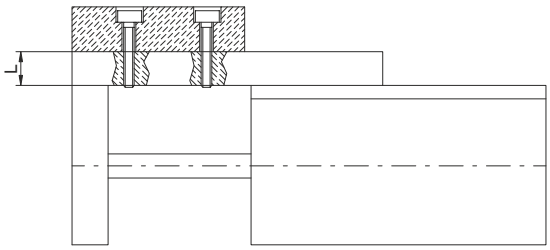

	SCREW	Maximum torque (Nm)	L
Ø10	M4	2.5	8
Ø16	M4	2.5	9
Ø20	M5	5.1	9.5

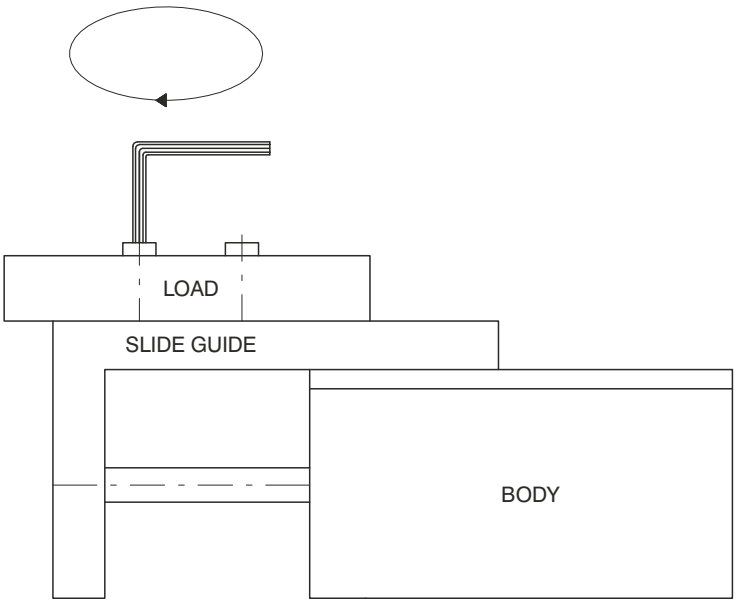

ATTENTION : Slide must be blocked before fixing the load
this operation shoul not be done by blocking the body as the
guide could get damaged.

CONNECTION BETWEEN PLATE AND ROD

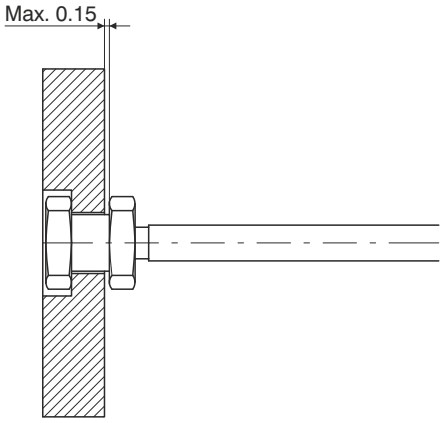

The fluctuating connection, maximum clearence 0.15mm as indicated by the arrow

Plate deviation (arrow) when the load is applied on the spot indicated with the arrow and the unit completely extended

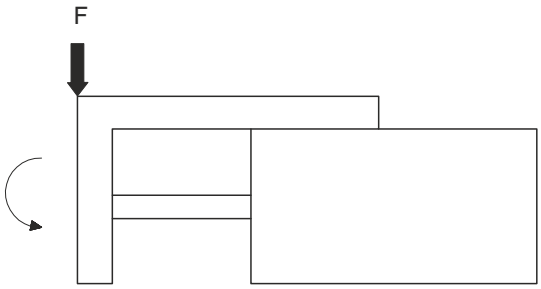

Plate deviation (arrow) when the load is applied on the spot indicated with the arrow and the unit completely extended

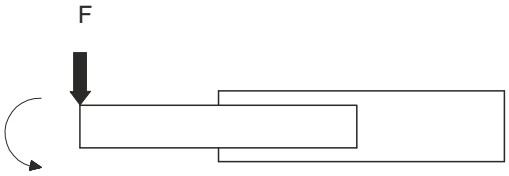

Ø10

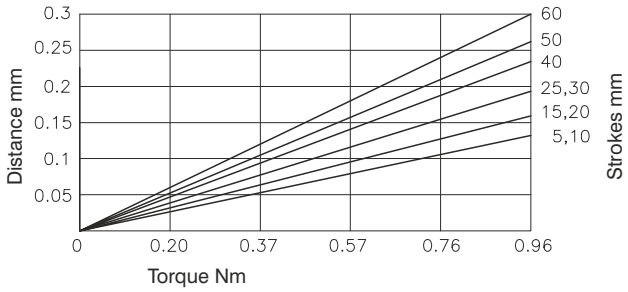

Ø10

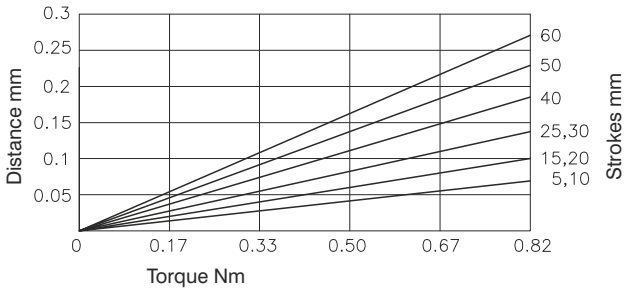

Ø16

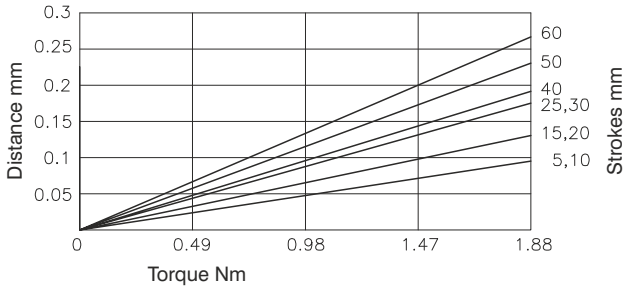

Ø16

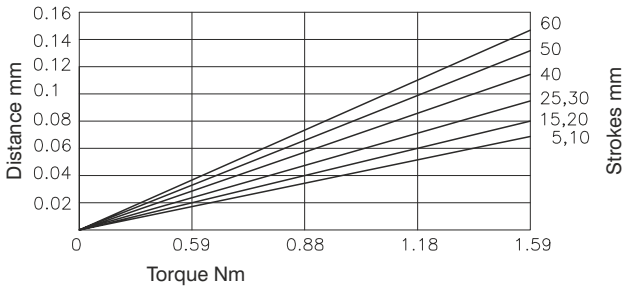

Ø20

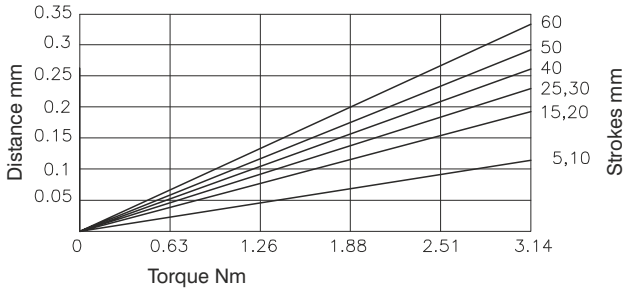

Ø20

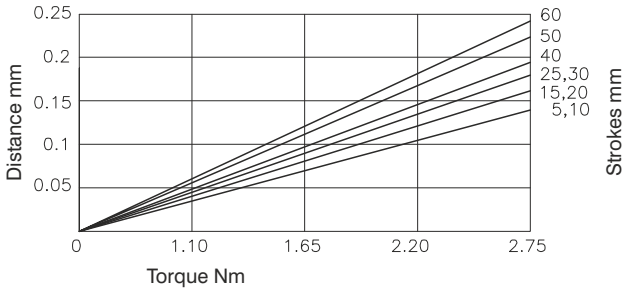

Plate deviation (compared to A) when the load is applied on the spot indicated with the arrow and the unit completely extended

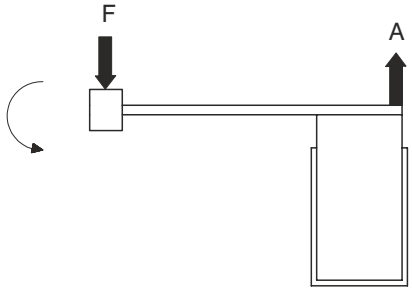

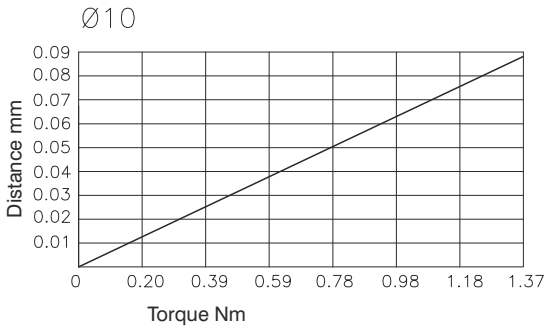

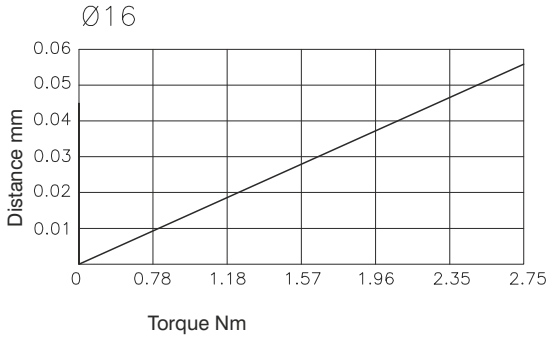

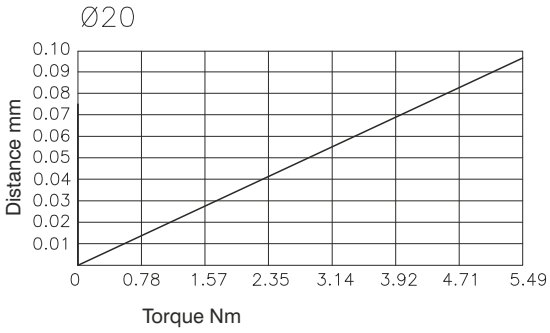

MOUNTING POSITION	VERTICAL			HORIZONTAL								
	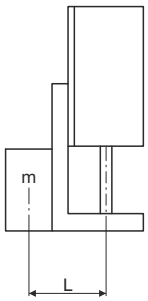			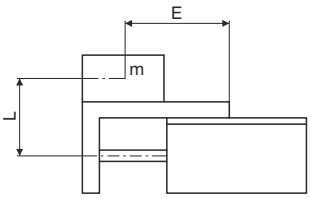								
MAX. SPEED (mm/sec.)	100	200	300	100			200			300		
Load eccentricity				50	100	200	50	100	200	50	100	200
Selection graphs	1	2	3	4	5	6	7	8	9	10	11	12

Selection graphs 1 - 3 (vertical mounting)

Drawing 1
Maximum speed 100 mm/s or lower

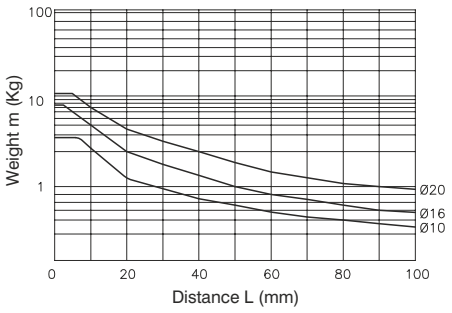

Drawing 2
Maximum speed 300 mm/s or lower

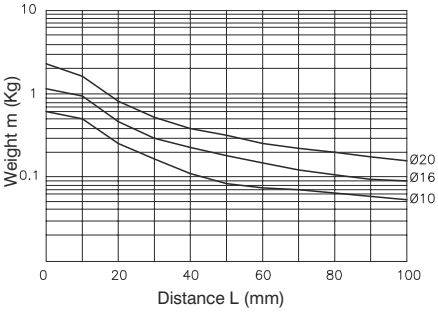

Drawing 3
Maximum speed 500 mm/s or lower

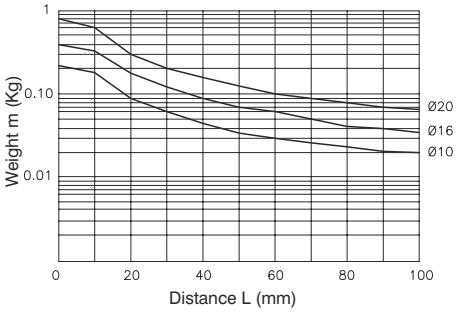

5

Selection graphs 4 - 12 (horizontal mounting)

Drawing 4 load eccentricity 50mm
Maximum speed 100 mm/s or lower

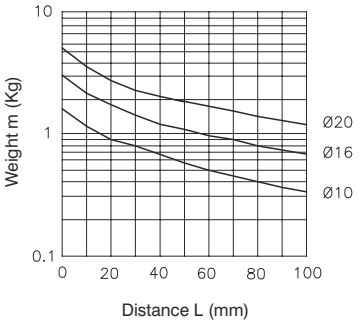

Drawing 7 load eccentricity 50mm
Maximum speed 300 mm/s or lower

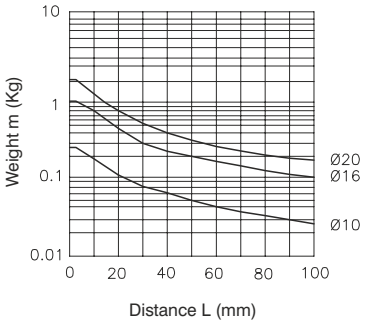

Drawing 10 load eccentricity 50mm
Maximum speed 500 mm/s or lower

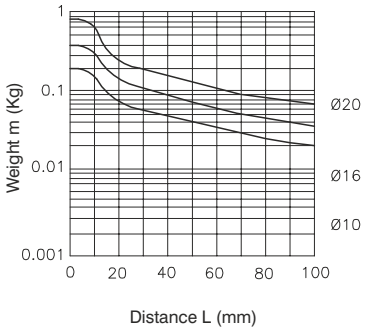

Drawing 5 load eccentricity 100mm
Maximum speed 100 mm/s or lower

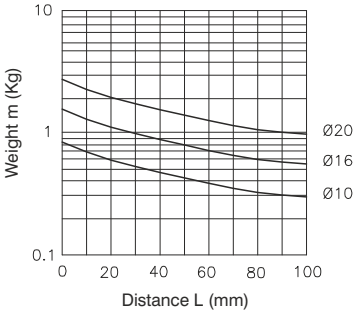

Drawing 8 load eccentricity 100mm
Maximum speed 300 mm/s or lower

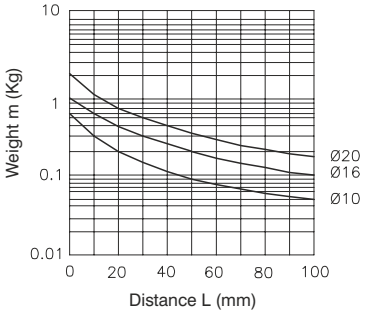

Drawing 11 load eccentricity 100mm
Maximum speed 500 mm/s or lower

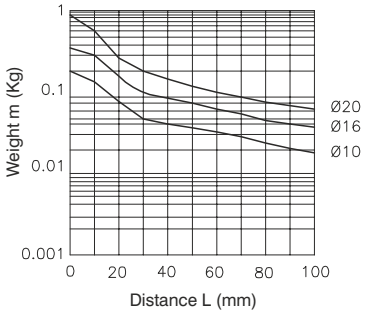

Drawing 6 load eccentricity 200mm
Maximum speed 100 mm/s or lower

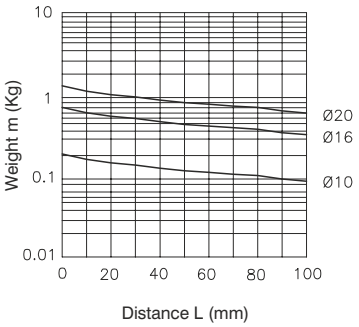

Drawing 9 load eccentricity 200mm
Maximum speed 300 mm/s or lower

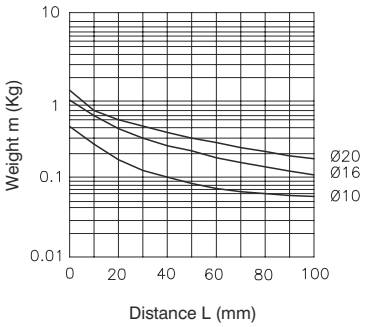

Drawing 12 load eccentricity 200mm
Maximum speed 500 mm/s or lower

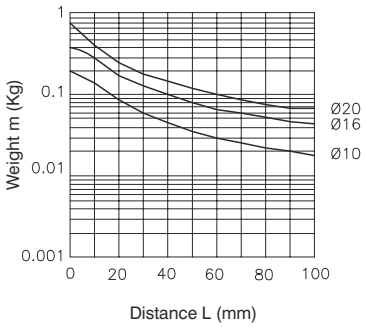

Ordering code

6900.__

- A = Thread M8x1
- B = Thread M10x1
- C = Thread M14x1.5
- D = Thread M20x1.5
- E = Thread M27x1.5

Technical characteristics

Code	Max. power (Nm)		Return force	Operating temperature	Weight
	For cicle	For hour			
6900.A	4	14400	2,5 ÷ 6 N	-20°C ÷ 80°C	10 gr.
6900.B	15	24000	3,6 ÷ 8 N		20 gr.
6900.C	30	50000	13 ÷ 23 N		50 gr.
6900.D	100	76500	12 ÷ 23 N		140 gr.
6900.E	390	175500	14 ÷ 31 N		340 gr.

Overall dimensions

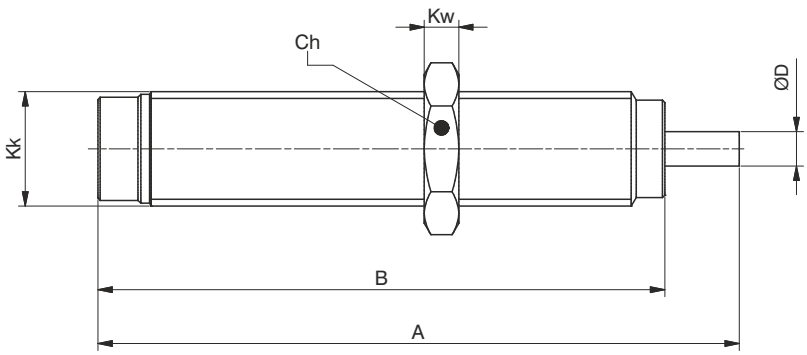

Table of dimensions

Code	A	B	Ch	D	Kk	Kw
6900.A	51	44	11	2,5	M8x1	3
6900.B	56	49,5	13	3	M10x1	3
6900.C	79	69	17	4	M14x1,5	5
6900.D	107	88	24	6	M20x1,5	6
6900.E	126,5	108,5	30	8	M27x1,5	8

MAGNETIC SENSORS FOR CYLINDERS

Magnetic sensors REED type with cable

Magnetic sensors REED type for connector

Magnetic sensors HALL effect with cable

Magnetic sensors HALL effect for connector

Miniaturized magnetic sensors

- rectangular profile
- oval profile
- round profile
- round section 90° cable

General

The limit switches, or magnetic sensors, have to be mounted on cylinders with magnetic piston. These, when hit by the magnetic field generated by the piston as it approaches, close the circuit sending an electrical signal by relè solenoid valve control, etc. or converse with the controlling electronic system situaded on the machine. There are available magnetic sensor with ampulla Reed type and with Hall effect. The sensors are attached to the cylinder by a proper clamp, slot or adaptator and have an activation LED indicator.

Note: The magnetic sensors are according to the Directive **EMC 89**/**336**/**CEE** and following amendments.

Instruction on how to use the sensors properly

Particular attention should be paid in order not to exceed the wide operating limits shown into the next pages. Besides, the 2 wires sensors have never to be connected to the mains if a load has not been yet connected in series.These are the only cares that, if not followed, may cause damages to the sensor. Furthermore it has to be considered that, while loading, the current absorbed by the sensors might be 50% higher that the rated one.
The switch semiconductor construction design makes this sensors extremely compatible, there are no limitation to the type of load applied : inductive, capacitive resistive.
In case of direct current (DC) feeding, the polarity of the connection has to be observed: the brown cable must be connected to the plus (+) and the blue one to the minus (-). The cable length must not exceed 10mtrs. If the cable needs to be longer then 10 mt, we recommend to insert in series an inductance or a resistance to counteract the capacity generated by the cable itself .
When using a two wire REED type sensor always ensure that the correct load is applied in series on any of the two wires. When using a sensor fitted with the SNAP connector pay attention to the orientation of the connector (see fig. page 6.3) because by inverting the connection the circuit will not be damaged, but the LED will not turn on. In case of two or more sensors connected in series pay attention to tension drop generated (around 3V for each sensor), and eventually use the version designed for in series connection. The Hall effect sensors, which do not include any moving mechanical parts are longer lasting if compared to the Reed version besides, there are some other external factors to be taken into consideration, such as proximity of powered cables, magnetic fields produced by electric motors, mass of iron too close to the sensor, and so on: these factors have to be therefore carefully avoided, being able to influence the sensors and accordingly to cause irregularity of operation.

Slot detail
type “A”

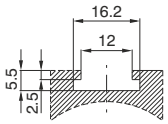

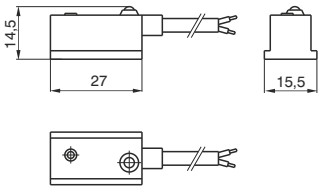

for cylinders and microcylinders

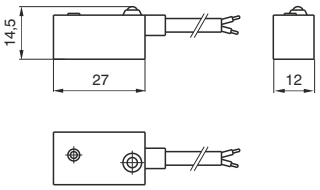

for rodless cylinders

Diagrams and connections

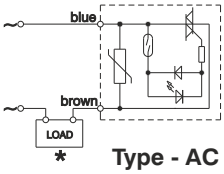

Type - AC

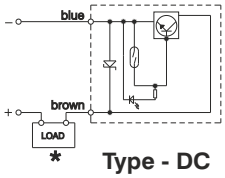

Type - DC

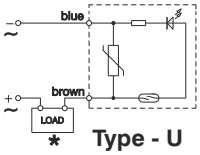

Type - U

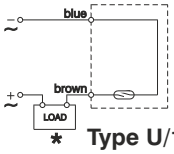

Type U/1

Ordering code

SENSORS WITH 2 WIRES CABLE (PUR Ø4.2 mm 2 x 0.34mm²)

Cylinders and microcylinders	**1500.AC**	sensor for alternating current with led
	1500.DC	sensor for continuous current with led
	1500. U	universal sensor with led
	1500.U/1	universal sensor without led (REED ampulla only)
Rodless cylinders	**1600.AC**	sensor for alternating current with led
	1600.DC	sensor for continuous current with led
	1600.U	universal sensor with led
	1600.U/1	universal sensor without led (REED ampulla only)

Technical characteristics	A.C.	D.C.	U		U/1	
			a.c.	d.c.	a.c.	d.c.
Maximum permanent current	1,5A	1,2A	0,5A		0,3A	
Maximum current (pulses of 0,5 sec.)	6A	1,5A	1A		0,8A	
Voltage range	12 - 230V	12 - 30V	3 - 230V	12 - 48V	0 - 230V	0 - 48V
Maximum permanent power	375VA	32W	20VA	15W	10VA	8W
Working temperature	-20° C - 70°C					
Maximum voltage drop	3V max	2V max	3V max		0V	
Cable section	2x0,34 mm² Ø4,2 mm PUR					
Degree of protection	IP 65					
Connecting time	2 ms					
Disconnecting time	1 ms					
Average working period	10^7 cicles					
Repetition of intervention point	± 0,1 mm					
Type of contact	N.O.					

✱The load (LOAD) can be connected either to negative or positive pole.

These sensors can be used on cylinders series:

SERIES	DESCRIPTION	MOUNTED
1200	for microcylinders with threaded end covers and “TECNO-MIR” microcylinders	with clamps code 1260.Ø.F
	for microcylinders "MIR" with rolled end covers, cylinders from Ø16 to Ø32	with clamps code 1280.Ø.F
	for microcylinders "MIR-INOX" with rolled end covers	with clamps code 1280.Ø.FX
1306 - 1307 - 1308	for cylinders from Ø32 to Ø63	with brackets code 1306.A
	for cylinders from Ø80 to Ø125	with brackets code 1306.B
	for cylinders from Ø160 to Ø200	with brackets code 1306.C
1315	for cylinders Ø250 and Ø320 (ISO)	with brackets code 1306.D
1319 - 1320	for cylinders Ø32 and Ø40	with brackets code 1320.A
	for cylinders Ø50 and Ø63	with brackets code 1320.B
	for cylinders Ø80 and Ø100	with brackets code 1320.C
	for cylinders Ø125	with brackets code 1320.D
	for cylinders Ø160	with brackets code 1320.E
	for cylinders Ø200	with brackets code 1320.F
1390 - 1391	for cylinders ECOLIGHT Ø32 and Ø40	with brackets code 1390.A
	for cylinders ECOLIGHT Ø50 and Ø63	with brackets code 1390.B
	for cylinders ECOLIGHT Ø80 and Ø100	with brackets code 1390.C
	for cylinders ECOLIGHT Ø125 - Ø200	with brackets code 1390.D
1500	Compact cylinders "Europe" (from Ø32)	directly on groove
1605	Rodless cylinders	with brackets code 1600.A

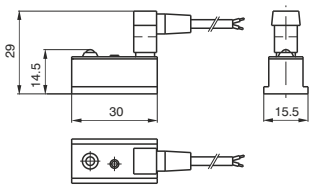

for cylinders and microcylinders

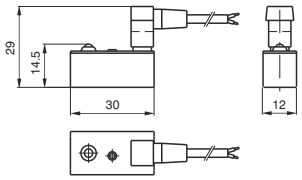

for rodless cylinders

Slot detail type "A"

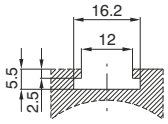

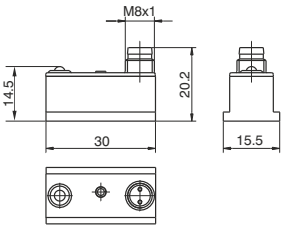

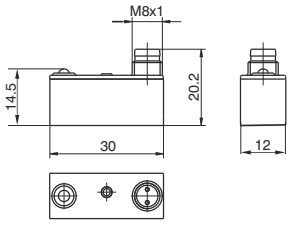

Ordering code

2 PIN SENSOR FOR SNAP CONNECTOR

Cylinders and microcylinders	**RS.DC**	sensor for continuous current with led normally open N.O.
	RS.UA	universal sensor with led normally open N.O.
	RS.UC	universal sensor with led normally closed N.C.
	RS.UA/1	universal sensor without led N.O. (REED ampulla only)
Rodless cylinders	**SRS.DC**	sensor for continuous current with led normally open N.O.
	SRS.UA	universal sensor with led N.O.
	SRS.UC	universal sensor with led normally closed N.C.
	SRS.UA/1	universal sensor without led N.O.
Cable	**C1**	connector with 2.5 m. cable 2 wires (PVC Ø3,5 mm 2x 0,25mm^2)
	C2	connector with 5 m. cable 2 wires (PVC Ø3,5 mm 2x 0,25mm^2)
	C3	connector with 10 m. cable 2 wires (PVC Ø3,5 mm 2x 0,25mm^2)

2 PIN SENSOR FOR SNAP CONNECTOR + C1 CABLE TWO WIRES (PVC Ø3.5 mm 2x0.25 mm^2)

Cylinders and microcylinders	**RS.DCC1**	sensor for DC current N.O. with LED and 2.5 m. cable
	RS.UAC1	universal sensor with led N.O. with connector and 2.5 m. cable
	RS.UCC1	universal sensor with led N.C. with connector and 2.5 m. cable
	RS.UAC1/1	universal sensor without led N.O. with connector and 2.5 m. cable (REED ampulla only)
Rodless cylinders	**SRS.DCC1**	sensor for continuous current with led normally closed N.O. with connector and 2.5 m. cable
	SRS.UAC1	universal sensor with led N.O. with connector and 2.5 m. cable
	SRS.UCC1	universal sensor with led N.C. with connector and 2.5 m. cable
	SRS.UAC1/1	universal sensor without led N.O. with connector and 2.5 m. cable (REED ampulla only)

2 PIN SENSOR WITH M8 CONNECTOR

Cylinders and microcylinders	**RS8.DC**	sensor for DC current N.O. with LED and M8 plug
	RS8.UA	universal sensor N.O. with LED and M8 plug
	RS8.UC	universal sensor N.C. with LED and M8 plug
Rodless cylinders	**SRS8.DC**	sensor for DC current N.O. with LED and M8 plug
	SRS8.UA	universal sensor N.O. with LED and M8 plug
	SRS8.UC	universal sensor N.C. with LED and M8 plug
Cable	**MCH1**	cable 3 wires l=2.5m with M8 connector three wires (PUR Ø2.6 mm 3x 0.15 mm^2)
	MCH2	cable 3 wires l=5m with M8 connector three wires (PUR Ø2.6 mm 3x 0.15 mm^2)
	MCH3	cable 3 wires l=10m with M8 connector three wires (PUR Ø2.6 mm 3x 0.15 mm^2)

3 PIN SENSOR FOR SNAP CONNECTOR WITH TWO WIRES ACCORDING TO IEC 947 NORMS

Cylinders and microcylinders	**RS.DCNO**	sensor for continuous current with led normally open N.O., according to standard IEC 947
	RS.UANO	universal sensor with led normally open N.O., according to standard IEC 947
Cable	**C1NO**	connector with 2.5 m. cable, according to standard IEC 947 (PVC Ø3.5 mm 2x0.25 mm^2)
	C2NO	connector with 5 m. cable, according to standard IEC 947 (PVC Ø3.5 mm 2x0.25 mm^2)
	C3NO	connector with 10 m. cable, according to standard IEC 947 (PVC Ø3.5 mm 2x0.25 mm^2)

3 PIN SENSORS FOR IN SERIES ASSEMBLING WITH SNAP CONNECTOR

Cylinders and microcylinders	**RS.UA/1L**	universal sensor with led normally open N.O., for series assembly (3 wires)
Rodless cylinders	**SRS.UA/1L**	universal sensor with led N.O., for series assembly (3 wires)
Cable	**CH1**	connector with 2.5 m. cable 3 wires (PVC Ø3.5 mm 3x0.25 mm^2)
	CH2	connector with 5 m. cable 3 wires (PVC Ø3.5 mm 3x0.25 mm^2)
	CH3	connector with 10 m. cable 3 wires (PVC Ø3.5 mm 3x0.25 mm^2)

3 PIN SENSORS FOR IN SERIES ASSEMBLING WITH SNAP CONN. + CH1 CABLE 3 WIRES (PVC Ø3.5mm 3x0.25 mm^2)

Cylinders and microcylinders	**RS.UACH1/1L**	universal sensor with led N.O. with connector and 2.5 m. cable, for series mounting (3 wires)
Rodless cylinders	**SRS.UACH1/1L**	universal sensor with led N.O. with connector and 2.5 m. cable, for series assembly (3 wires)

3 PIN SENSORS FOR IN SERIES ASSEMBLING WITH M8 CONNECTOR

Cylinders and microcylinders	**RS8.UA/1L**	universal sensor N.O. with LED for in series assembling (3wires) and M8 plug
Rodless cylinders	**SRS8.UA/1L**	universal sensor N.O. with LED for in series assembling (3wires) and M8 plug
Cable	**MCH1**	M8 connector with 2.5 m. cable 3 wires (PUR Ø2.6 mm 3x 0.15 mm^2)
	MCH2	M8 connector with 5 m. cable 3 wires (PUR Ø2.6 mm 3x 0.15 mm^2)
	MCH3	M8 connector with 10 m. cable 3 wires (PUR Ø2.6 mm 3x 0.15 mm^2)

For sensors according to IEC 947 Standard	For 3 wires SNAP & M8 sensors	For 2 wires SNAP sensors
Connection 2 wires 3 PIN	*Connection 3 wires 3 PIN*	*Connection 2 wires 2 PIN*

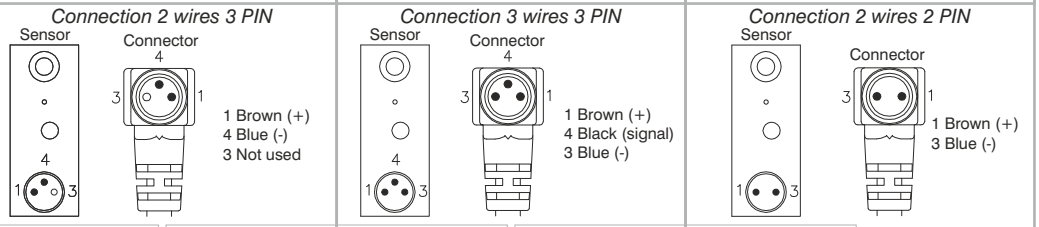

SNAP code connectors		M8 code connectors		SNAP code connectors		M8 code connectors		SNAP code connectors	
C1NO	Ø 3.5 mm	MC1	Ø 2.6 mm	CH1	Ø 3.5 mm	MCH1	Ø 2.6 mm	C1	Ø 3.5 mm
C2NO	PVC	MC2	PUR	CH2	PVC	MCH2	PUR	C2	PVC
C3NO	2x 0.25 mm^2	MC3	2x 0.15 mm^2	CH3	3x 0.25 mm^2	MCH3	3x 0.15 mm^2	C3	2x 0.25 mm^2

Technical characteristics	DC	UA				UA/1L		UA/1	
		a.c.		d.c.		a.c.	d.c.	a.c.	d.c.
Type of contact	N.O.	N.O.	N.C.	N.O.	N.C.	N.O.		N.O.	
Maximum permanent current	1.2A	0.5A	0.3A	0.5A	0.3A	0.5A		0.5A	
Maximum current (pulses of 0.5 sec.)	1.5A	1A	0.8A	1A	0.8A	1A		1A	
Voltage range	12 - 30V	3 - 250V	3 - 110V	12 - 48V		24V		0 - 250V	0 - 48V
Maximum permanent power	32W	20VA	10VA	15W	8W	20VA	15W	10VA	8W
Working temperature	-20°C - 70°C								
Maximum voltage drop	2V	<3V				0V			
Cables number	2					3		2	
Degree of protection	IP65								
Connecting time	2 ms								
Disconnecting time	1 ms								
Average working period	10^7 cicles								
Repetition of intervention point	±0.1 mm								

Diagrams and connections

Type - UA

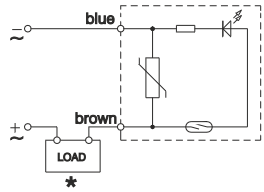

Type UA/1

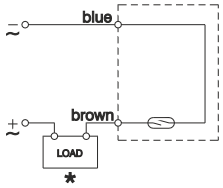

Type - UA/1L

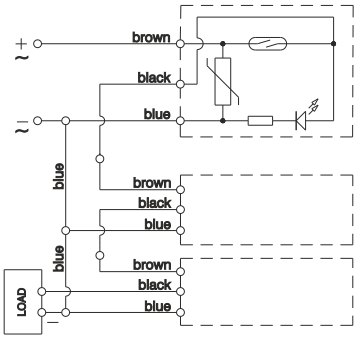

Type - DC

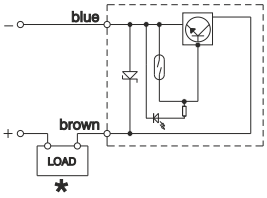

Type - DCNO

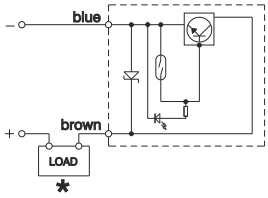

Type - UC

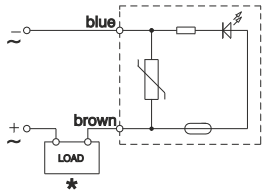

***The load (LOAD) can be connected either to negative or positive pole.**

These sensors can be used on cylinders series:

SERIES	DESCRIPTION	MOUNTED
1200	for microcylinders with threaded end covers and “TECNO-MIR” microcylinders	with clamps code 1260.Ø.F
	for microcylinders "MIR" with rolled end covers, cylinders from Ø16 to Ø32	with clamps code 1280.Ø.F
	for microcylinders "MIR-INOX" with rolled end covers	with clamps code 1280.Ø.FX
1306 - 1307 - 1308	for cylinders from Ø32 to Ø63	with brackets code 1306.A
	for cylinders from Ø80 to Ø125	with brackets code 1306.B
	for cylinders from Ø160 to Ø200	with brackets code 1306.C
1315	for cylinders Ø250 and Ø320 (ISO)	with brackets code 1306.D
1319 - 1320	for cylinders Ø32 and Ø40	with brackets code 1320.A
	for cylinders Ø50 and Ø63	with brackets code 1320.B
	for cylinders Ø80 and Ø100	with brackets code 1320.C
	for cylinders Ø125	with brackets code 1320.D
	for cylinders Ø160	with brackets code 1320.E
	for cylinders Ø200	with brackets code 1320.F
1390 - 1391	for cylinders ECOLIGHT Ø32 and Ø40	with brackets code 1390.A
	for cylinders ECOLIGHT Ø50 and Ø63	with brackets code 1390.B
	for cylinders ECOLIGHT Ø80 and Ø100	with brackets code 1390.C
	for cylinders ECOLIGHT Ø125 - Ø200	with brackets code 1390.D
1500	Compact cylinders "Europe" (from Ø32)	directly on groove
1605	Rodless cylinders	with brackets code 1600.A

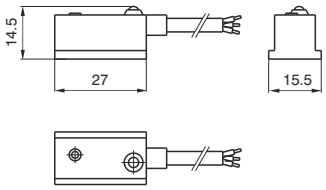

Slot detail
type "A"

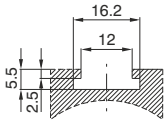

for cylinders and microcylinders

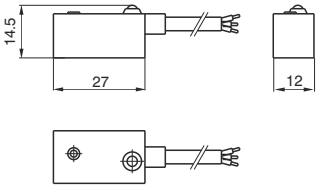

for rodless cylinders

Ordering code

SENSORS WITH 3 WIRES CABLE (PUR Ø 4.2 mm 3x0.34mm²)

Cylinders and microcylinders	**1500.HAP**	PNP sensor Hall effect with led, normally open N.O.
	1500.HAN	NPN sensor Hall effect with led, normally open N.O.
Rodless cylinders	**1600.HAP**	PNP sensor Hall effect with led, normally open N.O.
	1600.HAN	NPN sensor Hall effect with led, normally open N.O.

Technical characteristics

Maximum permanent current	0.5A
Voltage range	10 - 30V DC
Power (inductive load)	10W
Maximum voltage drop	2V
Working temperature	-20°C - 70°C
Cable section	PUR 4.2mm 3x0.34 mm²
Degree of protection	IP 65
Connecting time	0.8 µs
Disconnecting time	0.3 µs
Average working period	10⁹ cicles
Repetition of intervention point	± 0.1 mm
Type of contact	N.O.

Diagrams and connections

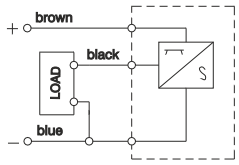

PNP

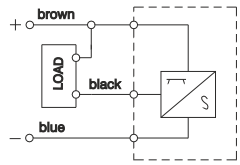

NPN

These sensors can be used on cylinders series:

SERIES	DESCRIPTION	MOUNTED
1200	for microcylinders with threaded end covers and "TECNO-MIR" microcylinders	with clamps code 1260.Ø.F
	for microcylinders "MIR" with rolled end covers, cylinders from Ø16 to Ø32	with clamps code 1280.Ø.F
	for microcylinders "MIR-INOX" with rolled end covers	with clamps code 1280.Ø.FX
1306 - 1307 - 1308	for cylinders from Ø32 to Ø63	with brackets code 1306.A
	for cylinders from Ø80 to Ø125	with brackets code 1306.B
	for cylinders from Ø160 to Ø200	with brackets code 1306.C
1315	for cylinders Ø250 and Ø320 (ISO)	with brackets code 1306.D
1319 - 1320	for cylinders Ø32 and Ø40	with brackets code 1320.A
	for cylinders Ø50 and Ø63	with brackets code 1320.B
	for cylinders Ø80 and Ø100	with brackets code 1320.C
	for cylinders Ø125	with brackets code 1320.D
	for cylinders Ø160	with brackets code 1320.E
	for cylinders Ø200	with brackets code 1320.F
1390 - 1391	for cylinders ECOLIGHT Ø32 and Ø40	with brackets code 1390.A
	for cylinders ECOLIGHT Ø50 and Ø63	with brackets code 1390.B
	for cylinders ECOLIGHT Ø80 and Ø100	with brackets code 1390.C
	for cylinders ECOLIGHT Ø125 - Ø200	with brackets code 1390.D
1500	Compact cylinders "Europe" (from Ø32)	directly on groove
1605	Rodless cylinders	with brackets code 1600.A

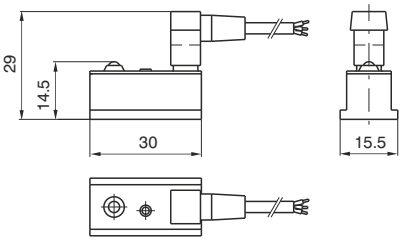

for cylinders and microcylinders

Slot detail type "A"

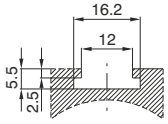

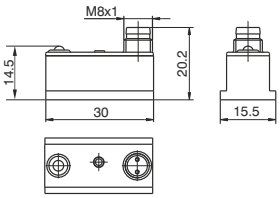

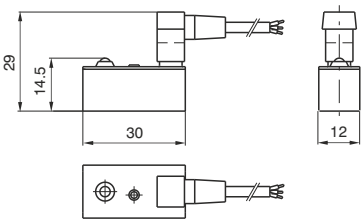

for rodless cylinders

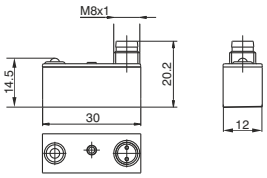

Ordering code

3 PIN SENSOR FOR SNAP CONNECTOR

Cylinders and microcylinders	**HS.PA**	PNP sensor Hall effect with led, normally open N.O.
Rodless cylinders	**SHS.PA**	PNP sensor Hall effect with led, normally open N.O.
Cable	**CH1**	connector with 2.5 m. cable 3 wires (PVC Ø3.5 mm 3x0.25 mm^2)
	CH2	connector with 5 m. cable 3 wires (PVC Ø3.5 mm 3x0.25 mm^2)
	CH3	connector with 10 m. cable 3 wires (PVC Ø3.5 mm 3x0.25 mm^2)

3 PIN SENSOR FOR SNAP CONNECTOR + CH1 CABLE 3 WIRES (PVC Ø3.5 mm 3x0.25 mm^2)

Cylinders and microcylinders	**HS.PAC1**	PNP sensor Hall effect N.O. with led, with connector and 2.5 m. cable
Rodless cylinders	**SHS.PAC1**	PNP sensor Hall effect N.O. with led, with connector and 2.5 m. cable

3 PIN SENSOR FOR M8 CONNECTOR

Cylinders and microcylinders	**HS8.NA**	NPN Hall effect sensor N.O. with LED and M8 plug
	HS8.PA	PNP Hall effect sensor N.O. with LED and M8 plug
Rodless cylinders	**SHS8.NA**	NPN Hall effect sensor N.O. with LED and M8 plug
	SHS8.PA	PNP Hall effect sensor N.O. with LED and M8 plug
Cable	**MCH1**	M8 connector with cable 2.5 m. 3 wires (PUR Ø2.6 mm 3x0.15mm^2)
	MCH2	M8 connector with cable 5 m. 3 wires (PUR Ø2.6 mm 3x0.15mm^2)
	MCH3	M8 connector with cable 10 m. 3 wires (PUR Ø2.6 mm 3x0.15mm^2)

For 3 wires
SNAP & M8 sensors

Connection 3 wires 3 PIN

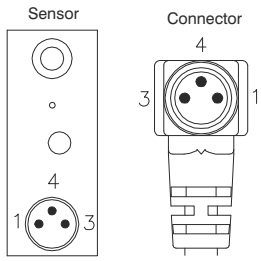

SNAP code connectors	
CH1	Ø 3.5 mm
CH2	PVC
CH3	3x 0.25 mm^2

M8 code connectors	
MCH1	Ø 2.6 mm
MCH2	PUR
MCH3	3x 0.15 mm^2

Technical characteristic

Maximum permanent current	0,25A
Voltage range	6 - 30V DC
Power (inductive load)	6W
Maximum Voltage drop	2V
Working temperature	-20°C - 70°C
Cables number	3
Degree of protection	IP 65
Connecting time	0,8 ms
Disconnecting time	0,3 ms
Average working period	10^9 cicles
Repetition of intervention point	± 0,1 mm
Contact normally open	N.O.

Diagrams and connections

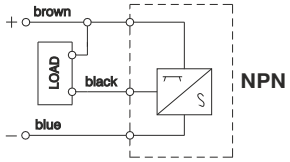

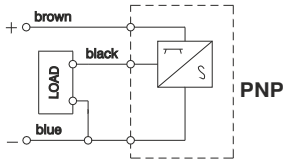

These sensors can be used on cylinders series:

SERIES	DESCRIPTION	MOUNTED
1200	for microcylinders with threaded end covers and “TECNO-MIR” microcylinders	with clamps code 1260.Ø.F
	for microcylinders "MIR" with rolled end covers, cylinders from Ø16 to Ø32	with clamps code 1280.Ø.F
	for microcylinders "MIR-INOX" with rolled end covers	with clamps code 1280.Ø.FX
1306 - 1307 - 1308	for cylinders from Ø32 to Ø63	with brackets code 1306.A
	for cylinders from Ø80 to Ø125	with brackets code 1306.B
	for cylinders from Ø160 to Ø200	with brackets code 1306.C
1315	for cylinders Ø250 and Ø320 (ISO)	with brackets code 1306.D
1319 - 1320	for cylinders Ø32 and Ø40	with brackets code 1320.A
	for cylinders Ø50 and Ø63	with brackets code 1320.B
	for cylinders Ø80 and Ø100	with brackets code 1320.C
	for cylinders Ø125	with brackets code 1320.D
	for cylinders Ø160	with brackets code 1320.E
	for cylinders Ø200	with brackets code 1320.F
1390 - 1391	for cylinders ECOLIGHT Ø32 and Ø40	with brackets code 1390.A
	for cylinders ECOLIGHT Ø50 and Ø63	with brackets code 1390.B
	for cylinders ECOLIGHT Ø80 and Ø100	with brackets code 1390.C
	for cylinders ECOLIGHT Ø125 - Ø200	with brackets code 1390.D
1500	Compact cylinders "Europe" (from Ø32)	directly on groove
1605	Rodless cylinders	with brackets code 1600.A

General

The limit switches, or magnetic sensors, have to be mounted on cylinders with magnetic piston. These, when hit by the magnetic field generated by the piston as it approaches, close the circuit sending an electrical signal by relè solenoid valve control, etc. or converse with the controlling electronic system situaded on the machine. There are available magnetic sensor with ampulla Reed type and with Hall effect. The sensors are attached to the cylinder by a proper clamp, slot or adaptator and have an activation LED indicator.

Note: The magnetic sensors are according to the Directive **EMC 89**/**336**/**CEE** and following amendments.

Instruction on how to use the sensors properly

Particular attention should be paid in order not to exceed the wide operating limits shown into the next pages. Besides, the 2 wires sensors have never to be connected to the mains if a load has not been yet connected in series.These are the only cares that, if not followed, may cause damages to the sensor. Furthermore it has to be considered that, while loading, the current absorbed by the sensors might be 50% higher that the rated one. The switch semiconductor construction design makes this sensors extremely compatible, there are no limitation to the type of load applied : inductive, capacitive resistive. In case of direct current (DC) feeding, the polarity of the connection has to be observed: the brown cable must be connected to the plus (+) and the blue one to the minus (-). The cable length must not exceed 10mtrs. If the cable needs to be longer then 10 mt, we recommend to insert in series an inductance or a resistance to counteract the capacity generated by the cable itself. When using a two wire REED type sensor always ensure that the correct load is applied in series on any of the two wires. In case of two or more sensors connected in series pay attention to tension drop generated (around 3V for each sensor), and eventually use the 3 wire REED version designed for in series connection. The Hall effect sensors, which do not include any moving mechanical parts are longer lasting if compared to the Reed version besides, there are some other external factors to be taken into consideration, such as proximity of powered cables, magnetic fields produced by electric motors, mass of iron too close to the sensor, and so on: these factors have to be therefore carefully avoided, being able to influence the sensors and accordingly to cause irregularity of operation.

Sensor with 2.5 m. cable

Weight gr. 27

Sensor with cable and M8 connector

Weight gr. 15

X= point of commutation

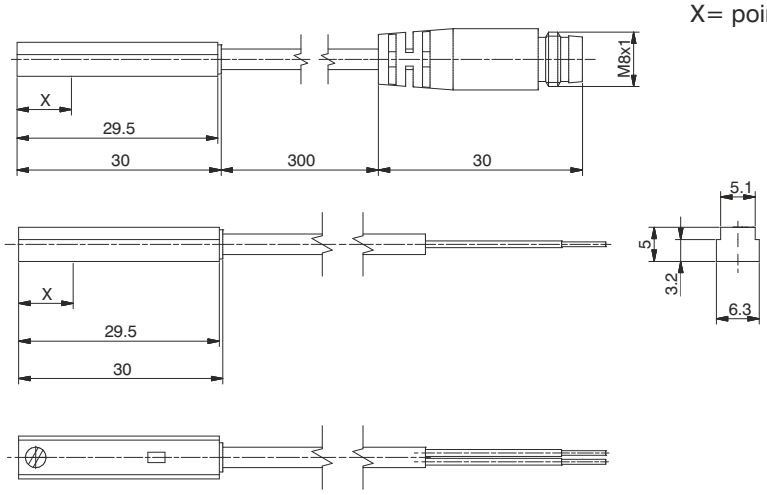

Sensor ordering codes

Ampulla Reed sensors, with led, Universal, N.O. (Normally open)		X=point of commutation
1580.U	(2 wires) cable 2.5 mt.	15 mm
MRS.U	(2 wires) cable 300 mm, M8 connector (use MC1 or MC2 connectors)	15 mm
1580.UAP	PNP (3 wires) cable 2.5 mt.	15 mm
MRS.UAP	PNP (3 wires) cable 300 mm, M8 connector (use MCH1 or MCH2 connectors)	15 mm

Hall effect sensors, with led, DC, N.O. (Normally open)		X=point of commutation
1580.HAP	PNP (3 wires) cable 2.5 mt.	8 mm
1580.HAN	NPN (3 wires) cable 2.5 mt.	8 mm
MHS.P	PNP (3 wires) cable 300 mm, M8 connector (use MCH1 or MCH2 connectors)	8 mm

Diagrams and connections

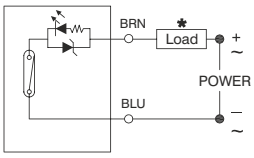

with Reed bulb (2 wires)

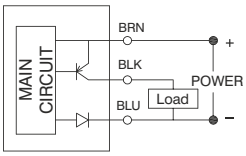

Hall-PNP effect (3 wires)

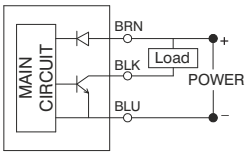

Hall-NPN effect (3 wires)

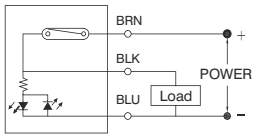

with Reed bulb (3 wires)

*** The load (LOAD) can be connected either to negative or positive pole**

Technical characteristics	1580.U	MRS.U	1580.UAP	MRS.UAP	1580.HAP	1580.HAN	MHS.P
Type of contact	N.O.						
Output type			PNP			NPN	PNP
Maximum current	100mA						
Maximum permanent power	14 VA - 10 W		4 VA - 3 W		3 W		
Voltage range	5 - 230V DC/AC	5 - 30V DC/AC	10 - 30 V DC/AC		10 - 30 V DC		
Working temperature	-10°C - +70°C						
Maximum voltage drop	3.5 V		0V **		2 V		
Cable section (mm²)	2 x 0.14 Ø3.3mm PUR	2 x 0.14 Ø3.3mm PUR	3 x 0.14 Ø3.3 mm PUR		3 x 0.14 Ø3.3 mm PUR		
Degree of protection	IP 67						

**** Even if one sensor generates a voltage drop very close to 0 Volts, we suggest to connect no more than 30 sensors in series.**

Cable ordering code

MC1	cable 2 wires l=2.5m with M8 connector
MC2	cable 2 wires l=5m with M8 connector
MC3	cable 2 wires l=10m with M8 connector

Connection 2 wires

Connector

Sensor

1 Brown (+)
4 Blue (-)
3 Not use

MCH1	cable 3 wires l=2.5m with M8 connector
MCH2	cable 3 wires l=5m with M8 connector
MCH3	cable 3 wires l=10m with M8 connector

Connection 3 wires

Connector

Sensor

1 Brown (+)
4 Black (signal)
3 Blue (-)

Sensor with 2.5 m. cable

X= point of commutation

Weight gr. 23

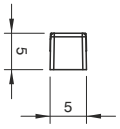

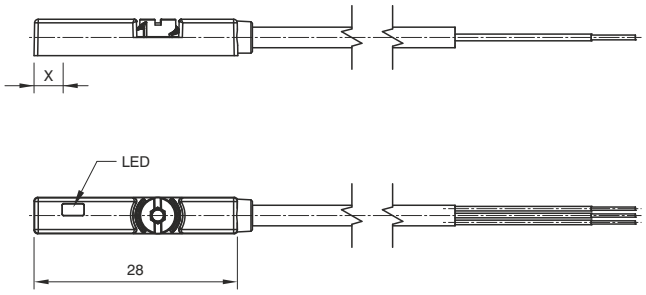

Slot detail type "B"

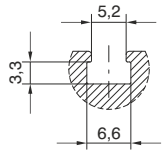

Sensor ordering codes

Hall effect sensors, with led, DC, N.O. (Normally open)		X= point of commutation
1595.HAP	PNP (3 wires) cable 2.5 mt.	2.3 mm

Diagrams and connections

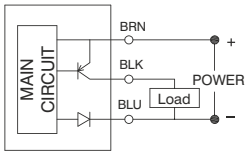

Hall-PNP effect (3 wires)

Technical characteristics	1595.HAP
Type of contact	N.O.
Output type	PNP
Maximum current	100 mA
Maximum permanent power	3W
Voltage range	10 - 28 VDC
Working temperature	-10 - +70°C
Maximum voltage drop	1,5V
Cable section (mm^2)	3 x 0,14 Ø2.8 mm PUR
Degree of protection	IP67

Sensor with 2.5 m. cable

Weight gr. 27

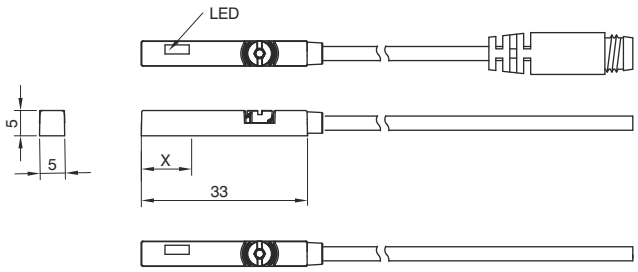

Slot detail type "B"

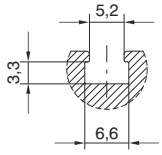

Sensor with cable and M8 connector

Weight gr. 15

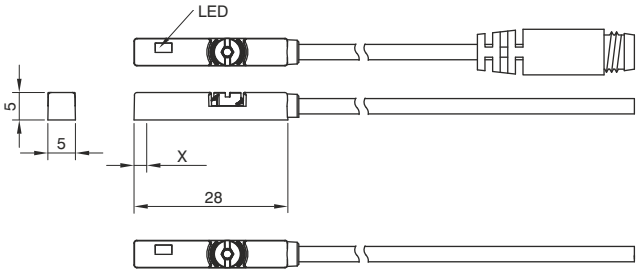

Sensor ordering codes

Ampulla Reed sensors, with led, Universal, N.O. (Normally open)			X=point of commutation
1590.U		(2 wires) cable 2.5 mt.	10 mm
LRS.U		(2 wires) cable 300 mm, M8 connector (use MC1 or MC2 connectors)	10 mm
1590.UAP	PNP	(3 wires) cable 2.5 mt.	10 mm
LRS.UAP	PNP	(3 wires) cable 300 mm, M8 connector (use MCH1 or MCH2 connectors)	10 mm

Hall effect sensors, with led, DC, N.O. (Normally open)			X=point of commutation
1590.HAP	PNP	(3 wires) cable 2.5 mt.	2,3 mm
LHS.P	PNP	(3 wires) cable 300 mm, M8 connector (use MCH1 or MCH2 connectors)	2,3 mm

Diagrams and connections

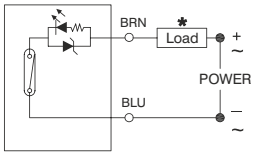

with Reed bulb (2 wires)

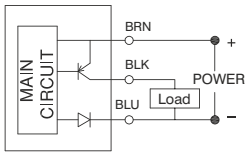

Hall-PNP effect (3 wires)

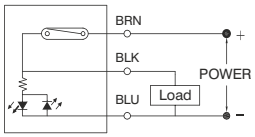

with Reed bulb (3 wires)

*** The load (LOAD) can be connected either to negative or positive pole**

Technical characteristics	**1590.U**	**LRS.U**	**1590.UAP**	**LRS.UAP**	**1590.HAP**	**LHS.P**
Type of contact	N.O.					
Maximum current	100mA		500mA		200mA	
Maximum permanent power	14 VA - 10 W		14 VA - 10 W		6 W	
Voltage range	5 - 240V DC/AC		10 - 30 V DC/AC		10 - 28 V DC	
Working temperature	-10°C - +70°C					
Maximum voltage drop	3 V		0V **		1.5 V	
Cable section (mm^2)	2 x 0.14 Ø2,8 mm PUR		3 x 0.14 Ø2,8 mm PUR			
Degree of protection	IP 67					

****Even if one sensor generates a voltage drop very close to 0 Volts, we suggest to connect no more than 30 sensors in series.**

Cable ordering code

MC1	cable 2 wires l=2.5m with M8 connector
MC2	cable 2 wires l=5m with M8 connector
MC3	cable 2 wires l=10m with M8 connector

Connection 2 wires

1 Brown (+)
4 Blue (-)
3 Not use

MCH1	cable 3 wires l=2.5m with M8 connector
MCH2	cable 3 wires l=5m with M8 connector
MCH3	cable 3 wires l=10m with M8 connector

Connection 3 wires

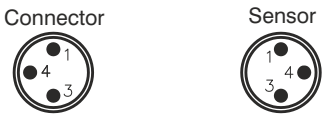

1 Brown (+)
4 Black (signal)
3 Blue (-)

Sensor with 2.5 m. cable

Weight gr. 22

Sensor with cable and M8 connector

Weight gr. 10

X= point of commutation

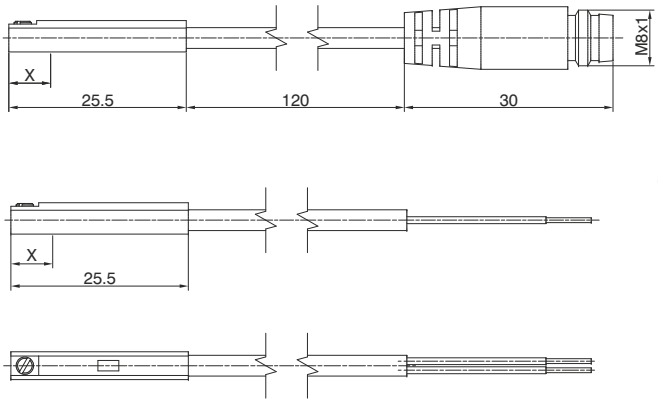

Slot detail type "C"

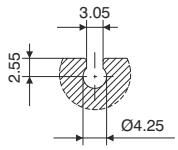

Slot detail type "D"

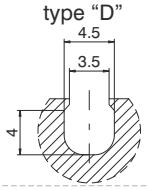

Sensor ordering codes

Ampulla Reed sensors, with led, Universal, N.O. (Normally open)		X=point of commutation
1581.U	(2 wires) cable 2.5 mt.	10 mm
TRS.U	(2 wires) cable 100 mm, M8 connector (use MC1 or MC2 connectors)	10 mm

Hall effect sensors, with led, DC, N.O. (Normally open)		X=point of commutation
1581.HAP	PNP (3 wires) cable 2.5 mt.	7.5 mm
THS.P	PNP (3 wires) cable 100 mm, M8 connector (use MCH1 or MCH2 connectors)	7.5 mm

Diagrams and connections

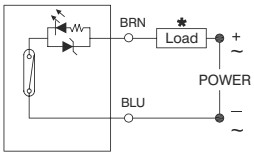

with Reed bulb (2 wires)

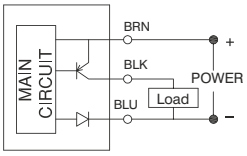

Hall-PNP effect (3 wires)

*** The load (LOAD) can be connected either to negative or positive pole**

Technical characteristics	**1581.U**	**TRS.U**	**1581.HAP**	**THS.P**
Type of contact	N.O.			
Maximum current	50mA			
Maximum permanent power	8 VA - 1,5 W		1,5 W	
Voltage range	5 - 30V DC/AC		10 - 30 V DC	
Working temperature	-10°C - +70°C			
Maximum voltage drop	3,5 V		1 V	
Cable section (mm^2)	2 x 0,14 Ø2,8 mm PUR		3 x 0,14 Ø2,8 mm PUR	
Degree of protection	IP 67			

Cable ordering code

MC1	cable 2 wires l=2.5m with M8 connector
MC2	cable 2 wires l=5m with M8 connector
MC3	cable 2 wires l=10m with M8 connector

Connection 2 wires

Connector

Sensor

1 Brown (+)
4 Blue (-)
3 Not use

MCH1	cable 3 wires l=2.5m with M8 connector
MCH2	cable 3 wires l=5m with M8 connector
MCH3	cable 3 wires l=10m with M8 connector

Connection 3 wires

Connector

Sensor

1 Brown (+)
4 Black (signal)
3 Blue (-)

Sensor with cable

Weight gr. 22

Sensor with cable and M8 connector

Weight gr. 10

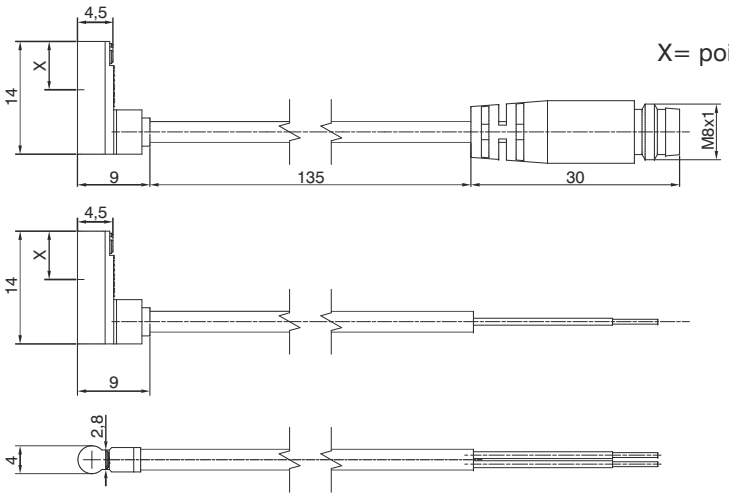

X= point of commutation

Slot detail type "C"

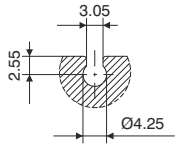

Slot detail type "D"

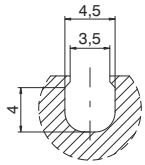

Sensor ordering codes

Ampulla Reed sensors, with led, DC, N.O. (Normally open)		X=point of commutation
1583.DC	(2 wires) cable 2 mt.	6 mm

Hall effect sensors, with led, N.O. (Normally open)		X=point of commutation
1583.HAP	PNP (3 wires) cable 3 mt.	6 mm
THR.P	PNP (3 wires) cable 100 mm, M8 connector (use MCH1 or MCH2 connectors)	6 mm

Diagrams and connections

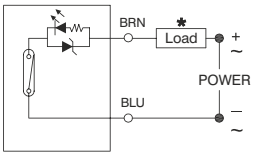

with Reed bulb (2 wires)

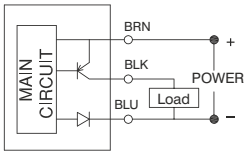

Hall-PNP effect (3 wires)

*** The load (LOAD) can be connected either to negative or positive pole**

TECHNICAL CHARACTERISTICS	1583.DC	1583.HAP	THR.P
Type of contact	N.O.		
Maximum current	20mA	50mA	
Maximum permanent power	0,6 W	1,5 W	
Voltage range	10 - 28V DC	4,5 - 28 V DC	
Working temperature	-10°C - +70°C		
Maximum voltage drop	3,5 V	0,5 V	
Cable	Ø2,6 mm PVC - 2 m	Ø2,6 mm PVC - 3 m	
Degree of protection	IP 67		

Cable ordering code

MCH1 cable 3 wires l=2.5m with M8 connector
MCH2 cable 3 wires l=5m with M8 connector

Connection 3 wires

Connector

Sensor

1 Brown (+)
4 Black (signal)
3 Blue (-)

6

Rectangular section version (for sensor slot type “B”)

SERIES	DESCRIPTION	MOUNTED
1200	Microcylinders with threaded end covers and “TECNO-MIR” microcylinders	with clamps code 1260.Ø.FS
	Microcylinders "MIR" with rolled end covers	with clamps code 1280.Ø.FS
	Microcylinders "MIR-INOX" with rolled end covers	with clamps code1280.Ø.FSX
1319 - 1320 **1325 - 1345** **1330 - 1332** **1348 - 1349**	for cylinders Ø32 - Ø40	with brackets code 1320.AS
	for cylinders Ø50 - Ø63	with brackets code 1320.BS
	for cylinders Ø80 - Ø100	with brackets code 1320.CS
	for cylinders Ø125	with brackets code 1320.DSC
	for cylinders Ø160	with brackets code 1320.ESC
	for cylinders Ø200	with brackets code 1320.FSC
1386-87 / 1396-97	Cylinders according to standard ISO 15552 ECOPLUS	directly on groove
1390 - 1391	Cylinders according to standard ISO 15552 ECOLIGHT **Warning**: To use only into the lateral slot, from Ø32 to Ø63 cylinders. (do not use into the 2 slots positioned on the side of feeding connection)	directly on groove
1370-1373	Cylinders ECOFLAT	directly on groove
1500	Short stroke compact cylinders	with adapter code 1380.01F
	Compact cylinders "Europe"	from Ø12 to Ø25: directly on groove from Ø32 to Ø50: directly on groove or with adapter 1380.01F from Ø63 to Ø100: with adapter cod. 1380.01F
	Compact cylinder according to standard ISO 21287 ECOMPACT	directly on groove
1605	Rodless cylinders	with adapter code 1600.B
6100	Guided compact cylinder (Ø20 - Ø63)	directly on groove
6101	Heavy duty guided shortstroke cylinder	
6200	Twin rod slides units	
6210	Push/pull twin rod slides units	
6301	Pneumatic grippers, angular standard version	
6303	180° angular gripper rack & pinion style	
6310	Parallel style pneumatic grippers standard version (Ø10)	
6311	Parallel style pneumatic grippers wide opening	
6312	3 finger parallel style pneumatic grippers (Ø32 - Ø125)	

Rectangular section version (for sensor slot type “B”)

SERIES	DESCRIPTION	MOUNTED
1200	Microcylinders with threaded end covers and “TECNO-MIR” microcylinders	with clamps code 1260.Ø.FS
	Microcylinders "MIR" with rolled end covers	with clamps code 1280.Ø.FS
	Microcylinders "MIR-INOX" with rolled end covers	with clamps code 1280.Ø.FSX
1319 - 1320 **1325 - 1345** **1330 - 1332** **1348 - 1349**	for cylinders Ø32 - Ø40	with brackets code 1320.ASC
	for cylinders Ø50 - Ø63	with brackets code 1320.BSC
	for cylinders Ø80 - Ø100	with brackets code 1320.CSC
	for cylinders Ø125	with brackets code 1320.DSC
	for cylinders Ø160	with brackets code 1320.ESC
	for cylinders Ø200	with brackets code 1320.FSC
1386-87 / 1396-97	Cylinders according to standard ISO 15552 ECOPLUS	directly on groove
1390 - 1391	Cylinders according to standard ISO 15552 ECOLIGHT	directly on groove
1370-1373	Cylinders ECOFLAT	directly on groove
1500	Short stroke compact cylinders	with adapter code 1380.01F
	Compact cylinders "Europe"	from Ø12 to Ø25: directly on groove from Ø32 to Ø50: directly on groove or with adapter 1380.01F from Ø63 to Ø100: with adapter cod. 1380.01F
	Compact cylinder according to standard ISO 21287 ECOMPACT	directly on groove
1605	Rodless cylinders	with adapter code 1600.B
6100	Guided compact cylinder (Ø20 - Ø63)	directly on groove
6101	Heavy duty guided shortstroke cylinder	
6200	Twin rod slides units	
6210	Push/pull twin rod slides units	
6311	Parallel style pneumatic grippers wide opening	

Oval section version (for sensor slot type “B”)

SERIES	DESCRIPTION	MOUNTED
1386-87 / 1396-97	Cylinders according to standard ISO 15552 ECOPLUS	directly on groove
1390-1391	Cylinders according to standard ISO 15552 ECOLIGHT	directly on groove
1370-1373	Cylinders ECOFLAT	directly on groove
1500	Compact cylinders "Europe"	from Ø12 to Ø25: directly on groove
	Compact cylinder according to standard ISO 21287 ECOMPACT	directly on groove
6100	Guided compact cylinder (Ø20 - Ø63)	directly on groove
6101	Heavy duty guided shortstroke cylinder	
6200	Twin rod slides units	
6210	Push/pull twin rod slides units	
6301	Pneumatic grippers, angular standard version	
6303	180° angular gripper rack & pinion style	
6310	Parallel style pneumatic grippers standard version (Ø10)	
6311	Parallel style pneumatic grippers wide opening	
6312	3 finger parallel style pneumatic grippers (Ø32 - Ø125)	
6411	Single rack rotary actuators	

Round section version (for sensor slot type “C” and “D”)

SERIES	DESCRIPTION	MOUNTED
6100	Guided compact cylinder (Ø12 - Ø16)	directly on groove
6302	Pneumatic grippers, 180 °angular	
6310	Parallel style pneumatic grippers standard version (Ø10 and Ø16)	
6312	3 finger parallel style pneumatic grippers (Ø16 - Ø25)	
6400	Double rack rotary actuators with turn table	
6420	Vane type rotary actuators (from Ø10 to Ø40)	
6500	Arbitrary mount cylinders	
6600	Slide cylinders	
6700	Guide cylinders	

Round section 90° cable version (for sensor slot type “C” and “D”)

SERIES	DESCRIPTION	MOUNTED
6420	Vane type rotary actuators	directly on groove

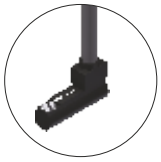

Chapter 4

Chapter 5

Chapter 6

PNEUMAX S.p.A.
24050 Lurano (BG) - Italia
Via Cascina Barbellina, 10

Tel 035 4192777
Fax 035 4192740
035 4192741

info@pneumaxspa.com
www.pneumaxspa.com

D. CAT. GEN/GB - 04/2007
PRINTED IN ITALY - 10/2018 (F)

PNEUMAX ®